# *Most-Often-Needed*

# 1967-1969

Volume R-27

# RADIO DIAGRAMS

## *and Servicing Information*

**Compiled by**

Hartford Beitman

**SUPREME PUBLICATIONS**

# SUPREME TV & Radio Manuals

## ORDER FORM


### SIMPLIFIES TV REPAIRS

These giant TV manuals have complete circuits, needed alignment facts, printed boards, servicing hints, production changes, voltage charts, waveforms, and double-page schematics. Here are your authentic service instructions to help you do expert work quicker; and priced at only $3 per large annual manual.

### COVER ALL POPULAR SETS

Here is your service data for faster, easier TV repairs. Lowest priced. Best by comparison. *Supreme* **TV** manuals have all needed service material on every popular TV set. Helpful, practical, factory-prepared data that will really make TV servicing easy for you. Benefit and save with these amazing values in service manuals. Only $3 per large volume. Used by 184,000 wise servicemen for faster repairs. Join them; begin to make TV repairs easily and quickly.


### RADIO DIAGRAMS

Your best source for all needed RADIO diagrams and service data. Covers everything from most recent 1966 radios to pre-war old-timers; home radios, stereo, combinations, transistor portables, FM, auto sets. Only $2.50 for many volumes. Every manual has large schematics, all needed alignment facts, printed boards, voltages, trimmers, dial stringing, and hints. Volumes are big, 8½x11 inches, about 190 pages. See coupon at right for list of SUPREME popular radio service manuals ►

### Simplified Radio Servicing by COMPARISON Method


Revolutionary different **COMPARISON** technique permits you to do expert work on all radio sets. Most repairs can be made without test equipment or with only a volt-ohmmeter. Many simple, point-to-point, cross-reference, circuit suggestions locate the faults instantly. Plan copyrighted. Covers every radio set — new and old models. This new servicing technique presented in handy manual form, size 8½ x 11 inches, 48 pages. Over 1,000 practical service hints. 26 large, trouble-shooting blueprints. Charts for circuit analysis. 114 tests using a 5c resistor. Developed by M. N. Beitman. New edition. Price only..... **$1.50**


### TELEVISION SERVICING COURSE

Let this new course help you in TV servicing. Amazing bargain complete, only $3, full price for all lessons. Giant in size, mammoth in scope, topics just like a $200.00 correspondence course. Lessons on picture faults, circuits, adjustments, short-cuts, UHF, alignment facts, hints, antenna problems, trouble-shooting, test equipment, picture analysis. Special, only **$3**


### RADIO MATHEMATICS

Explains arithmetic and simple algebra in connection with units, color code, meter scales, Ohm's law, alternating currents, ohmmeter testing, wattage rating, series and parallel connections, capacity, inductance, mixed circuits, vacuum tubes, curves, the decibel, etc., and has numerous examples. Only ..... **25¢**

# *Supreme Publications*

***Sold by All Leading Parts Jobbers***

## SUPREME PUBLICATIONS

**1760 Balsam Rd., Highland Park, ILL.**

★ Ship immediately Radio and TV manuals in quantities marked below.

Most-Often-Needed TELEVISION Manuals @ $4

| QUANTITY | VOLUME #TV | YEAR COVERED |
|---|---|---|
| | TV-28 | 1969 |
| | TV-27 | 1968 |
| | TV-26 | 1967 |

Most-Often-Needed TELEVISION Manuals @ $3.

| | | |
|---|---|---|
| | TV-25 | 1966 |
| | TV-24 | Late 1965 |
| | TV-23 | Early 1965 |
| | TV-22 | 1964 |
| | TV-21 | 1963 |
| | TV-20 | Late 1962 |
| | TV-19 | Early 1962 |
| | TV-18 | 1961 |
| | TV-17 | 1960 |
| | TV-16 | Late 1959 |
| | TV-15 | Early 1959 |
| | TV-14 | 1958 |
| | TV-13 | Late 1957 |
| | TV-10 | Late 1955 |
| | TV-9 | Early 1955 |
| | TV-8 | 1954 |
| | TV-5 | 1951 |

Most-Often-Needed RADIO Manuals @ $2.50

| QUANTITY | VOLUME #R | YEAR COVERED |
|---|---|---|
| | R-26 | 1966 |
| | R-25 | 1965 |
| | 24 | 1964 |
| | 23 | 1963 |
| | 22 | 1962 |
| | 21 | 1961 |
| | 20 | 1960 |
| | 19 | 1959 |
| | 18 | 1958 |
| | 17 | 1957 |
| | 16 | 1956 |
| | 15 | 1955 |
| | 14 | 1954 |
| | 13 | 1953 |
| | 12 | 1952 |
| | 11 | 1951 |
| | 10 | 1950 |
| | 9 | 1949 |
| | 8 | 1948 |
| | 7 | 1947 |
| | 6 | 1946 |
| | 5 | 1942 |
| | 4 | 1941 |
| | 3 | 1940 |
| | 1 | 1926-1938 |

___Master INDEX to above manuals, 25¢

TRAINING BOOKS

___Auto Radio 1964-1965 Diagrams, $2.50
___Radio Servicing Course, new ed. 2.50
___Simplified Radio Servicing, 1.50
___Radio Mathematics (Self-help) .25
___Practical Radio & Electronics, 3.95
___Television Servicing Course, 3.00

☐ I am enclosing $..... Send postpaid.
☐ Send C.O.D. I am enclosing $...deposit.

Name: _____

Address: _____

_____

# Admiral

## 5E6 & 5E6A

CHASSIS

Models: YR503, YH713, YH717, YH723, YH727, YH731, YHC777, YHC793, YHC799, YHC801, YK803.

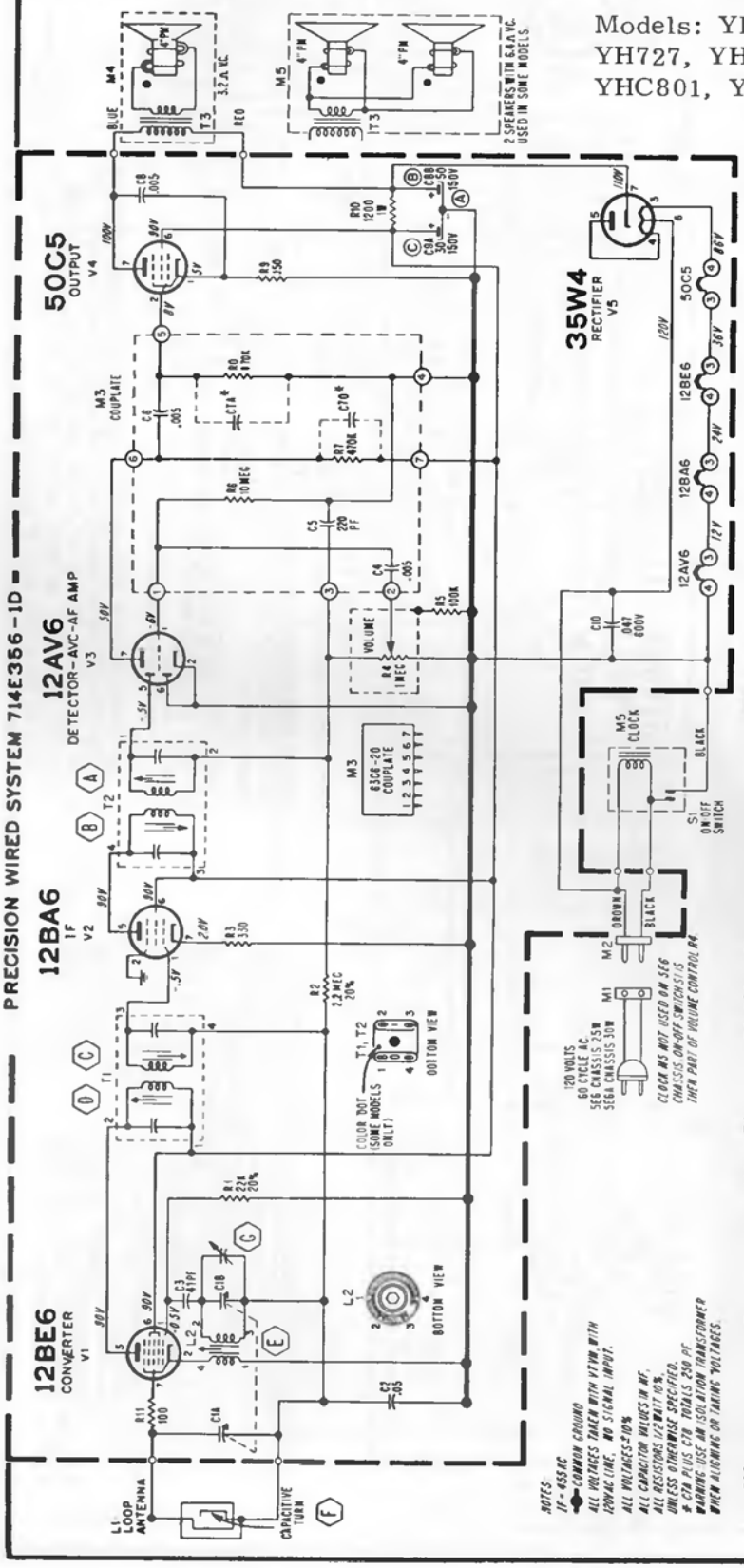


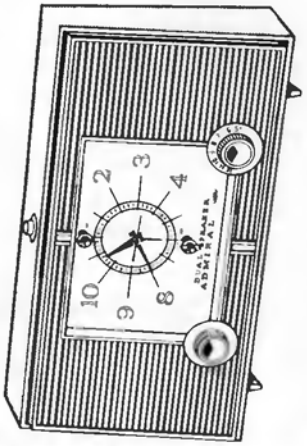


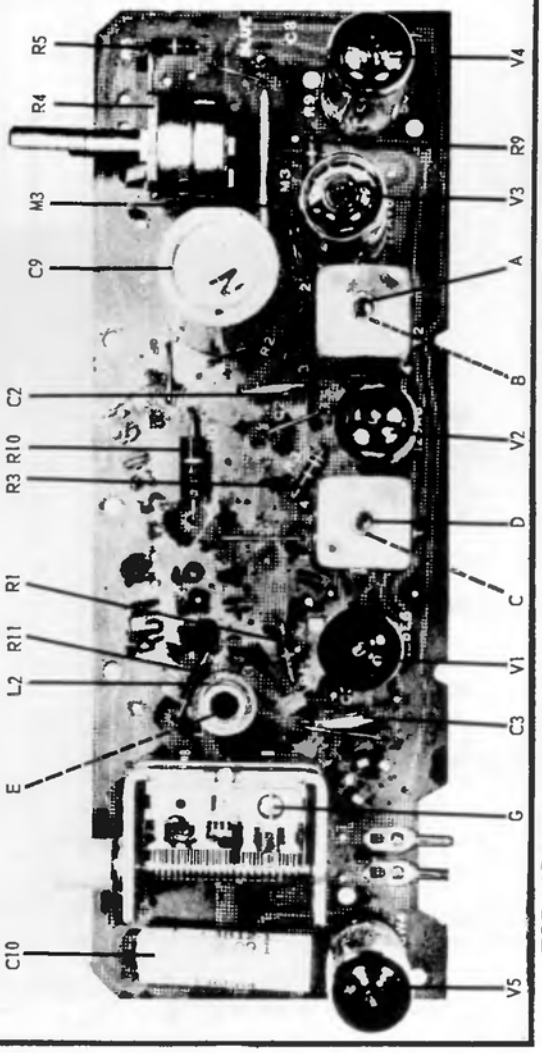


TOP VIEW OF CHASSIS SHOWING COMPONENTS AND ALIGNMENT POINTS

Note: Dashed (- - - -) lines indicate slug nearest chassis.

# Admiral CORPORATION

PWS 714D430-1

| MODEL CHART | | | |
|---|---|---|---|
| MODEL | NAME | COLOR | CHASSIS |
| YH203 | Varsity | White | 5A7 |
| YH207 | Varsity | Beige | |
| YH211 | Musicale | Walnut | |
| YHC223 | Mount Clair | White | 5A7A |
| YHC237 | Zephyr | Beige | |
| YHC243 | Coquette | White | |
| YHC247 | Coquette | Brown | |
| YHC251 | Marjorette | Walnut | |

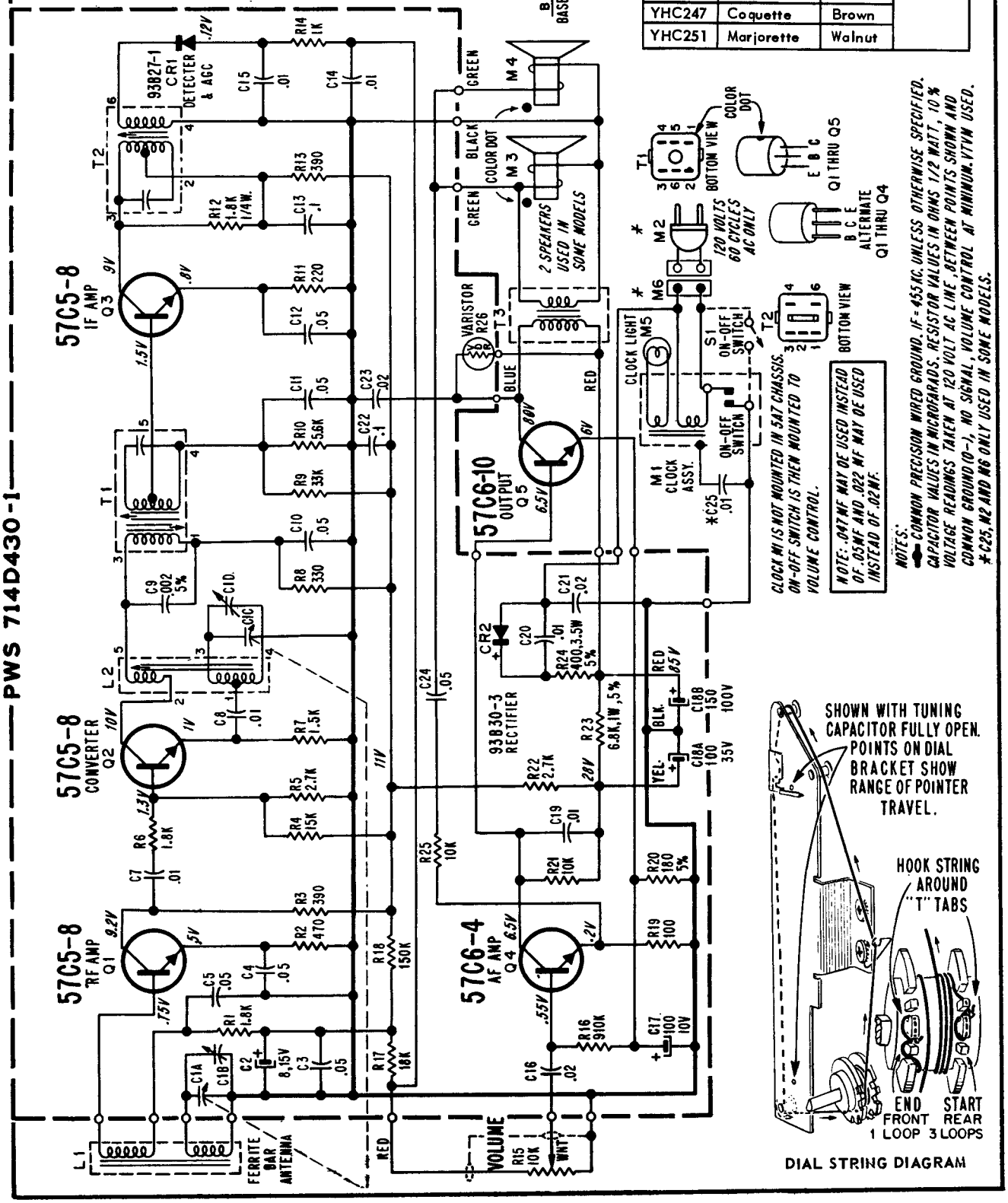

# Admiral

| MODEL CHART | | | | |
|---|---|---|---|---|
| MODEL | NAME | COLOR | CHANGER | CHASSIS |
| YHS1741 | Minstrel | Black | RC7W5S-67BB | 8M3 |
| YHS1771C | Virtuoso | Black | RC7W5S-67BB or RC7W5W-67BB | |

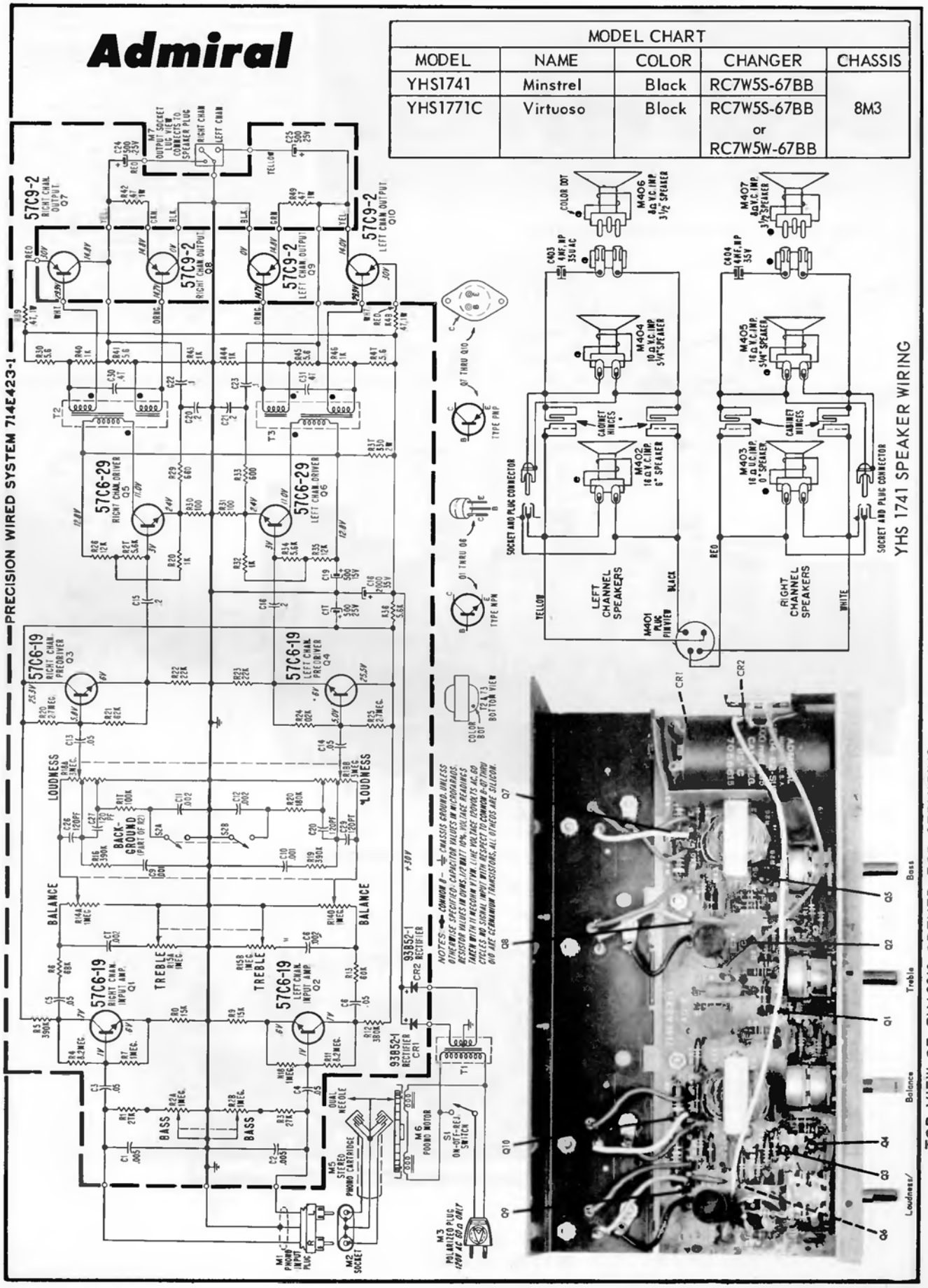

# Admiral®

| MODEL CHART | | | |
|---|---|---|---|
| MODEL | NAME | COLOR | CHASSIS |
| YH601 | Celestial | Black | 6M4 |
| YH607 | Celestial | Brown | |
| YH611 | Melodist | Walnut | |
| YH619 | Polonaise | Cherry | |
| YHC621 | Concerto | Black | 6M4A |
| YHC627 | Concerto | Brown | |
| YHC631 | Caprice | Walnut | |
| YHC641 | Reverie | Walnut | |
| YHC649 | Lullaby | Cherry | |

(See page 7 for schematic diagram.)

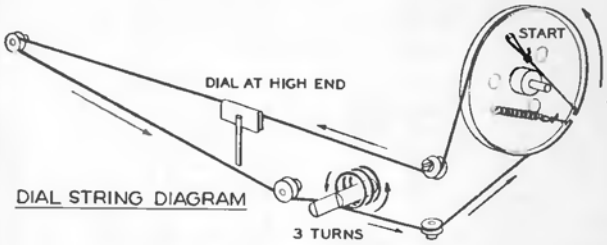


DIAL STRING DIAGRAM

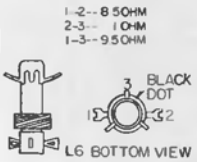


L6 BOTTOM VIEW


T1 BOTTOM VIEW

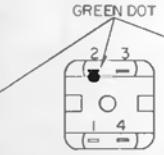


T3,4&5 BOTTOM VIEW


T3 BOTTOM VIEW

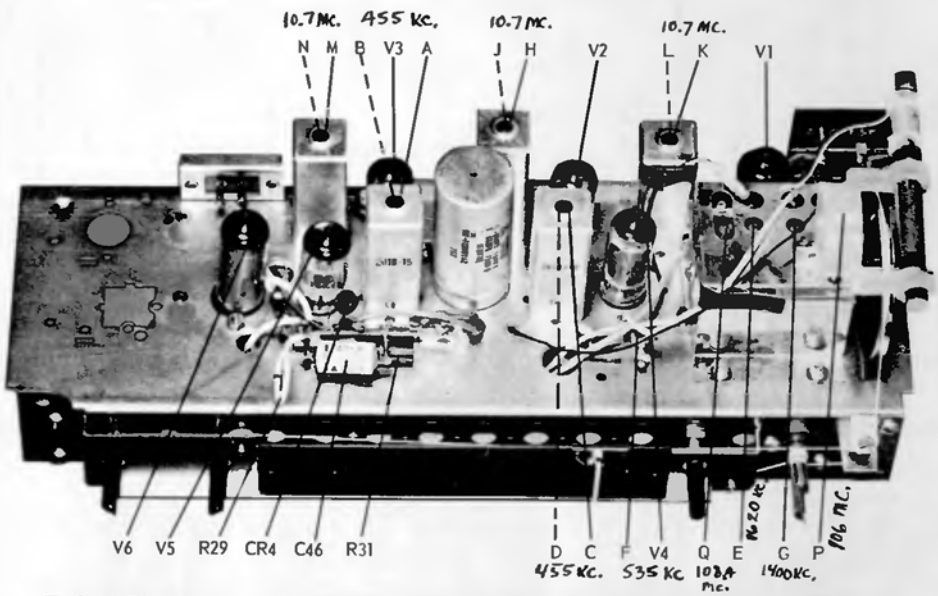


TOP VIEW OF CHASSIS SHOWING ALIGNMENT POINTS AND COMPONENTS

Note: Dashed (— — — —) lines indicate slug nearest chassis.


SW1 POSITIONS



SW1 REAR VIEW

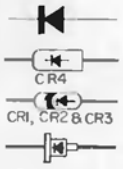


C45 BOTTOM VIEW

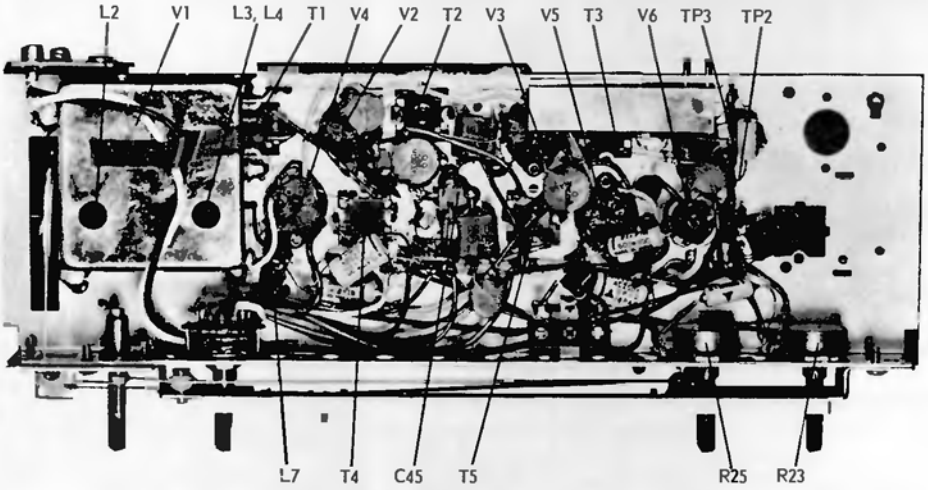


BOTTOM VIEW OF CHASSIS

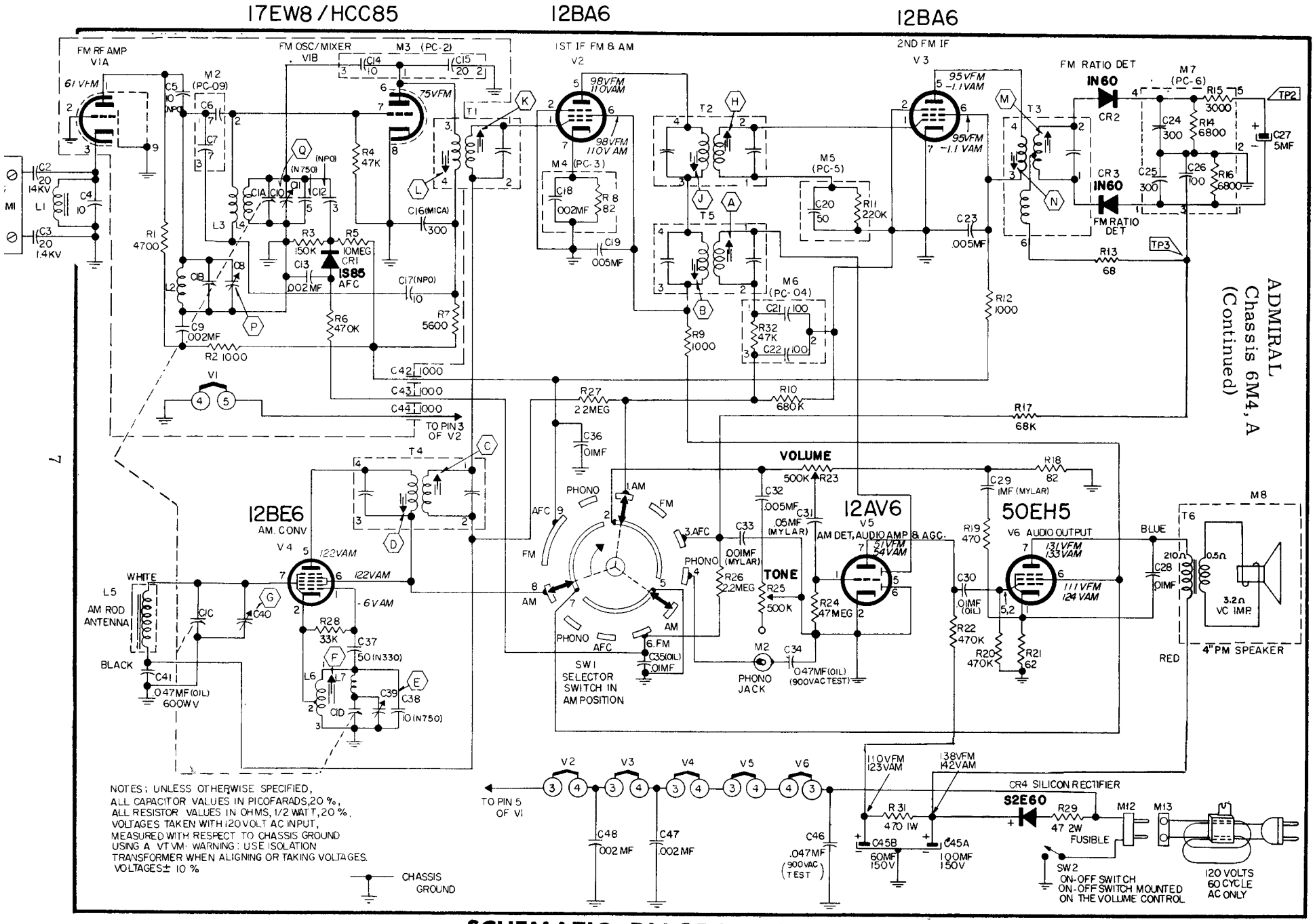


NOTES; UNLESS OTHERWISE SPECIFIED,
ALL CAPACITOR VALUES IN PICOFARADS, 20 %,
ALL RESISTOR VALUES IN OHMS, 1/2 WATT, 20 %.
VOLTAGES TAKEN WITH 120 VOLT AC INPUT,
MEASURED WITH RESPECT TO CHASSIS GROUND
USING A VTVM. WARNING: USE ISOLATION
TRANSFORMER WHEN ALIGNING OR TAKING VOLTAGES.
VOLTAGES ± 10 %

# SCHEMATIC DIAGRAM 6M4 CHASSIS

# Admiral

Chassis 5B7, Models: YK103, YK117, YK118, YK121
Chassis 5B7A, Models: YKC133, YKC147, YKC148, YKC151

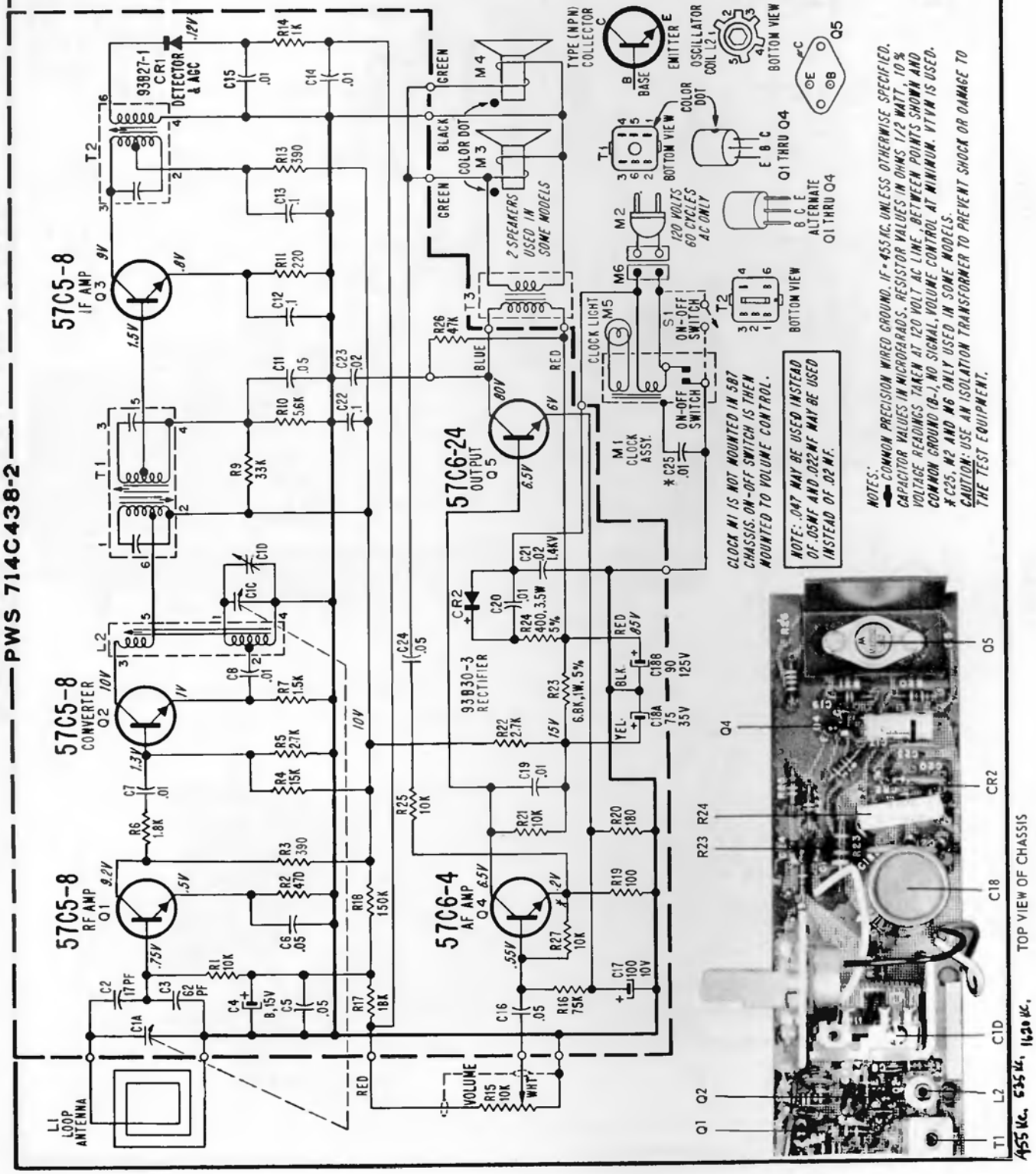

**Admiral®** Chassis 4R4, Model 4C253R4

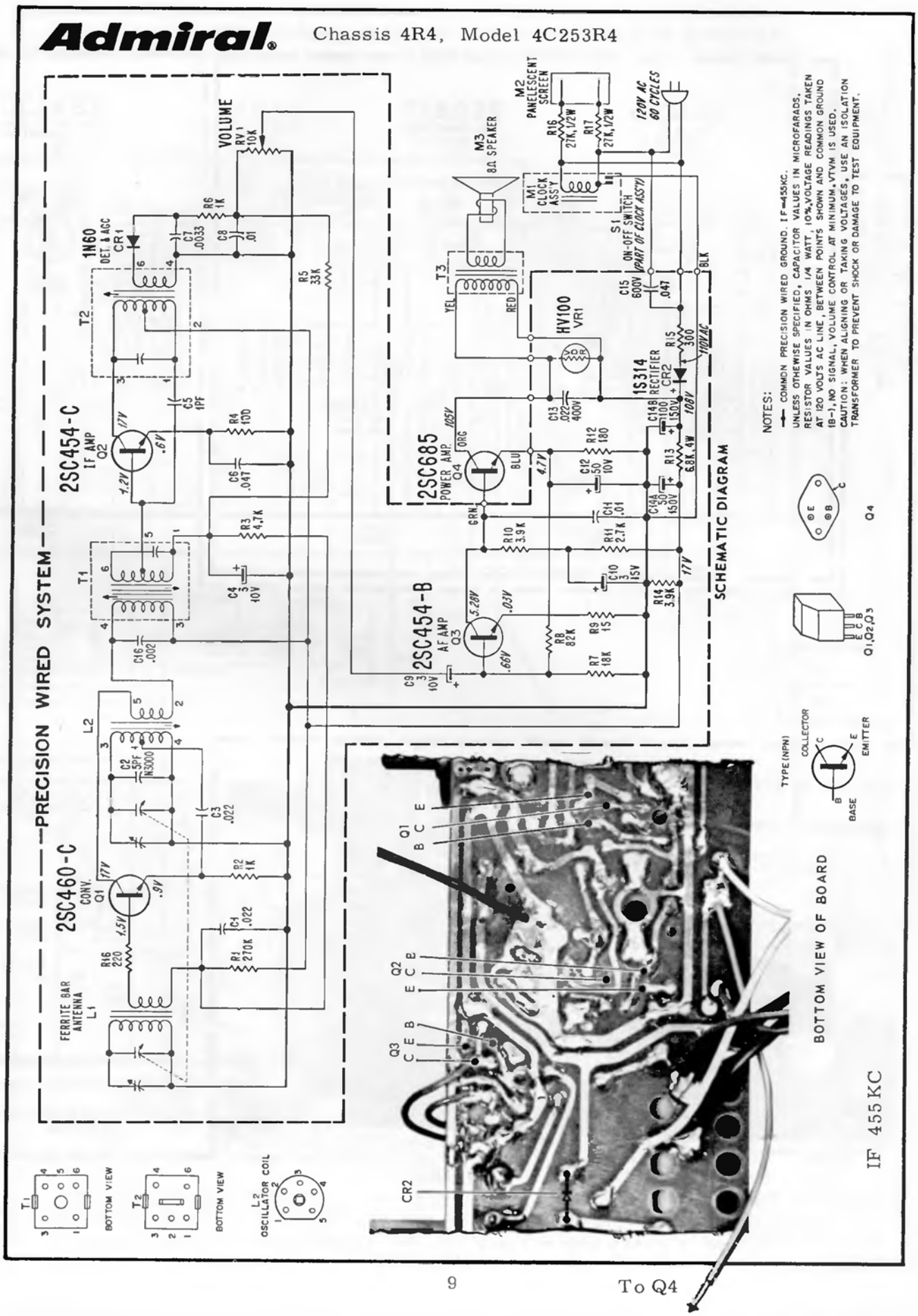

ADMIRAL (Chassis numbers on next page, model numbers below.)

## FM TUNER ASSEMBLY

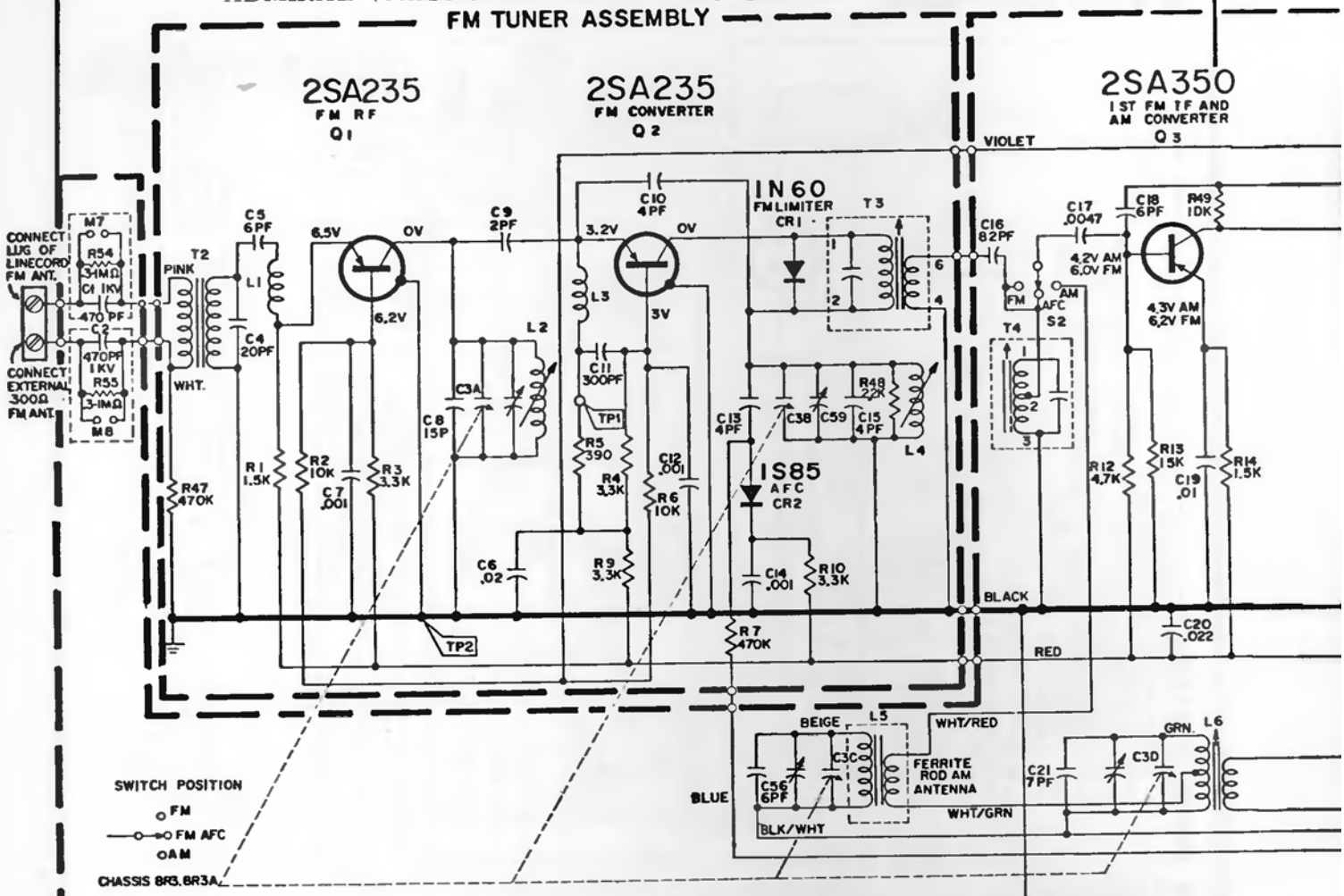


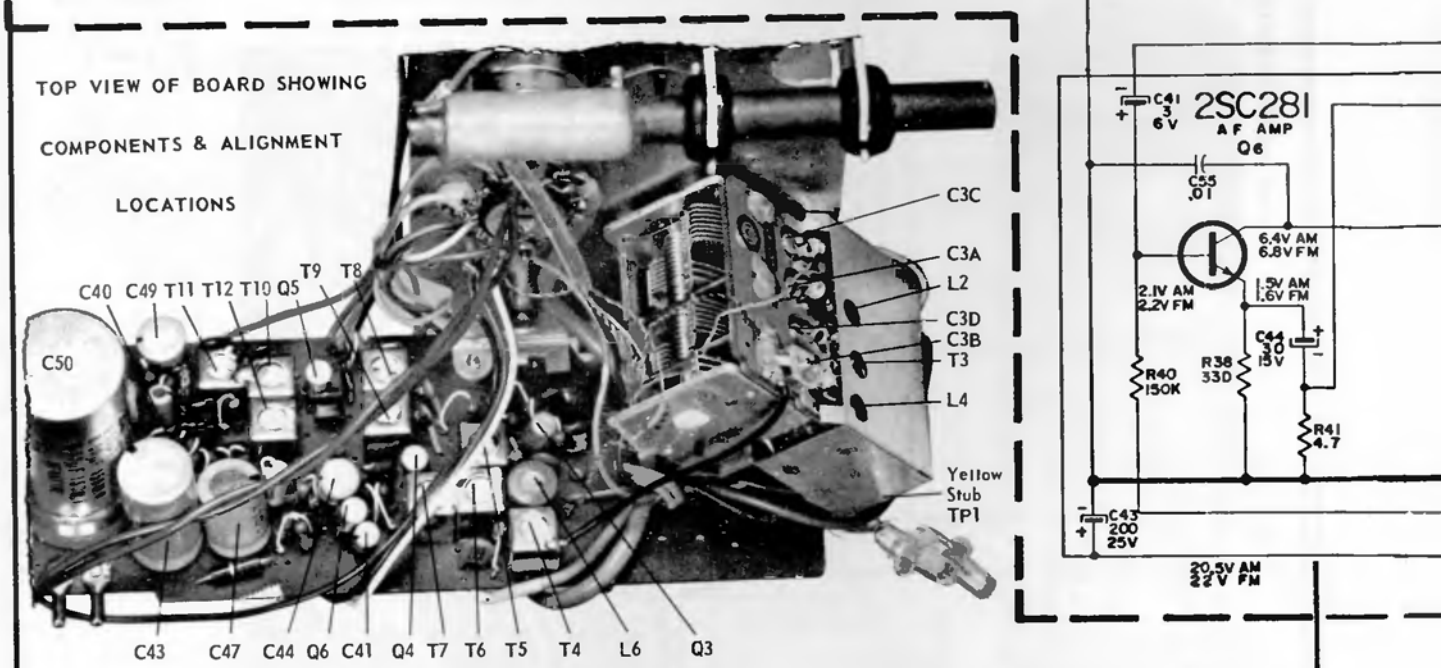


Models: Y441RA YC521, 531, 541, 551, 561RA
Y421RA Y461RA YR407, 703, 717, 718, 721, 731, 733, 741, 743
Y431RA Y471RA YRC417, 803, 817, 818, 821, 831, 833, 841, 843

Notes:
FM IF 10.7 MC
AM IF 455 KC

ADMIRAL Chassis numbers 8R3, A; 8S3, A, D, E, F, G; 8Y3

## PRECISION WIRED SYSTEM

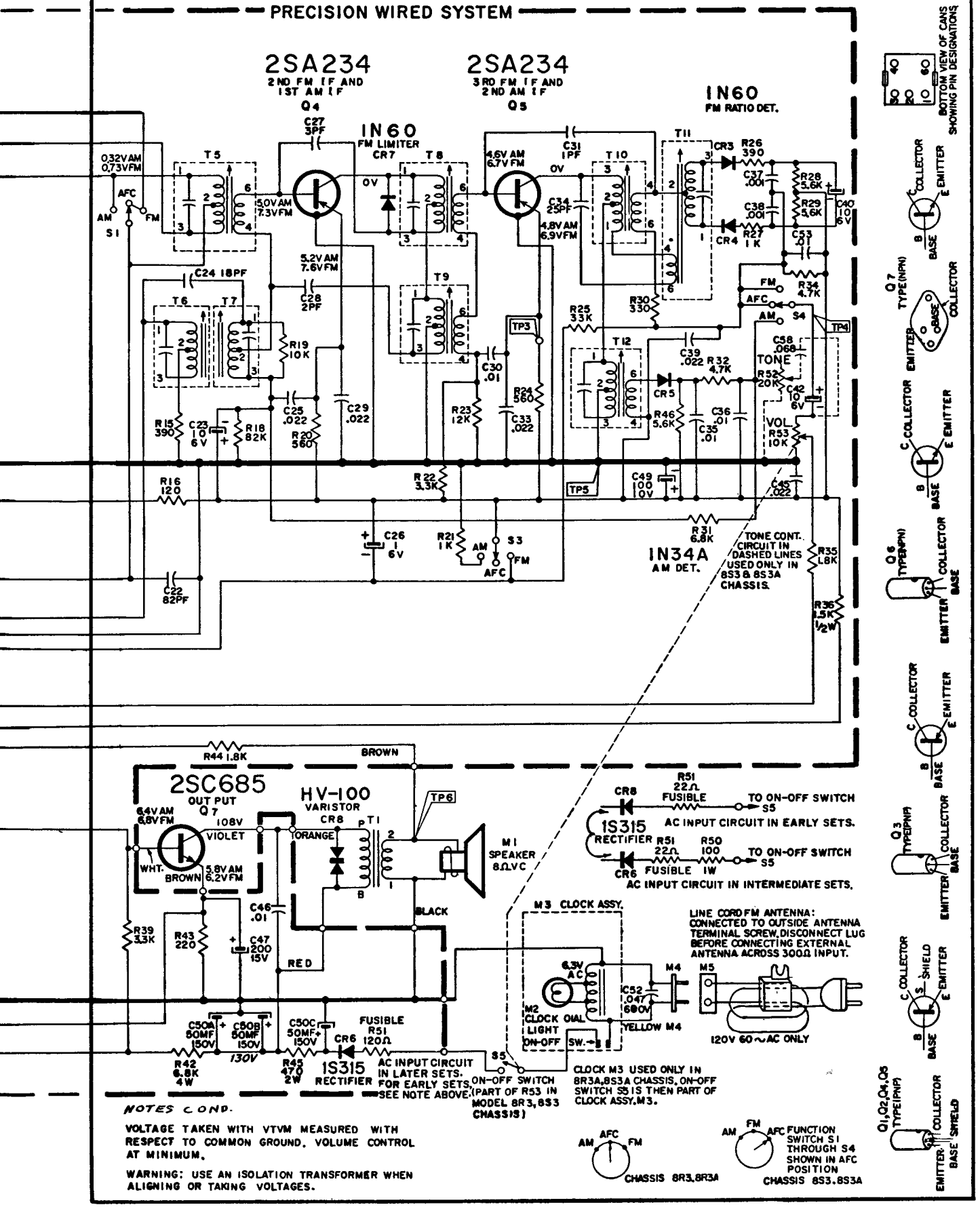


NOTES COND.

VOLTAGE TAKEN WITH VTVM MEASURED WITH RESPECT TO COMMON GROUND. VOLUME CONTROL AT MINIMUM.

WARNING: USE AN ISOLATION TRANSFORMER WHEN ALIGNING OR TAKING VOLTAGES.

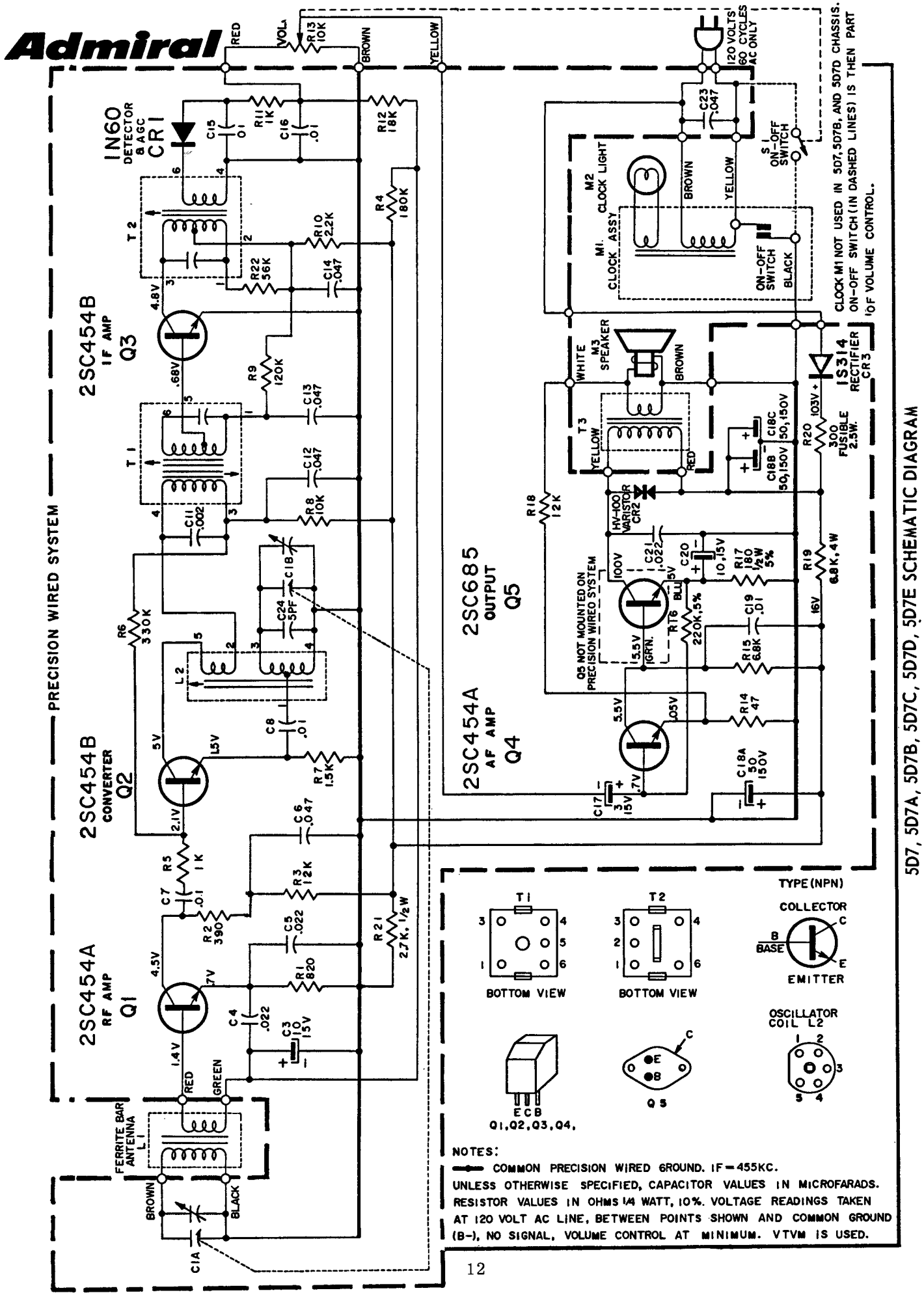
Admiral
PRECISION WIRED SYSTEM
5D7, 5D7A, 5D7B, 5D7C, 5D7D, 5D7E SCHEMATIC DIAGRAM
1N60 DETECTOR & AGC CR1
2SC454B IF AMP Q3
2SC454B CONVERTER Q2
2SC454A RF AMP Q1
2SC685 OUTPUT Q5
2SC454A AF AMP Q4
FERRITE BAR ANTENNA L1
M1. CLOCK ASSY
M2 CLOCK LIGHT
M3 SPEAKER
S1 ON-OFF SWITCH
120 VOLTS 60 CYCLES AC ONLY
1S314 RECTIFIER CR3
HV-100 VARISTOR CR2
Q5 NOT MOUNTED ON PRECISION WIRED SYSTEM
CLOCK M1 NOT USED IN 5D7, 5D7B, AND 5D7D CHASSIS. ON-OFF SWITCH (IN DASHED LINES) IS THEN PART OF VOLUME CONTROL.
TYPE (NPN)
COLLECTOR
BASE
EMITTER
BOTTOM VIEW
OSCILLATOR COIL L2
ECB
Q1,Q2,Q3,Q4,
Q5
NOTES:
COMMON PRECISION WIRED GROUND. IF = 455KC.
UNLESS OTHERWISE SPECIFIED, CAPACITOR VALUES IN MICROFARADS.
RESISTOR VALUES IN OHMS 1/4 WATT, 10%. VOLTAGE READINGS TAKEN AT 120 VOLT AC LINE, BETWEEN POINTS SHOWN AND COMMON GROUND (B-), NO SIGNAL, VOLUME CONTROL AT MINIMUM. VTVM IS USED.

# Admiral

Chassis 10A3
Models: YK211GP,
YK212GP

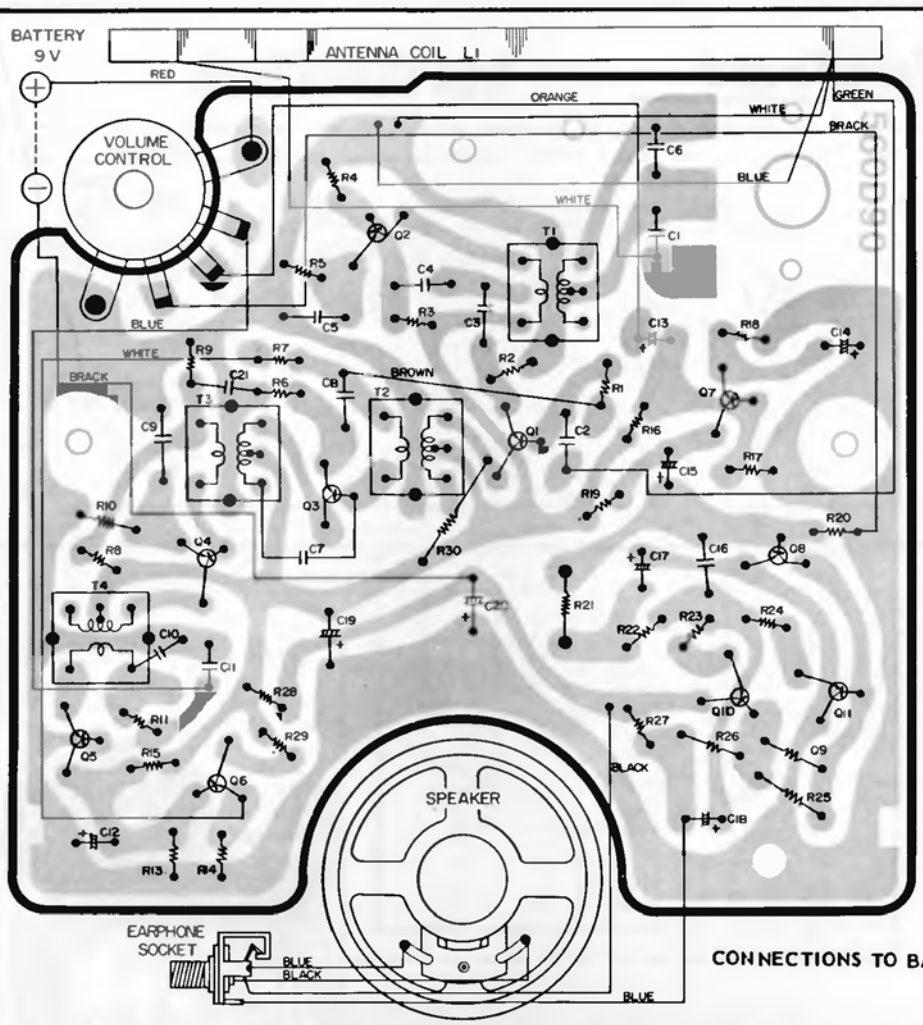


CONNECTIONS TO BACK OF BOARD & WIRING

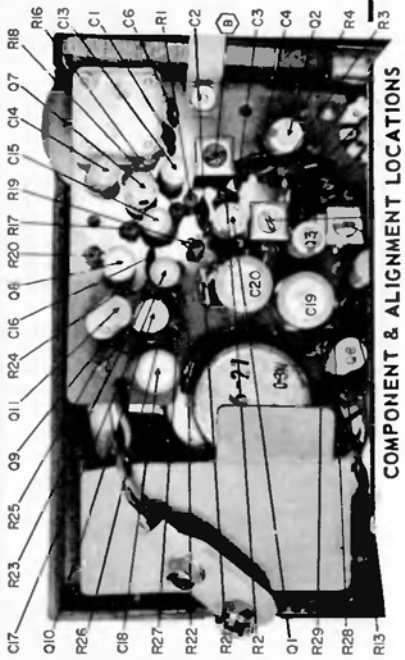

COMPONENT & ALIGNMENT LOCATIONS

PRECISION WIRED SYSTEM

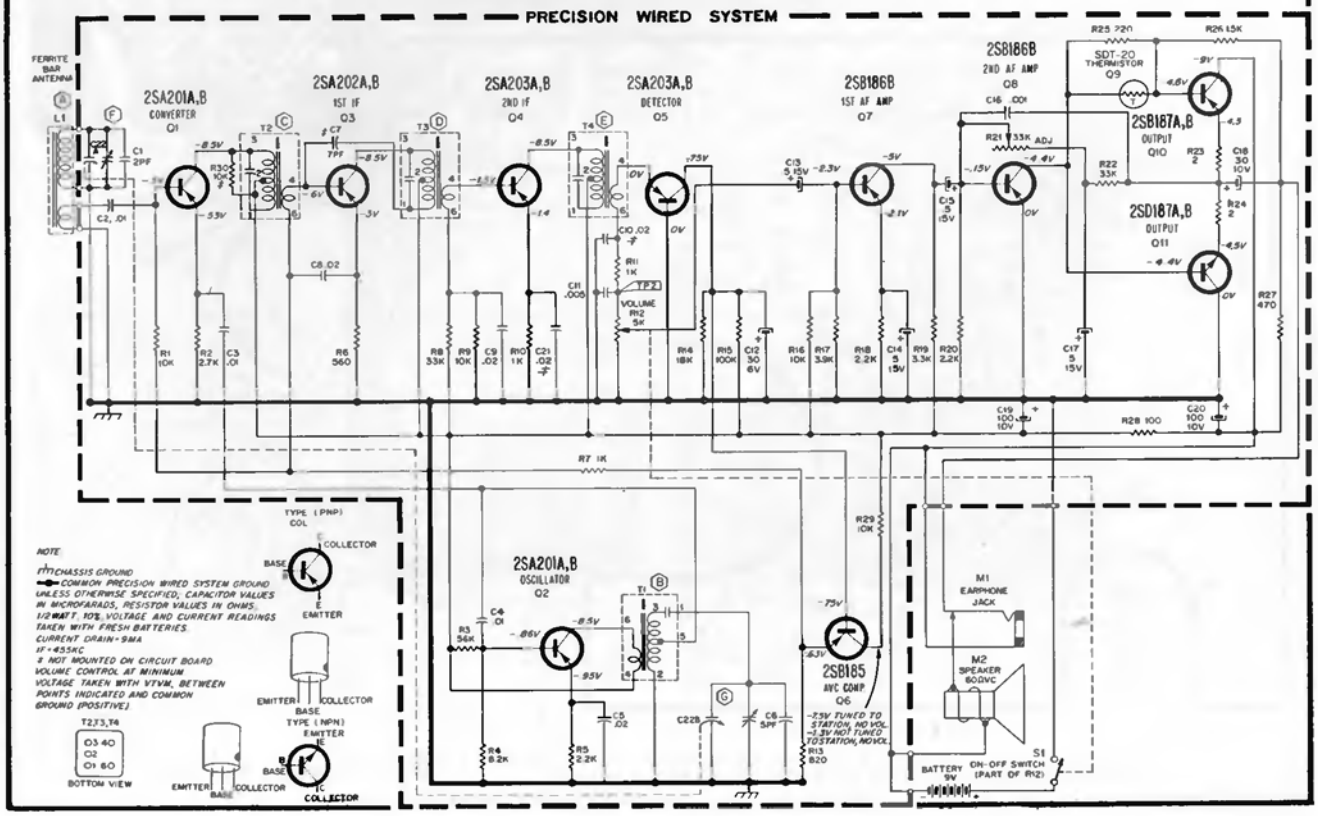

# Admiral

MODEL: YK220
CHASSIS: 10B3

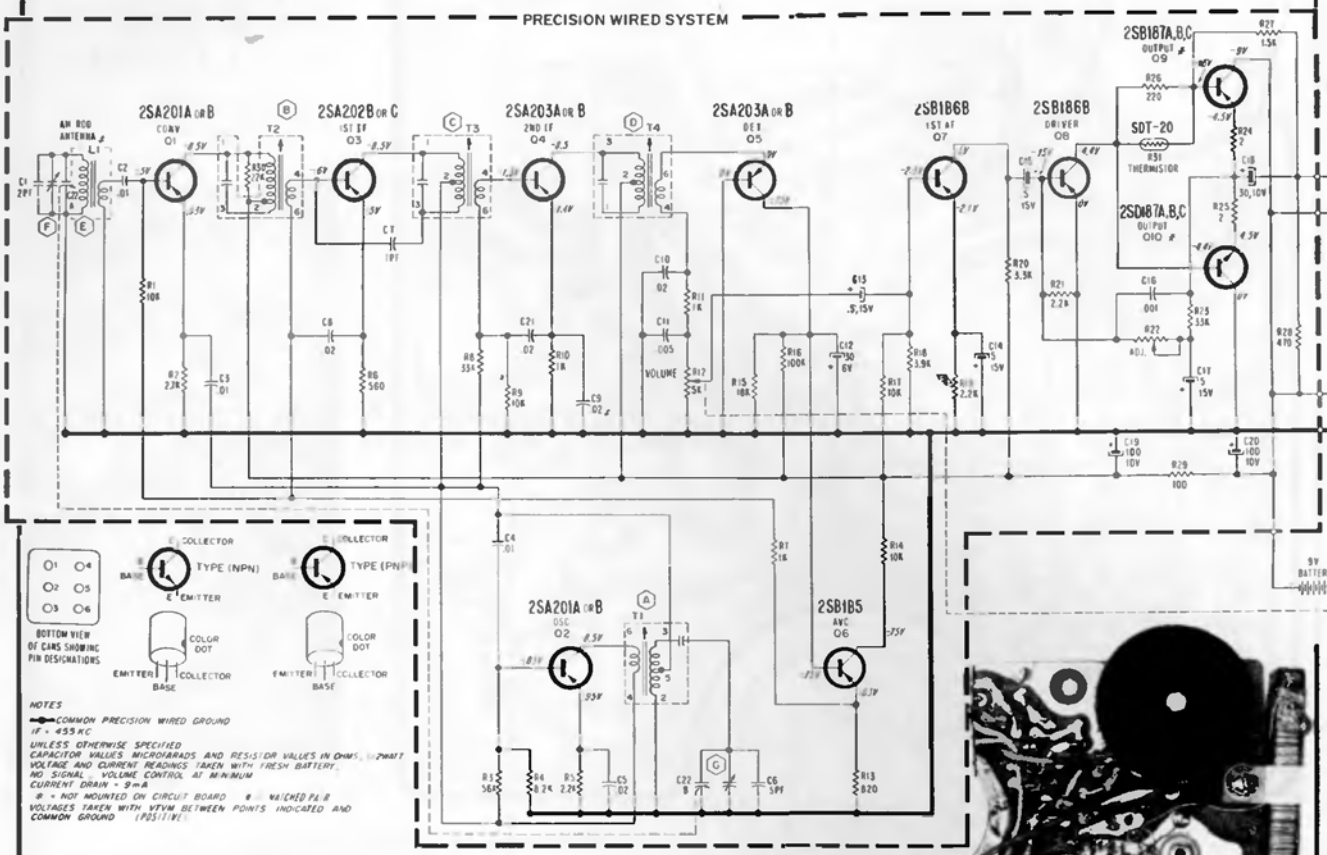


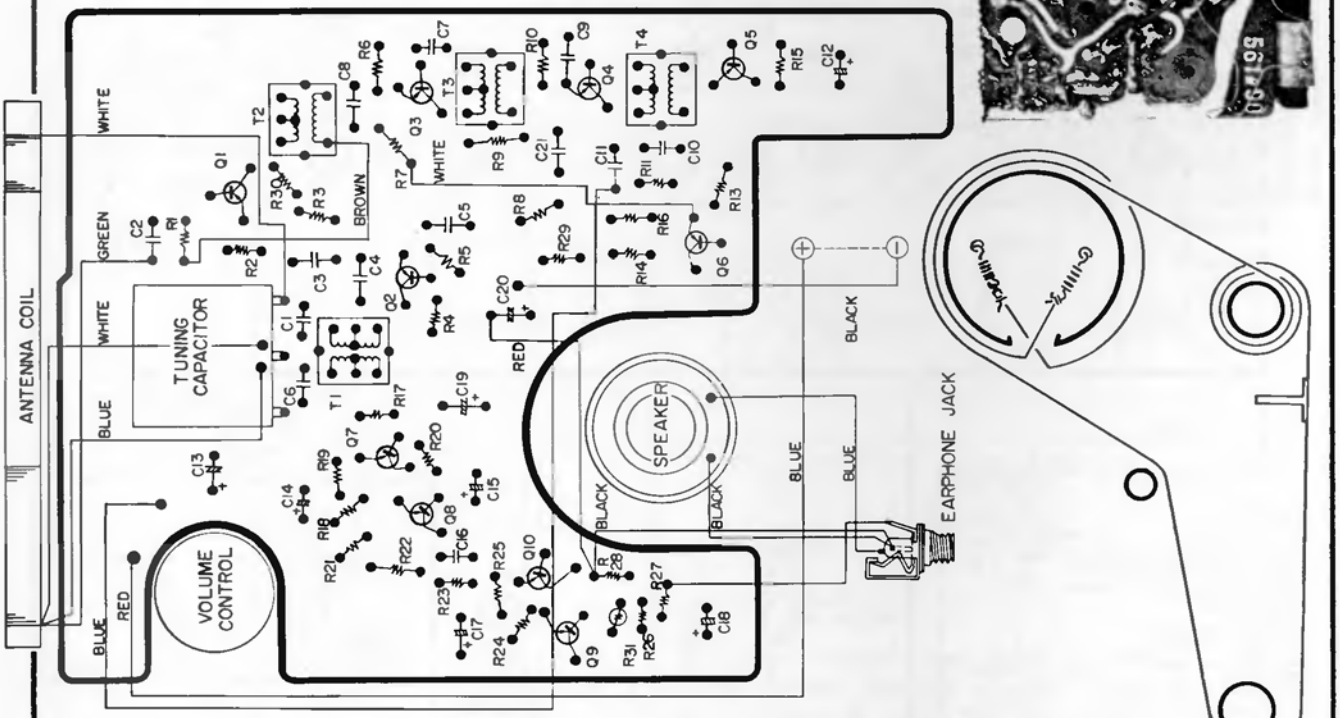


COMPONENT CONNECTIONS TO BACK OF BOARD & WIRING

DIAL STRINGING DIAGRAM

# Admiral

MODEL: YK237
CHASSIS: 10C3

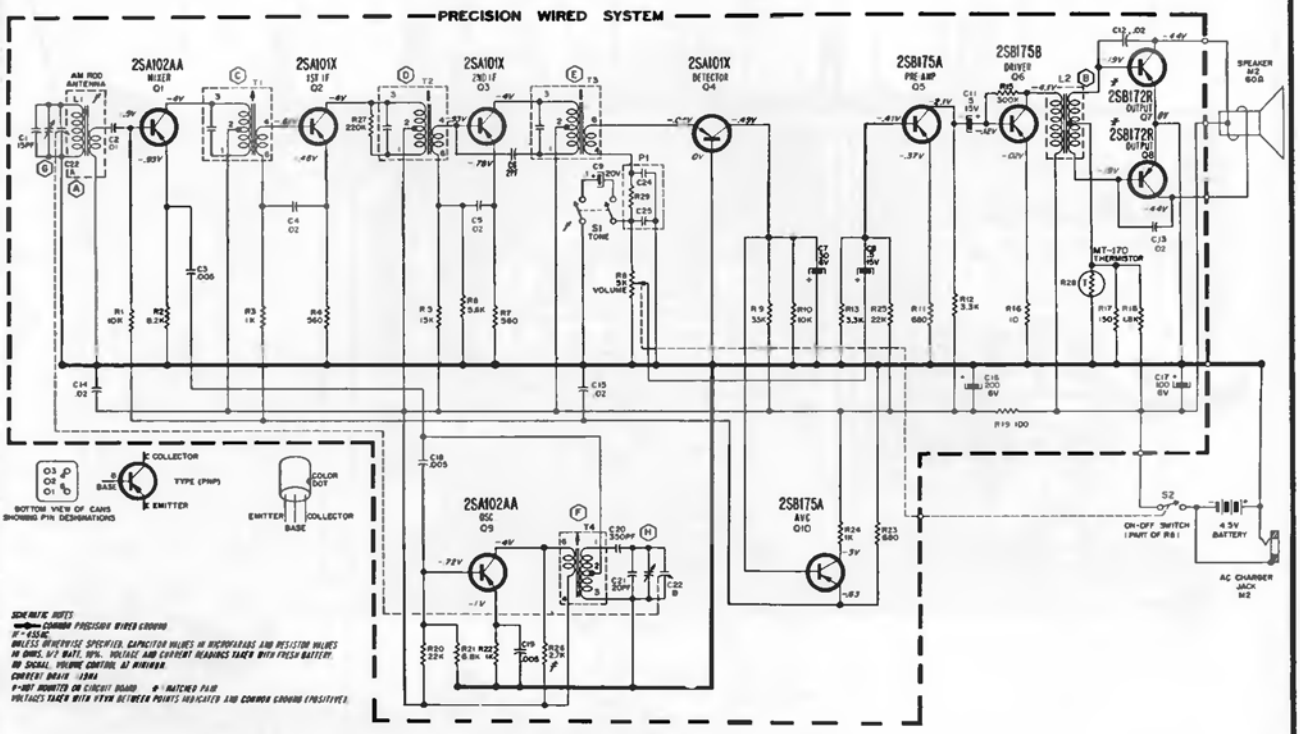


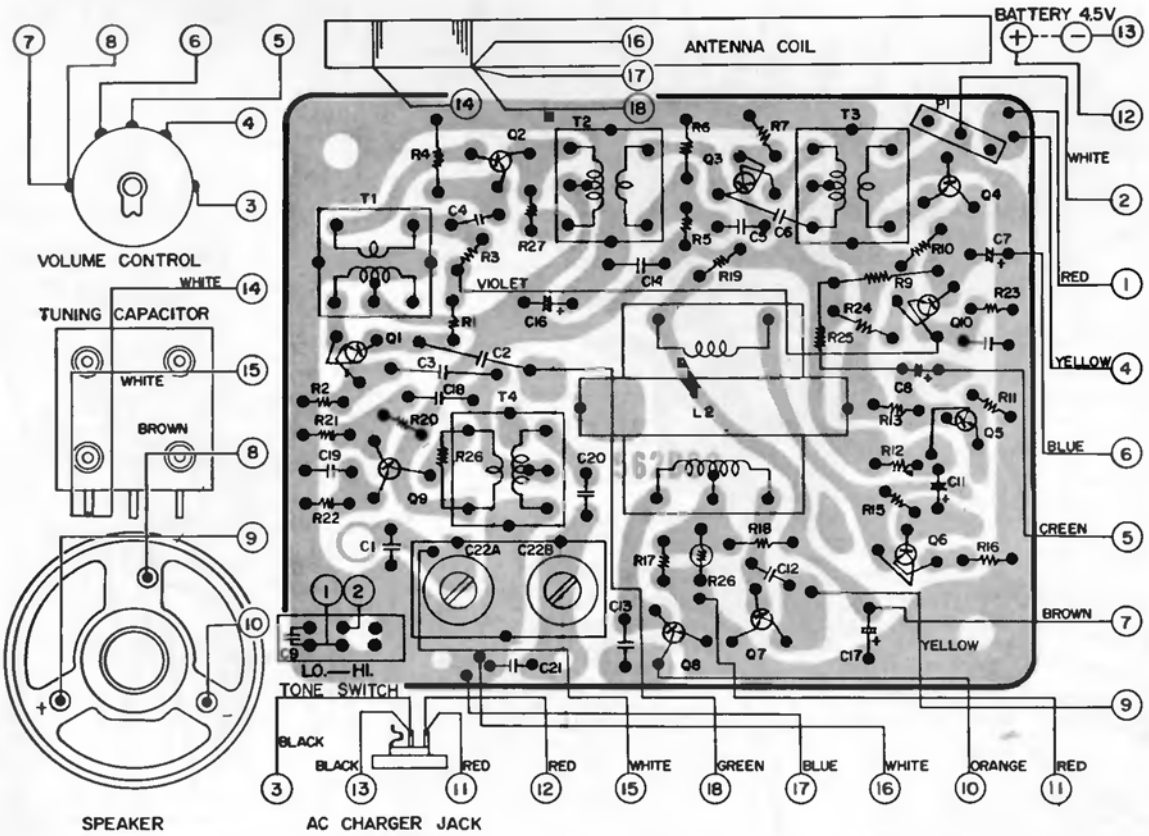


COMPONENT CONNECTIONS TO BACK OF BOARD & WIRING

ADMIRAL Chassis 20A6, A, B, C (Continued on next page.)

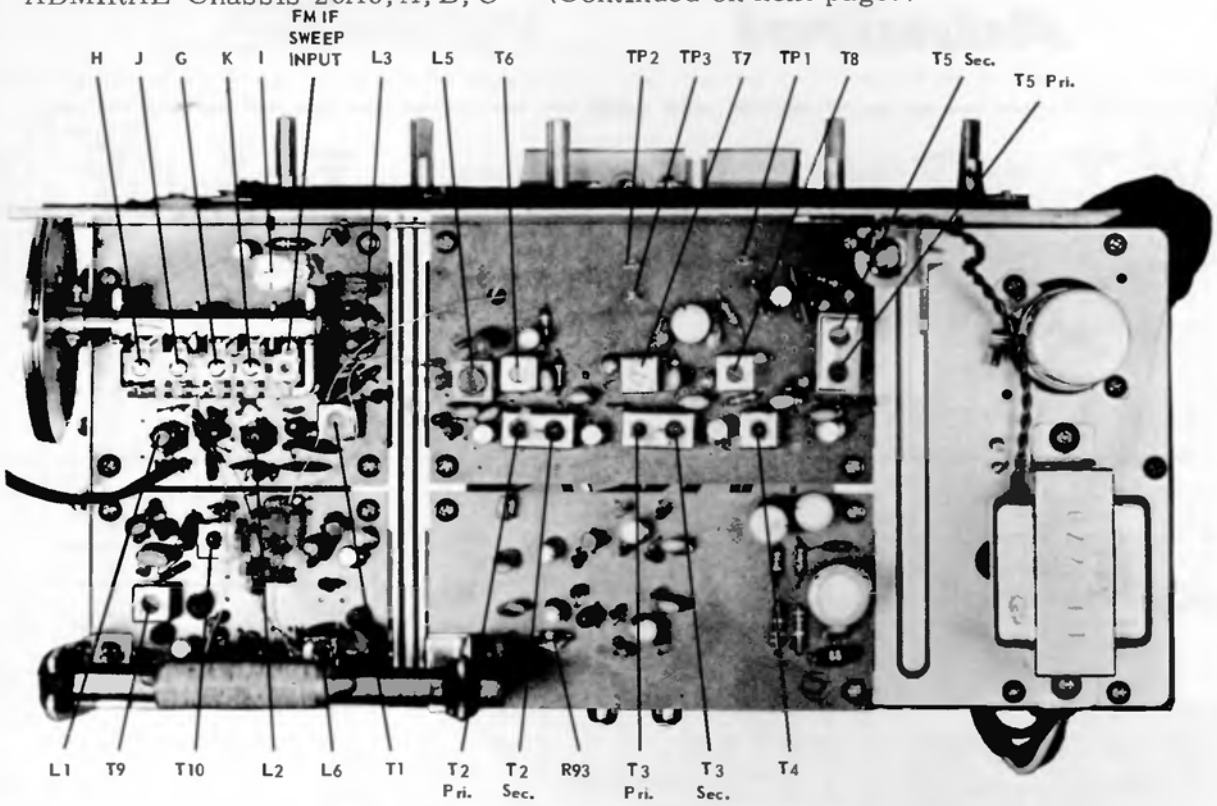


TOP VIEW OF AUDIO BOARD

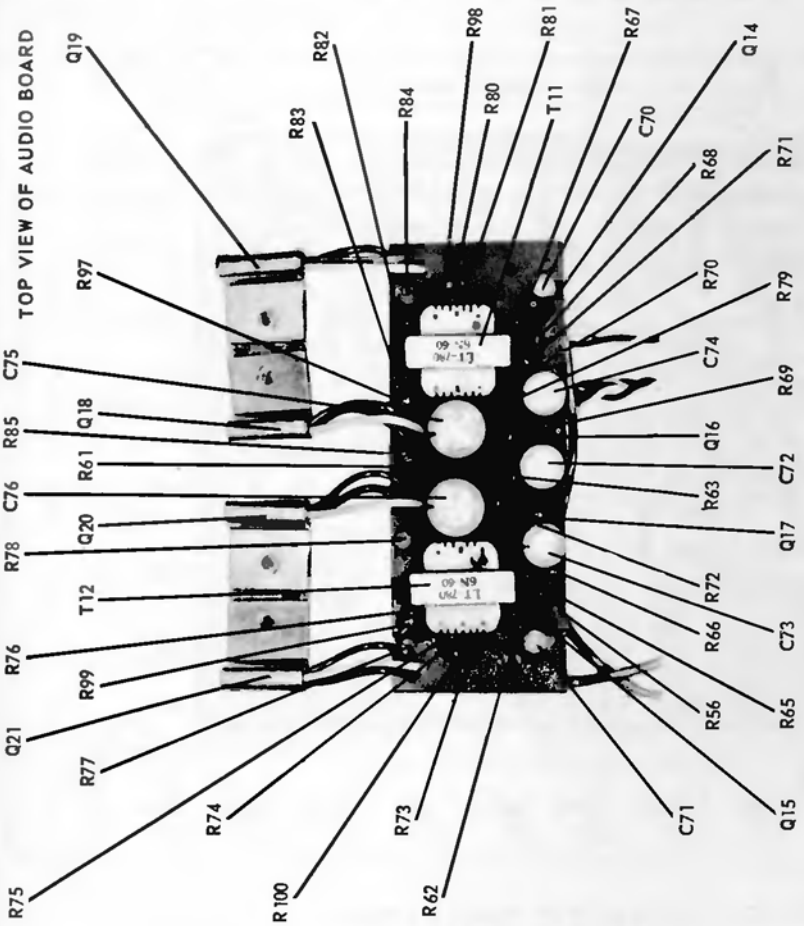


DIAL STRINGING DIAGRAM

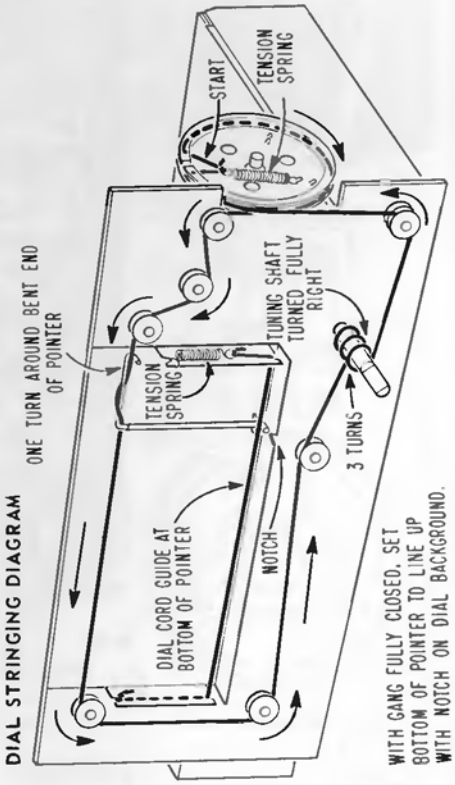


WITH GANG FULLY CLOSED, SET BOTTOM OF POINTER TO LINE UP WITH NOTCH ON DIAL BACKGROUND.

ADMIRAL Chassis 20A6, A, B, C;
Models below

Continued from preceding page.

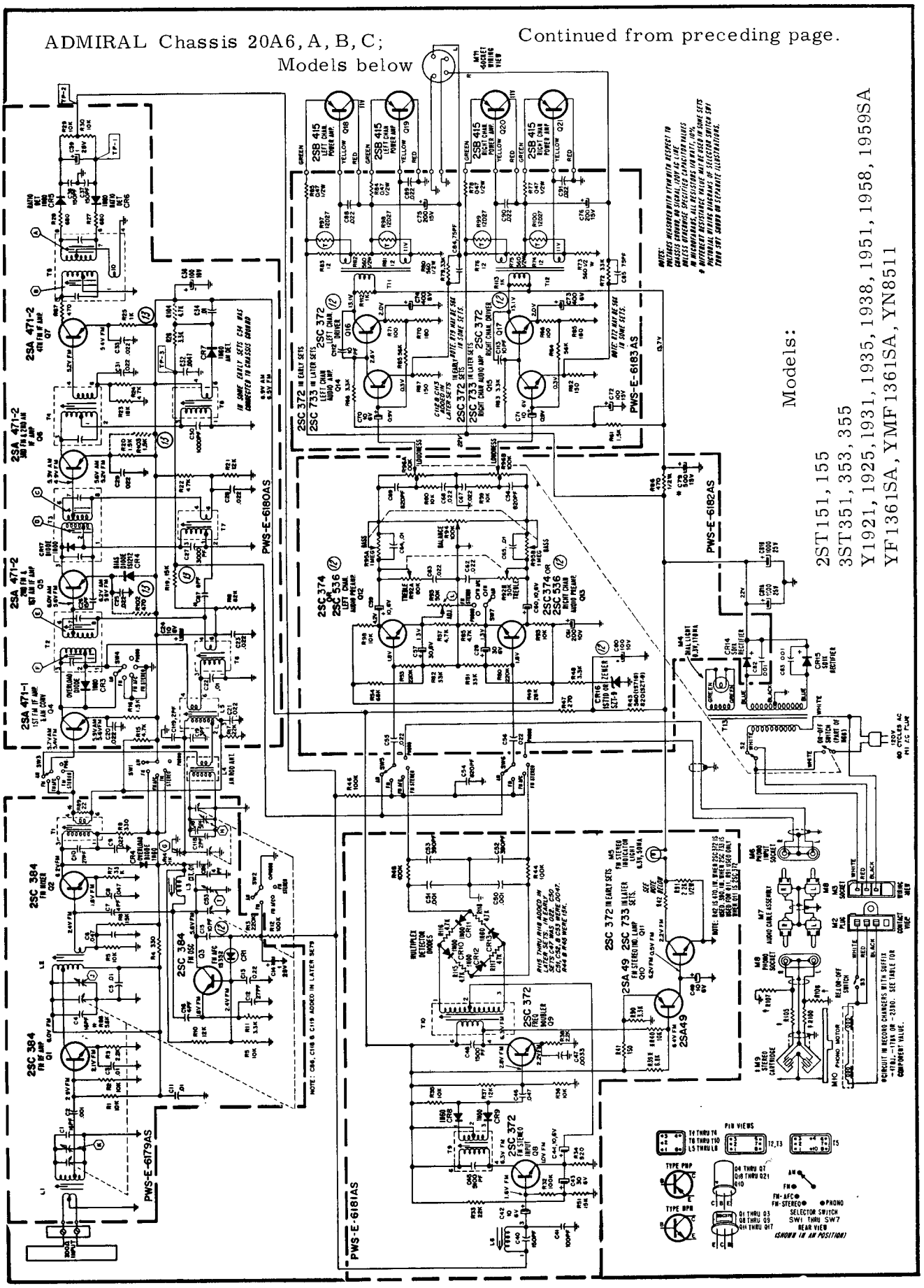


Models:

2ST151, 155
3ST351, 353, 355
Y1921, 1925, 1931, 1935, 1938, 1951, 1958, 1959SA
YF1361SA, YMF1361SA, YN8511

# ADMIRAL Chassis 10T1, Model Y741R

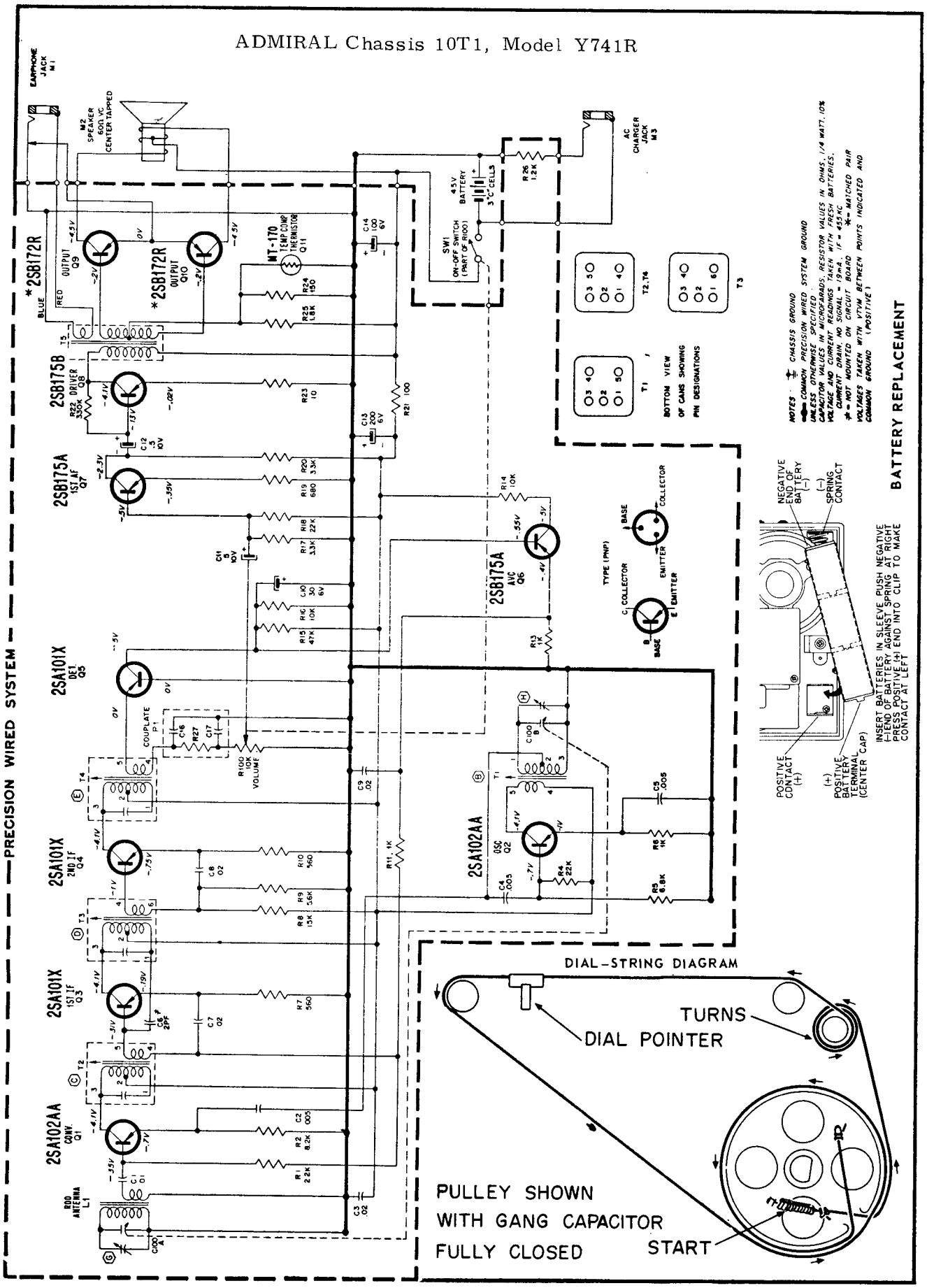

# Arvin

## Models 57R72, 57R75, 57R78

| TR-2 | TR-3 | D-1 | TR-4 | TR-5 & -6 |
|---|---|---|---|---|
| S99103 | S99102 | 1N295 | S99201 | S99203 |
| 1ST I.F. | 2ND I.F. | DETECTOR | AUDIO DRIVER | AUDIO OUTPUT |

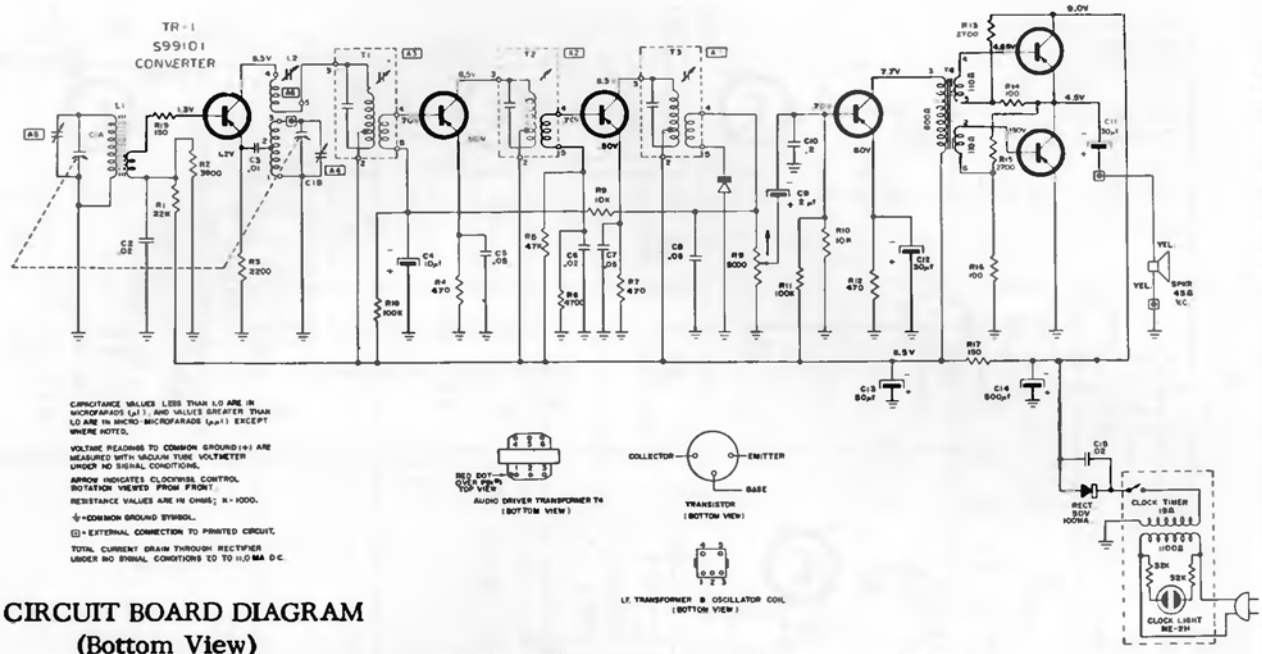


## CIRCUIT BOARD DIAGRAM
(Bottom View)

IF.... 455 Kc

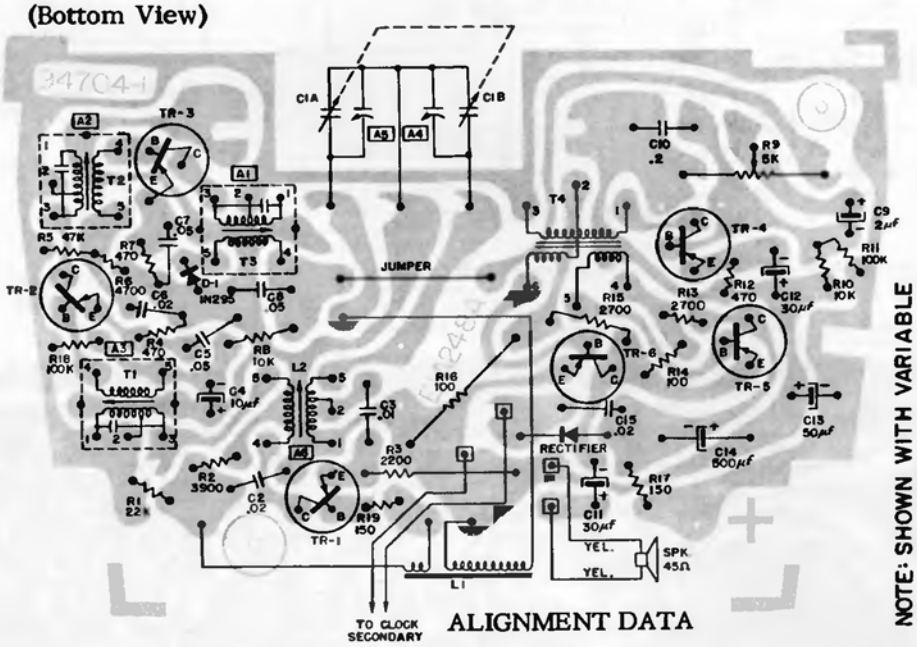


NOTE: SHOWN WITH VARIABLE IN EXTREME CLOCKWISE POSITION.

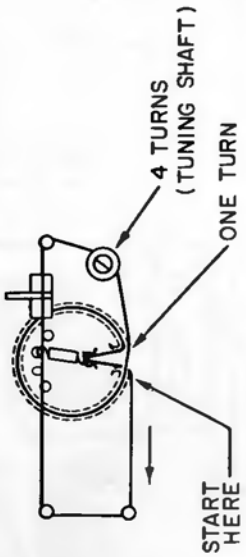


## ALIGNMENT DATA

| Position of Variable | Frequency of Generator | Dummy Antenna | Generator Output Connection | Trimmer Adj. in order shown for Max. Output | Functions of Trimmer |
|---|---|---|---|---|---|
| Open | 455 Kc | .05 mf. | C1A | A1 (Top of T3)<br>A2 (Top of T2)<br>A3 (Top of T1) | I.F.<br>I.F. |
| Open | 1640 Kc | | Test Loop | A4 | Oscillator |
| 1400 Kc | 1400 Kc | | Test Loop | A5 | Antenna |
| 600 Kc | 600 Kc | | Test Loop | A6 Check Point (LZ) | Oscillator |

Recheck A4 at 1640 Kc after adjustment of A6.

ARVIN Models 37R28, 37R29, 37R38, 47R28, 47R29, 47R38

(Continued on next page.)

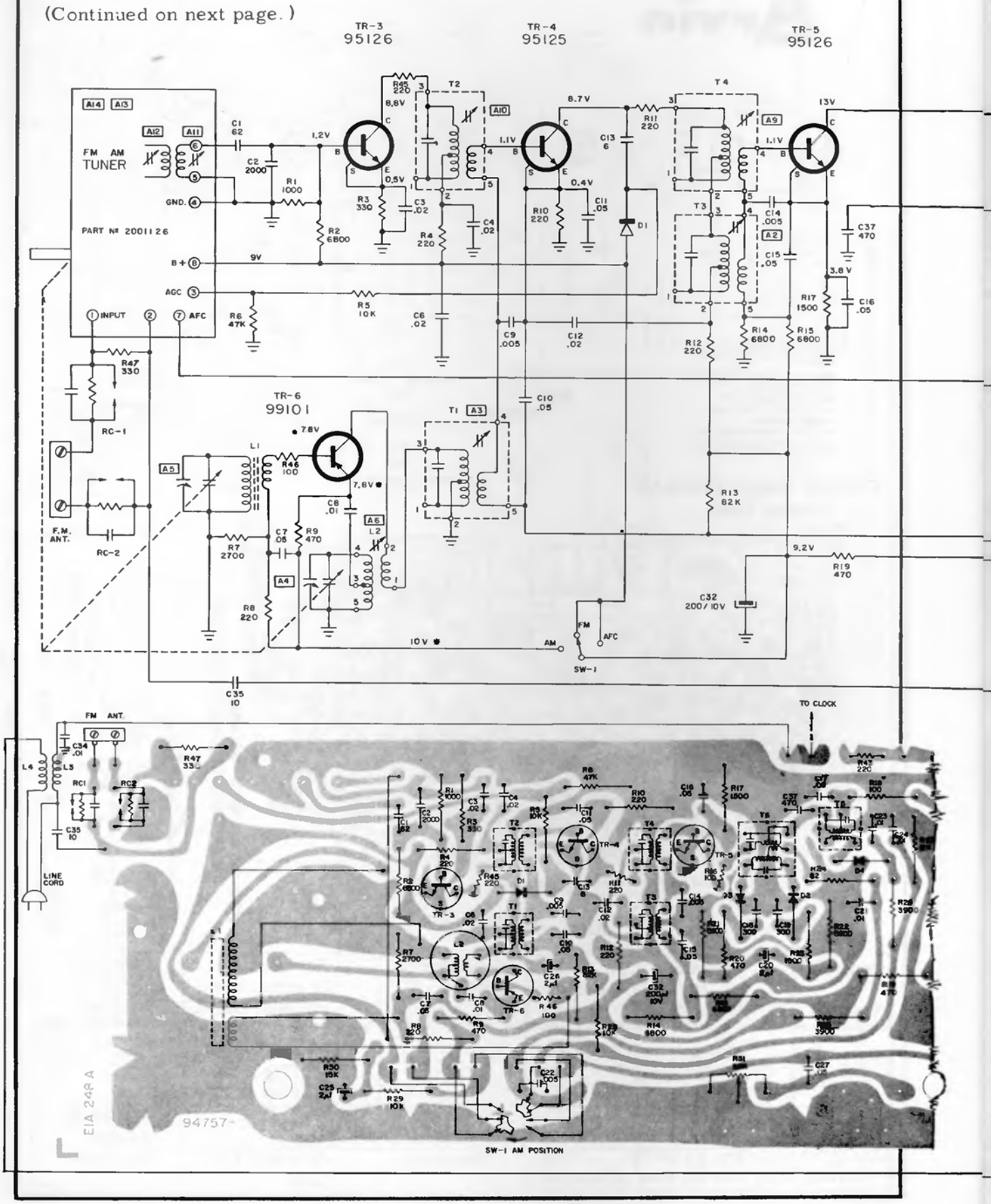

ARVIN Models 37R28, 37R29, 37R38, 47R28, 47R29, 47R38

(Continued from preceding page.)

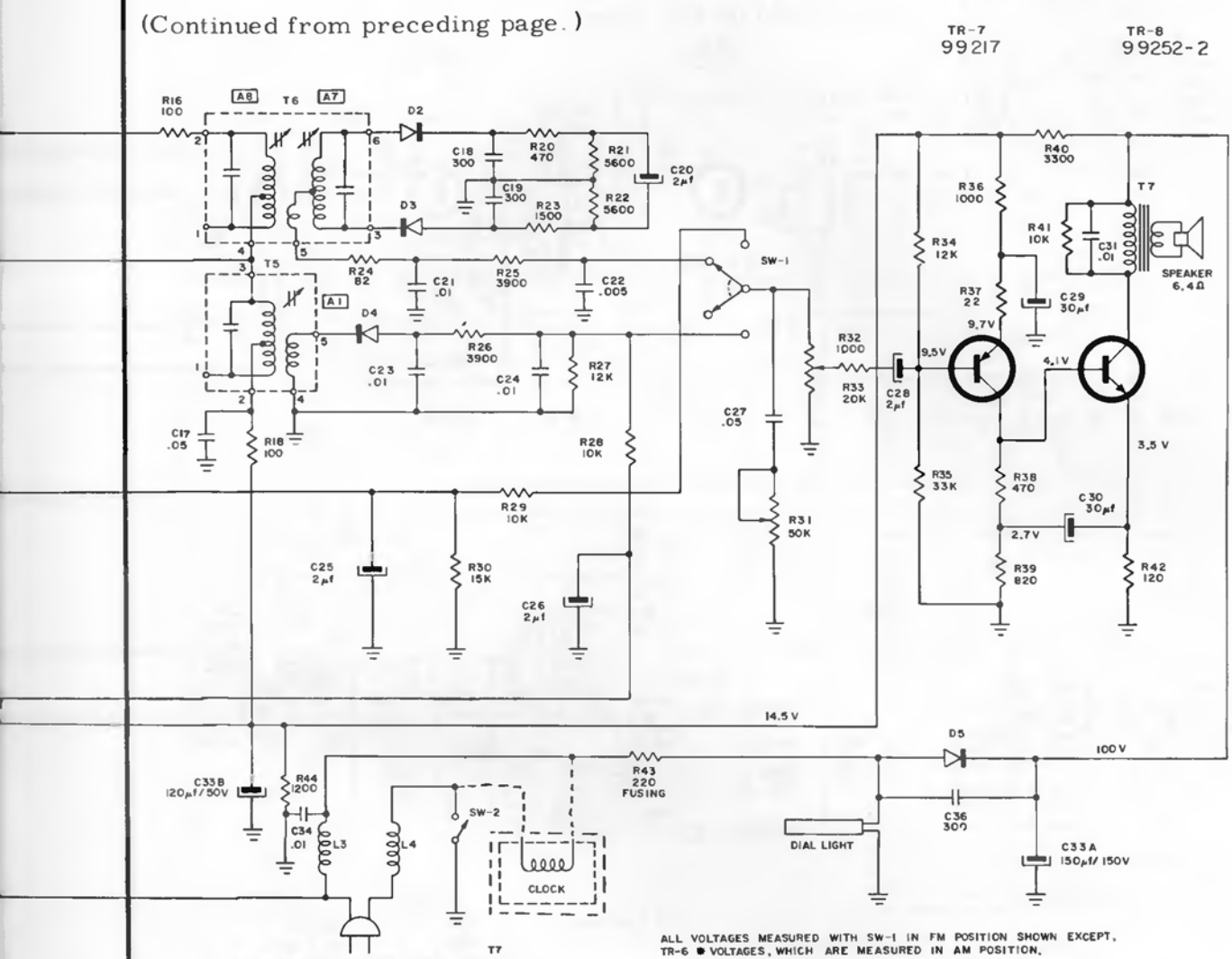


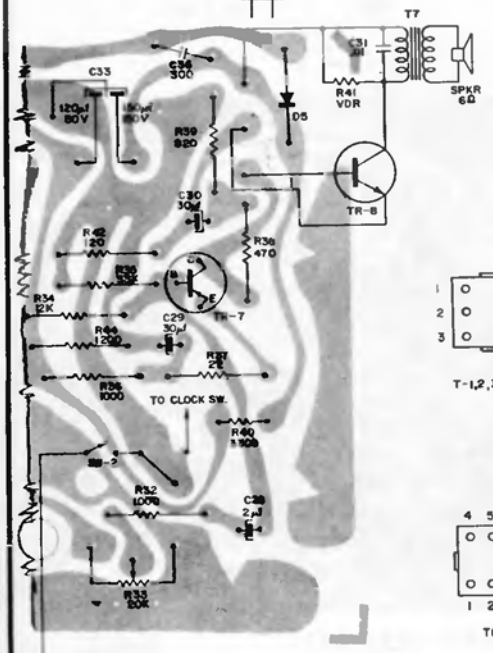


ALL VOLTAGES MEASURED WITH SW-1 IN FM POSITION SHOWN EXCEPT, TR-6 ● VOLTAGES, WHICH ARE MEASURED IN AM POSITION.

CAPACITANCE VALUES LESS THAN 1.0 ARE IN MICROFARDS (μf), AND VALUES GREATER THAN 1.0 ARE IN PICO-FARADS (pf) EXCEPT WHERE NOTED.

VOLTAGE READINGS TO COMMON GROUND (+) ARE MEASURED WITH VACUUM TUBE VOLTMETER UNDER NO SIGNAL CONDITIONS.

RESISTANCE VALUES ARE IN OHMS, K=1000

⏚ = COMMON GROUND SYMBOL.

⊡ = EXTERNAL CONNECTION TO PRINTED CIRCUIT.

Transistor basing, bottom view.

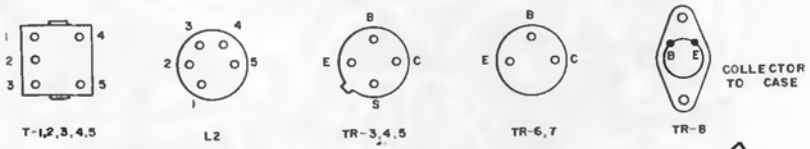


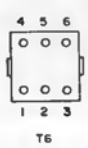


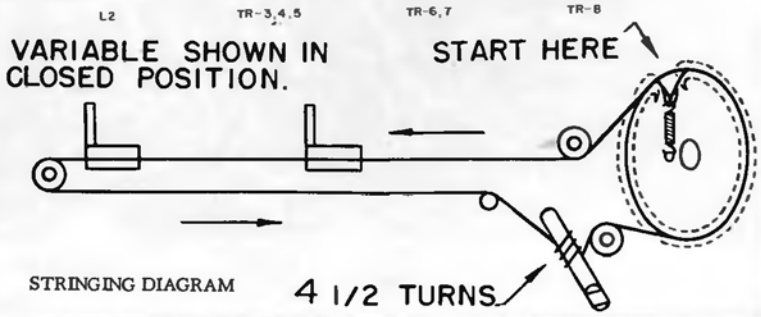


STRINGING DIAGRAM

(Continued from preceding page)

# ARVIN Models 37R68, 46R48

(Continued on next page)

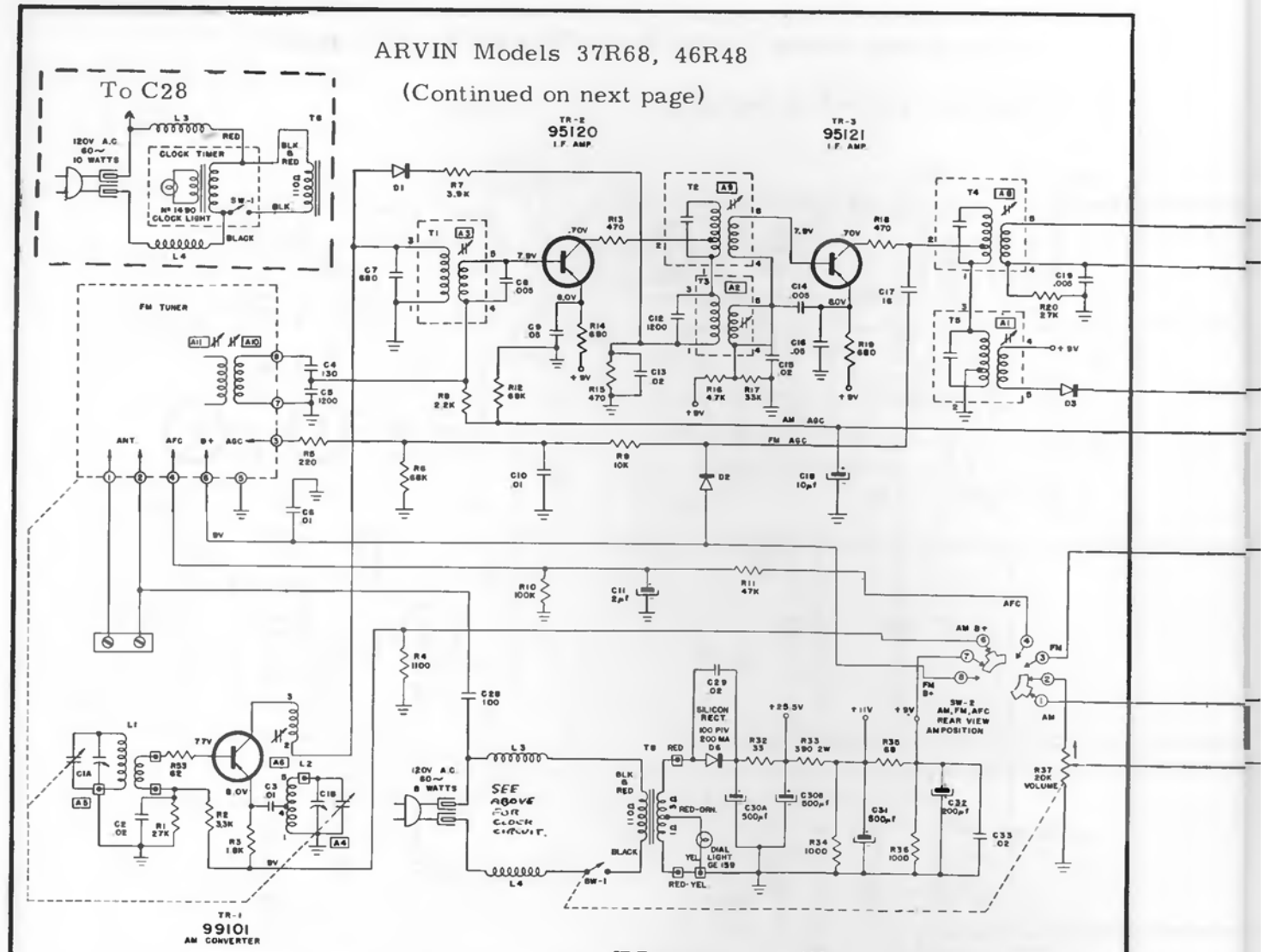


| IF Frequency | AM | 455 kc. |
|---|---|---|
| | FM | 10.7 mc. |

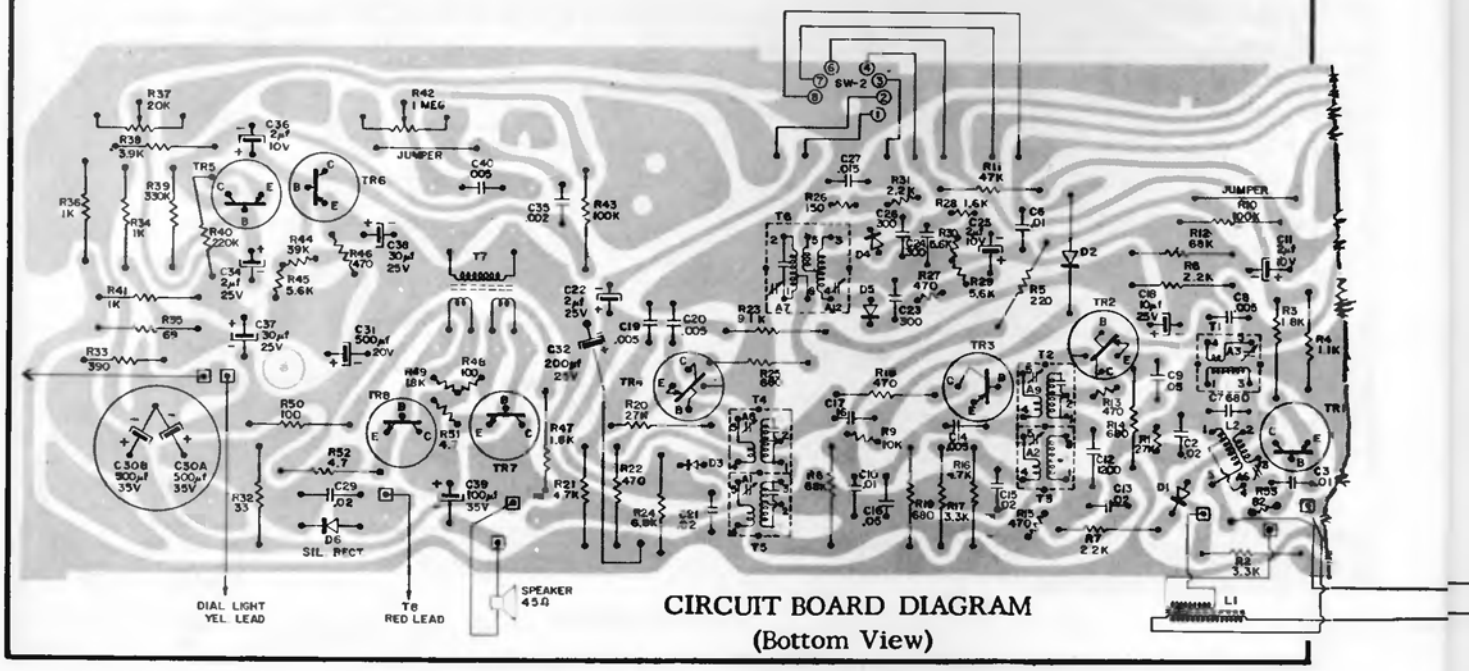


**CIRCUIT BOARD DIAGRAM**
**(Bottom View)**

T8 Red-Yellow Lead

# ARVIN Models 37R68, 46R48

(Continued from preceding page)

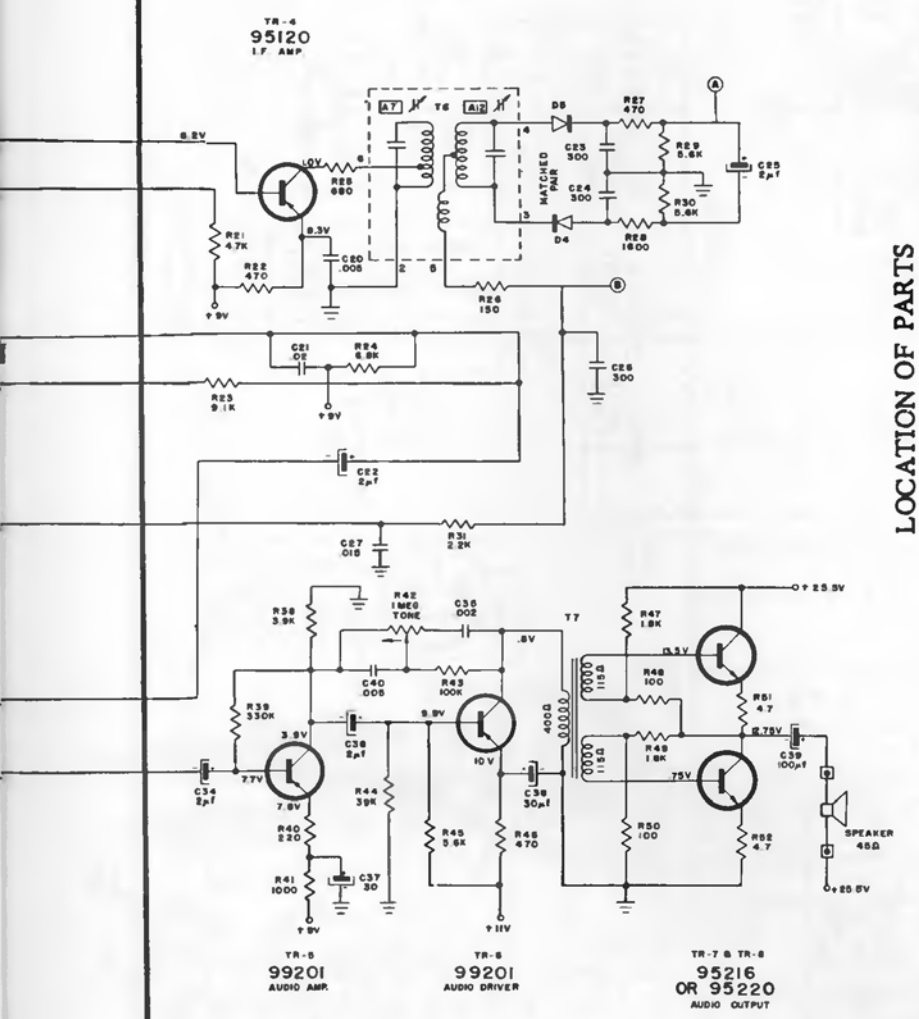


## LOCATION OF PARTS

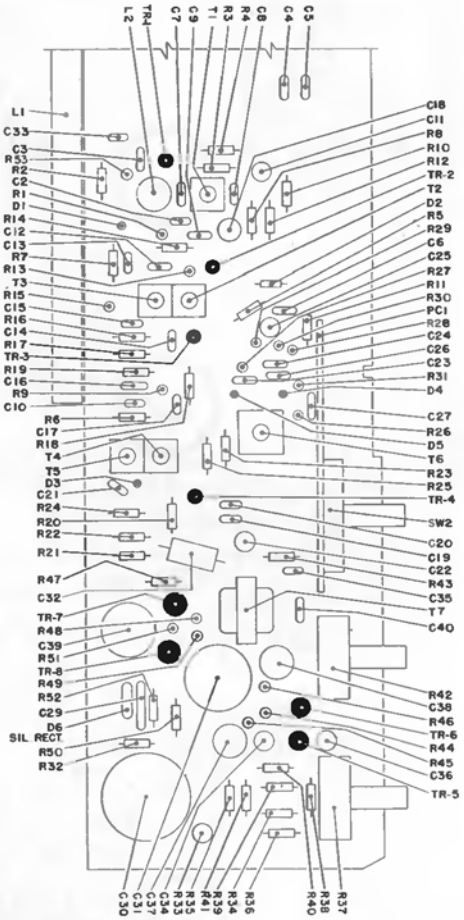


NOTES

RESISTANCE VALUES ARE IN OHMS, K=1000, MEG=1,000,000

—⊠— = EXTERNAL CONNECTIONS TO PRINTED CIRCUIT

CAPACITANCE VALUES LESS THAN 1.0 ARE IN MICROFARADS (μf) AND VALUES GREATER THAN 1.0 ARE IN MICRO-MICROFARADS (μμf) EXCEPT WHERE NOTED.

VOLTAGE READINGS TO COMMON GROUND (-) ARE MEASURED WITH VACUUM TUBE VOLTMETER UNDER NO SIGNAL CONDITIONS.

ARROW INDICATES CLOCKWISE CONTROL ROTATION VIEWED FROM FRONT.

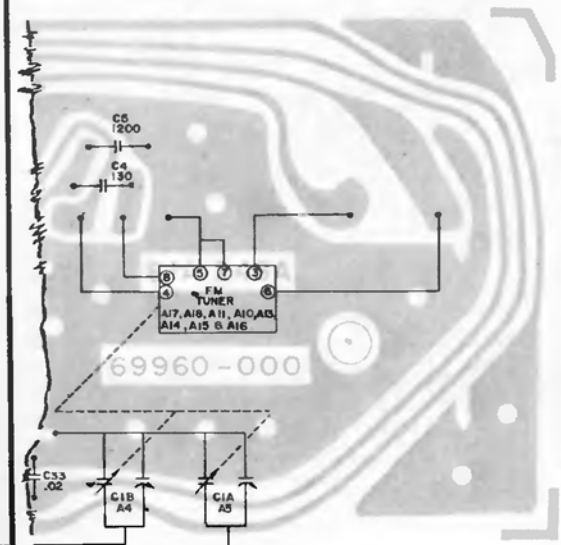


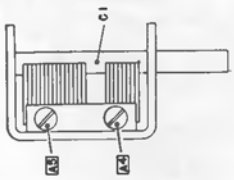


VARIABLE
SIDE VIEW

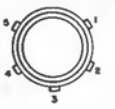

OSC. COIL L2

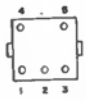


T1,2,3,4&5

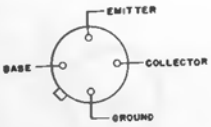


TR 2,3&4

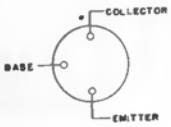


TR 1,5,6,7&8

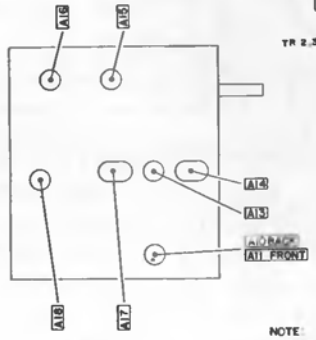


FM TUNER
BACK VIEW

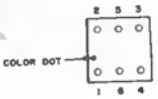


RATIO DETECTOR (T6)

NOTE:
C28, L3, & L4 LOCATED ON TUNER BRACKET.

(ALL ARE BOTTOM VIEWS)

ARVIN Models 17R17, 17R18, 57R07, 57R08, 57R17, 57R18, 57R25, 57R28

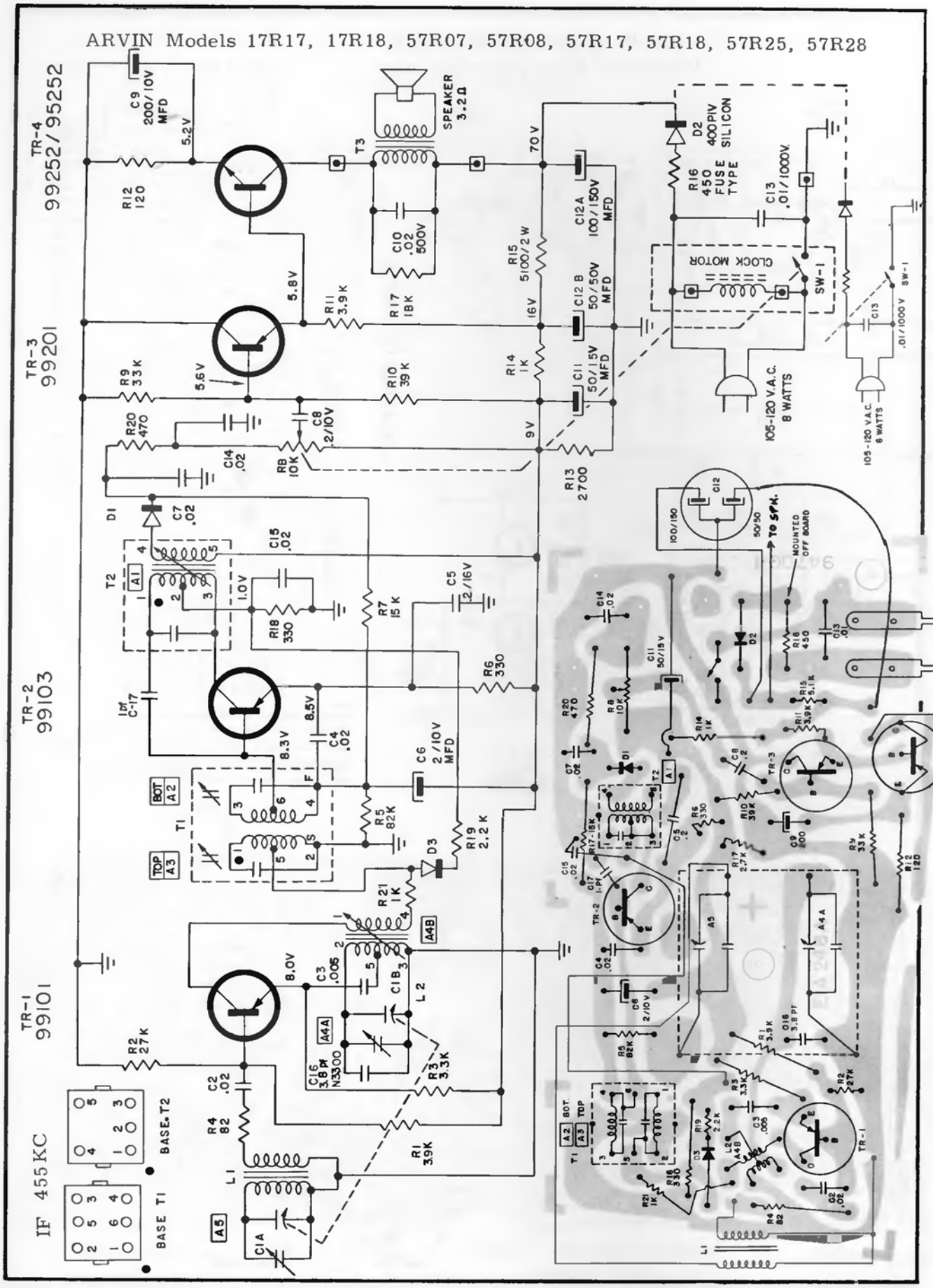

# ARVIN Models 55R77, 55R87

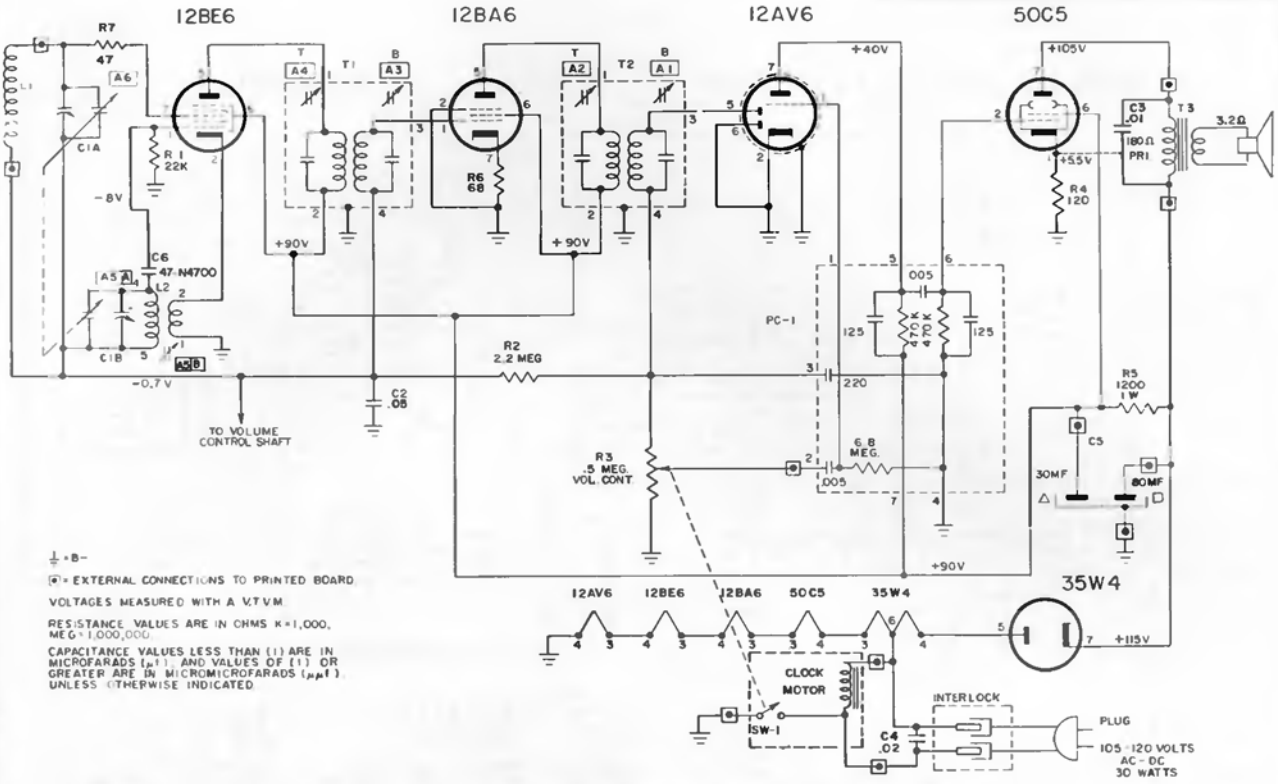


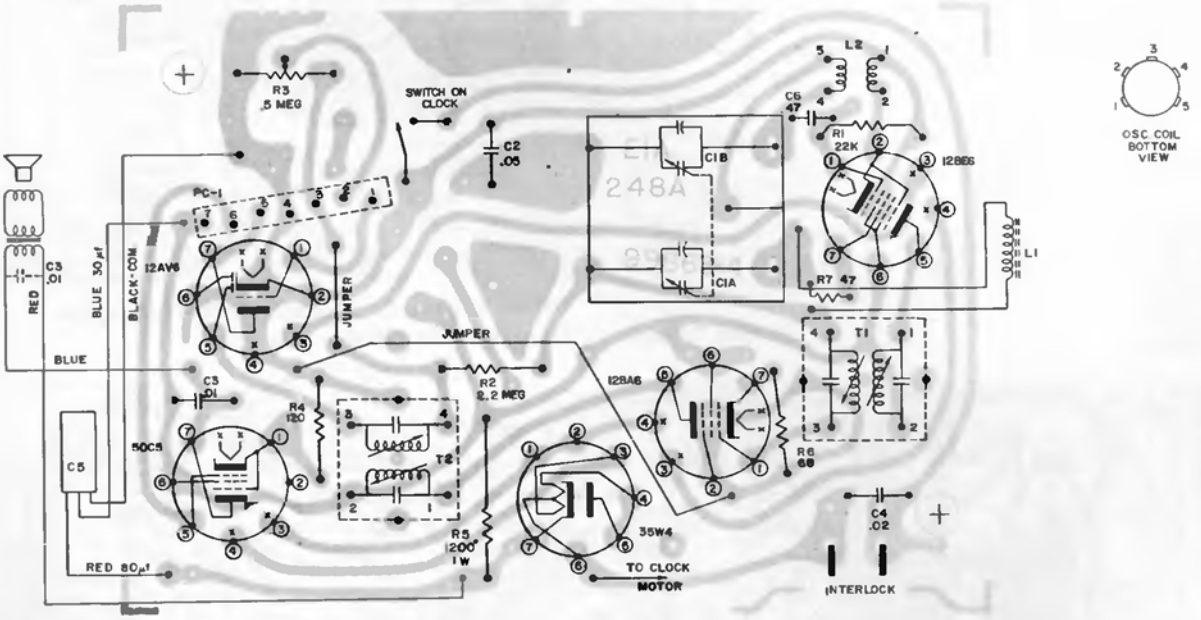


| Position of Variable | Frequency of Generator | Dummy Antenna | Generator Output Connection | Adj. Trimmer for Max. Output | Trimmer Function |
|---|---|---|---|---|---|
| Open | 455 Kc | .05 mfd. | Pin 7 of 12BE6 | A1, A2, A3, A4 | I. F. |
| Open | 1620 Kc | | *Test Loop | A5A | Oscillator |
| 1400 Kc | 1400 Kc | | *Test Loop | A6 | Antenna |
| 600 Kc | 600 Kc | | *Test Loop | Check Point | |
| Closed | 530 Kc | | *Test Loop | A5B | Oscillator |

Recheck A5A (1620 kc) after adjustment of A5B.
*Three (3) turns of wire 6" in diameter placed about one foot from the receiver antenna.

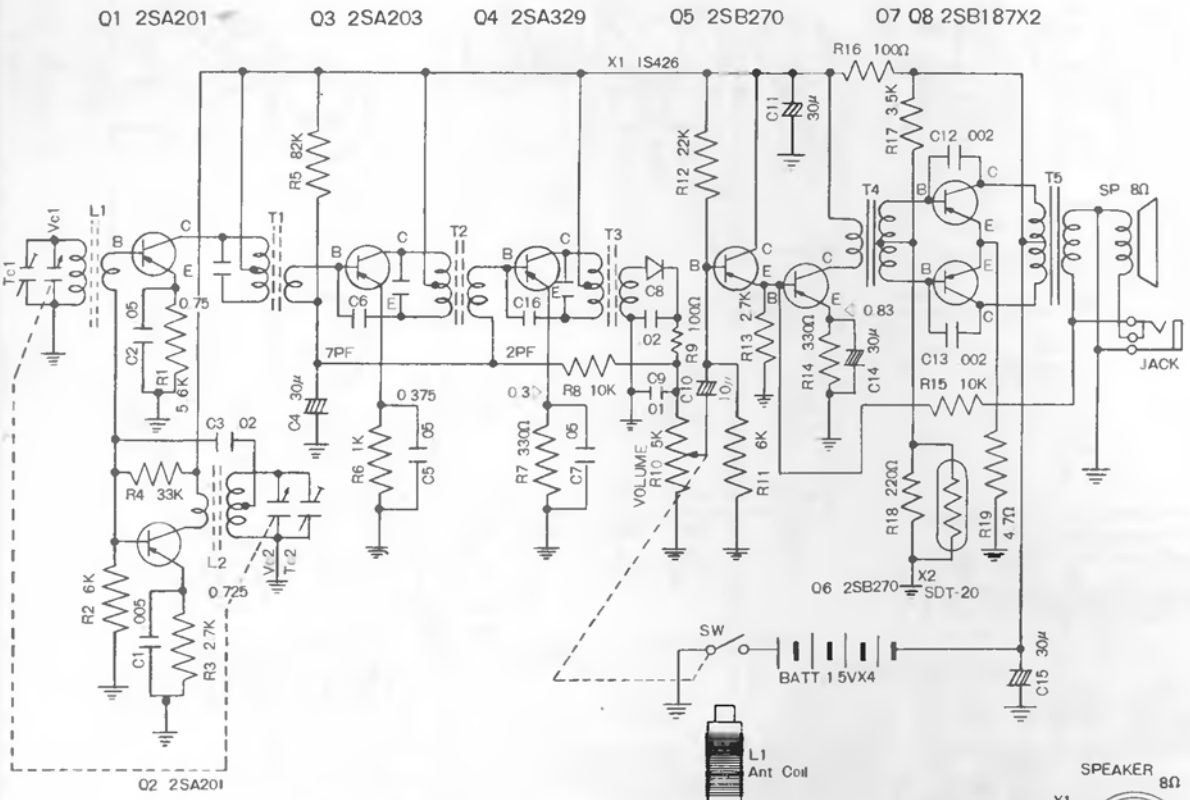


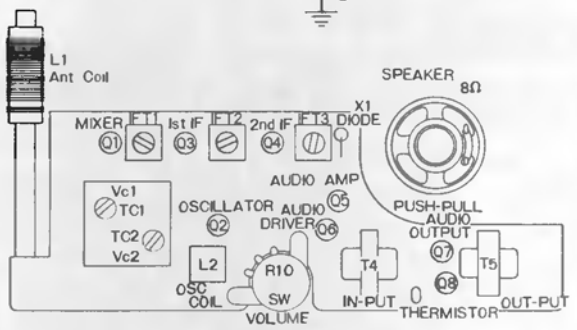


TRANSISTOR AND ALIGNMENT POINT LOCATION

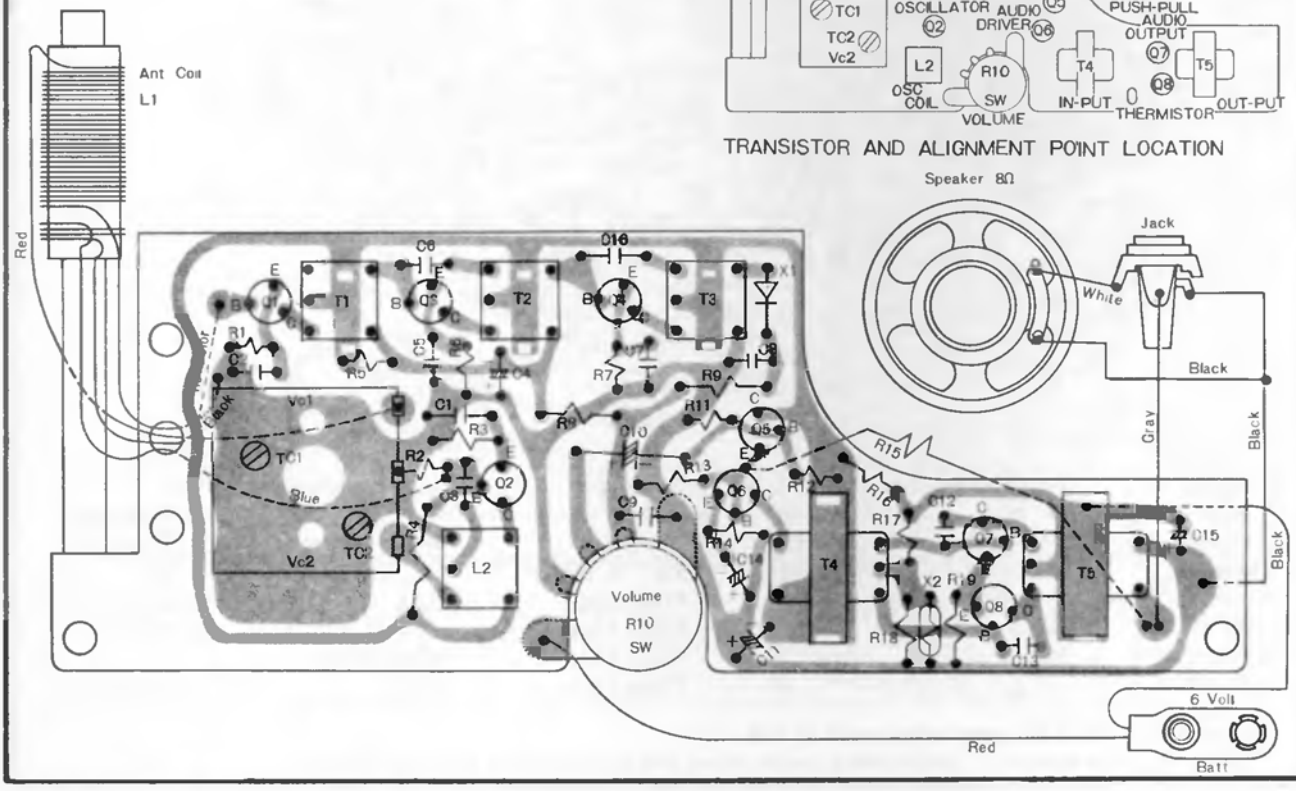

# EMERSON Model 31L18, Chassis 120583

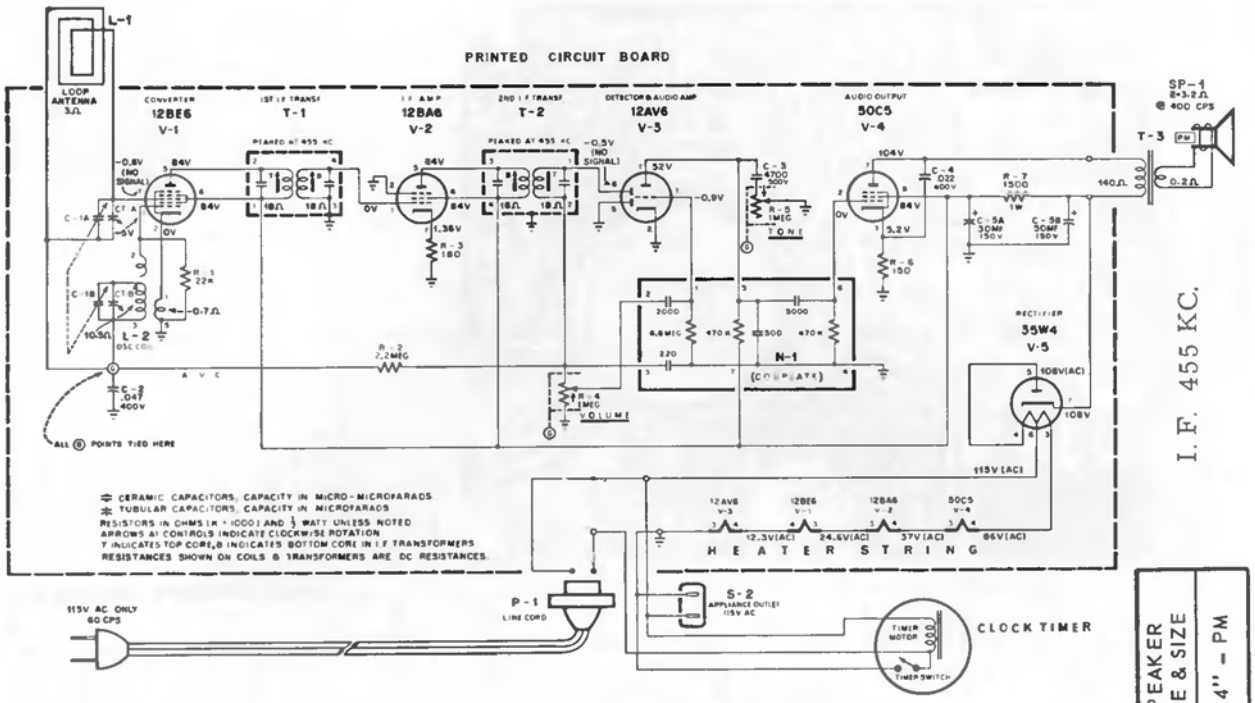


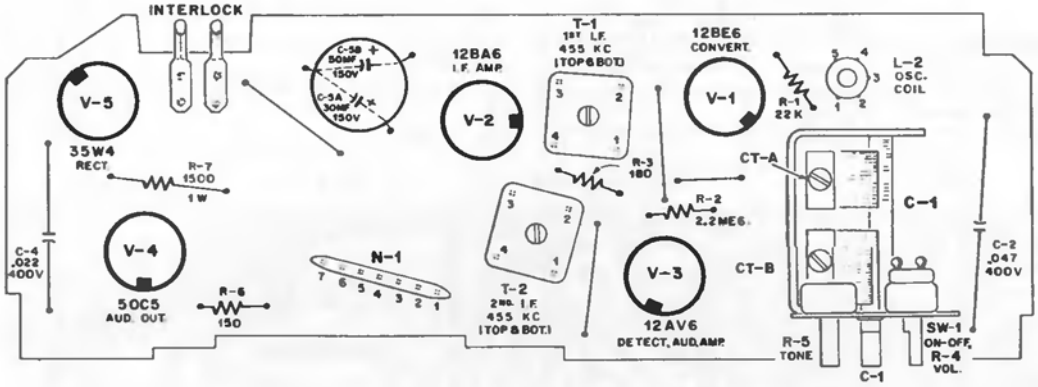


| MODEL NO. | CHASSIS NO. | TIMER PART NO. | SPEAKER TYPE & SIZE |
|---|---|---|---|
| 31L18 | 120583 | 471329 | 6 x 4" – PM |

TUBE LOCATIONS AND ALIGNMENT POINTS

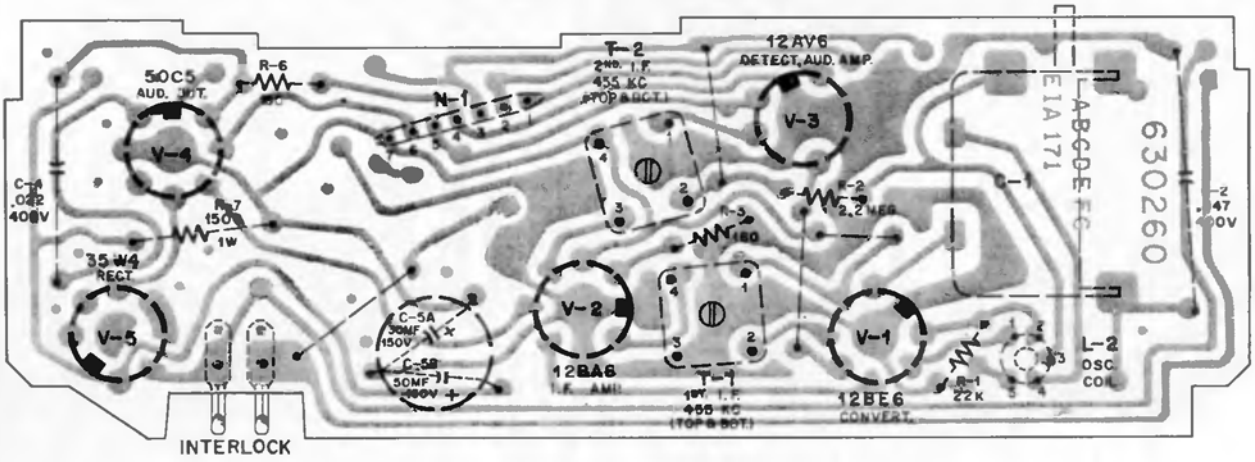


ETCHED PRINTED CIRCUIT CHASSIS (BOTTOM VIEW)

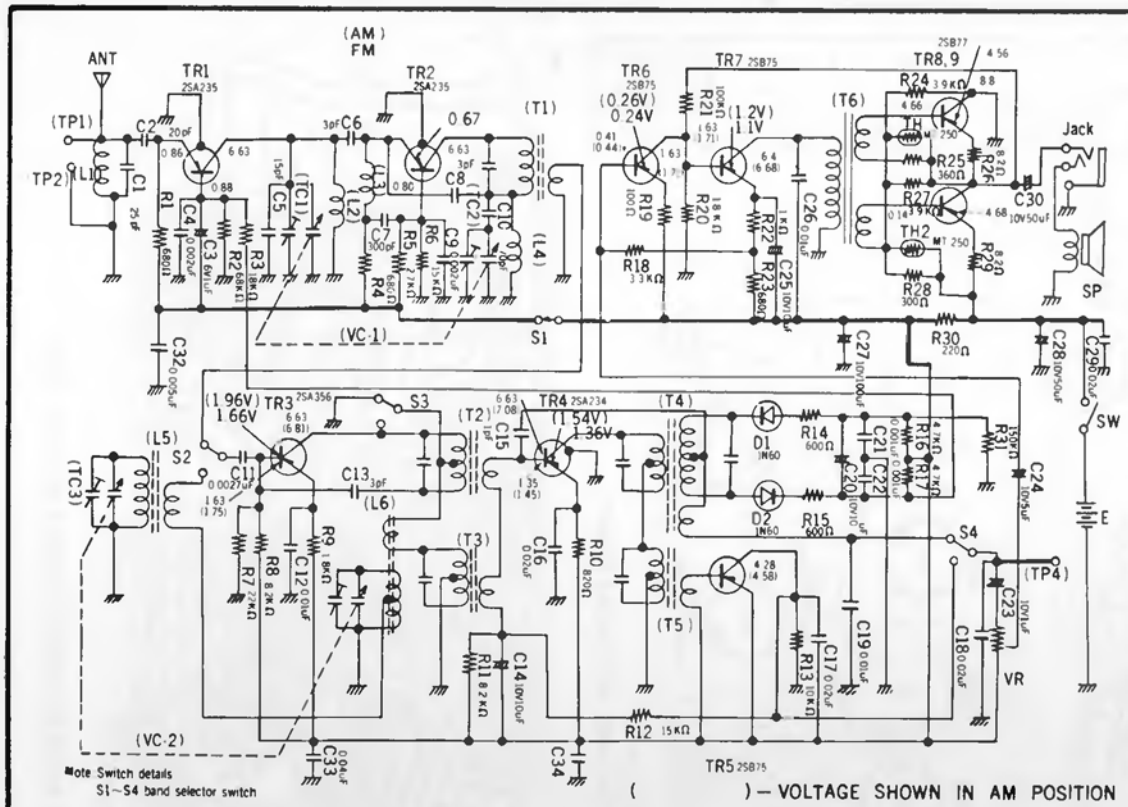


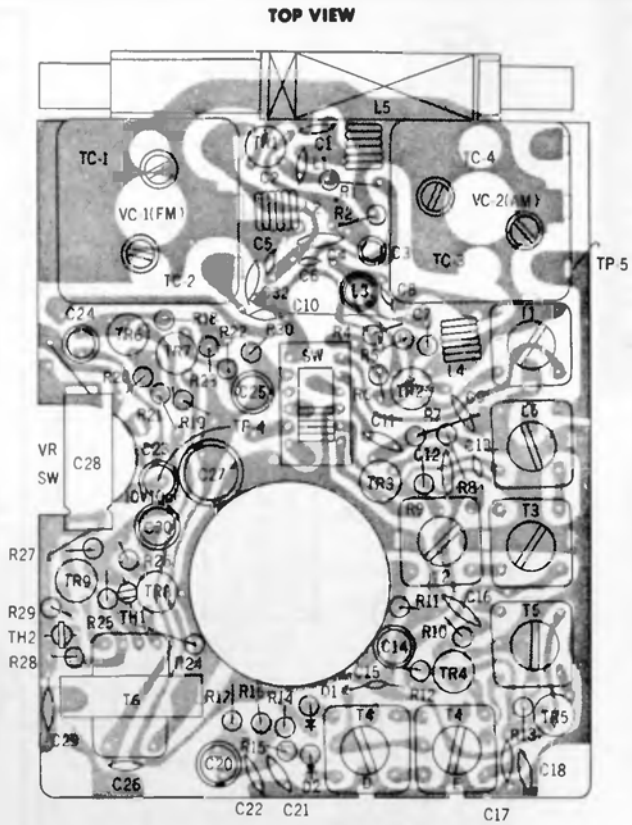


**VOLTAGE AND CURRENT AT ELEMENT OF TRANSISTOR**

| Symbol No. | TRANSISTOR | AM | | | | FM | | | |
|---|---|---|---|---|---|---|---|---|---|
| | | Ve(V) | Vb(V) | Vc(V) | Ie(mA) | Ve(V) | Vb(V) | Vc(V) | Ie(mA) |
| TR1 | 2SA235 | | | | | 0.86 | 0.88 | 6.63 | 1.27 |
| TR2 | 2SA234 | | | | | 0.67 | 0.80 | 6.63 | 1.0 |
| TR3 | 2SA350 | 1.96 | 1.75 | 6.81 | 1.09 | 1.66 | 1.63 | 6.63 | 0.92 |
| TR4 | 2SA234 | 1.54 | 1.45 | 7.08 | 1.88 | 1.36 | 1.35 | 6.63 | 1.66 |
| TR5 | 2SB75 | | | 4.58 | | | | 4.28 | |
| TR6 | 2SB75 | 0.26 | 0.44 | 1.71 | 2.6 | 0.24 | 0.41 | 1.64 | 2.4 |
| TR7 | 2SB75 | 1.2 | 1.71 | 6.68 | 1.2 | 1.1 | 1.63 | 6.4 | 1.1 |
| TR8 | 2SB77 | (VBE)0.15 | | | | (VBE)0.15 | 4.66 | 8.8 | |
| TR9 | 2SB77 | (VBE)0.15 | | | | (VBE)0.15 | 0.14 | 4.68 | |

**LOCAL OSCILLATOR VOLTAGES**

| SECTION | OSCILLATOR FREQ. | Min. Vosc(mV) | Max. Vosc(mV) |
|---|---|---|---|
| AM | 975 – 2105 KC | 150 | 180 |
| FM | 96.7 – 120.7 MC | 193 | 235 |

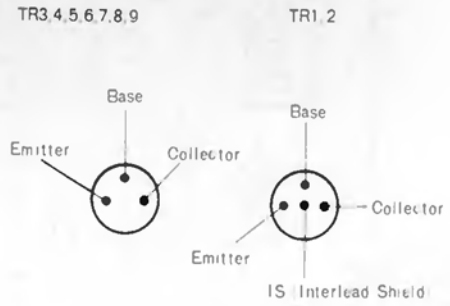


BOTTOM VIEW OF TRANSISTOR

# EMERSON Model 31P64

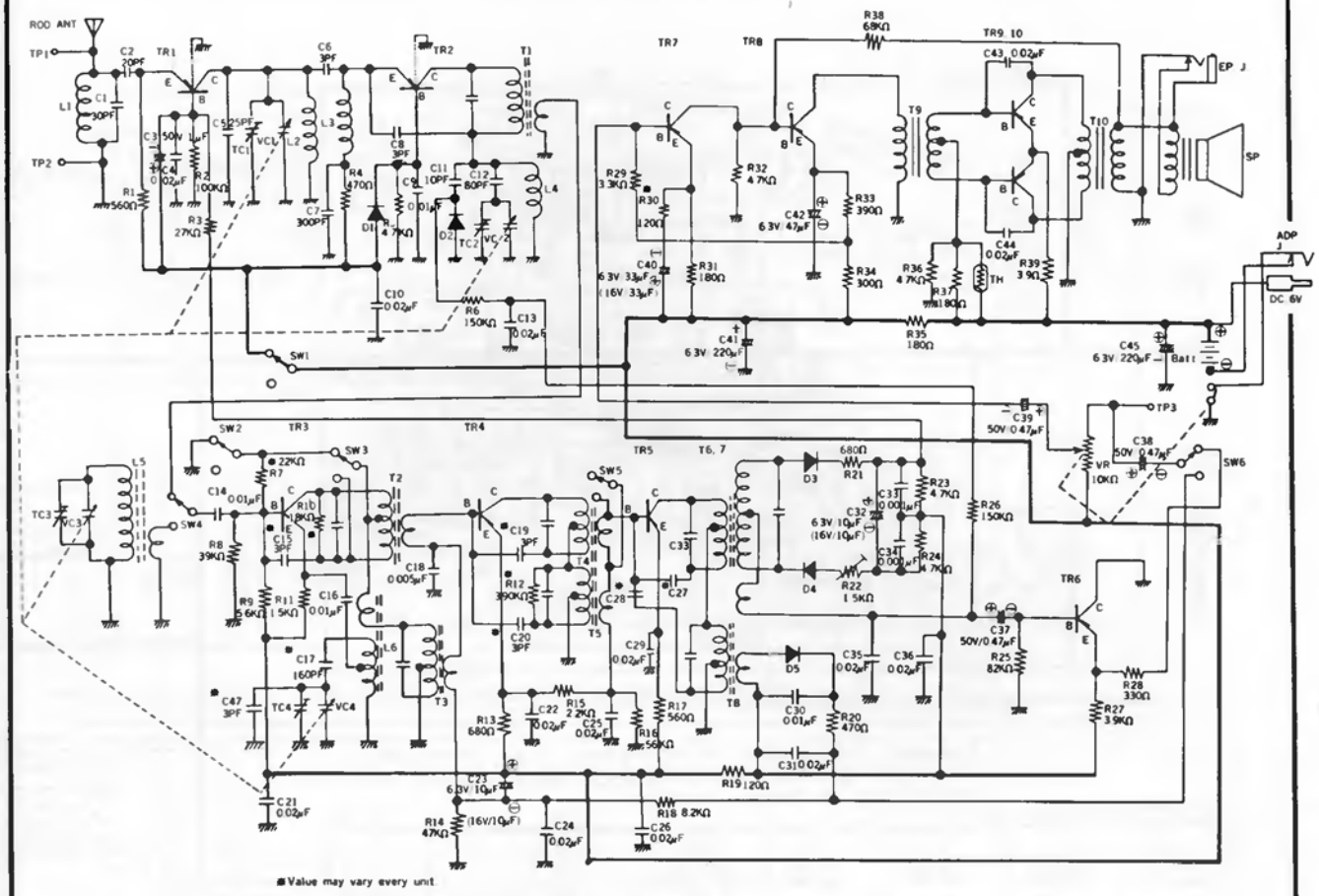


**BOTTOM VIEW**

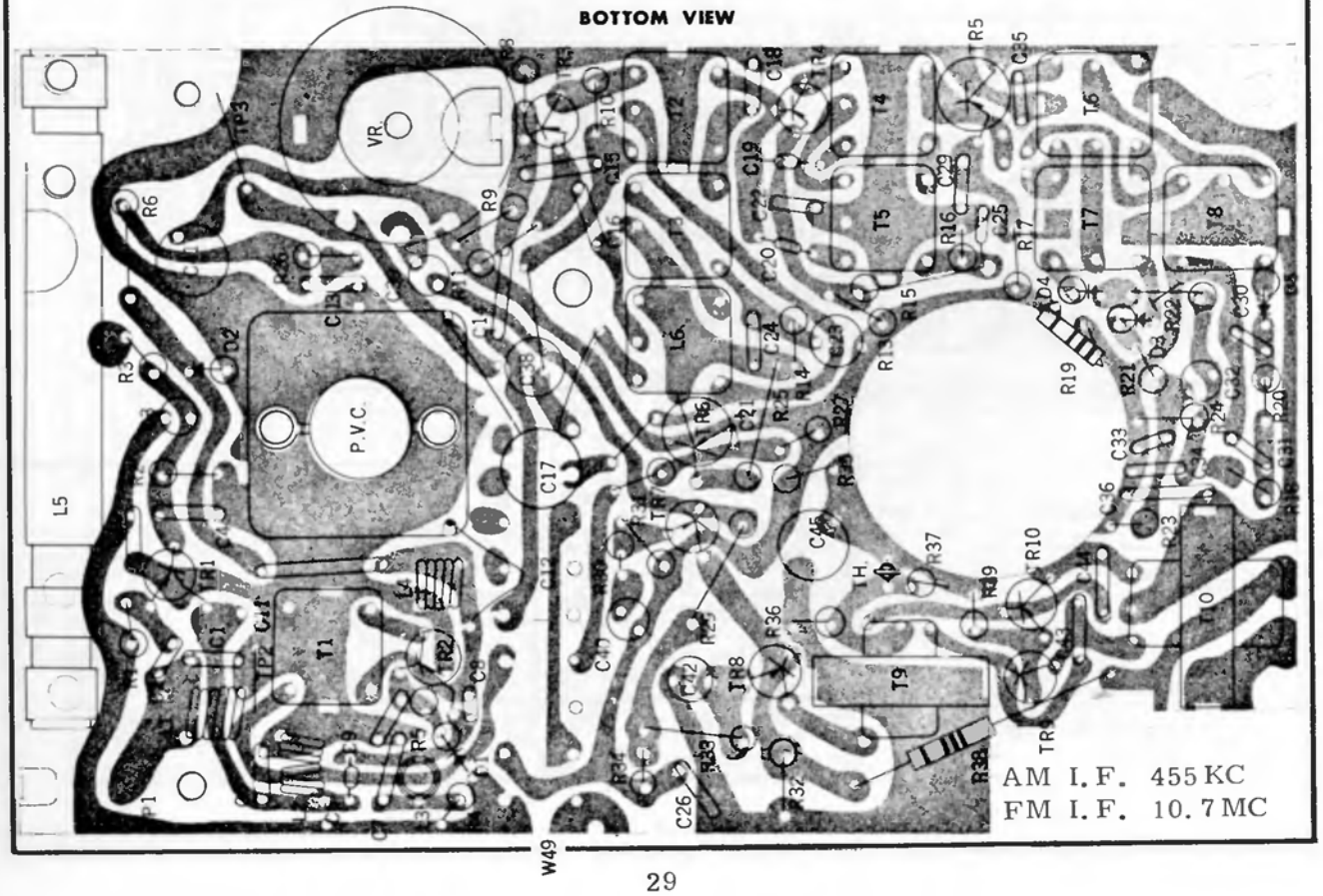


AM I.F. 455 KC
FM I.F. 10.7 MC

 (Continued on next page.)

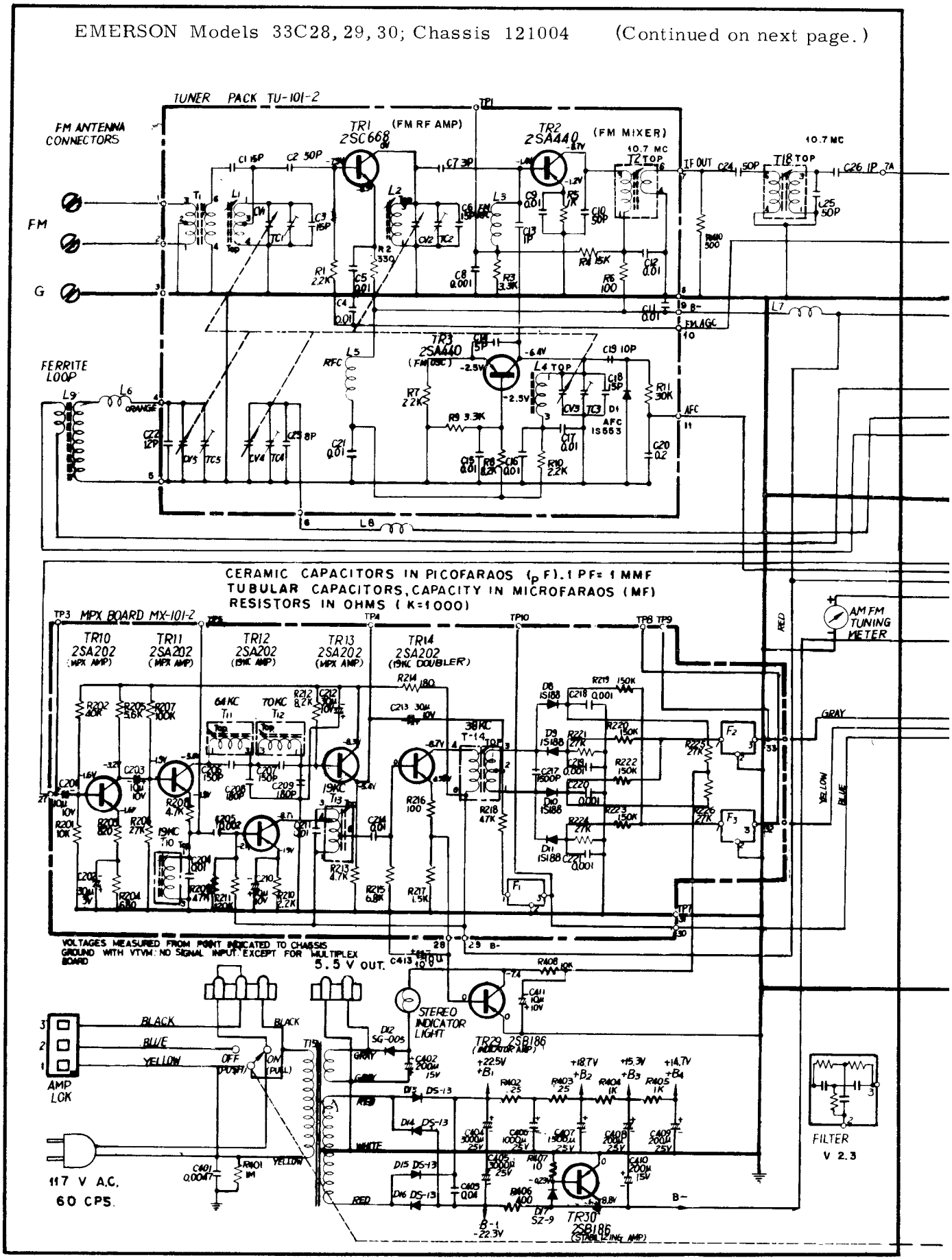

EMERSON Models 33C28, 29, 30; Chassis 121004

(Continued from preceding page.)

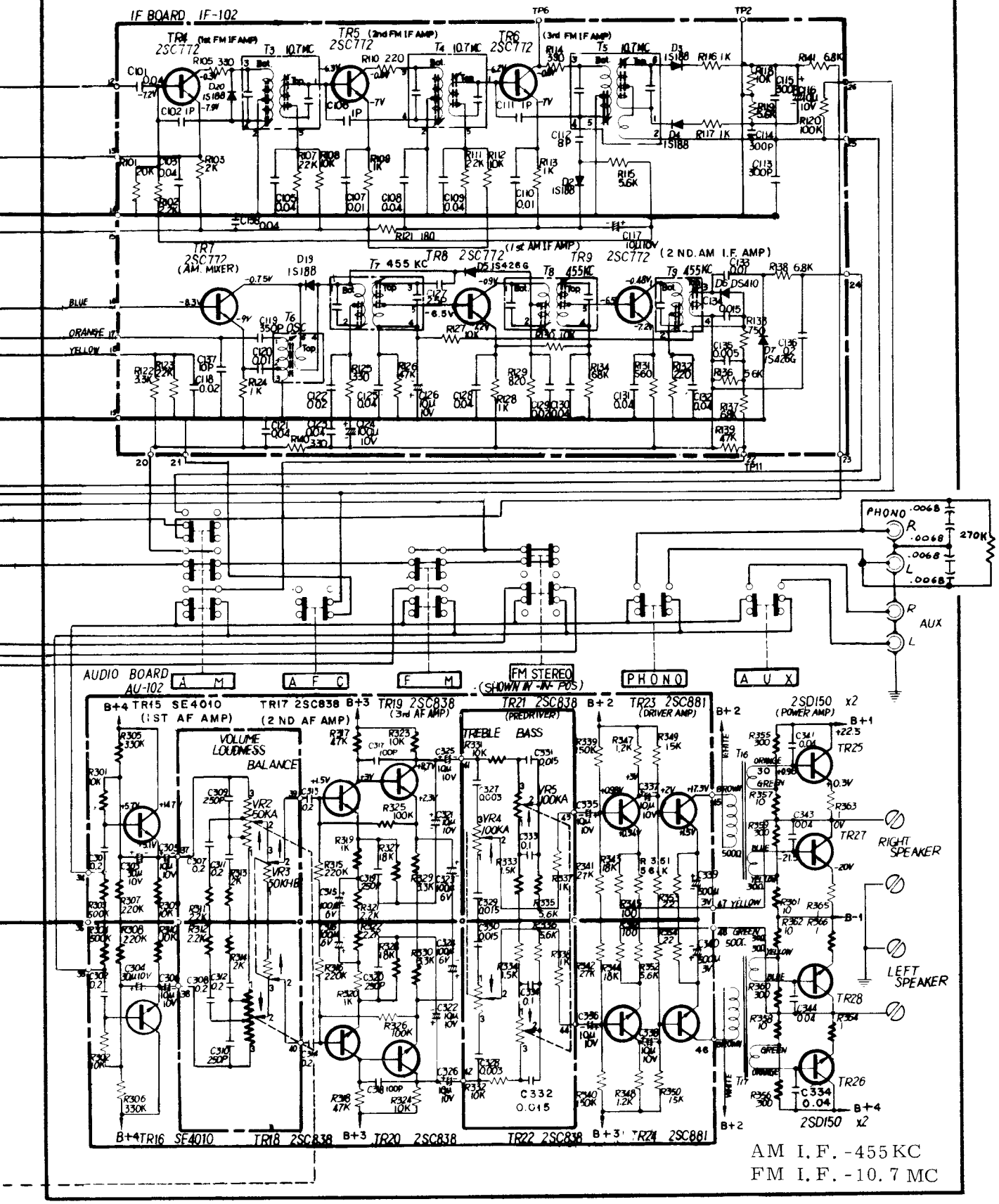


AM I.F. -455KC
FM I.F. -10.7 MC

# EMERSON Model 31P66

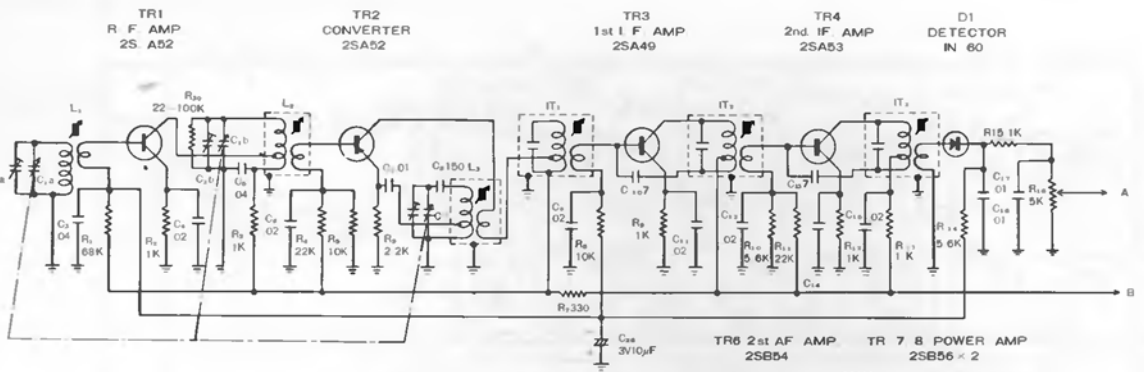


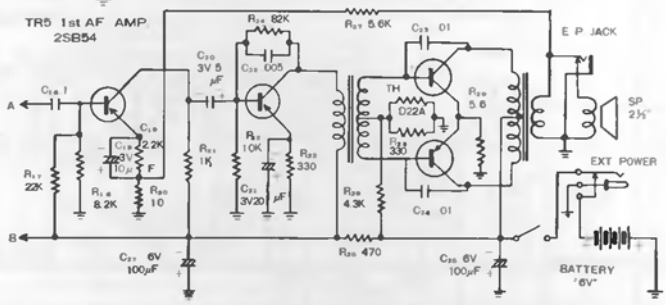


I. F. 455 KC

ALL RESISTANCE VALUES IN OHMS
ALL CAPACITANCE VALUES LESS THAN
1.0 IN MFD. VALUES ABOVE 1.0 IN MMFD
UNLESS OTHERWISE INDICATED

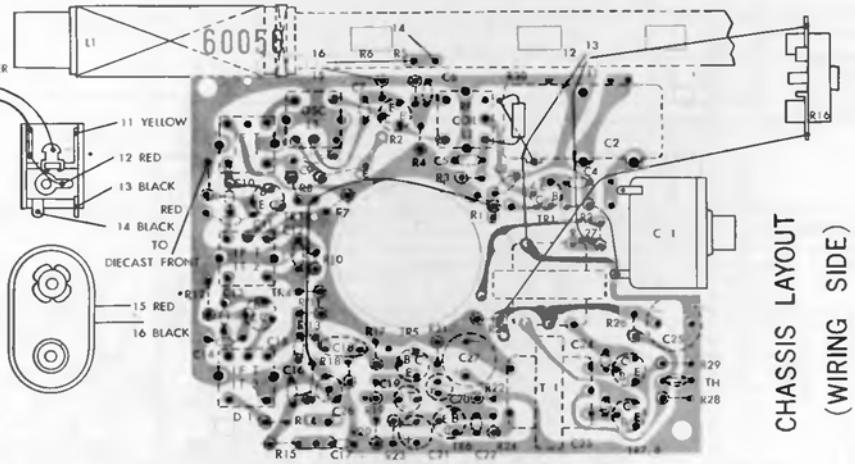


CHASSIS LAYOUT
(WIRING SIDE)

DIAL CORD ARRANGEMENT

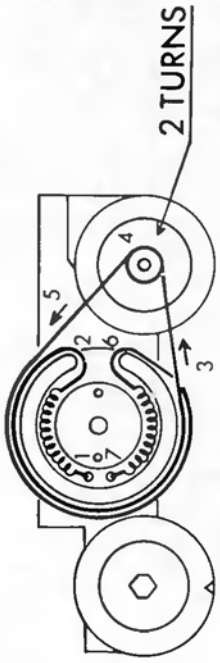


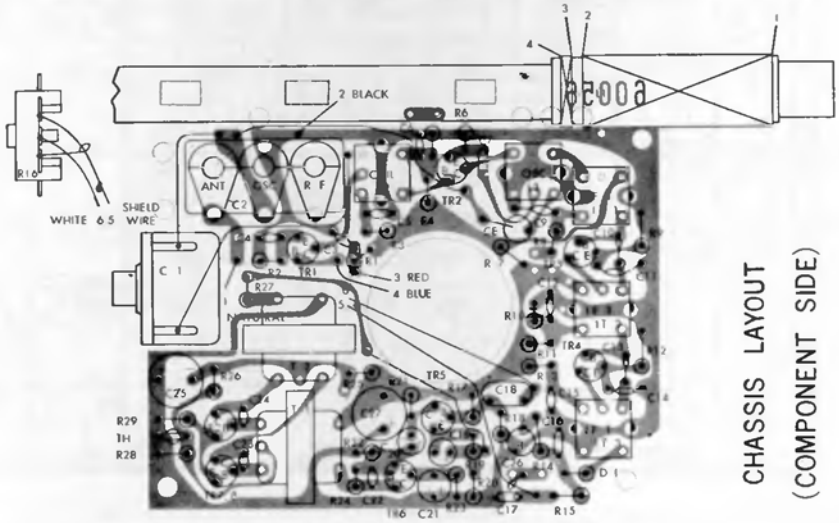


CHASSIS LAYOUT
(COMPONENT SIDE)

**GENERAL ELECTRIC** **T1170A; T1171A; T1172A**

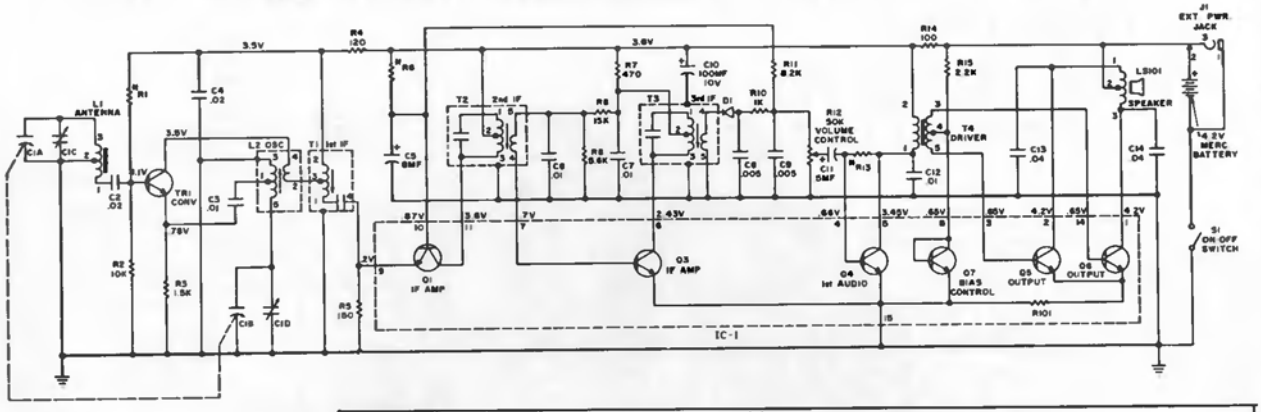


NOTES

1. UNLESS OTHERWISE NOTED CAPACITORS MORE THAN 1 = MMF CAPACITORS LESS THAN 1 = MF RESISTORS ARE 1/2 WATT, K = 1000
2. VOLTAGES ARE POSITIVE WITH RESPECT TO GROUND UNDER NO SIGNAL CONDITIONS AND VOLUME CONTROL MINIMUM.
3. SEE TRANSISTOR SUBSTITUTION CHART.
4. KHz = KC

ALIGNMENT

1. SET VOLUME CONTROL AT MAX. CONNECT OUTPUT METER OR SCOPE ACROSS SPEAKER. INDUCTIVELY COUPLE SIGNAL GENERATOR TO RECEIVER.
2. ADJUST T1, T2 AND T3 FOR MAX. 455KHz SIGNAL.
3. ADJUST C1D FOR MAX. 1630KHz WITH GANG OPEN.
4. ADJUST C1C FOR MAX. 1400KHz WHILE ROCKING GANG.
5. ADJUST L2 FOR MAX. 580KHz WHILE ROCKING GANG.
6. REPEAT STEPS 3, 4 AND 5 FOR MAX. SENSITIVITY.

BOTTOM VIEW OF COMPONENTS

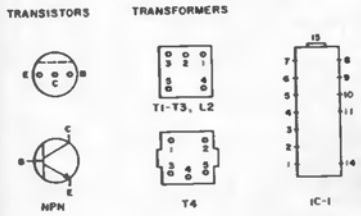


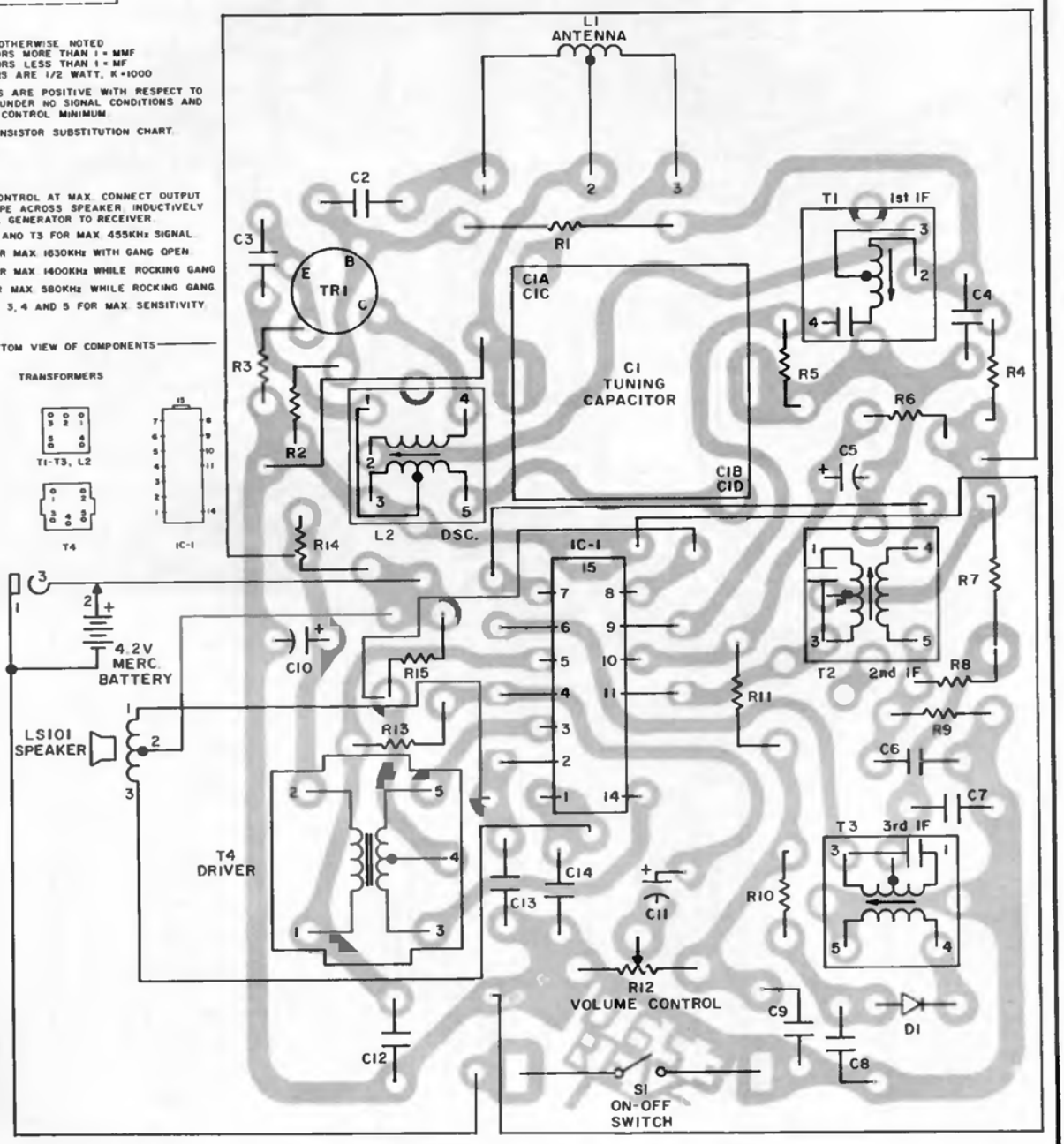


WIRING DIAGRAM (BOTTOM VIEW)

GENERAL ELECTRIC Models C550G, T1130B, T1151B, T1153B, T1175B, C1432C, C1460B, C1479B, C1480B, C1483C, C2415A, C2416A, C4403A, C4405A, C4410A.

WIRING DIAGRAM (BOTTOM VIEW)

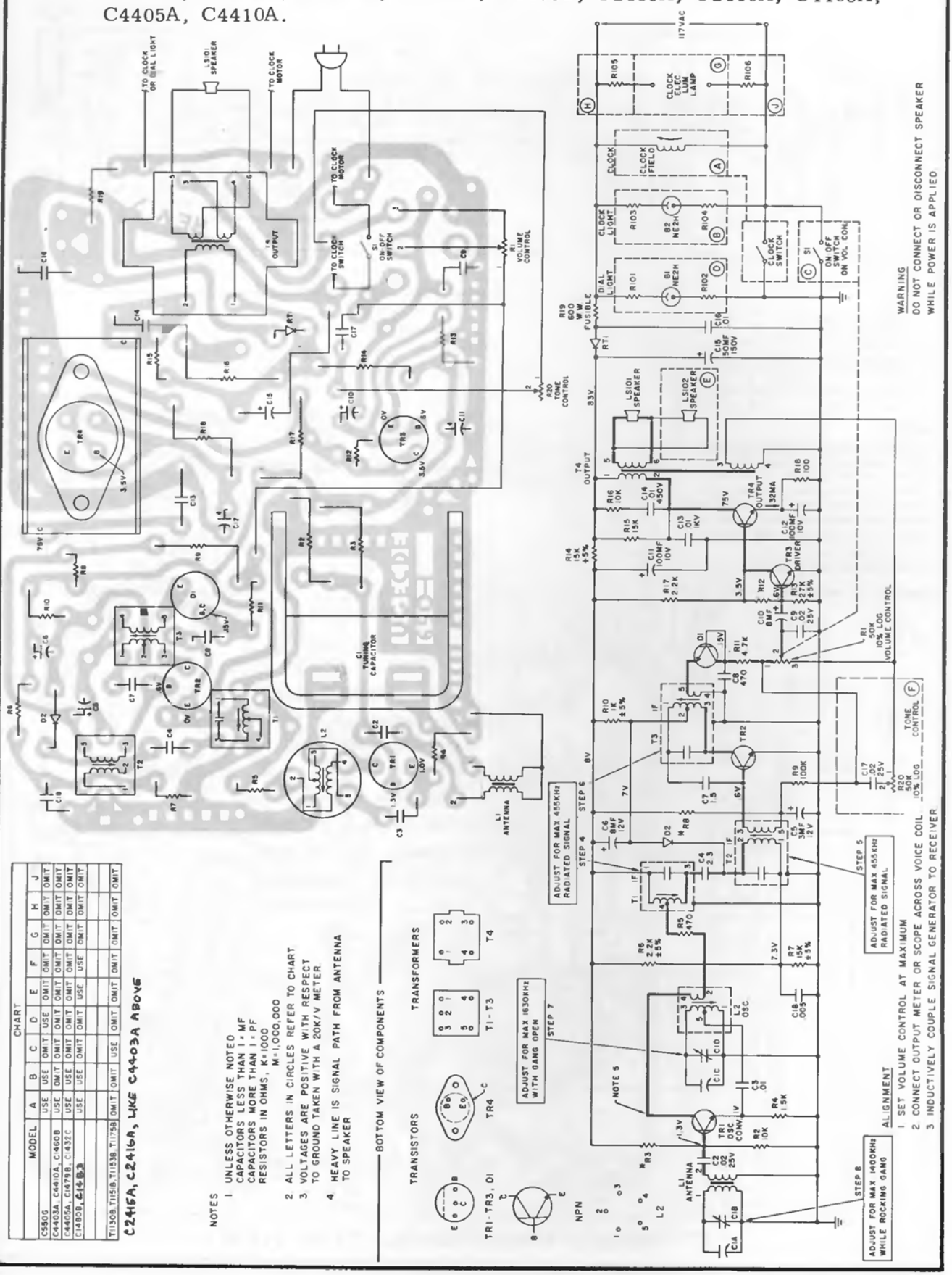


CHART

| MODEL | A | B | C | D | E | F | G | H | J |
|---|---|---|---|---|---|---|---|---|---|
| C550G | USE | USE | OMIT | USE | OMIT | OMIT | OMIT | OMIT | OMIT |
| C4403A, C4410A, C1460B | USE | OMIT | OMIT | OMIT | OMIT | OMIT | OMIT | OMIT | OMIT |
| C4405A, C1479B, C1432C | USE | USE | OMIT | OMIT | OMIT | OMIT | OMIT | OMIT | OMIT |
| C1480B, C1483C | USE | USE | OMIT | OMIT | USE | USE | OMIT | OMIT | OMIT |
| T1130B, T1151B, T1153B, T1175B | OMIT | OMIT | USE | OMIT | OMIT | OMIT | OMIT | OMIT | OMIT |

# GENERAL ELECTRIC Models T1134B, C4420A, C4421A, and C4430A.

WIRING DIAGRAM (BOTTOM VIEW)

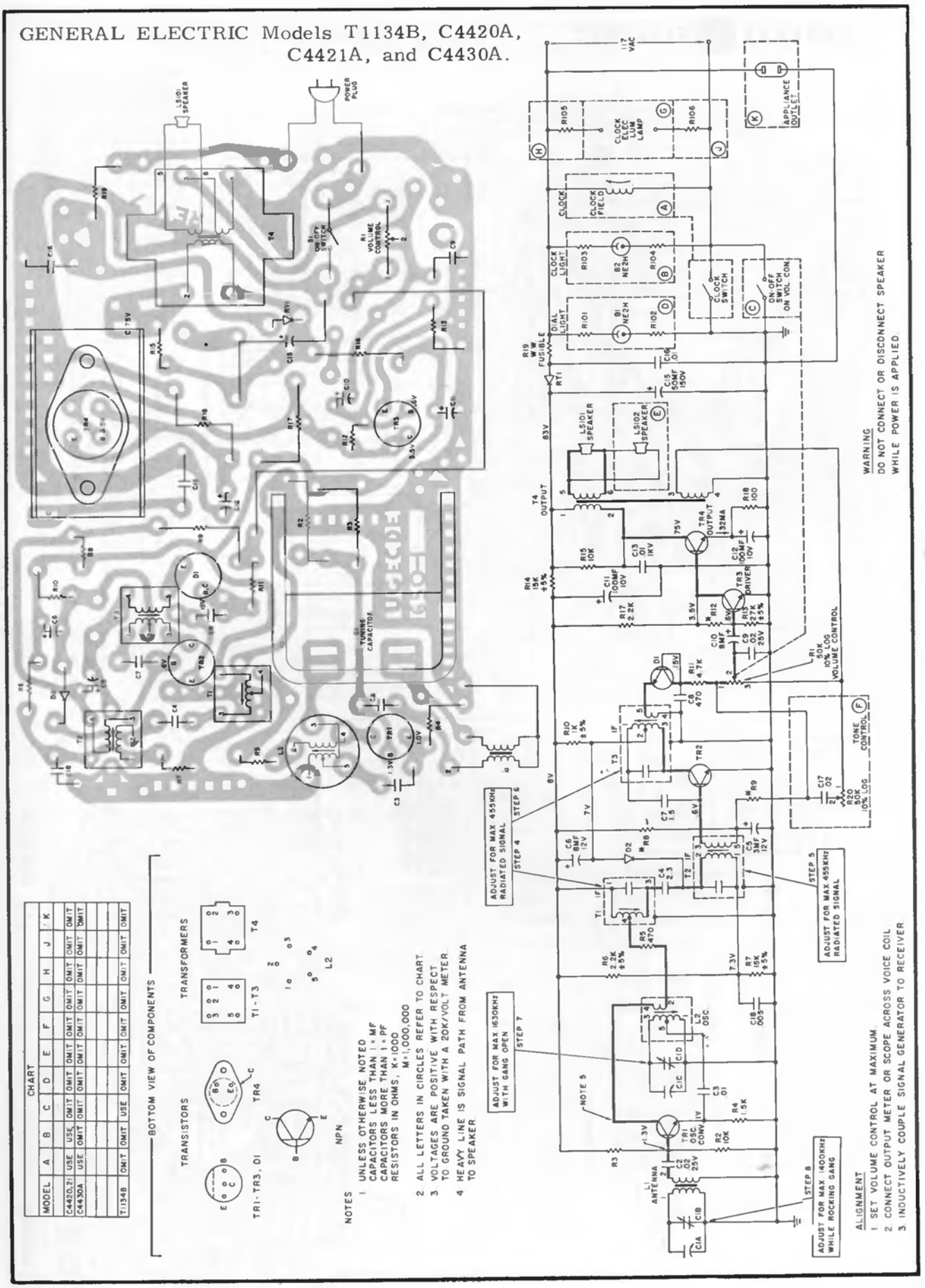

**GENERAL ELECTRIC** (For list of models see chart at right)

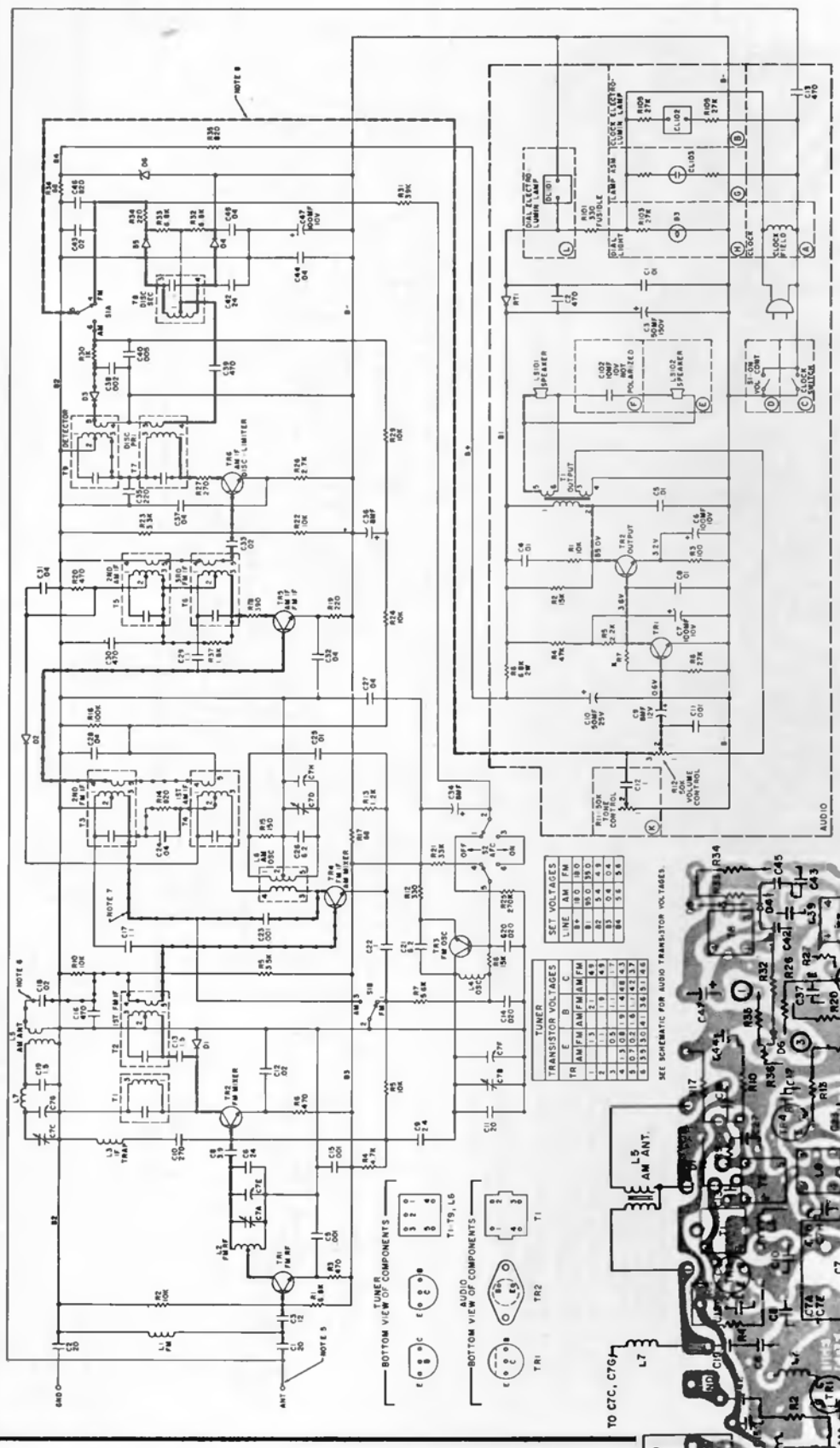


WIRING DIAGRAM (BOTTOM VIEW), LATE VERSION

# GENERAL ELECTRIC Models C1405A and T2100A

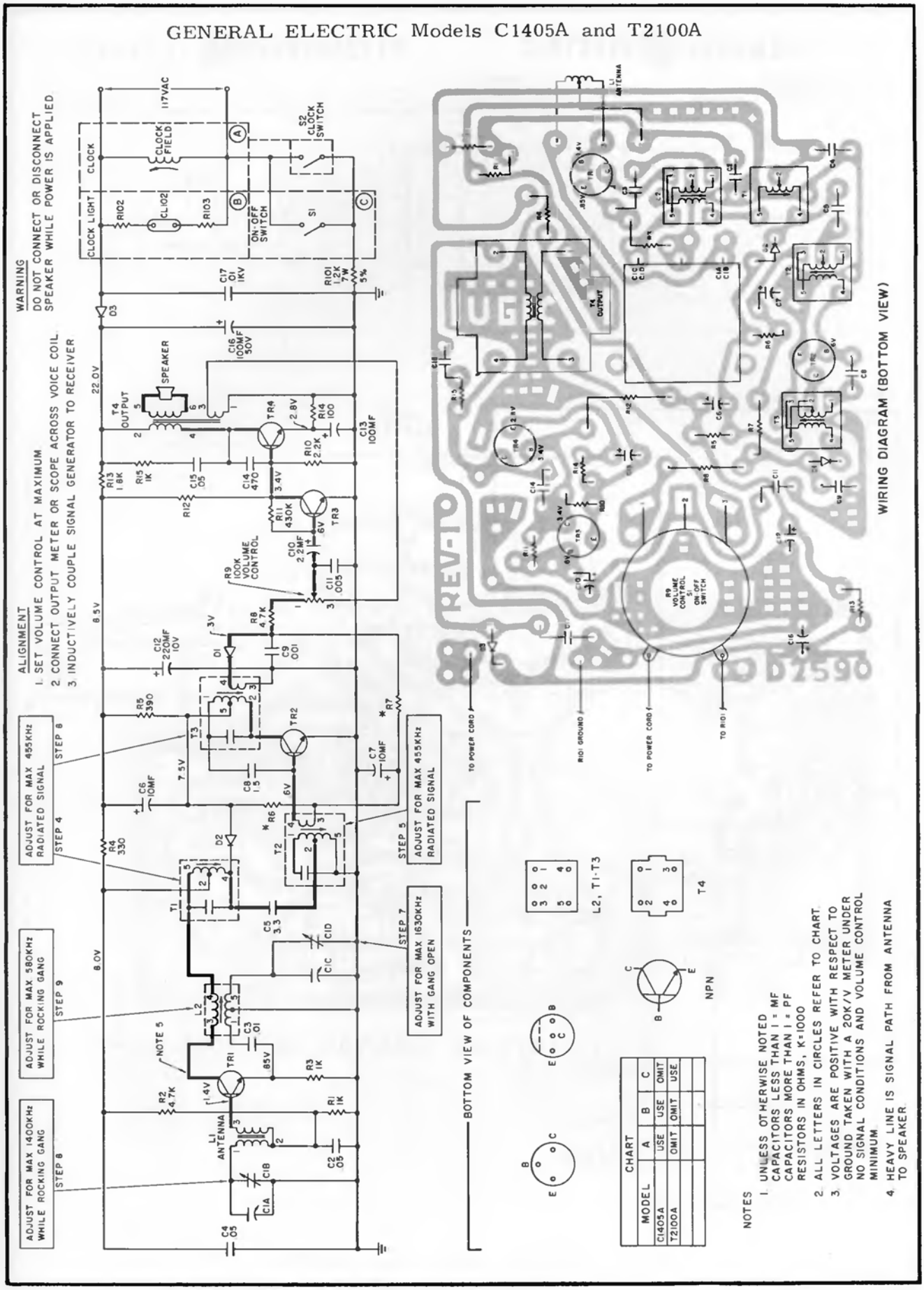

**GENERAL ELECTRIC** P1735A; P1739A

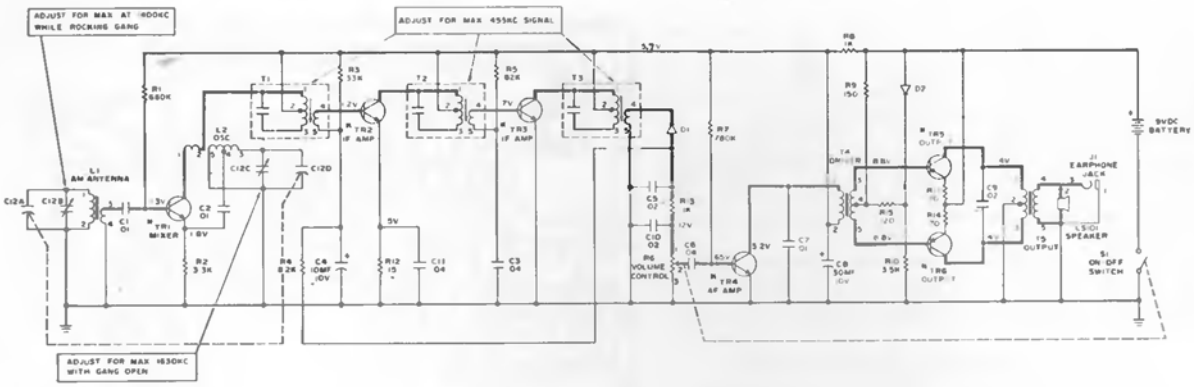


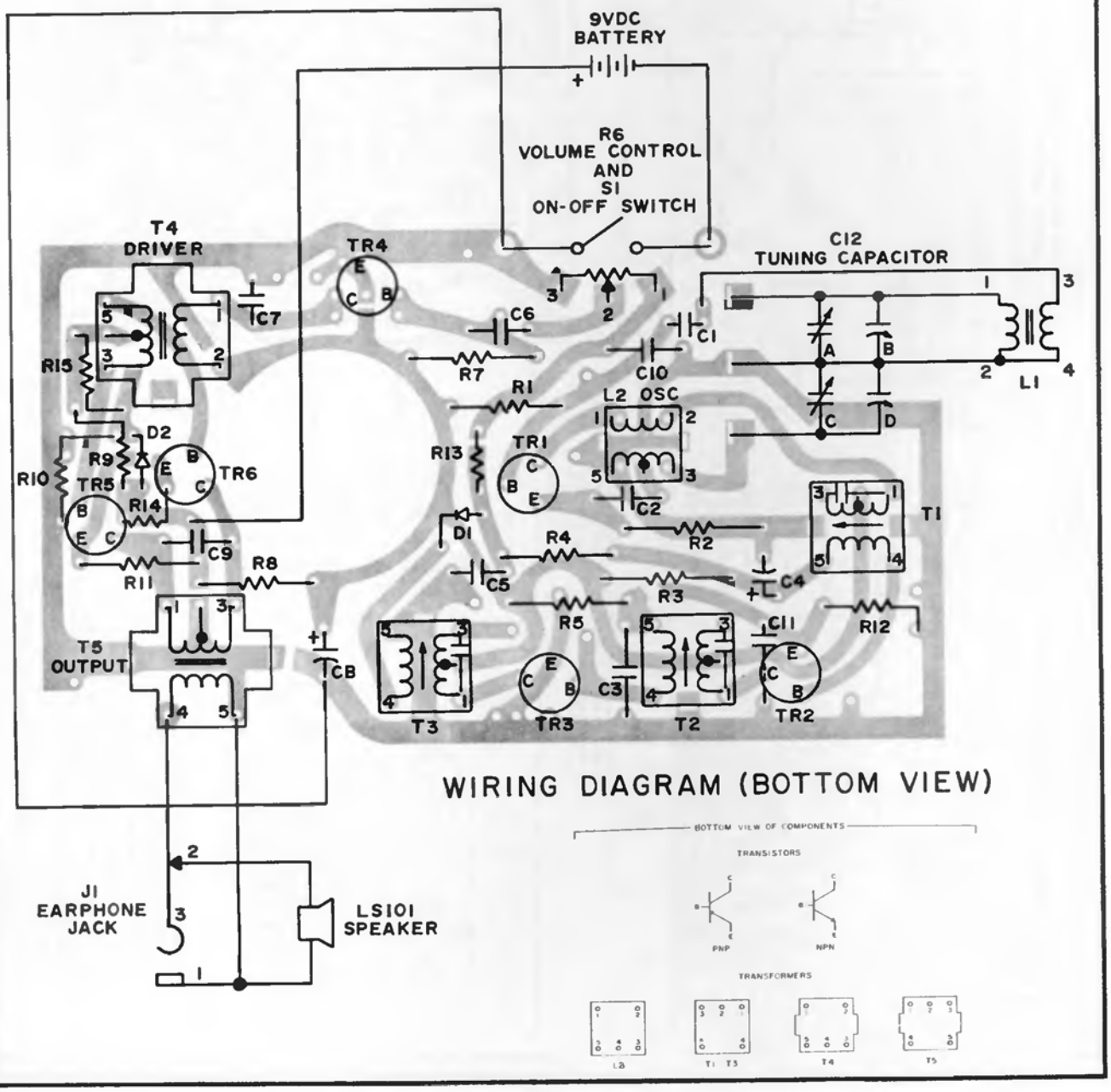

**GENERAL ELECTRIC** P1755A

ALIGNMENT

1. SET VOLUME CONTROL AT MAXIMUM CONNECT OUTPUT METER OR SCOPE ACROSS SPEAKER INDUCTIVELY COUPLE SIGNAL GENERATOR TO RECEIVER
2. ADJUST FOR MAXIMUM 455 KC SIGNAL
3. DO STEPS 3,4,5 REPEATING FOR MAXIMUM SENSITIVITY

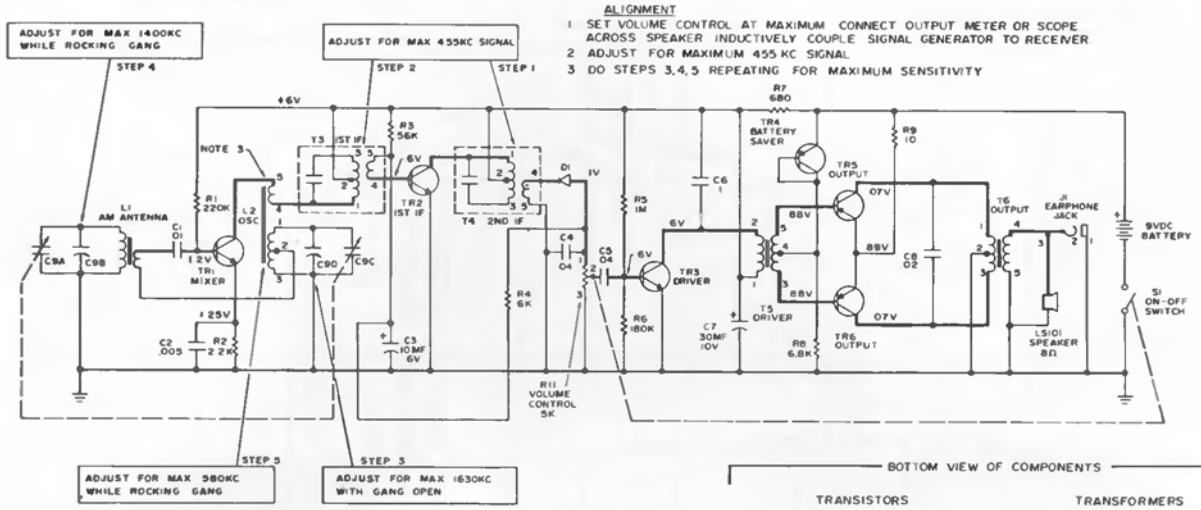


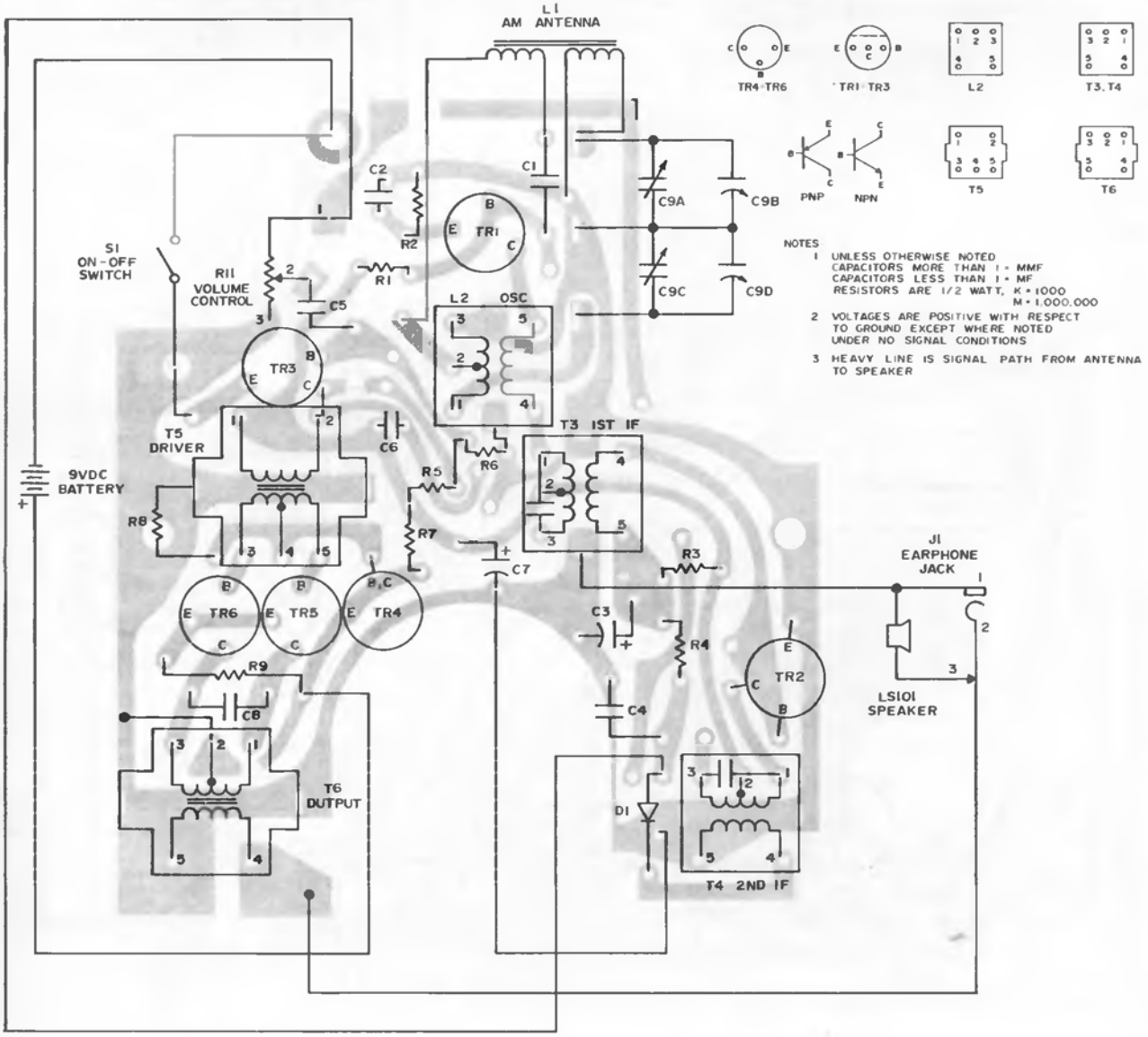


**WIRING DIAGRAM (BOTTOM VIEW)**

**GENERAL ELECTRIC** **P1760A; P1761A**

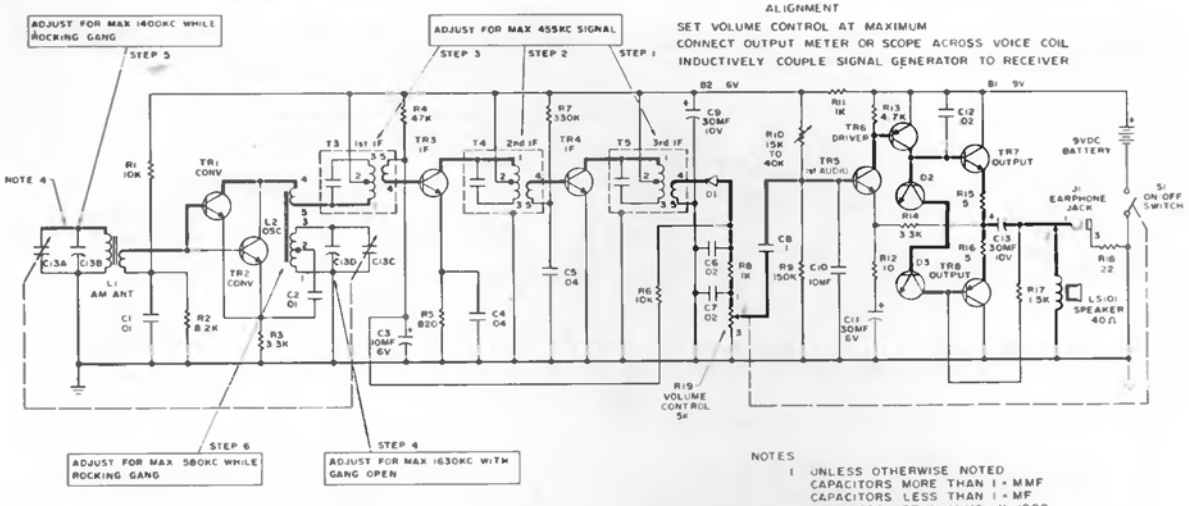


NOTES

1. UNLESS OTHERWISE NOTED
   CAPACITORS MORE THAN 1 = MMF
   CAPACITORS LESS THAN 1 = MF
   RESISTORS ARE IN OHMS, K = 1000
2. VOLTAGES ARE POSITIVE WITH RESPECT TO GROUND UNDER NO SIGNAL CONDITIONS AND VOLUME CONTROL MINIMUM

TRANSISTOR VOLTAGES

| TR | C | B | E |
|---|---|---|---|
| 1 | 6 | 2.7 | 2.15 |
| 2 | 6 | 2.7 | 2.15 |
| 3 | 6 | 1.0 | .33 |
| 4 | 6 | .7 | 0 |
| 5 | 8.4 | 5.4 | 4.9 |
| 6 | 4.8 | 8.4 | 9 |
| 7 | 9 | 4.8 | 4.3 |
| 8 | 0 | 3.5 | 4.2 |

BOTTOM VIEW OF COMPONENTS

TRANSISTORS — TRANSFORMERS

NPN — PNP

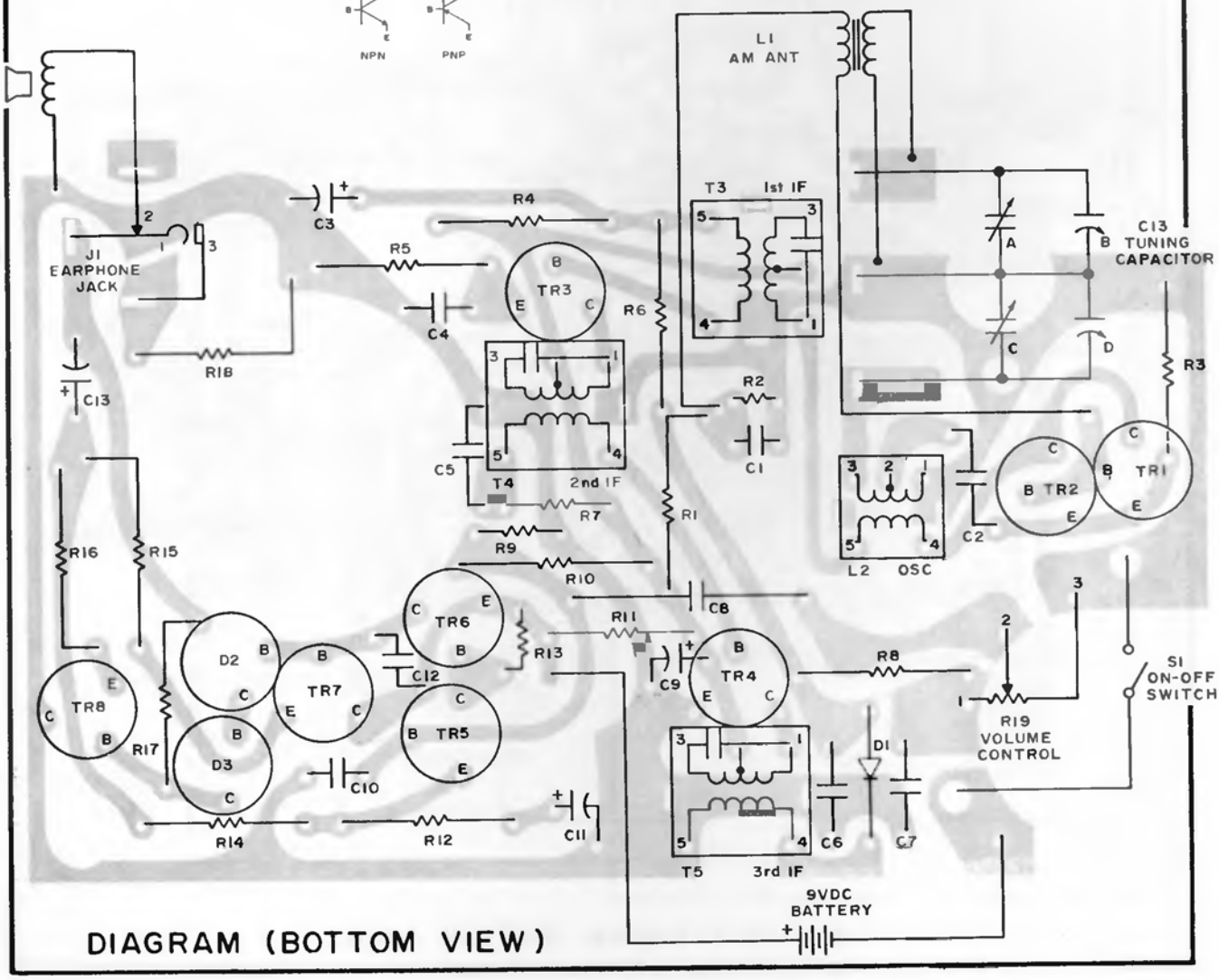


DIAGRAM (BOTTOM VIEW)

# GENERAL ELECTRIC

MODELS P1780, P1781, P1782

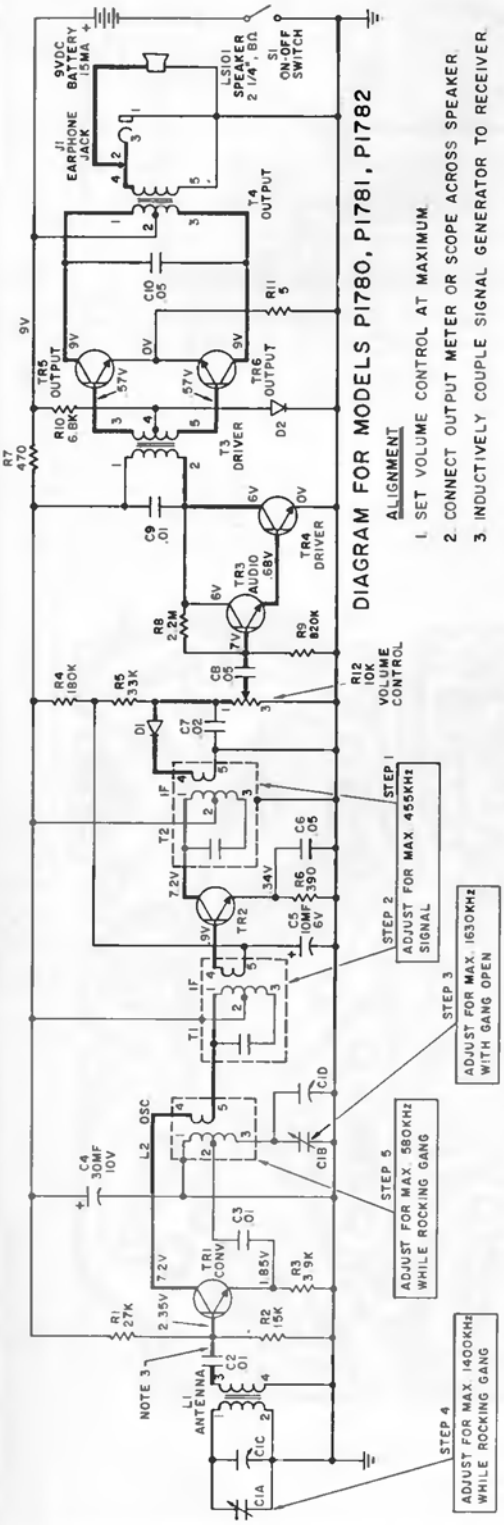


## DIAGRAM FOR MODELS P1780, P1781, P1782

ALIGNMENT

1. SET VOLUME CONTROL AT MAXIMUM.
2. CONNECT OUTPUT METER OR SCOPE ACROSS SPEAKER
3. INDUCTIVELY COUPLE SIGNAL GENERATOR TO RECEIVER.

| TRANSISTOR VOLTAGES | | | |
|---|---|---|---|
| TR | E | B | C |
| 1 | 1.85 | 2.35 | 7.2 |
| 2 | .34 | .9 | 7.2 |
| 3 | .68 | .7 | 6.0 |
| 4 | 0 | .68 | 6.0 |
| 5 | 0 | .57 | 9.0 |
| 6 | 0 | .57 | 9.0 |
| | | | |
| | | | |

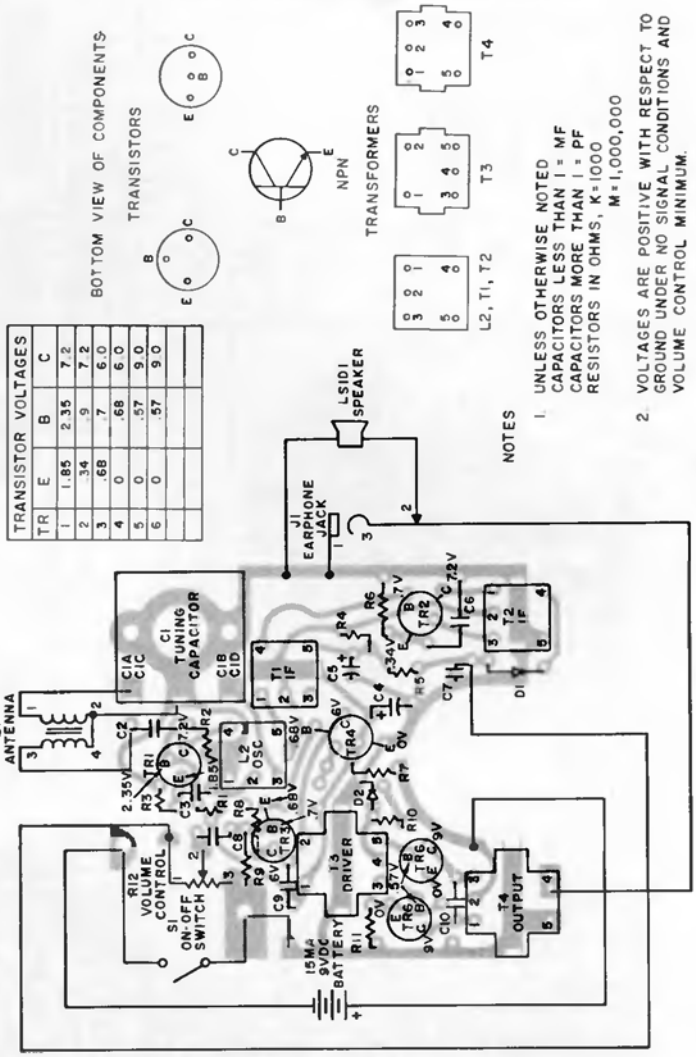


NOTES

1. UNLESS OTHERWISE NOTED
   CAPACITORS LESS THAN 1 = MF
   CAPACITORS MORE THAN 1 = PF
   RESISTORS IN OHMS, K=1000
   M=1,000,000
2. VOLTAGES ARE POSITIVE WITH RESPECT TO GROUND UNDER NO SIGNAL CONDITIONS AND VOLUME CONTROL MINIMUM.
3. HEAVY LINE IS SIGNAL PATH FROM ANTENNA TO SPEAKER.

WIRING DIAGRAM (BOTTOM VIEW)

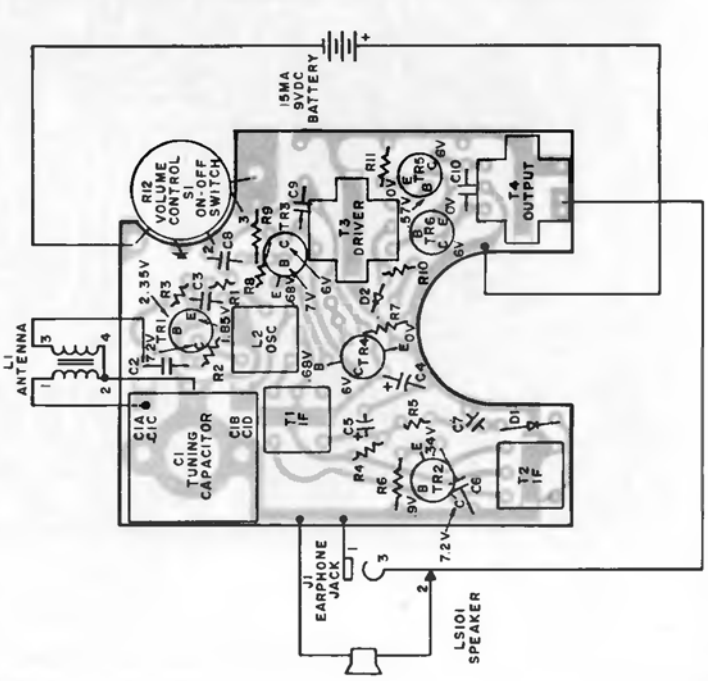


COMPONENT LAYOUT (TOP VIEW)

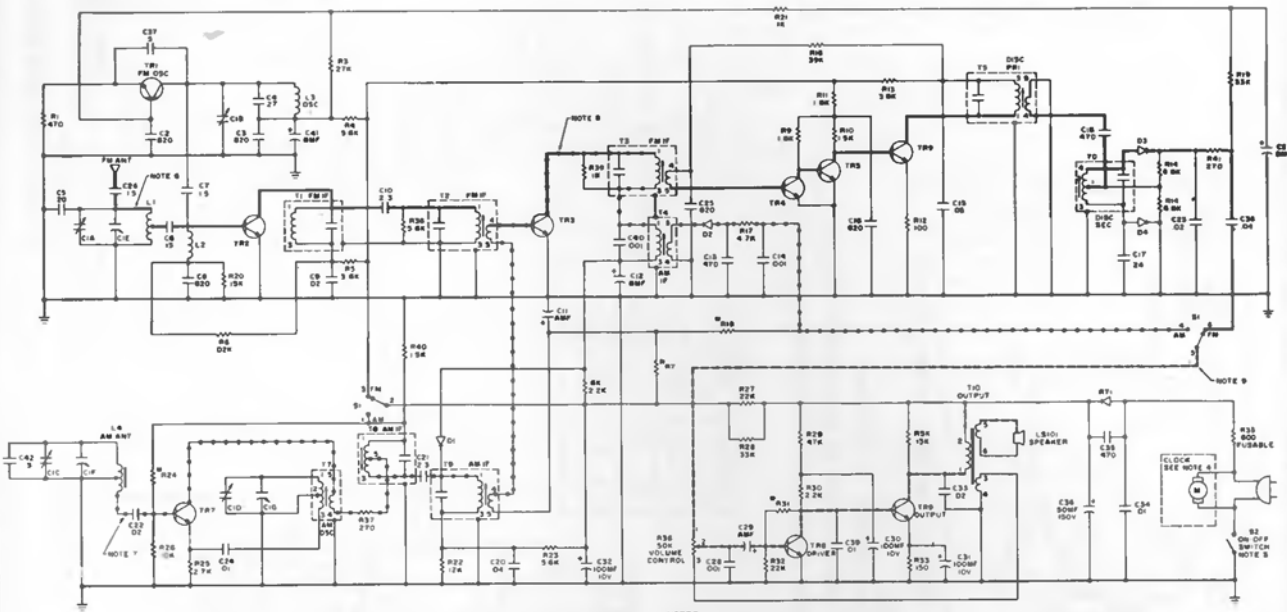

BOTTOM VIEW OF COMPONENTS


| TRANSISTOR VOLTAGES | | | | | | | | |
|---|---|---|---|---|---|---|---|---|
| TR | E | | B | | C | | | |
| | FM | AM | FM | AM | FM | AM | | |
| 1 | 3.1 | 0 | 8.7 | 0 | 2.4 | 4.0 | | |
| 2 | 0 | 0 | 6.7 | 0 | 5.24 | 0 | | |
| 3 | 0 | 0 | 7.3 | 7.2 | 3.70 | 3.60 | | |
| 4 | 0 | 0 | 7.3 | 0 | 7 | 0 | | |
| 5 | 0 | 0 | 7 | 0 | 6.1 | 0 | | |
| 6 | 1 | 0 | 6.1 | 0 | 2.53 | 0 | | |
| 7 | 0 | 1.20 | 0 | 1.53 | 0 | 4.11 | | |
| 8 | 0 | 0 | 5.8 | 5.8 | 4.38 | 4.55 | | |
| 9 | 3.84 | 3.85 | 4.34 | 4.34 | 3.59 | 3.61 | | |

NOTES

1. UNLESS OTHERWISE NOTED CAPACITORS LESS THAN 1 - MF CAPACITORS MORE THAN 1 - MMF RESISTORS IN OHMS, K=1000
2. VOLTAGES ARE POSITIVE WITH RESPECT TO GROUND UNDER NO SIGNAL CONDITIONS AND VOLUME CONTROL MINIMUM
3. REFER TO TRANSISTOR SUBSTITUTION CHART
4. USED ON CLOCK SETS ONLY
5. S2 IS INTEGRAL WITH CLOCK ON CLOCK SETS S2 IS INTEGRAL WITH R36 ON TABLE SETS
6. LINE SHOWN (▬) IS FM SIGNAL PATH FROM FM ANTENNA TO S1-6
7. LINE SHOWN (—•—) IS AM SIGNAL PATH FROM AM ANTENNA TO S1-4
8. SIGNAL PATHS SUPERIMPOSED IN SOME AREAS (▬)
9. LINE SHOWN (—•—) IS COMMON AUDIO PATH FROM S1-5 TO SPEAKER

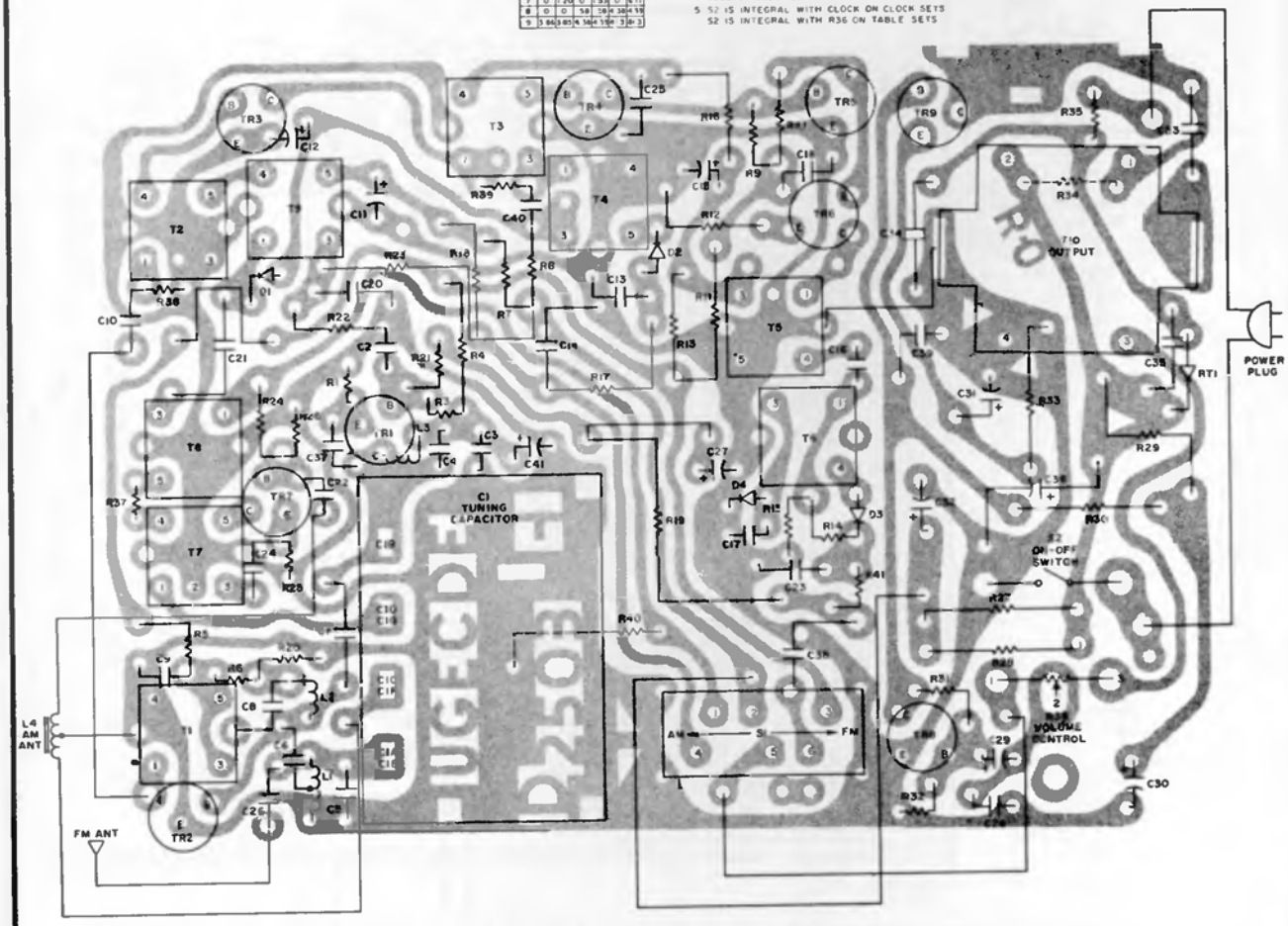


WIRING DIAGRAM (BOTTOM VIEW)

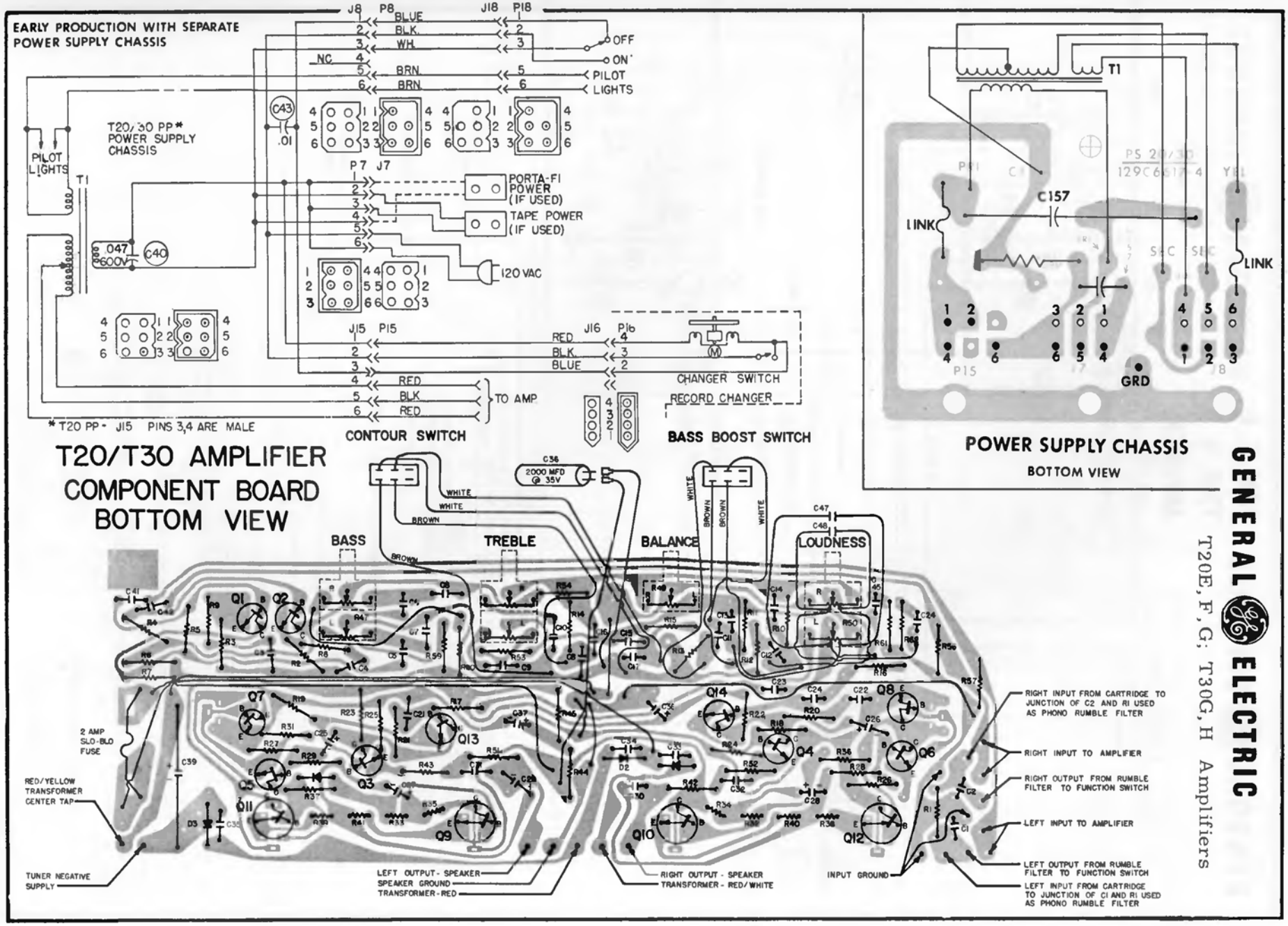


GENERAL ELECTRIC

T20E, F, G; T30G, H Amplifiers

# GENERAL ELECTRIC

# T20E, F, G
# T30G, H
# AMPLIFIERS

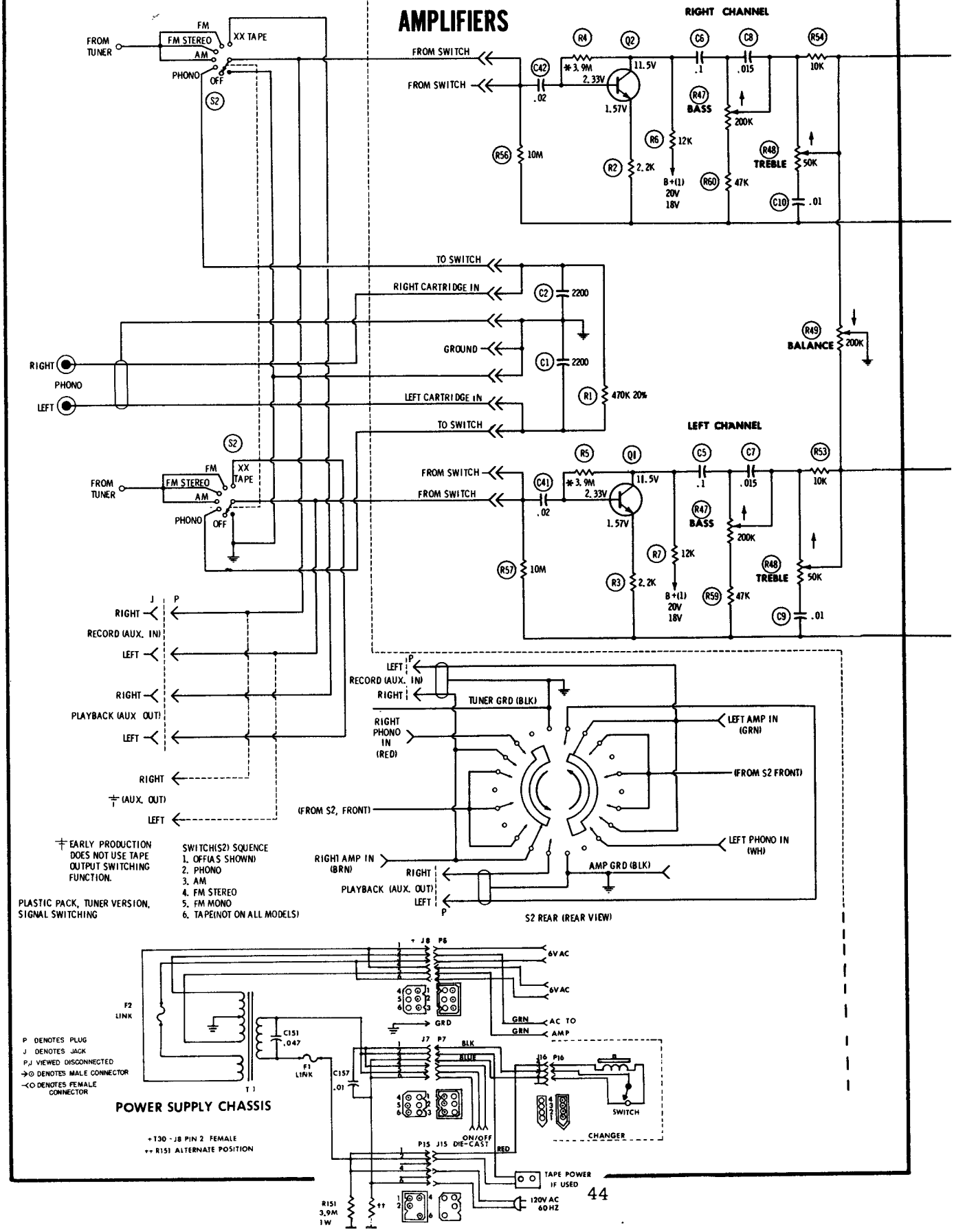

# GENERAL ELECTRIC

## T20E, F, G; T30G, H Amplifiers

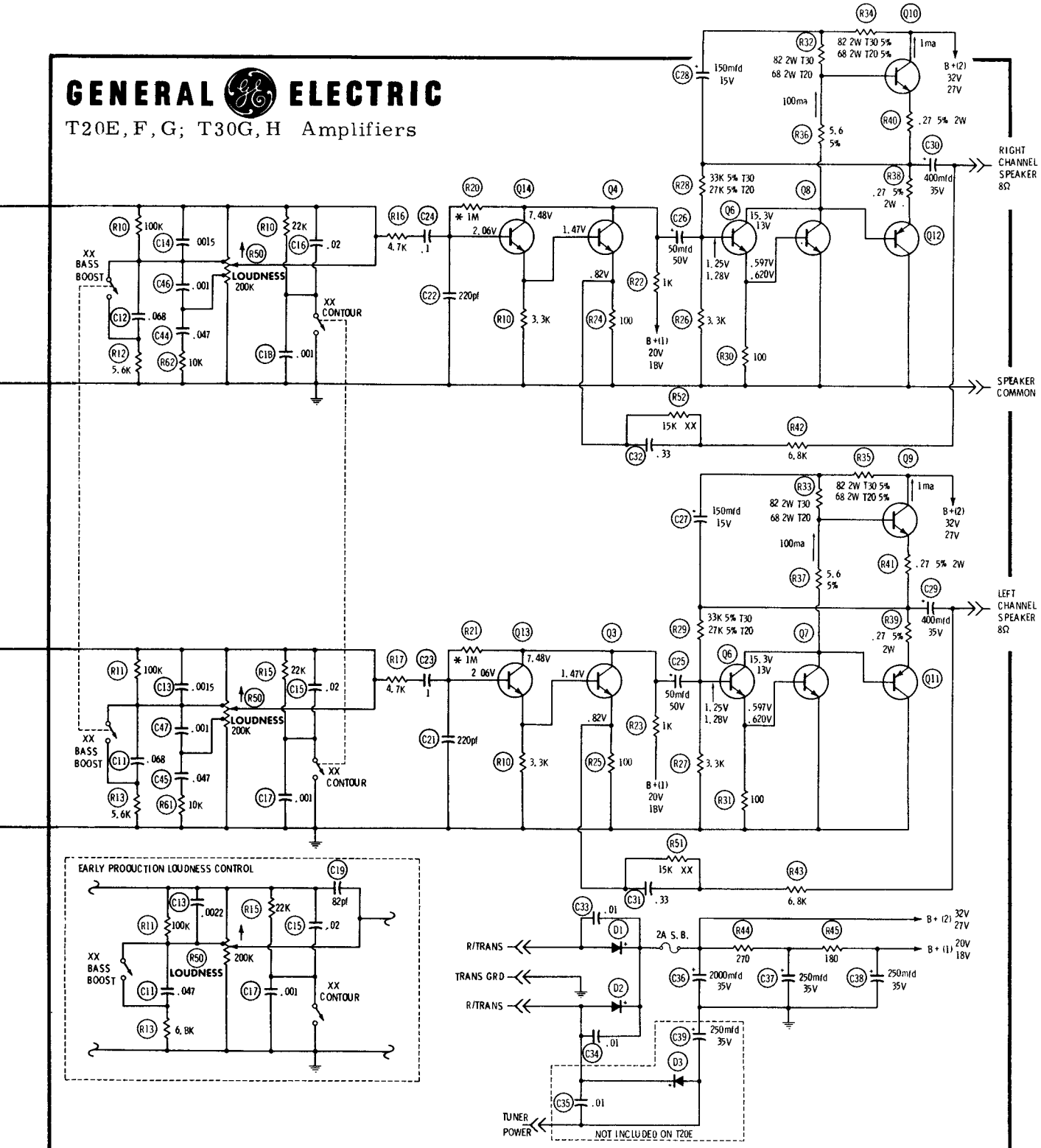


UNLESS OTHERWISE NOTED:

RESISTORS SHOWN ARE 1/2 WATT, 10%; K = 1000Ω; M = 1 MEGOHM.
CAPACITOR VALUES LESS THAN 1 IN mfd, MORE THAN 1 IN pf.
* DENOTES LOW NOISE TYPE RESISTOR.
P DENOTES PLUGS.
WHERE TWO VOLTAGES ARE SHOWN, THE UPPER READINGS ARE T30, LOWER READINGS ARE T20.
J DENOTES JACKS
MEASUREMENTS SHOWN MAY DEVIATE 10%.
ARROWS ON POTENTIOMETERS INDICATE CLOCKWISE ROTATION.

ALL VOLTAGES AND CURRENTS SHOWN ARE TYPICAL WITH NO SIGNAL APPLIED TO CIRCUIT
DC VOLTAGES MEASURED WITH 10 MEGOHM ELECTRONIC DC VOLTMETER.
LINE VOLTAGE MAINTAINED AT 120 VAC, 60 CYCLES.
XX DENOTES OMISSION ON SOME MODELS.
ARROW DENOTES TYPICAL NO SIGNAL CURRENT.
→ DENOTES MALE CONNECTOR.
← DENOTES FEMALE CONNECTOR

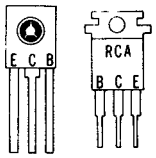


Q9, Q10


Q1 THRU Q6, Q13 AND Q14


Q7, Q8

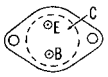


Q11, Q12

# GENERAL ELECTRIC TU200, TU205 AND TU210

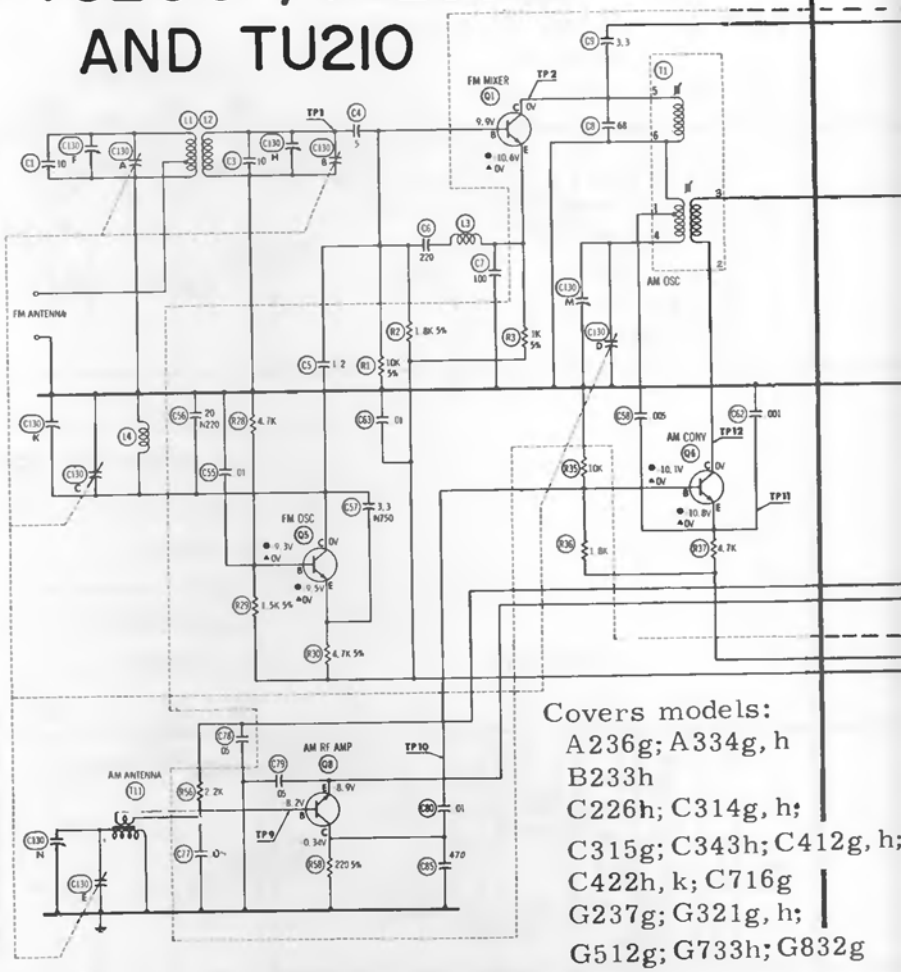


Covers models:
A236g; A334g, h
B233h
C226h; C314g, h;
C315g; C343h; C412g, h;
C422h, k; C716g
G237g; G321g, h;
G512g; G733h; G832g

SENSITIVITY: AM - 250 uv/m
FM - 7 uv Antenna Voltage for 30db quieting

| TRANSISTOR COMPLIMENT: SYMBOL | DESCRIPTION |
|---|---|
| Q1 | FM Mixer |
| Q2 | 1st FM IF, 1st AM IF |
| Q3 | 2nd FM IF, 2nd AM IF |
| Q4 | 3rd FM IF |
| Q5 | FM Oscillator |
| Q6 | AM Convertor |
| Q8 | AM RF Amplifier |
| Q9,10 | Voltage Regulator |
| Q11 | Stereo Indicator Amp. |
| Q12 | 38 KC Doubler |
| Q13 | 19 KC Pilot Amplifier |
| Q14 | Composite Stereo Amp. |

SPECIFICATIONS

| | |
|---|---|
| INPUT VOLTAGE RATING: | -22 Volts to -35 Volts @ 50ma |
| TUNING RANGE: | AM - 530 KC to 1630 KC<br>FM - 88 MC to 108 MC |
| INTERMEDIATE FREQUENCIES: | AM - 455 KC<br>FM - 10.7 MC |
| DIODES: | D1 - FM AGC<br>D2, D3 - Discriminator<br>D4 - AM Detector<br>D5 - Voltage Regulator Zener<br>D8, D9, D10, D11 - Stereo Detector |
| FM STEREO SEPARATION: | 25db Minimum @ 1 KC |
| FM STEREO FREQUENCY: | 50 cps to 15 KC |

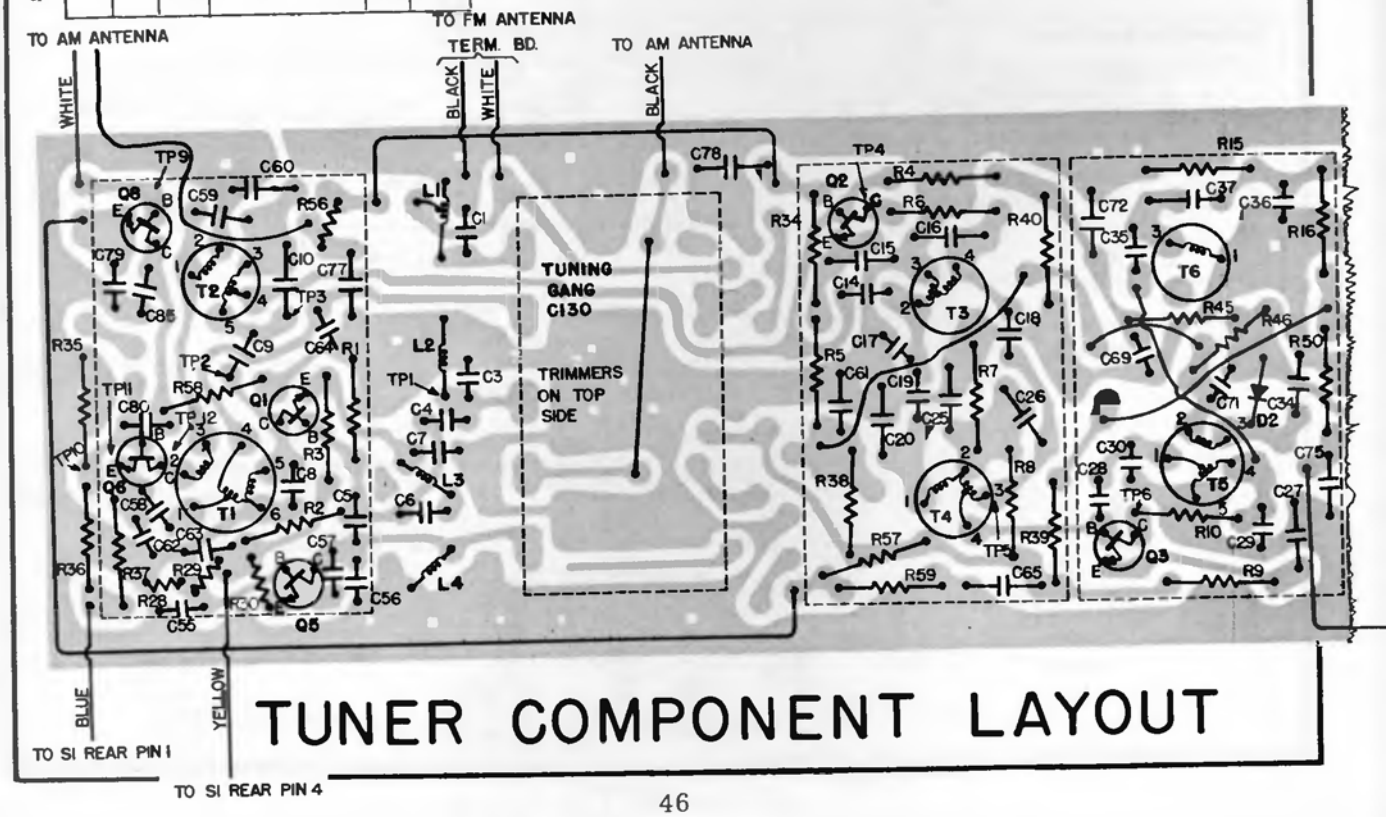


# TUNER COMPONENT LAYOUT

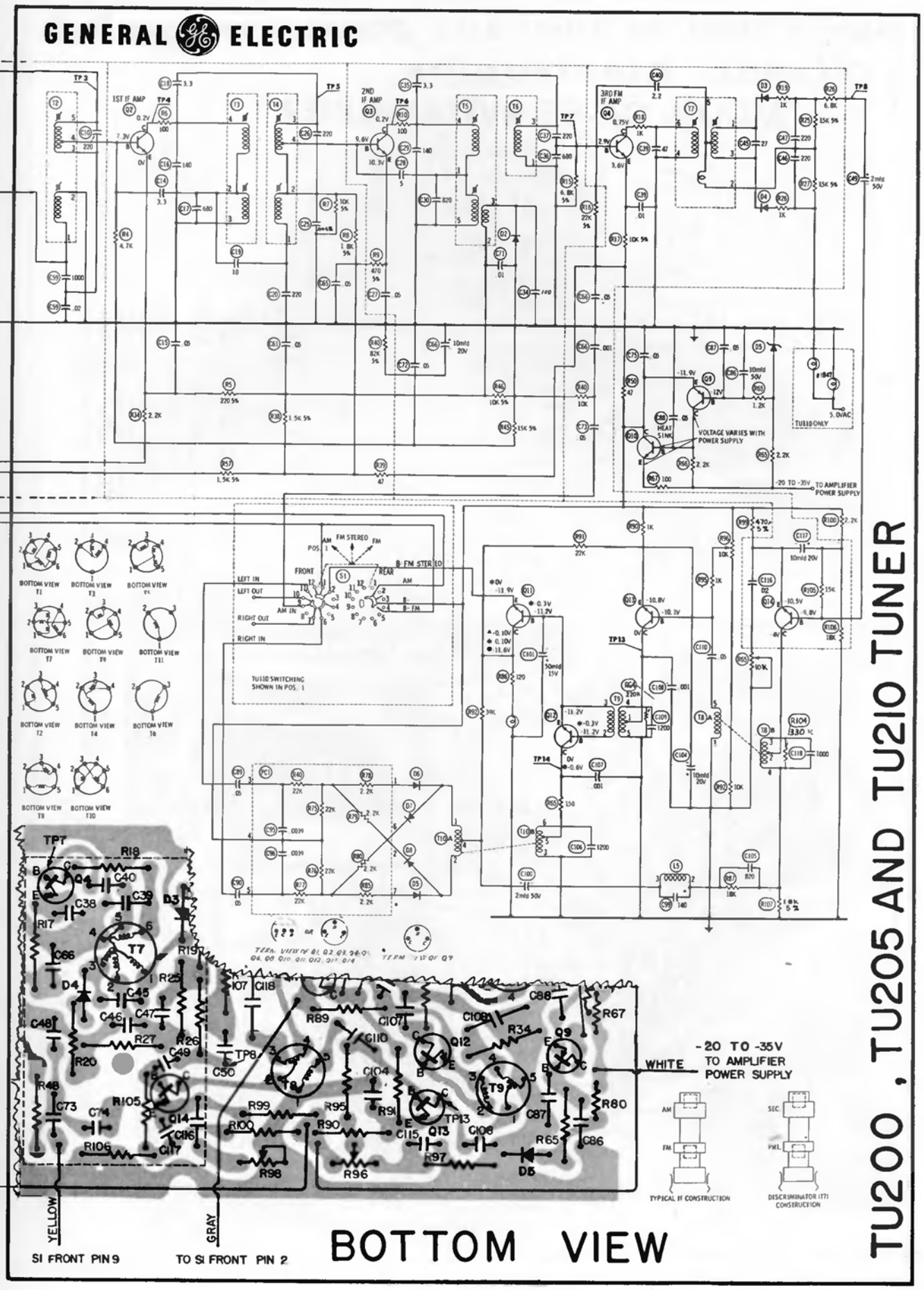
GENERAL ELECTRIC
TU200 , TU205 AND TU210 TUNER
1ST IF AMP
2ND IF AMP
3RD FM IF AMP
VOLTAGE VARIES WITH POWER SUPPLY
HEAT SINK
TU110 ONLY
-20 TO -35V TO AMPLIFIER POWER SUPPLY
TU110 SWITCHING SHOWN IN POS. 1
LEFT IN
LEFT OUT
RIGHT OUT
RIGHT IN
AM IN
FRONT
REAR
AM
FM STEREO
FM
B-FM STEREO
B-FM
BOTTOM VIEW T1
BOTTOM VIEW T2
BOTTOM VIEW T3
BOTTOM VIEW T4
BOTTOM VIEW T6
BOTTOM VIEW T7
BOTTOM VIEW T8
BOTTOM VIEW T9
BOTTOM VIEW T10
BOTTOM VIEW T11
-20 TO -35V
TO AMPLIFIER
POWER SUPPLY
WHITE
YELLOW
GRAY
SI FRONT PIN 9
TO SI FRONT PIN 2
TYPICAL IF CONSTRUCTION
DESCRIMINATOR (T7) CONSTRUCTION
BOTTOM VIEW

# Gibson Electronics

# MODEL GA-95 RVT AMPLIFIER

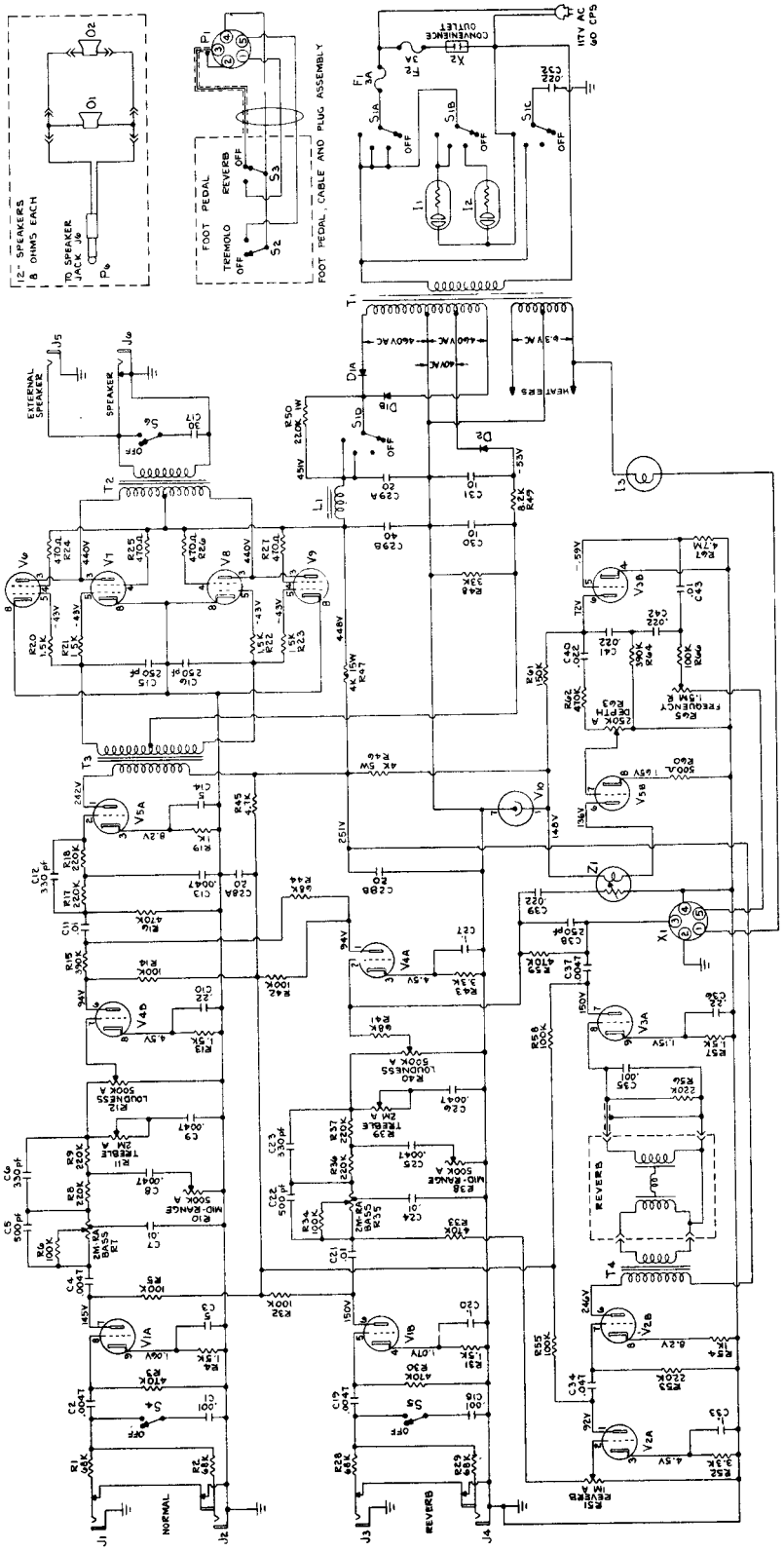


## Parts list:

| | | | |
|---|---|---|---|
| T1 | Power Transformer | TF-103P | Diode - 1200 PIV |
| T2 | Output Transformer | TF-503-0 | Diode - 200 PIV |
| T3 | PP Driver Transformer | TF-1001D | |
| T4 | Reverb Transformer | TF-824-00 | Foot Pedal Socket |
| | | | Convenience Outlet |
| L1 | Filter Choke | TF-1002C | Control - 2 meg audio w/switch |
| S1A,B,C,D | Switch | SW-78A-1 | R10,R12,R38,R40 Control - 500K audio |
| S2 | Switch SPST | SW-821-03 | Control - 250K audio |
| S3 | Switch SPDT | SW-821-22 | R43 Control - 2 meg, audio |
| S4,S5 | Switches DPDT Slide | SW-129 | R11 Control - 1 meg, audio |
| | | | R61 Control - 1.5 meg, RA |
| I1 | Pilot Light (Red) | PL-37R | R65 Control - 2 meg, RA |
| I2 | Pilot Light (Amber) | PL-38A | R7,R35 Control - 2 meg, RA |
| I3 | Pilot Light (Red) w/clip | PL-38R | C1,C2 Speakers - 12" 8 ohms each |

DIA,D18 — DI-57
D2 — DI-405
F1 — CM-78PC0-5
X1 — CN-303
R39 — CBA-4005-1
R10,R12,R38,R40 — CBA-4007
R43 — CBA-4008
R11 — CBA-811-3702-1
R61 — CBA-811-3709-1
R65 — CBA-811-3711-1
R7,R35 — CBA-813-222-1
C1,C2 — S-20011

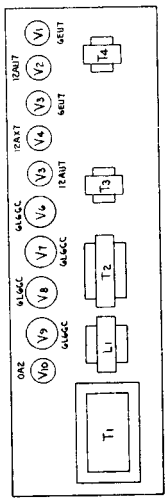

# Magnavox R266 SERIES AM RADIO CHASSIS

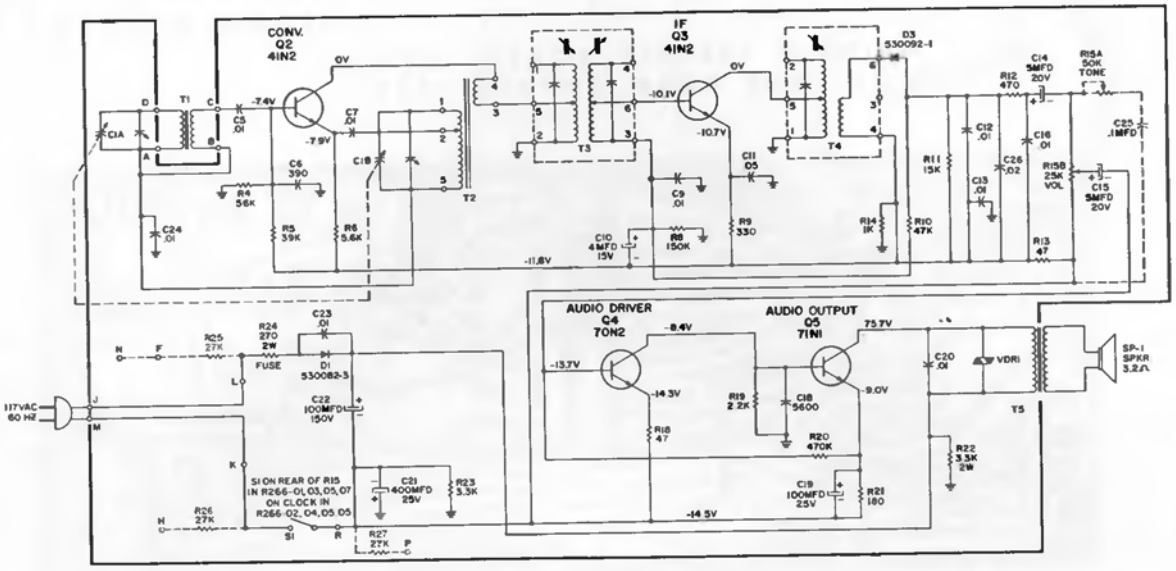


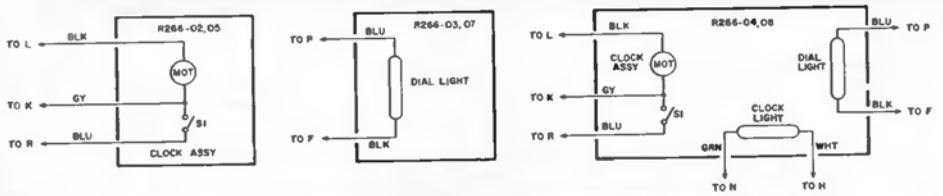


NOTES:
UNLESS OTHERWISE SPECIFIED:
1. ALL RESISTORS ARE 1/2W, 10%.
2. CAPACITANCE VALUES OF 1 AND LESS ARE IN MICROFARADS.
3. CAPACITANCE VALUES GREATER THAN 1 ARE IN PICOFARADS.
4. DC VOLTAGES ARE MEASURED WITH A HIGH IMPEDANCE VTVM, NO RF INPUT, AND A LINE VOLTAGE OF 117 VAC.

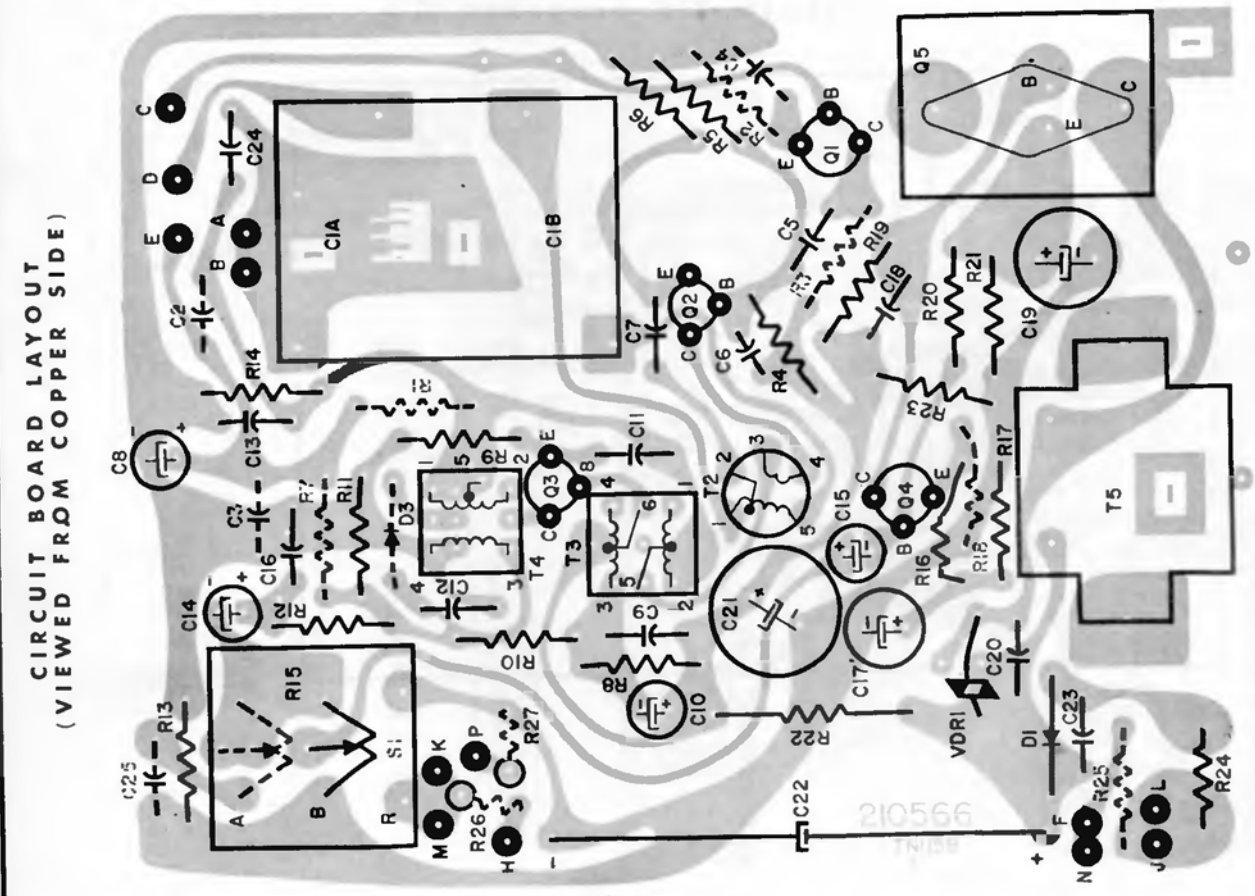


Intermediate Frequency 455 KHz

## PRINTED CIRCUIT BOARD LAYOUT (VIEWED FROM COPPER SIDE)

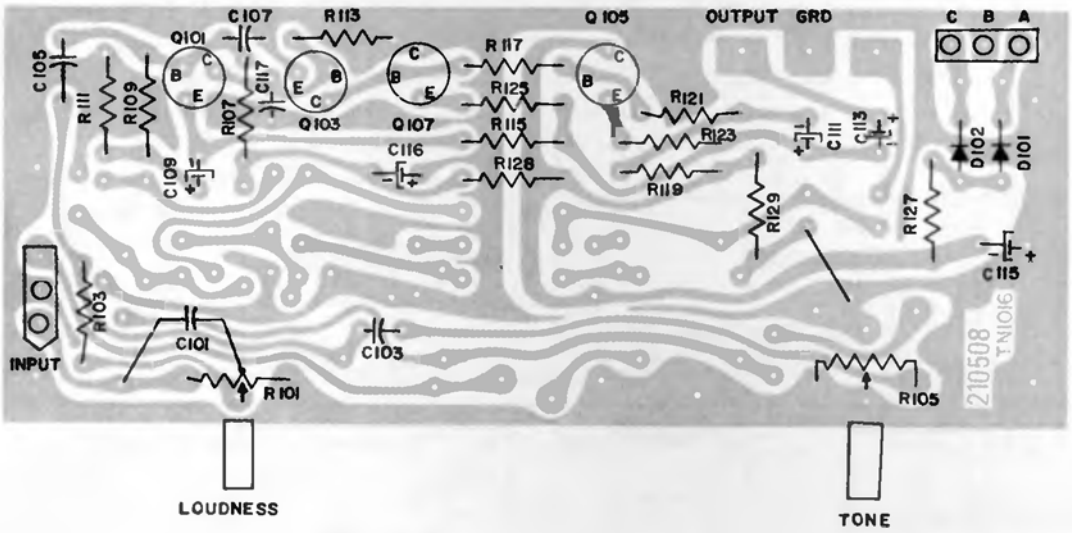


## SCHEMATIC DIAGRAM

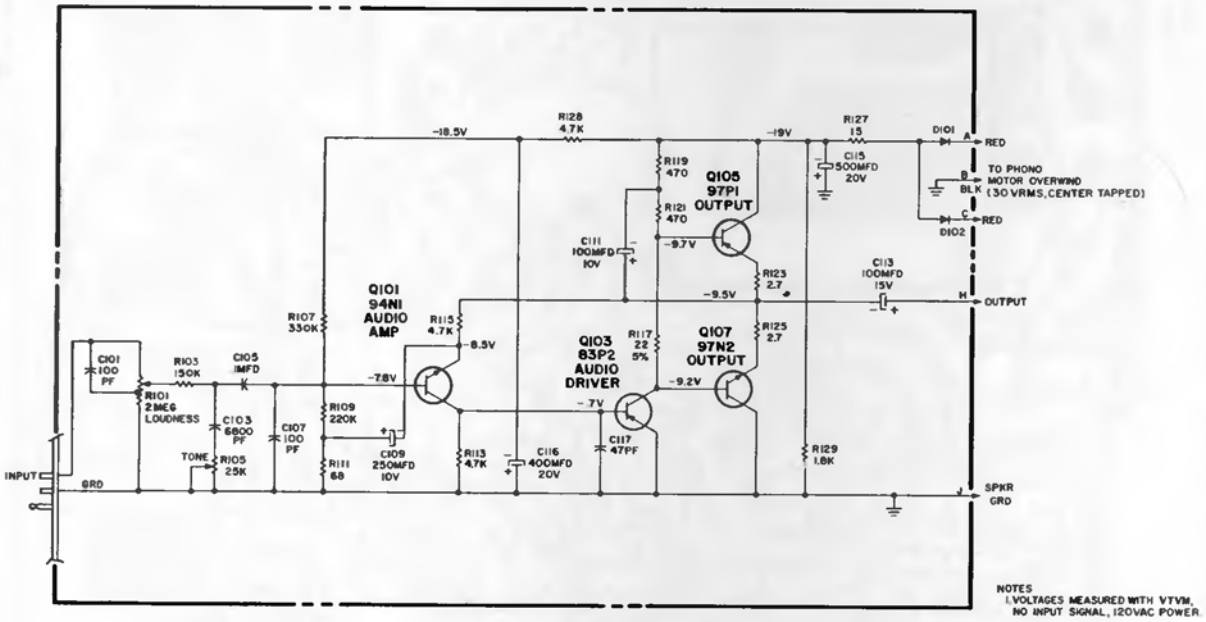


NOTES
1. VOLTAGES MEASURED WITH VTVM, NO INPUT SIGNAL, 120VAC POWER.

# Magnavox

## IR1000 TRANSISTOR PORTABLE RADIO

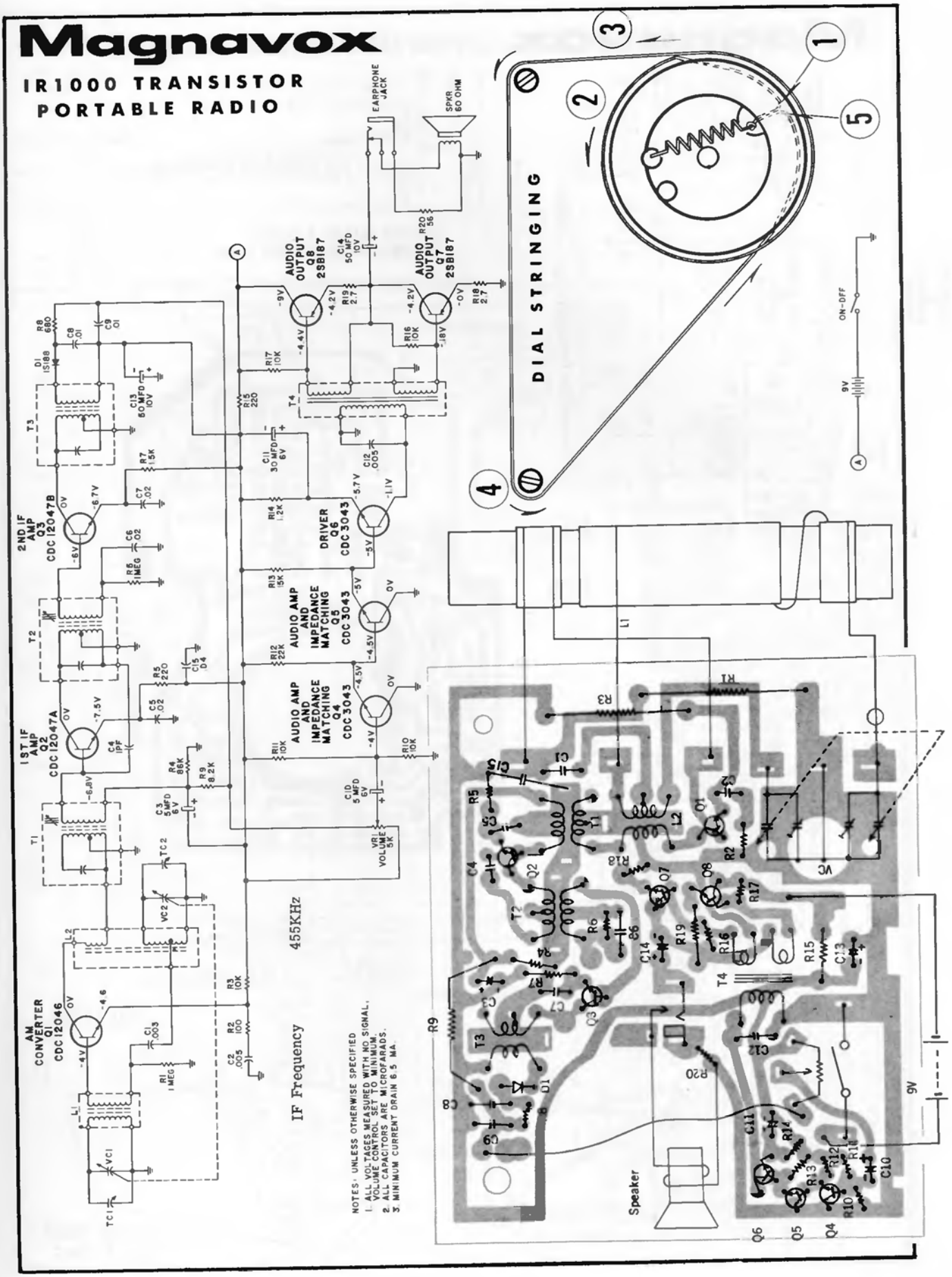

# Magnavox

## 1R1002 AM SOLID-STATE RADIO

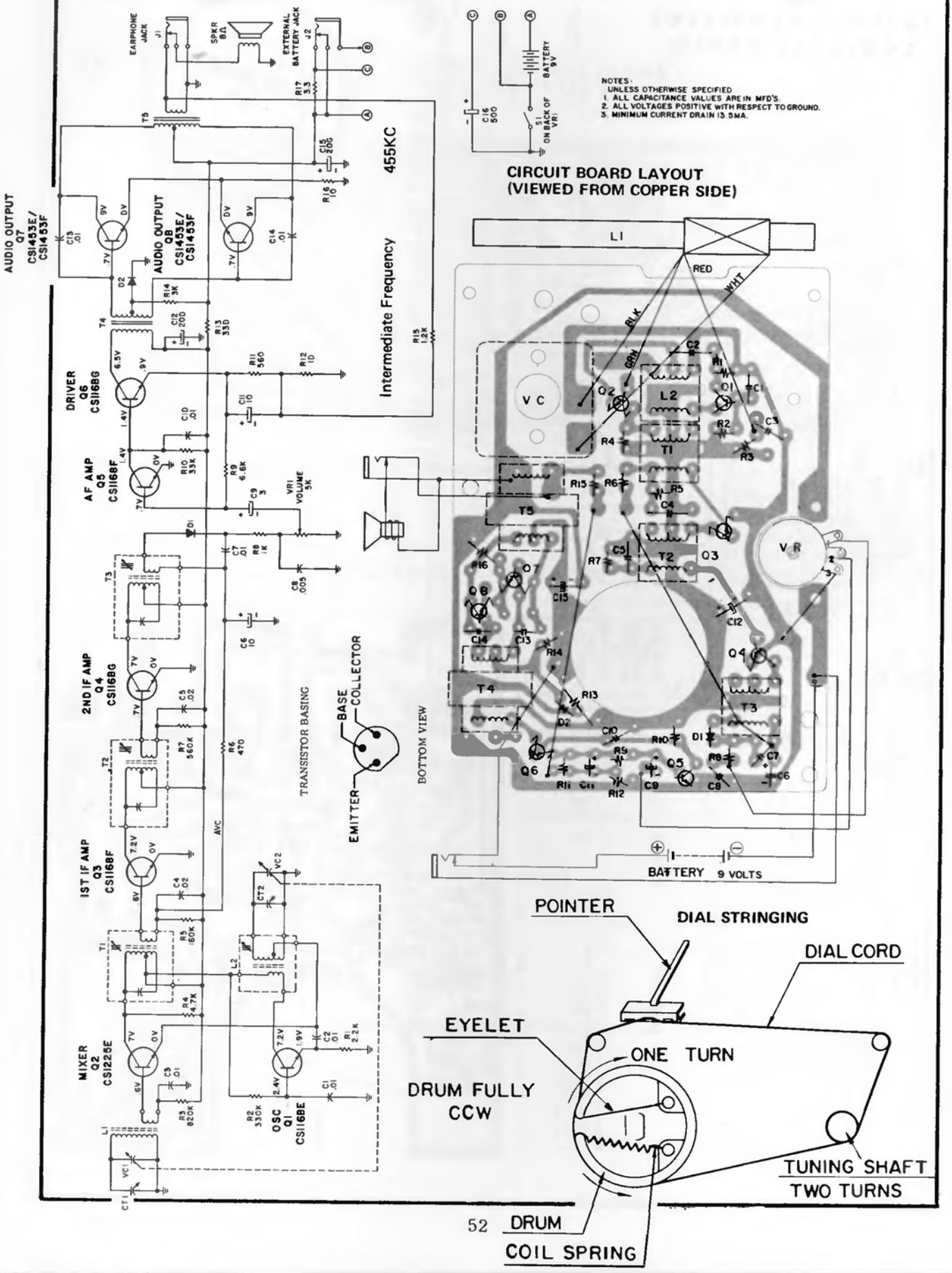

# Magnavox 1R1003 AM PORTABLE RADIO

| | |
|---|---|
| Power Source | |
| Battery | Eveready 216 or equiv. |
| AC | W/External Adaptor |
| Frequency Range | 540-1600KC |
| Intermediate Frequency | 455KC |
| Current Drain | 8.2MA (no signal) |

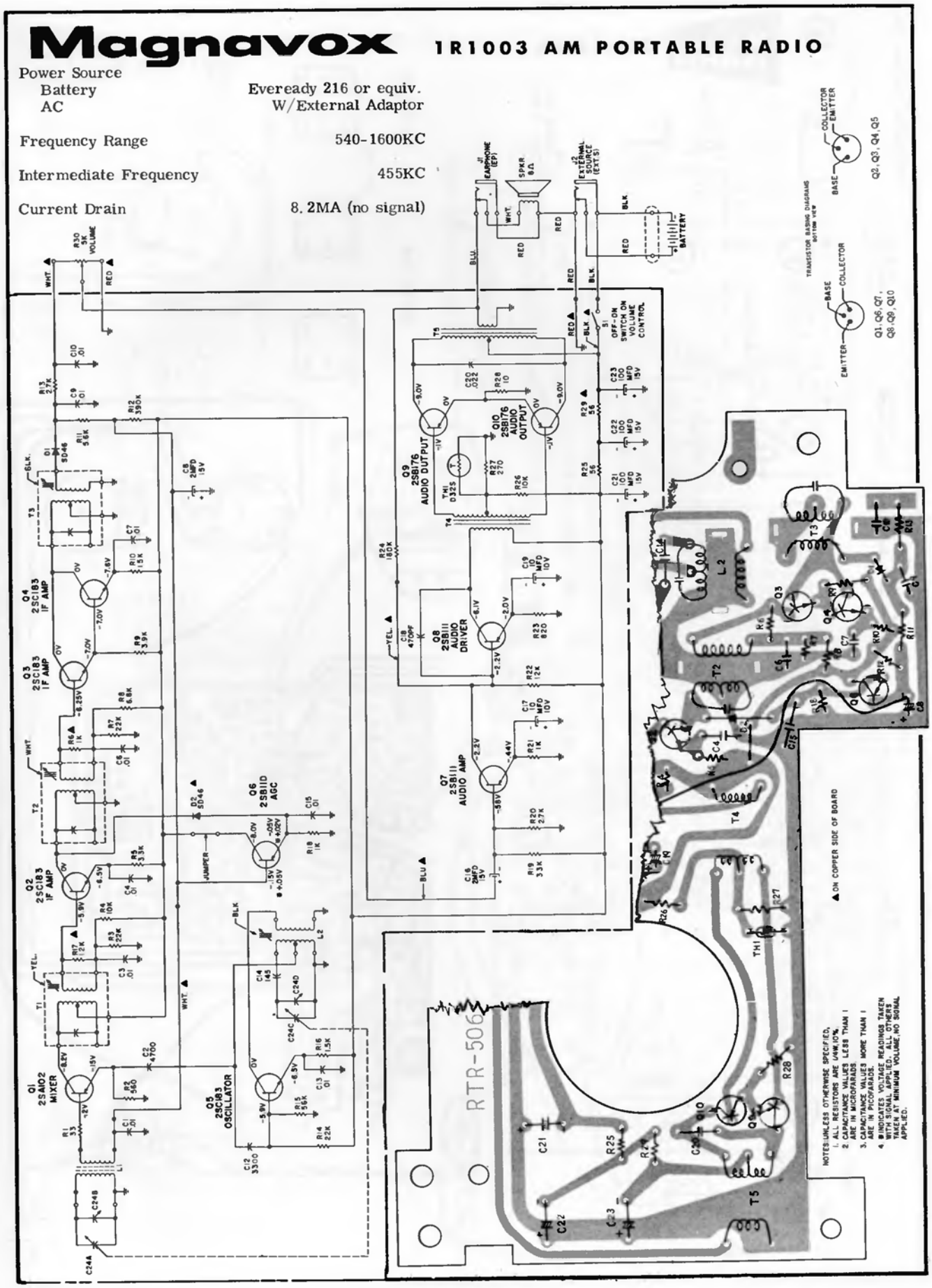

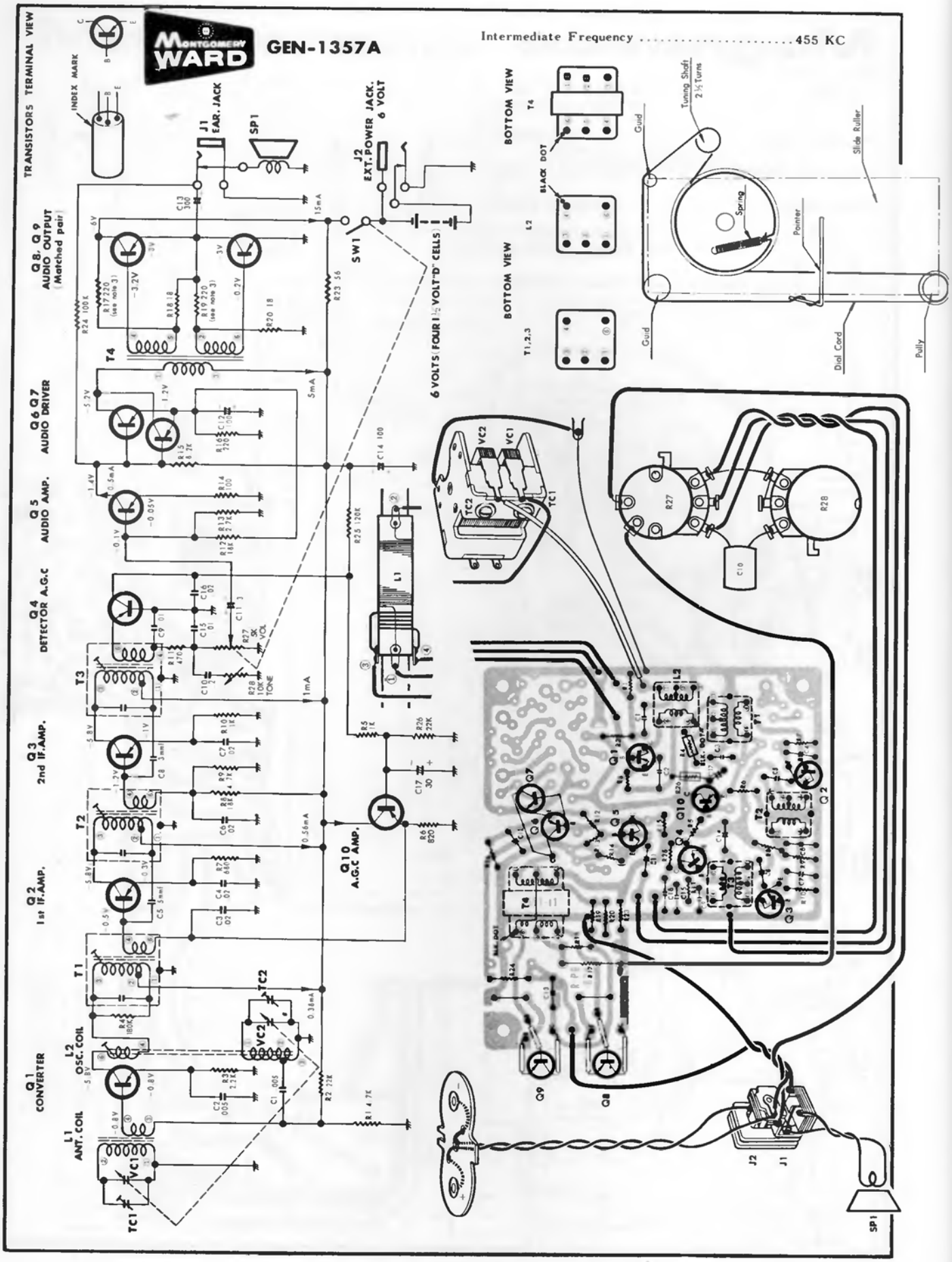
MONTGOMERY WARD
GEN-1357A
Intermediate Frequency .....455 KC
TRANSISTORS TERMINAL VIEW
INDEX MARK
J1 EAR. JACK
SP1
J2 EXT. POWER JACK. 6 VOLT
SW1
6 VOLTS (FOUR 1½ VOLT "D" CELLS)
BOTTOM VIEW
BLACK DOT
Tuning Shaft 2½ Turns
Guid
Spring
Pointer
Slide Ruller
Dial Cord
Pully
Q8, Q9 AUDIO OUTPUT (Matched pair)
Q6 Q7 AUDIO DRIVER
Q5 AUDIO AMP.
Q4 DETECTOR A.G.C
Q3 2nd IF.AMP.
Q2 1st IF.AMP.
Q1 CONVERTER
Q10 A.G.C AMP.
L1 ANT. COIL
L2 OSC. COIL
T1
T2
T3
T4
VC1
VC2
TC1
TC2
R27 5K VOL
R28 10K TONE
R23 36
R24 100K
R25 120K
R26 22K
R2 22K
R1 4.7K
C1 .005
C17 30
C14 100
C13 300
15mA
5mA
1mA
0.56mA
0.36mA

**MODEL GEN-1119A**

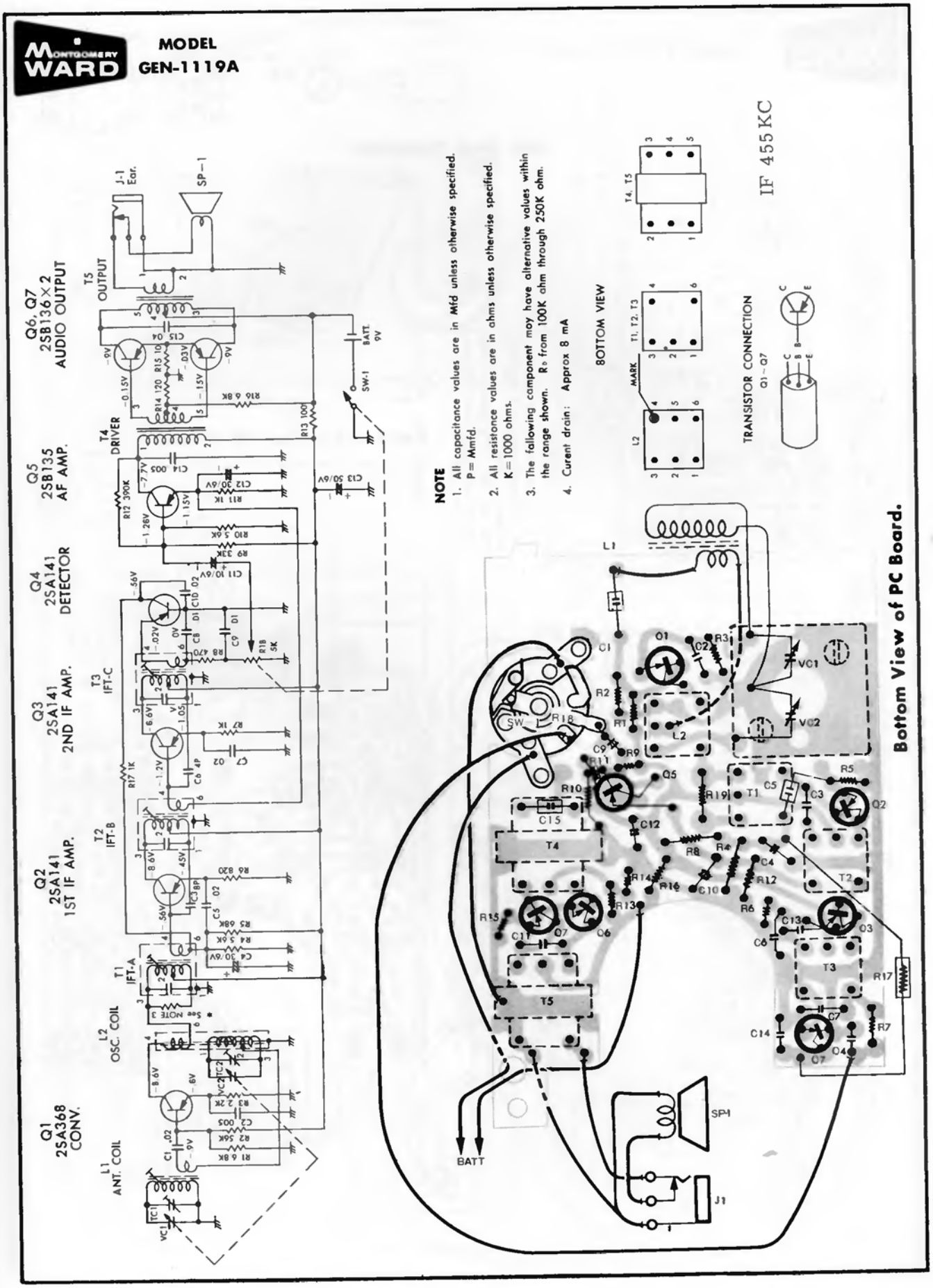

MONTGOMERY WARD

Model: GEN-1129A

IF 455 KC

TRANSISTOR CONNECTION

Q1 ~ 8

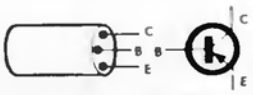


BOTTOM VIEW

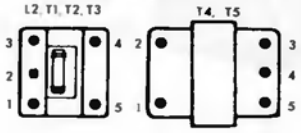


## Dial Cord Stringing.

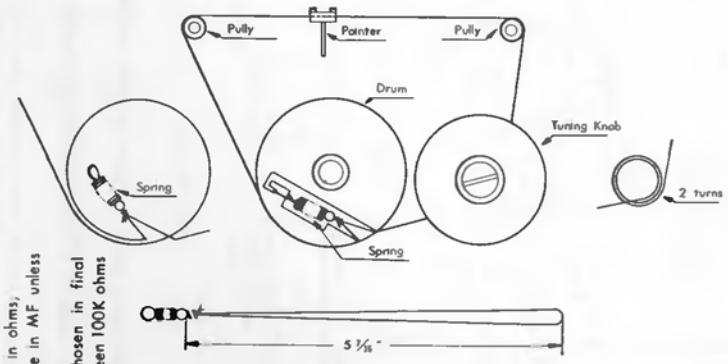


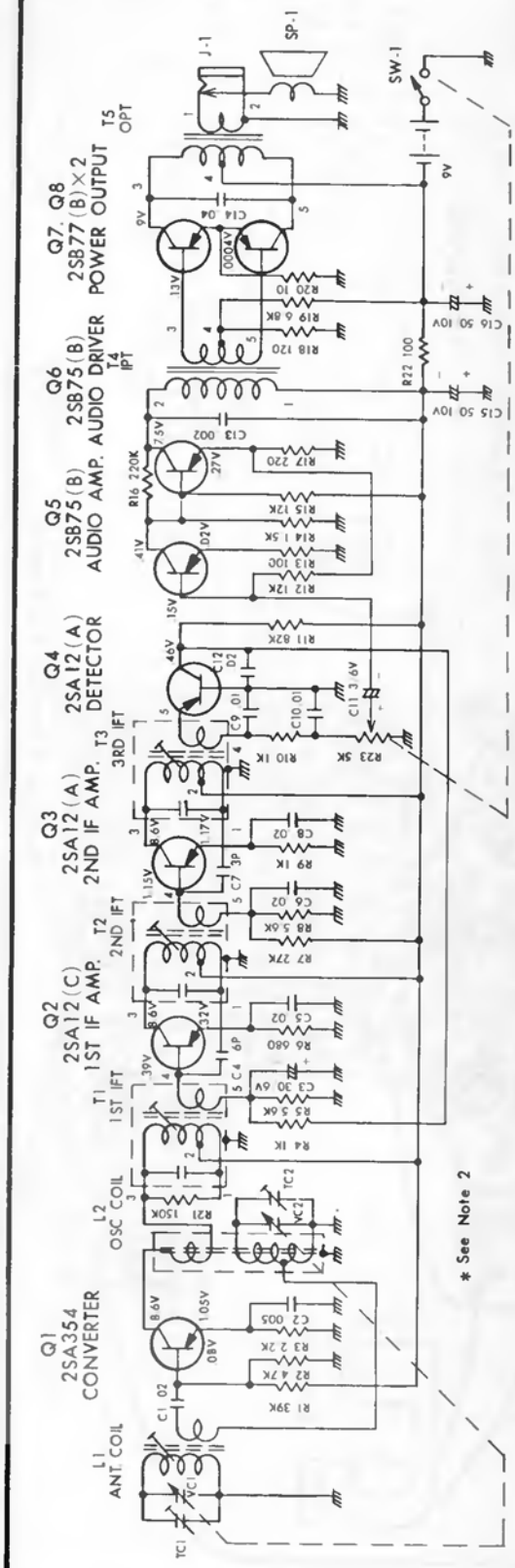


**NOTES**

1) All resistance values are in ohms, all capacitance values are in MF unless otherwise specified.
2) The value of R21 is chosen in final test and may vary between 100K ohms and 330K ohms.

## Bottom View of PC Board.

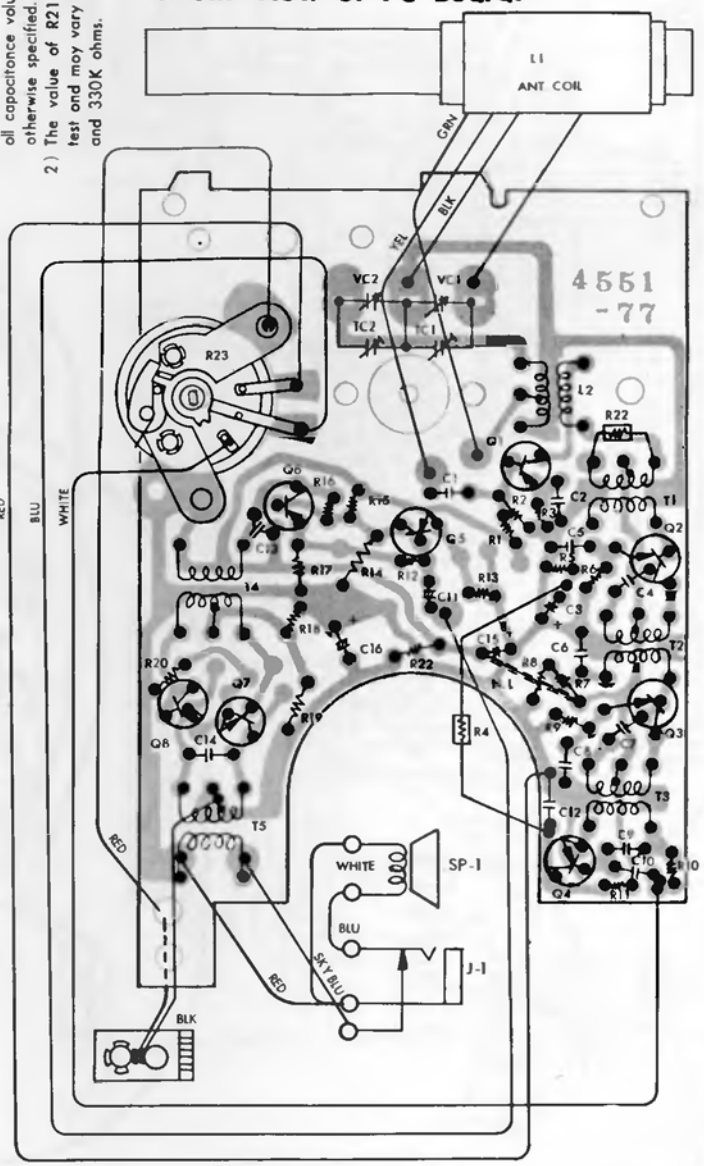

MONTGOMERY WARD

**MODELS**
**GEN-1158A GEN-1158B**
**GEN-1158C**

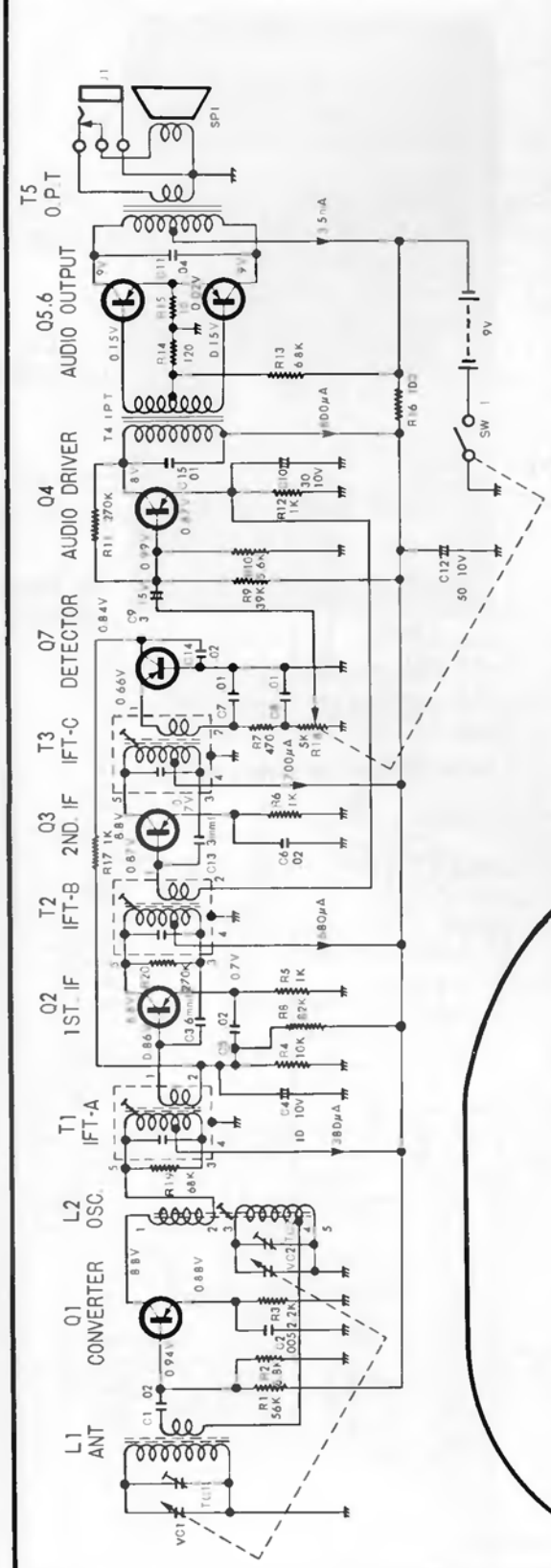


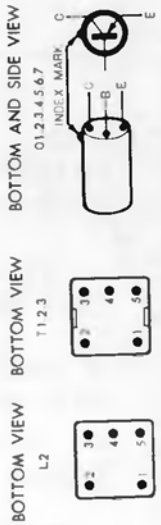


**NOTES:**

1) All resistance values are in ohms; all capacitance values are in MF unless otherwise specified.
2) Voltage measurements made with V.T.V.M. from indicated points to ground and with volume control at minimum, no signal input. Current measurement made at indicated points under the same conditions.
3) The following components may have alternate values within the ranges shown.
   R1 : from 47K ohm to 56K ohm
   R13 : from 6.8K ohm to 12K ohm
   R19 : from 82K ohm to 270K ohm
   R20 : from 180K ohm to ohm

IF 455 KC

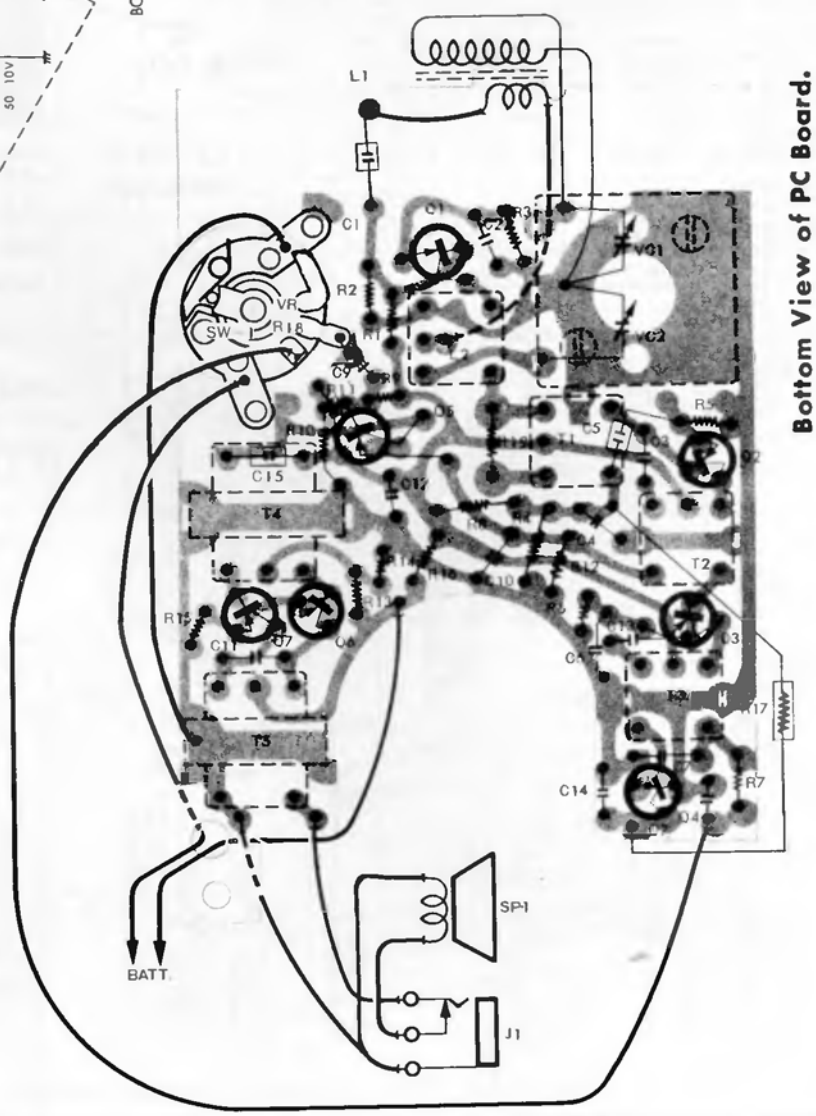


**Bottom View of PC Board.**

# MOTOROLA MODELS PP207C, PP209C, PK403C, SK455C, SK456C, SK457C CHASSIS HS-2334A, HS-2339F, HS-2349C

(Continued on next two pages.)

| MODEL NUMBER | PP 207C | PP 209C | PK 403C | SK 455C | SK 456C | SK 457C |
|---|---|---|---|---|---|---|
| CHANNELS | 2 | 2 | 2 | 2 | 2 | 2 |
| WATTS-MUSIC POWER OUTPUT | 5 | 5 | 5 | 5 | 5 | 5 |
| MOTOROLA 4-SPEED AUTOMATIC RECORD CHANGER | M 113RC | M 114RC | VM 124RC | VM 124RC | VM 119RC | VM 119RC |
| CARTRIDGE | Cer. | Cer. | Cer. | Cer. | Cer. | Cer. |
| STYLII | Saph. | Dia. | Dia. | Dia. | Dia. | Dia. |
| CHANGER COMPARTMENT LIGHT | | | | | | |
| RECORD STORAGE | | | Yes | Yes | Yes | Yes |
| OUTPUT STAGE | S.E. | S.E. | S.E. | S.E. | S.E. | S.E. |
| LOUDNESS CONTROL | Yes | Yes | Yes | Yes | Yes | Yes |
| TONE CONTROL | | | | | | |
| BASS AND TREBLE CONTROL | Yes | Yes | Yes | Yes | Yes | Yes |
| BALANCE CONTROL | Yes | Yes | Yes | Yes | Yes | Yes |
| TRANSFORMER POWER SUPPLY | Yes | Yes | Yes | Yes | Yes | Yes |
| ON-OFF INDICATOR | | | | Yes | Yes | Yes |
| STEREO HEADPHONE JACK | | | Yes | Yes | Yes | Yes |
| TAPE INPUT AND OUTPUT JACKS | | | | Yes | Yes | Yes |
| NOISE FILTER | | | | | | |
| LOC/DIST. SWITCH | | | | Yes | Yes | Yes |
| EXTENDED BASS | | | | | | |
| FM MUTE | | | | | | |
| NUMBER OF TRANSISTORS | 8 | 8 | 8 | 21 | 21 | 21 |
| 45 R.P.M. SPINDLE AND STORAGE | Yes | Yes | Yes | Yes | Yes | Yes |
| TUNER CHASSIS | | | | HS 2339F | HS 2339F | HS 2339F |
| AMPLIFIER CHASSIS | HS 2349C | HS 2349C | HS 2234 | HS 2334 | HS 2334 | HS 2334 |
| MODEL NUMBER | PP 207C | PP 209C | PK 403C | SK 455C | SK 456C | SK 457C |

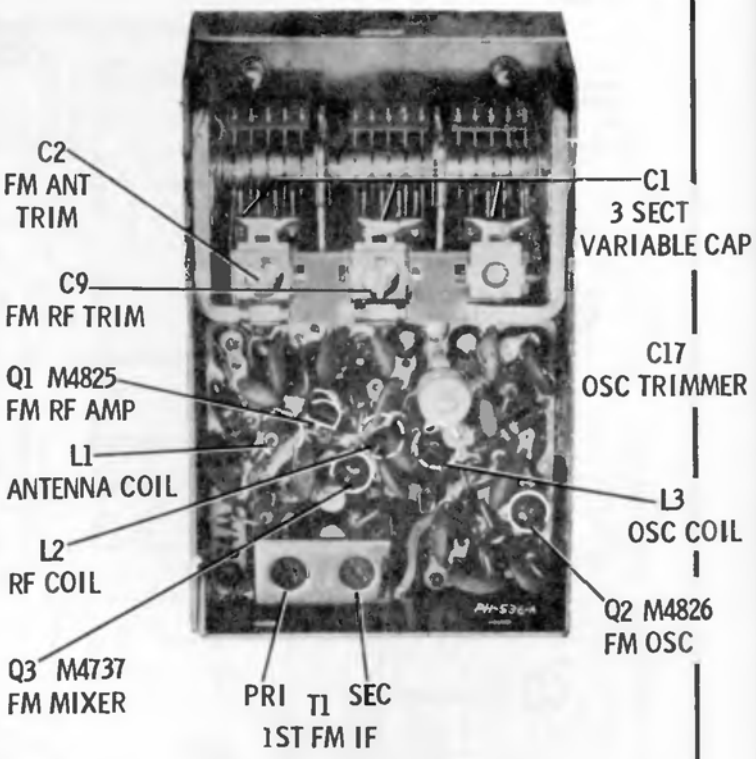


FM RF SECTION (TOP VIEW) - HS-2339F

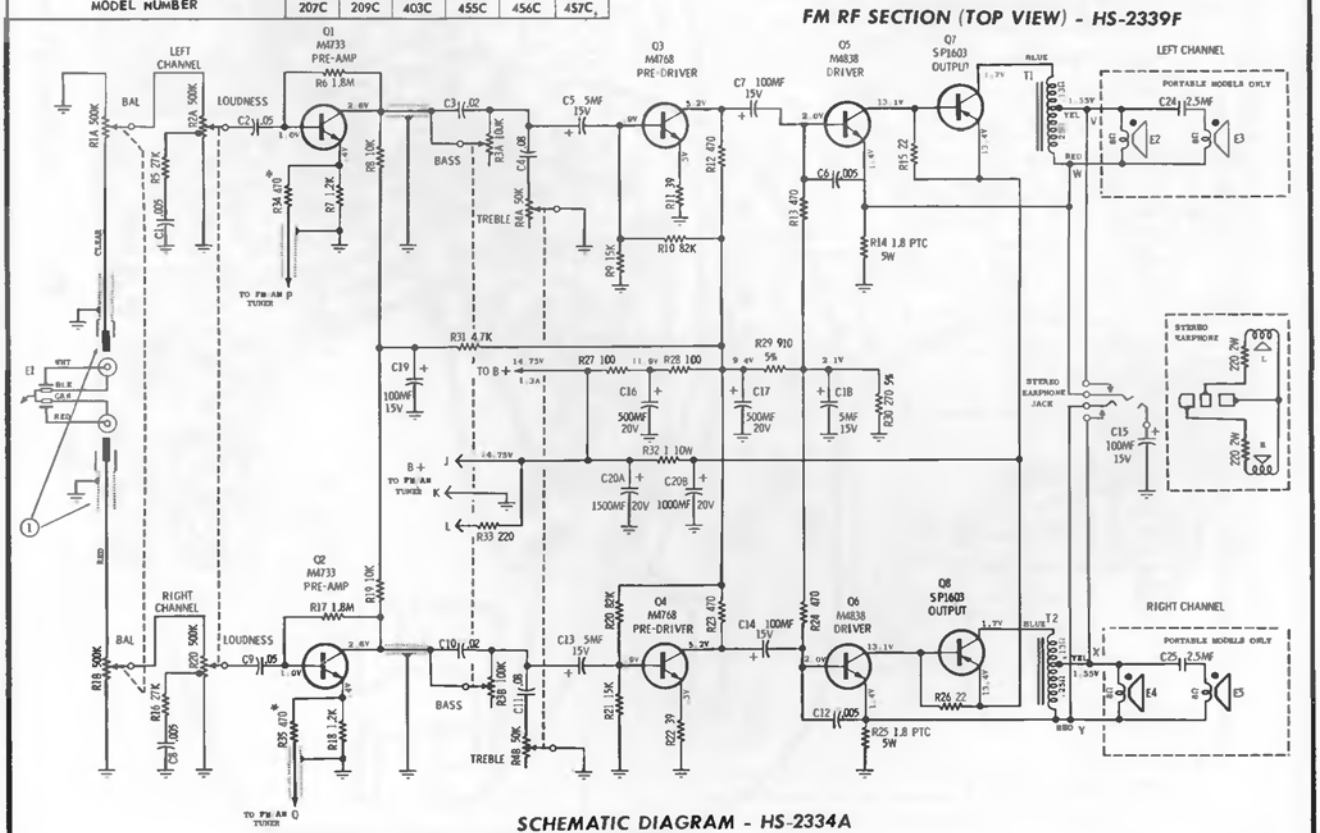


SCHEMATIC DIAGRAM - HS-2334A

(Continued from preceding page and on next page.)

**MOTOROLA**

CHASSIS HS-2339F
MODELS SK455C, SK456C, SK457C

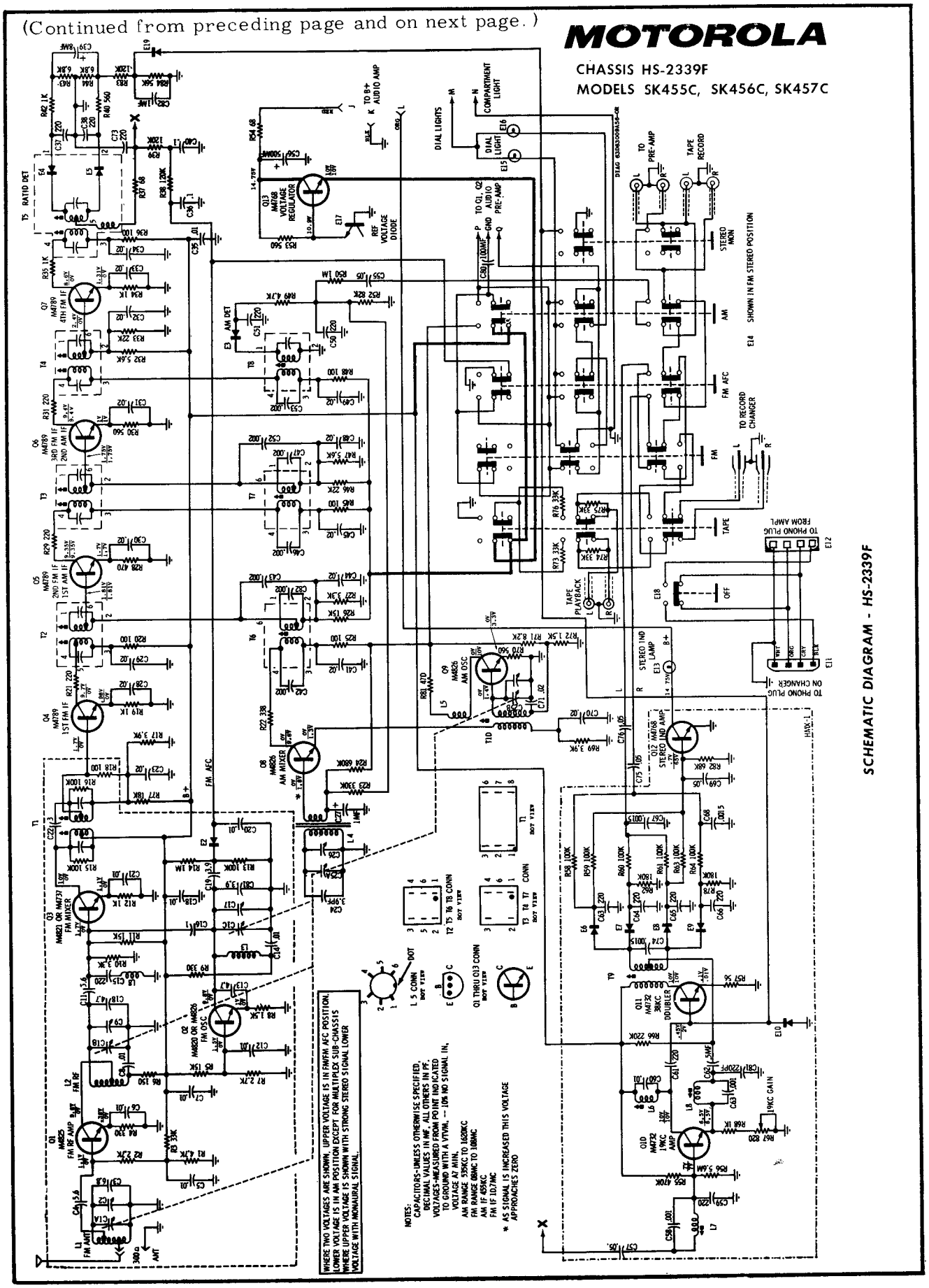

**MOTOROLA**

MODELS PP207C, PP209C, PK403C, SK455C, SK456C, SK457C

CHASSIS HS-2334A, HS-2339F, HS-2349 C

(Continued from the preceding two pages.)

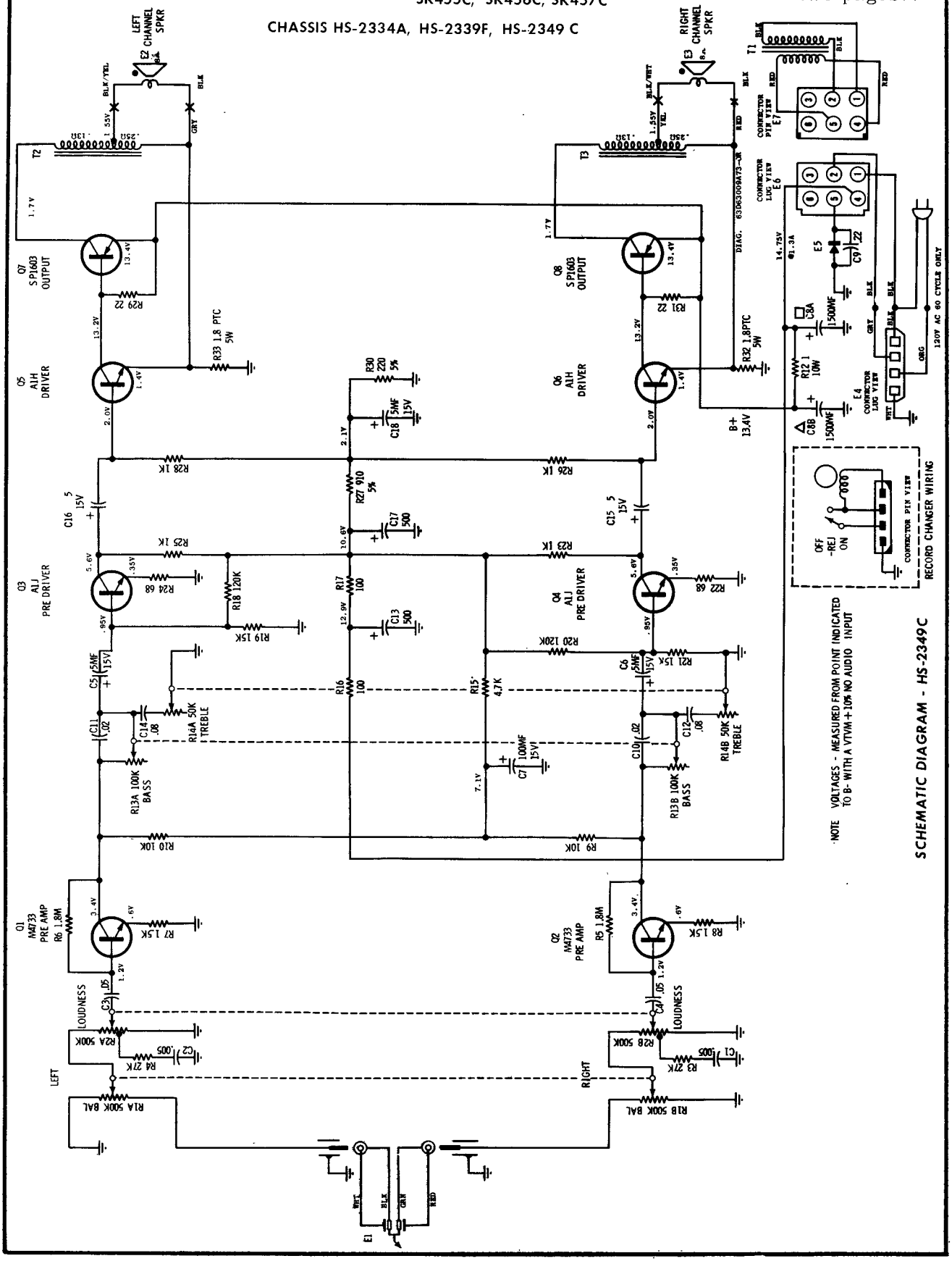

# MOTOROLA CHASSIS HS-62250; MODEL PK15C

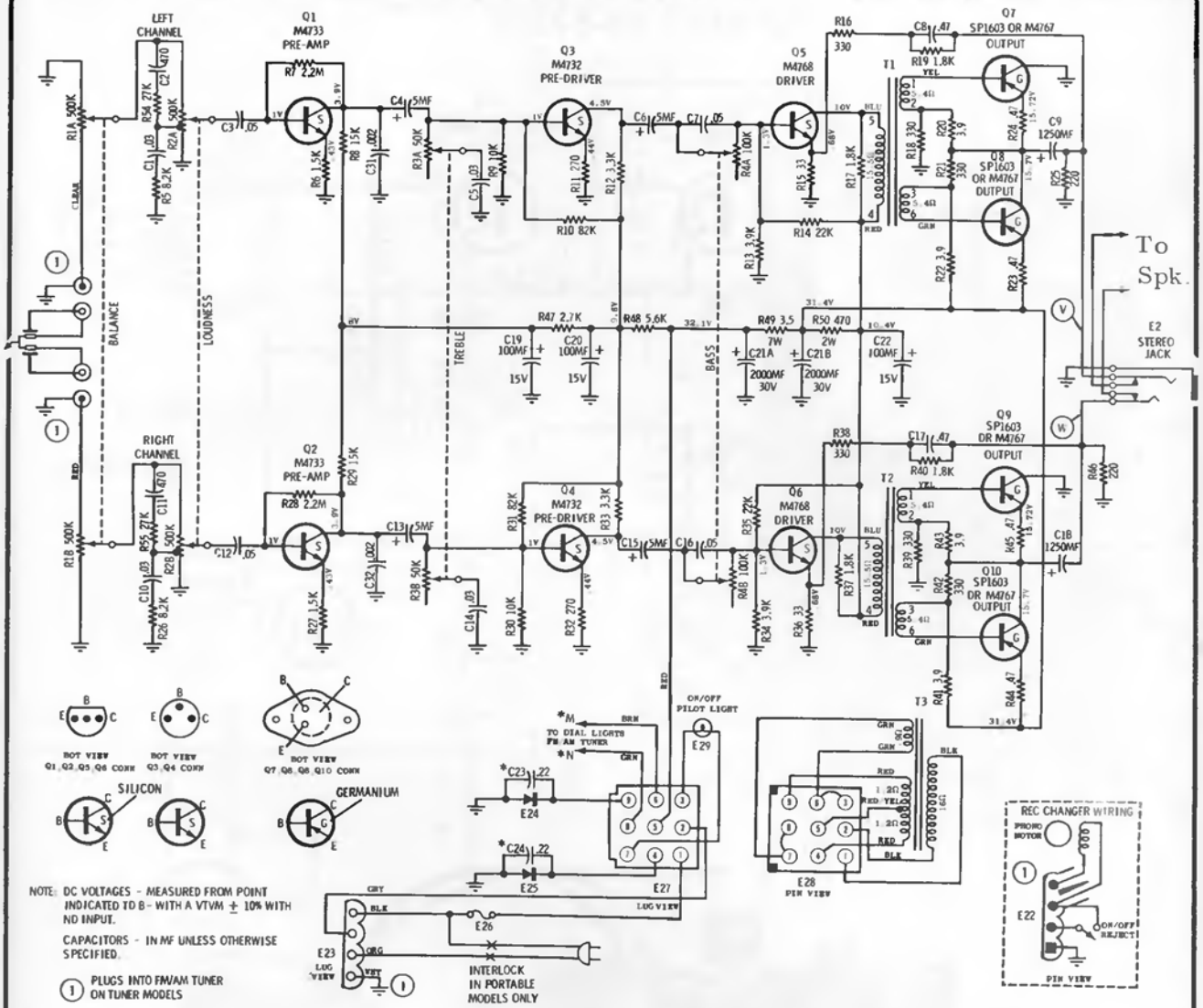


NOTE: DC VOLTAGES - MEASURED FROM POINT INDICATED TO B- WITH A VTVM ± 10% WITH NO INPUT.

CAPACITORS - IN MF UNLESS OTHERWISE SPECIFIED.

(1) PLUGS INTO FM/AM TUNER ON TUNER MODELS

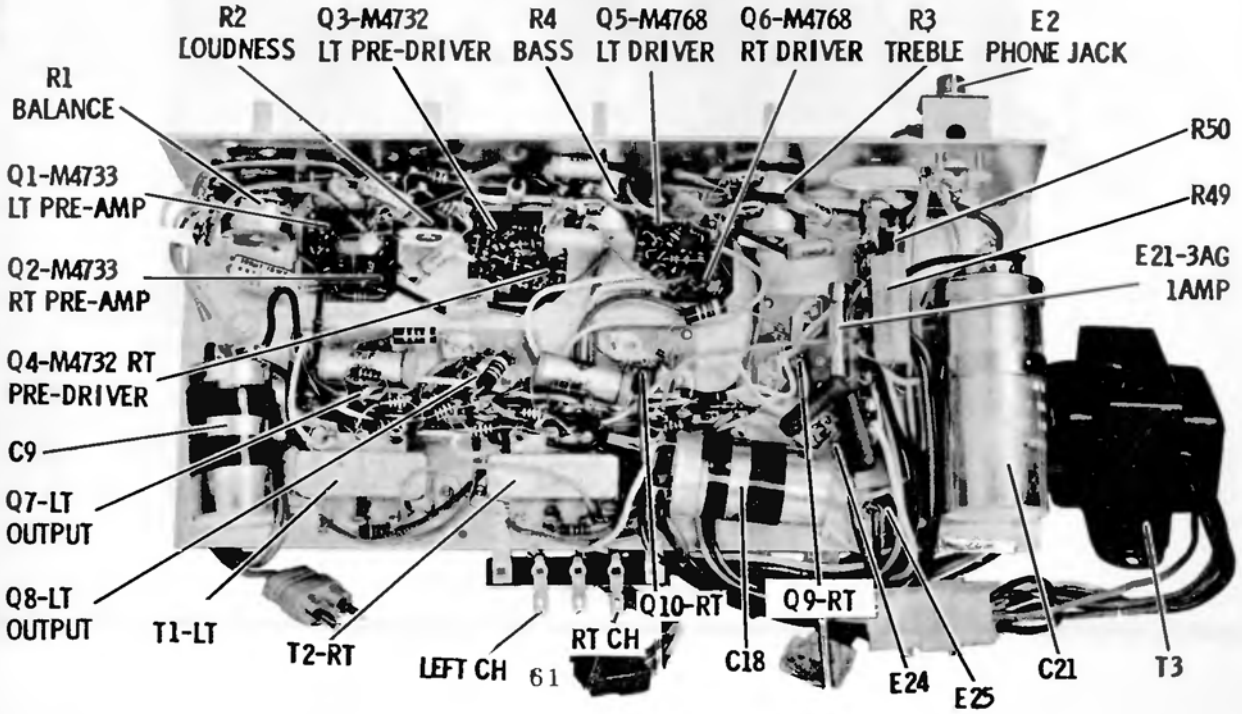

**MOTOROLA**

# MODEL MP10C
## CHASSIS HS-63213

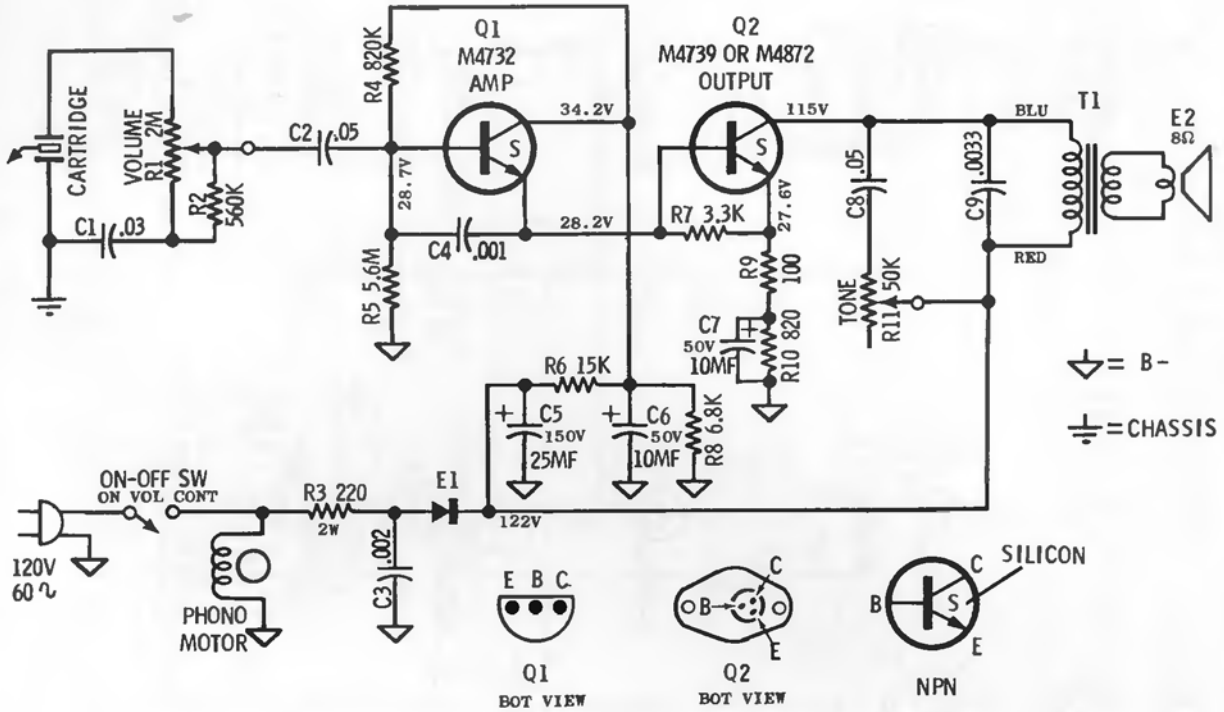


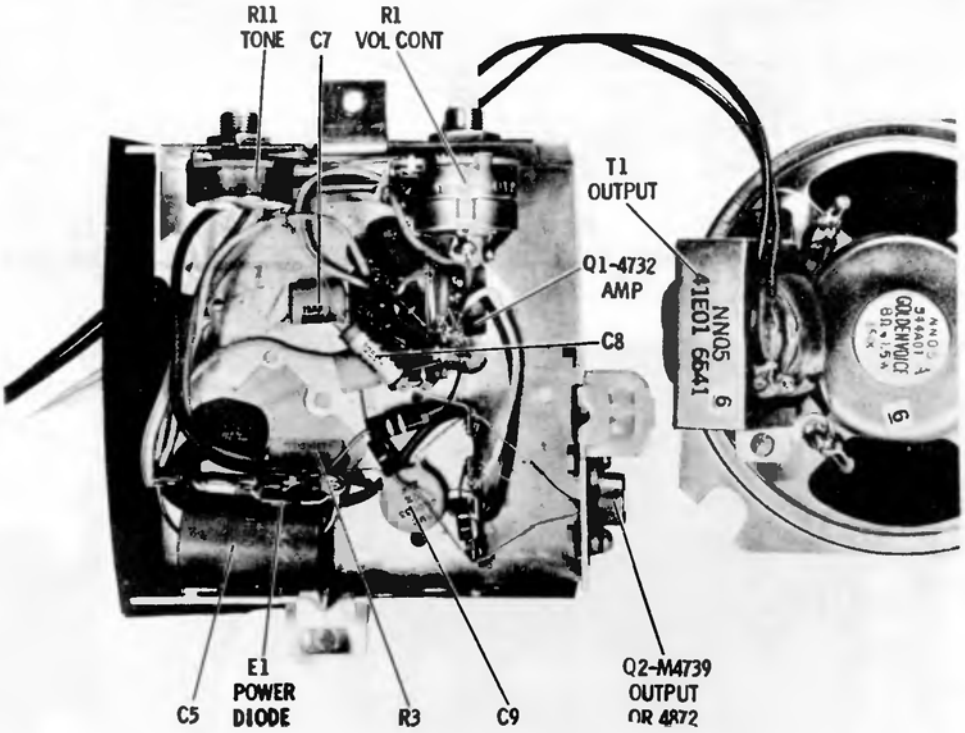


PARTS LOCATION

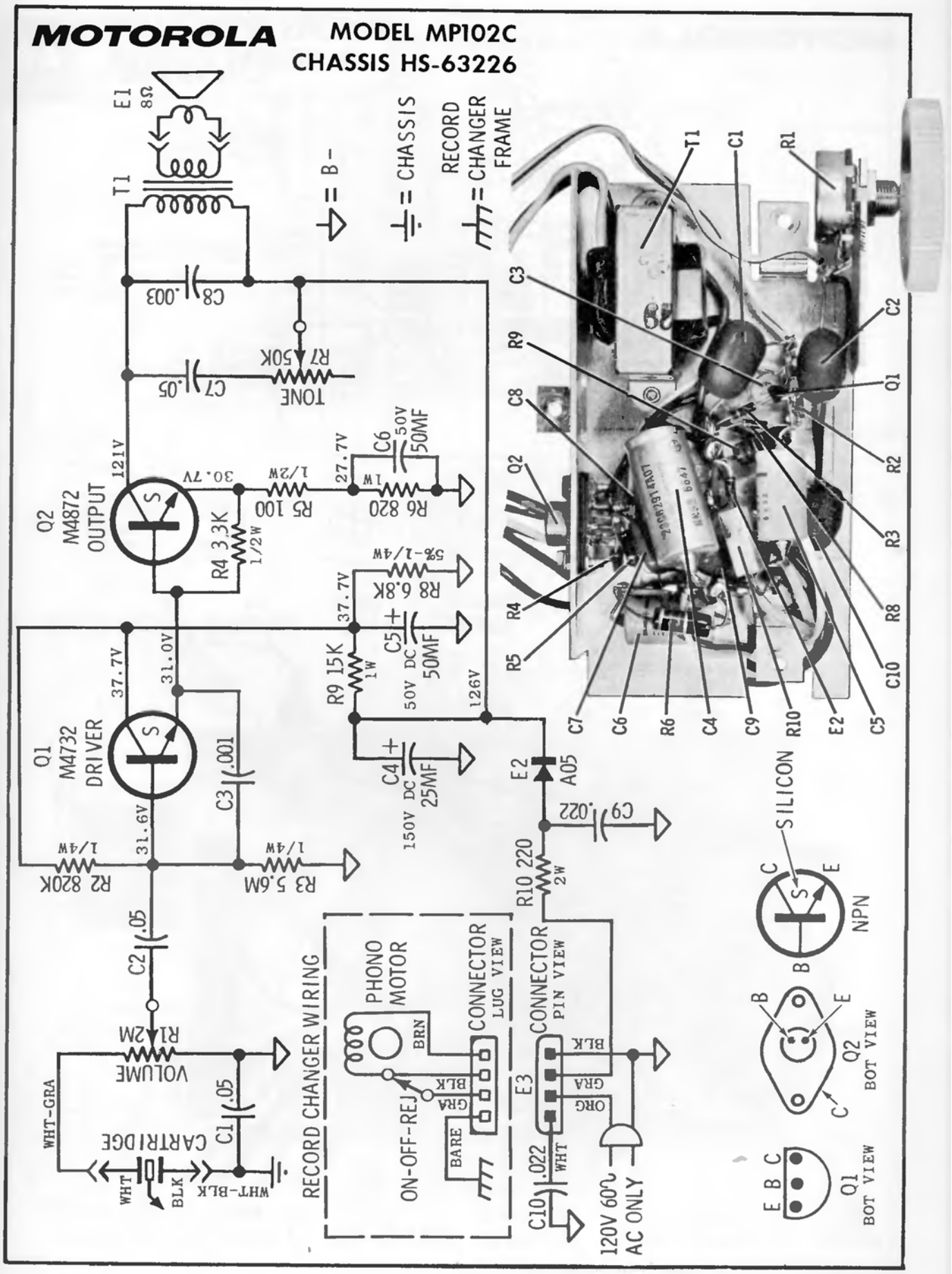
MOTOROLA
MODEL MP102C
CHASSIS HS-63226
E1 8Ω
T1
= B-
= CHASSIS
RECORD CHANGER FRAME
C8 .003
R7 50K TONE
C7 .05
Q2 M4872 OUTPUT
121V
30.7V
R5 100 1/2W
27.7V
C6 50V 50MF
R6 820 1W
R4 3.3K 1/2W
R8 6.8K 5%-1/4W
37.7V
C5 50V DC 50MF
R9 15K 1W
126V
Q1 M4732 DRIVER
37.7V
31.0V
C3 .001
C4 150V DC 25MF
E2 A05
C9 .022
31.6V
R2 820K 1/4W
R3 5.6M 1/4W
R10 220 2W
C2 .05
R1 2M VOLUME
WHT-GRA
C1 .05
CARTRIDGE
WHT
BLK
WHT-BLK
RECORD CHANGER WIRING
PHONO MOTOR
BRN
ON-OFF-REJ
BLK
GRA
BARE
CONNECTOR LUG VIEW
CONNECTOR PIN VIEW
E3
BLK
GRA
ORG
WHT
C10 .022
120V 60~ AC ONLY
SILICON
NPN
Q2 BOT VIEW
Q1 BOT VIEW
T1
C1
R1
C3
C2
R9
Q1
C8
R2
Q2
R3
R4
R8
R5
C10
C7
C6
R6
C4
C9
R10
E2
C5

**MOTOROLA**

# MODELS PP205C-1, PP206C-1

## CHASSIS HS-63230

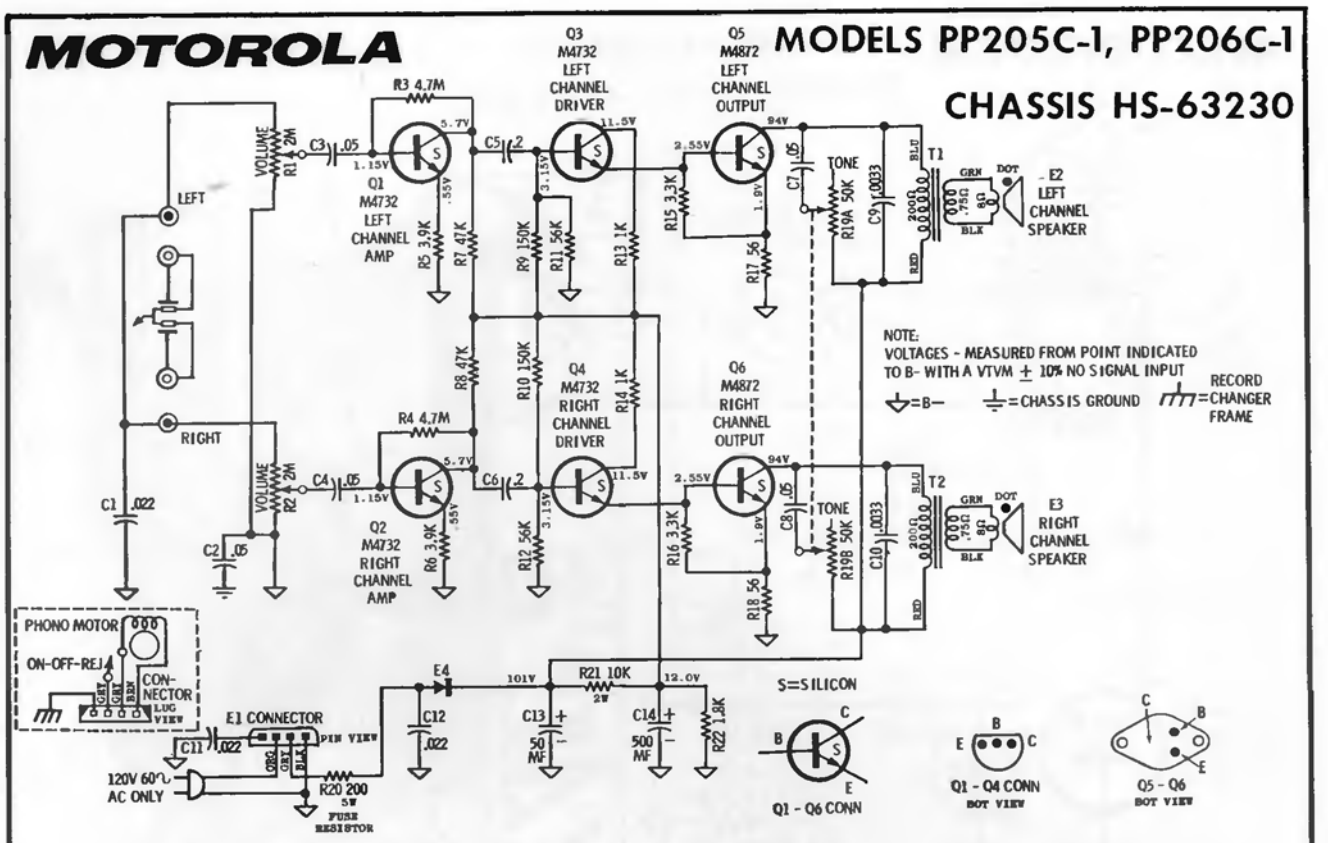


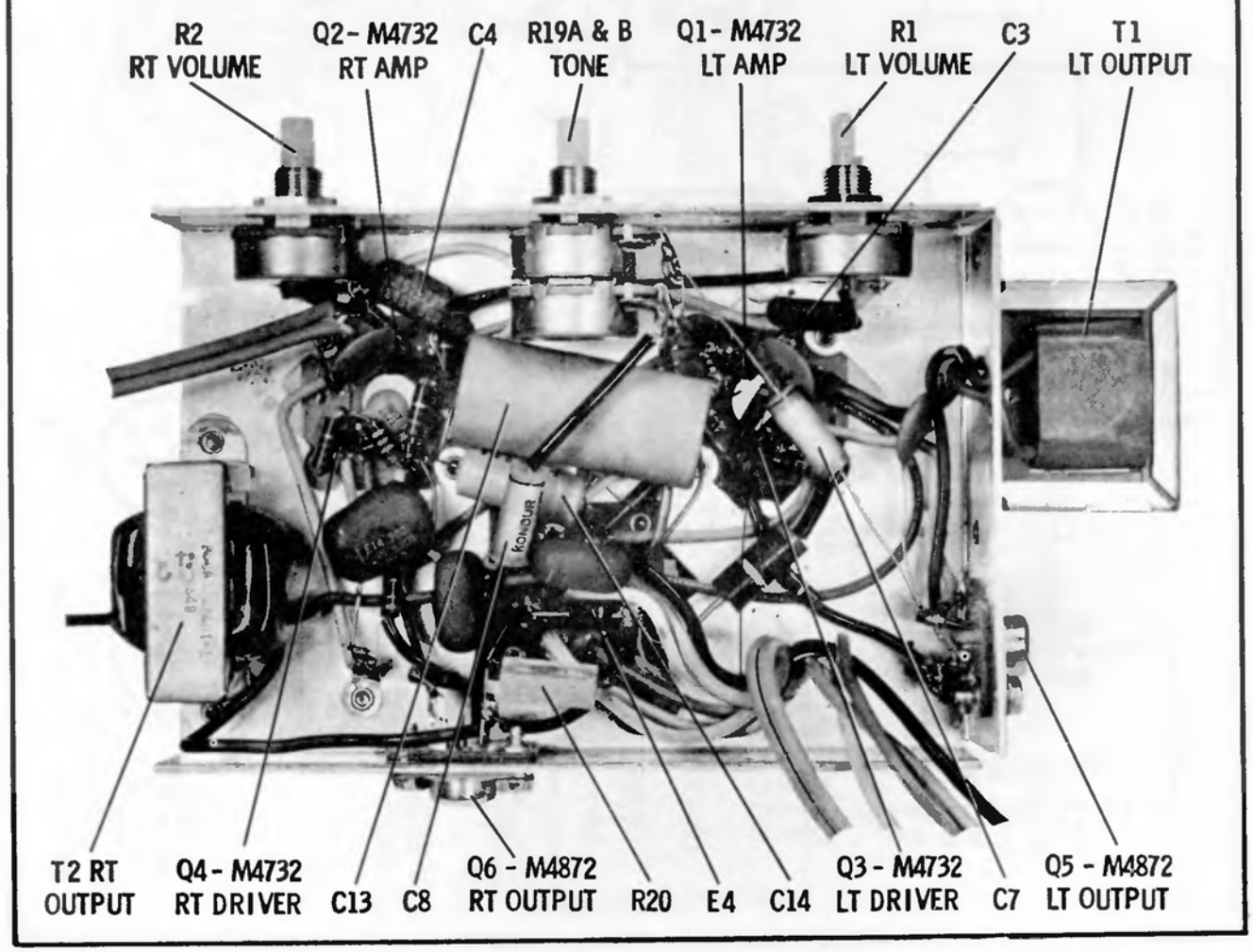

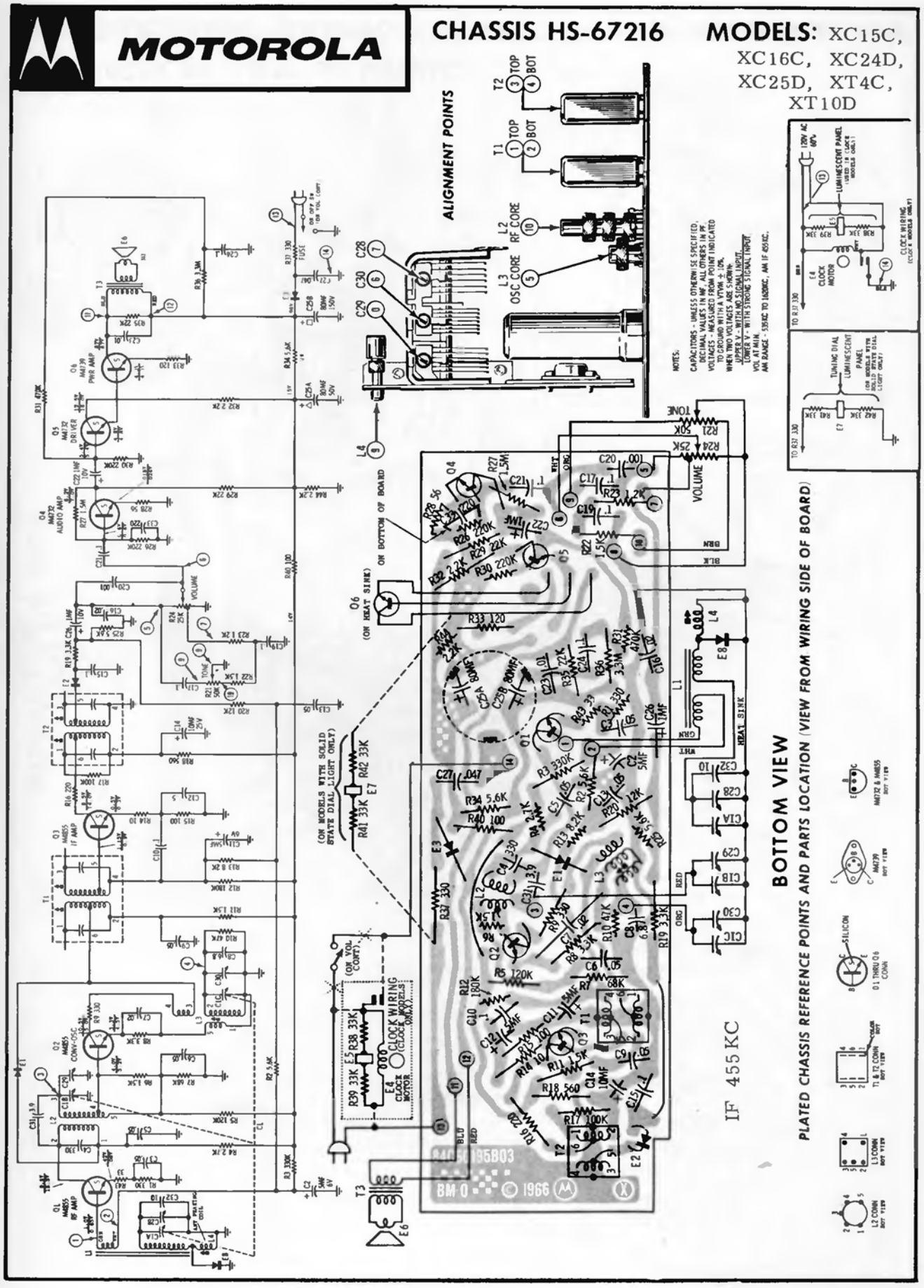
MOTOROLA
CHASSIS HS-67216
MODELS: XC15C, XC16C, XC24D, XC25D, XT4C, XT10D
ALIGNMENT POINTS
T2 TOP BOT
T1 TOP BOT
L2 RF CORE
L3 OSC CORE
C28
C30
C29
L4
NOTES:
CAPACITORS - UNLESS OTHERWISE SPECIFIED, DECIMAL VALUES IN MF, ALL OTHERS IN PF.
VOLTAGES - MEASURED FROM POINT INDICATED TO GROUND WITH A VTVM ± 10%.
WHEN TWO VOLTAGES ARE SHOWN:
UPPER V - WITH NO SIGNAL INPUT.
LOWER V - WITH STRONG SIGNAL INPUT.
VOL AT MIN.
AM RANGE - 535KC TO 1600KC, AM IF 455KC.
120V AC 60~
LUMINESCENT PANEL (USED IN CLOCK MODELS ONLY)
E4 CLOCK MOTOR
CLOCK WIRING (CLOCK MODELS ONLY)
TO R37 330
TUNING DIAL LUMINESCENT PANEL (ON MODELS WITH SOLID STATE DIAL LIGHT ONLY)
E7
TONE
R21 50K
R24 25K
VOLUME
Q4
R27 1.5M
C21 .1
C20 .001
C17 .1
R23 1.2K
C19 .1
R22 1.5K
Q5
R28 56
R29 22K
R30 220K
R32 2.2K
Q6 (ON HEAT SINK)
ON BOTTOM OF BOARD
R33 120
R31 470K
C19 .01
C26 1MF
L1
L4
E8
HEAT SINK
Q1
R43 39
R44 330
R35 72K
R36 3.3M
C23 .01
C24 .1
C25A 80MF
C25B 80MF
C27 .047
R34 5.6K
R40 100
R41 33K
R42 33K
E7
(ON MODELS WITH SOLID STATE DIAL LIGHT ONLY)
E3
R37 330
R2 330K
R3 5.6K
C5 .05
C13 .05
R20 12K
C2 5MF
C4 330
C31 3.9
E1
L3
R6 1.5K
Q2
R9 330
R10 47K
C8 6.8
R19 3.3K
R8 3.3K
C7 .01
C6 .05
R5 120K
R12 180K
C10 .1
C11 15MF
C12 .1MF
R13 100
R14 10
R11 1.5K
Q3
R7 68K
T1
C9 .05
R18 560
C14 10MF
C15 .1
R17 100K
R16 220
T2
E2
R4 2.7K
R24 25K
VOLUME
R25 5.6K
R23 1.2K
R22 1.5K
R21 50K
TONE
R19 3.3K
C20 .001
C16 .02
C15
E2
T2
R18 560
C14 10MF 25V
R17 100K
R16 220
Q3 MA855 IF AMP
R14 10
R15 100
C12
C10 .1
R13 1.2K
R12 10K
R11 1.5K
C11 15MF
R10 47K
C9 .05
C8 .1
R9 330
Q2 MA855 CONV-OSC
R8 3.3K
C7 .01
C6 .05
R7 68K
R6 1.5K
R5 120K
R4 2.7K
R3 330K
C2 .1MF 30V
Q1 MA855 RF AMP
R1 330
R2 5.6K
C1 .1
E1
E8
T3
E6
R36 3.3K
R35 22K
R34 5.6K
R33 330K
R32 2.2K
R31 470K
R30 3.3K
R29 22K
R28 56
R27 1.5M
R26 220K
R25 5.6K
R24 25K
R23 1.2K
R22 1.5K
R21 50K
R20 12K
R19 3.3K
R18 560
R17 100K
R16 220
R15 100
R14 10
R13 1.2K
R12 10K
R11 1.5K
R10 47K
R9 330
R8 3.3K
R7 68K
R6 1.5K
R5 120K
R4 2.7K
R3 330K
R2 5.6K
R1 330
R37 330
R38 33K
R39 33K
E5
E4 CLOCK MOTOR
CLOCK WIRING (CLOCK MODELS ONLY)
(ON VOL. CONT.)
BLU
RED
BM 0 © 1966
IF 455 KC
BOTTOM VIEW
PLATED CHASSIS REFERENCE POINTS AND PARTS LOCATION (VIEW FROM WIRING SIDE OF BOARD)
L2 CONN BOT VIEW
L3 CONN BOT VIEW
T1 & T2 CONN BOT VIEW
Q1 THRU Q6 CONN
SILICON
MA855 BOT VIEW
MA732 & MA855 BOT VIEW

**MOTOROLA**

# MODELS TP11C & TP12C
# CHASSIS HS-66212, HS-66209

(Continued on next page.)

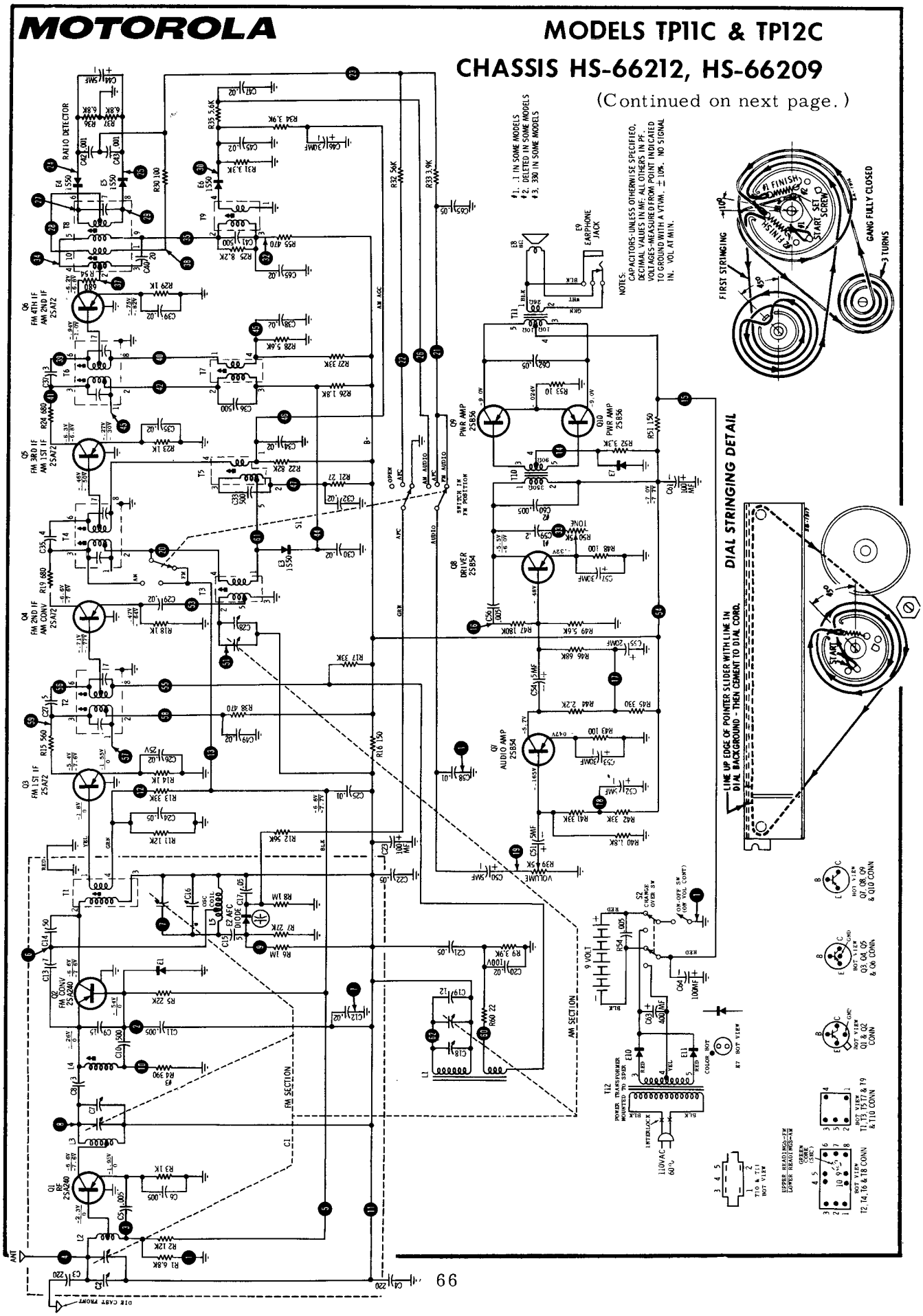

 (Continued from preceding page.)

## MODELS TP11C & TP12C

### BOTTOM VIEW

PLATED CHASSIS REFERENCE POINTS AND PARTS LOCATION (VIEW FROM WIRING SIDE OF BOARD)

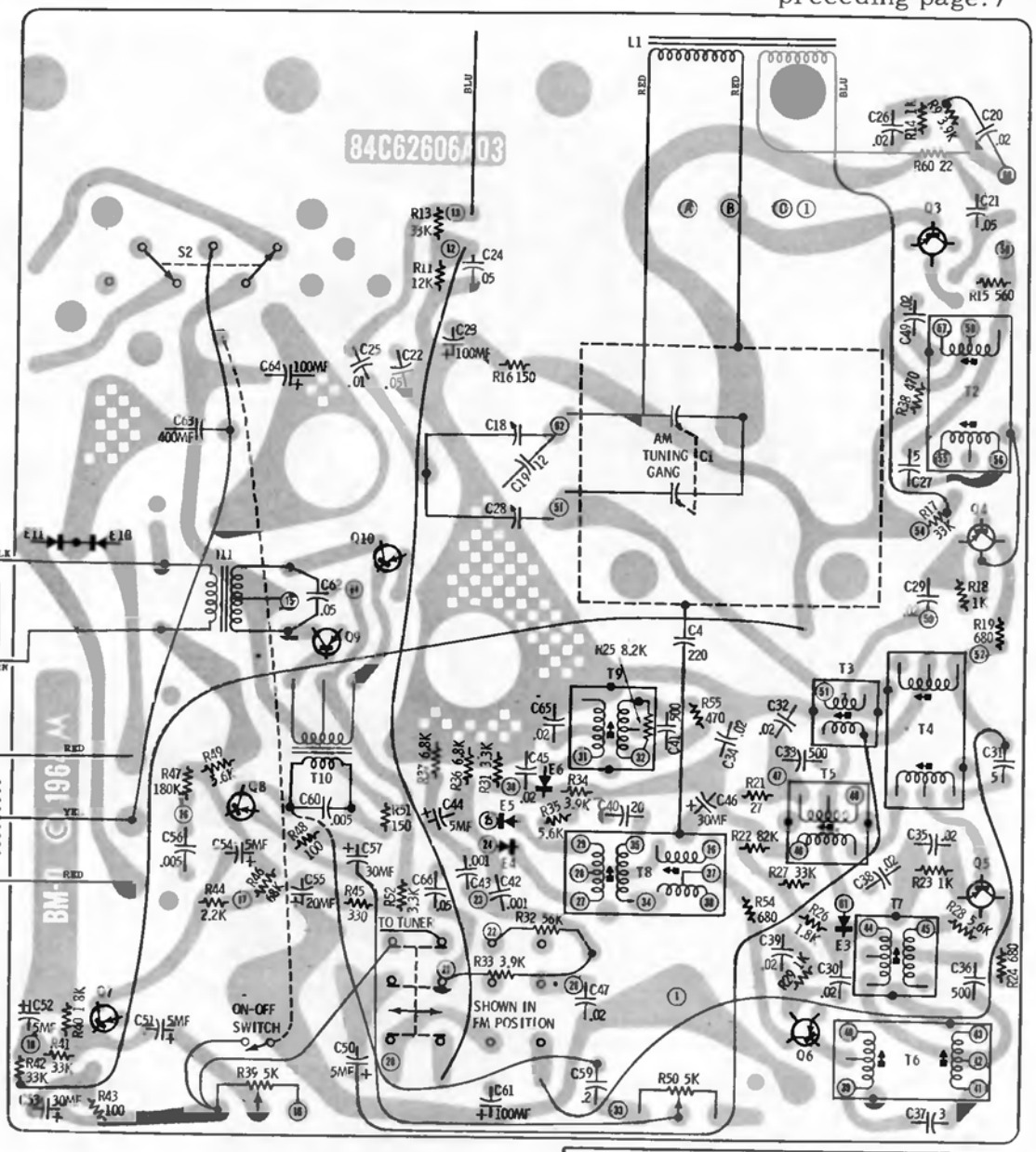


*ALIGNMENT POINTS*

1. RATIO DET 10.7MC
2. 
3. IF 10.7MC
4. 
5. IF 10.7MC
6. 
7. IF 10.7MC
8. 
9. IF 10.7MC
10. OSC TRIM 108.5MC
11. OSC COIL 87.5MC
12. RF TRIM 106MC
13. ANT TRIM 106MC
14. RF COIL (PRI) 90MC
15. ANT COIL 90MC
16. RF CORE (SEC) 98MC
17. IF 455KC
18. IF 455KC
19. IF 455KC
20. OSC TRIM 1620KC
21. ANT TRIM 1400KC
22. OSC CORE 532KC

### FM TUNER BOARD REFERENCE POINTS BOTTOM VIEW

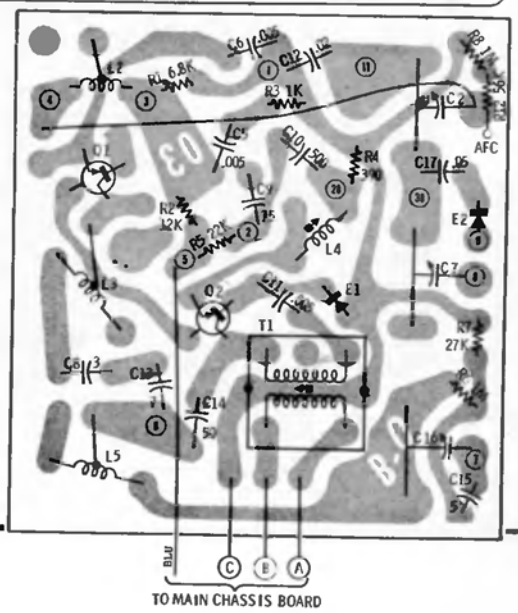

# MOTOROLA MODEL TP10D

## CHASSIS HS-66227

(Continued on next page.)

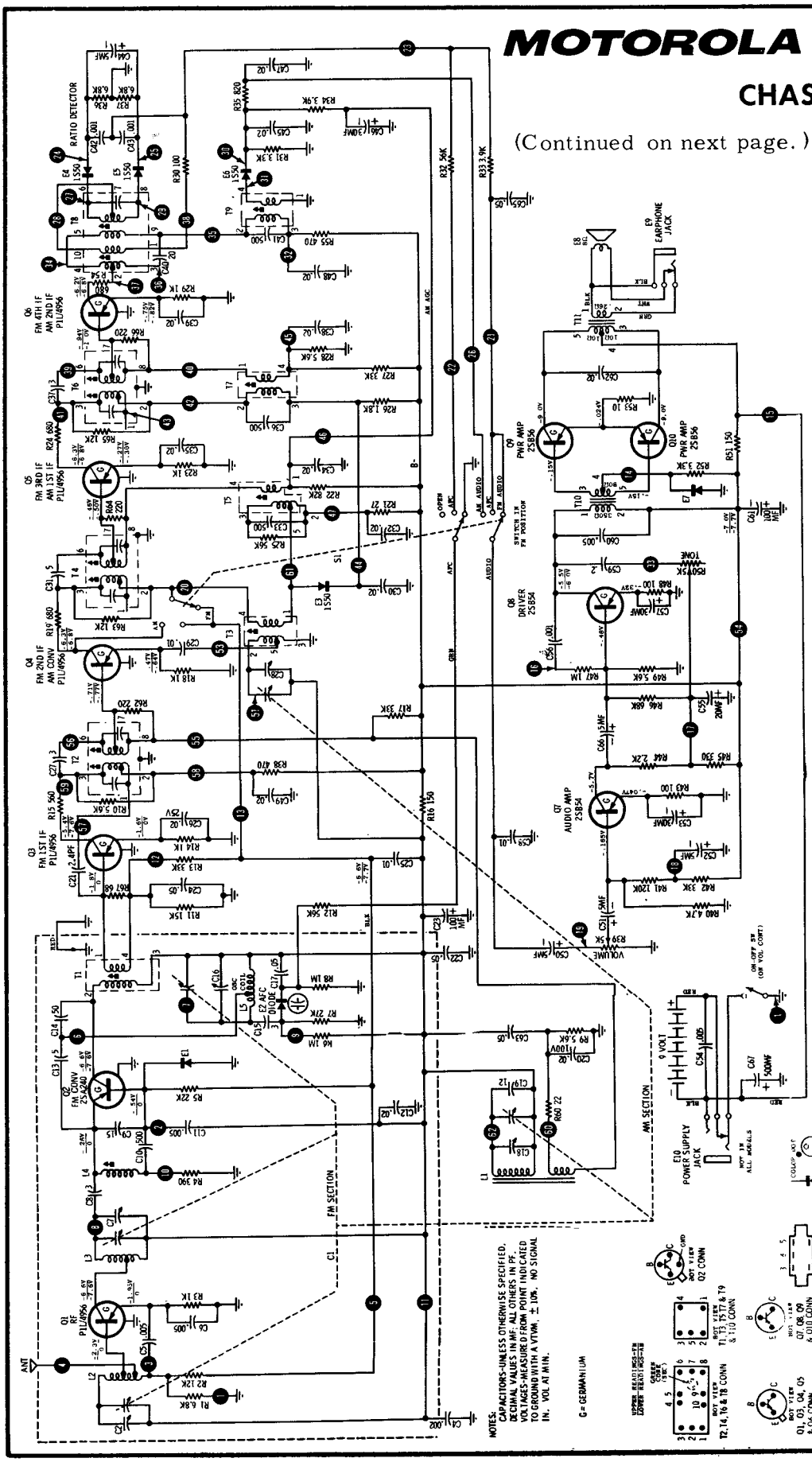


### CHASSIS REMOVAL

1. Remove 3 cabinet back mounting screws; 2 are located at top of cabinet (under carrying handle), the other screw is located on bottom of cabinet.

2. Remove the earphone jack mounting nut (a special tool is available - order Part Number 66A6462111).

3. Separate cabinet back from front escutcheon far enough to gain access to chassis, then unsolder yellow lead from monopole FM antenna.

4. To remove chassis completely, first remove control knobs from front of radio.

5. Remove 6 chassis and 1 dial background mounting screws.

6. If necessary, unsolder speaker leads, then remove chassis from escutcheon.

### TUNING RANGE

FM - 88 to 108Mc (FM IF - 10.7Mc).

AM - 535 to 1620Kc (AM IF - 455Kc).

(Continued from preceding page.)

## DIAL STRINGING DETAIL

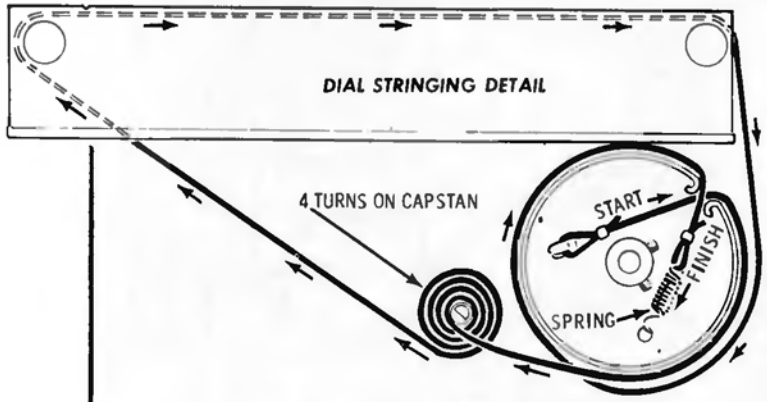


1. GANG FULLY OPEN (LARGE PULLEY CW). INSTALL STRING.
2. CLOSE GANG (LARGE PULLEY CCW) AND FASTEN POINTER SLIDE TO STRING WITH POINTER DIRECTLY OVER ZERO (0) ON LOG SCALE.

## BOTTOM VIEW

### PARTS LOCATION - FM TUNER

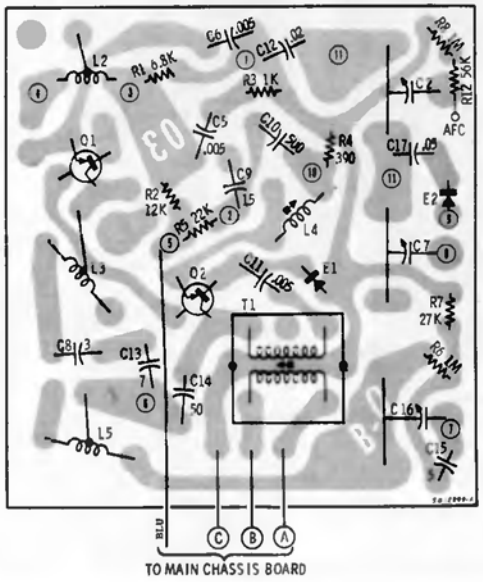


## BOTTOM VIEW

### PLATED CHASSIS REFERENCE POINTS AND PARTS LOCATION

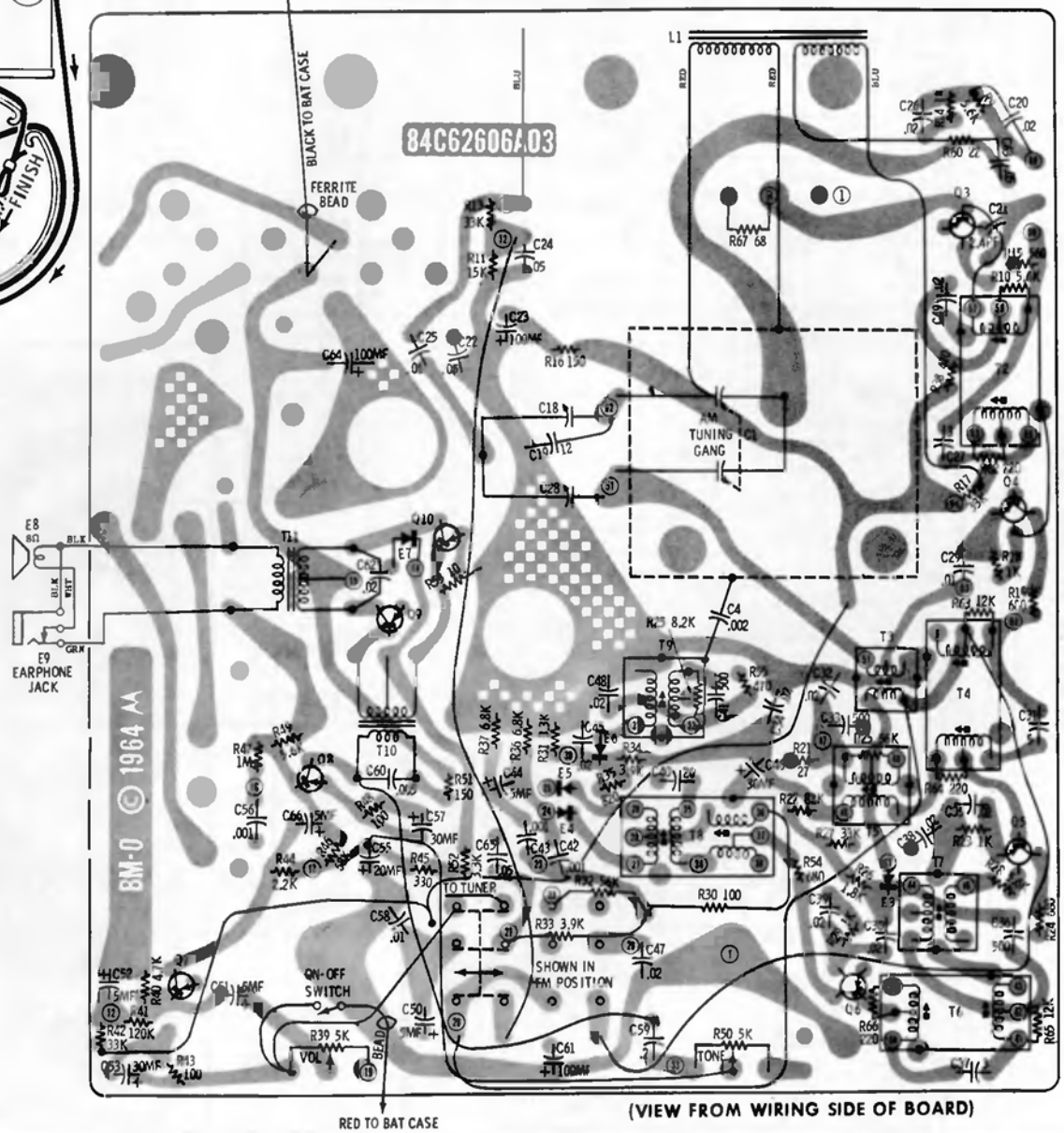


(VIEW FROM WIRING SIDE OF BOARD)

# MOTOROLA MODEL TT22C

## CHASSIS HS-67206

(Continued on next page.)

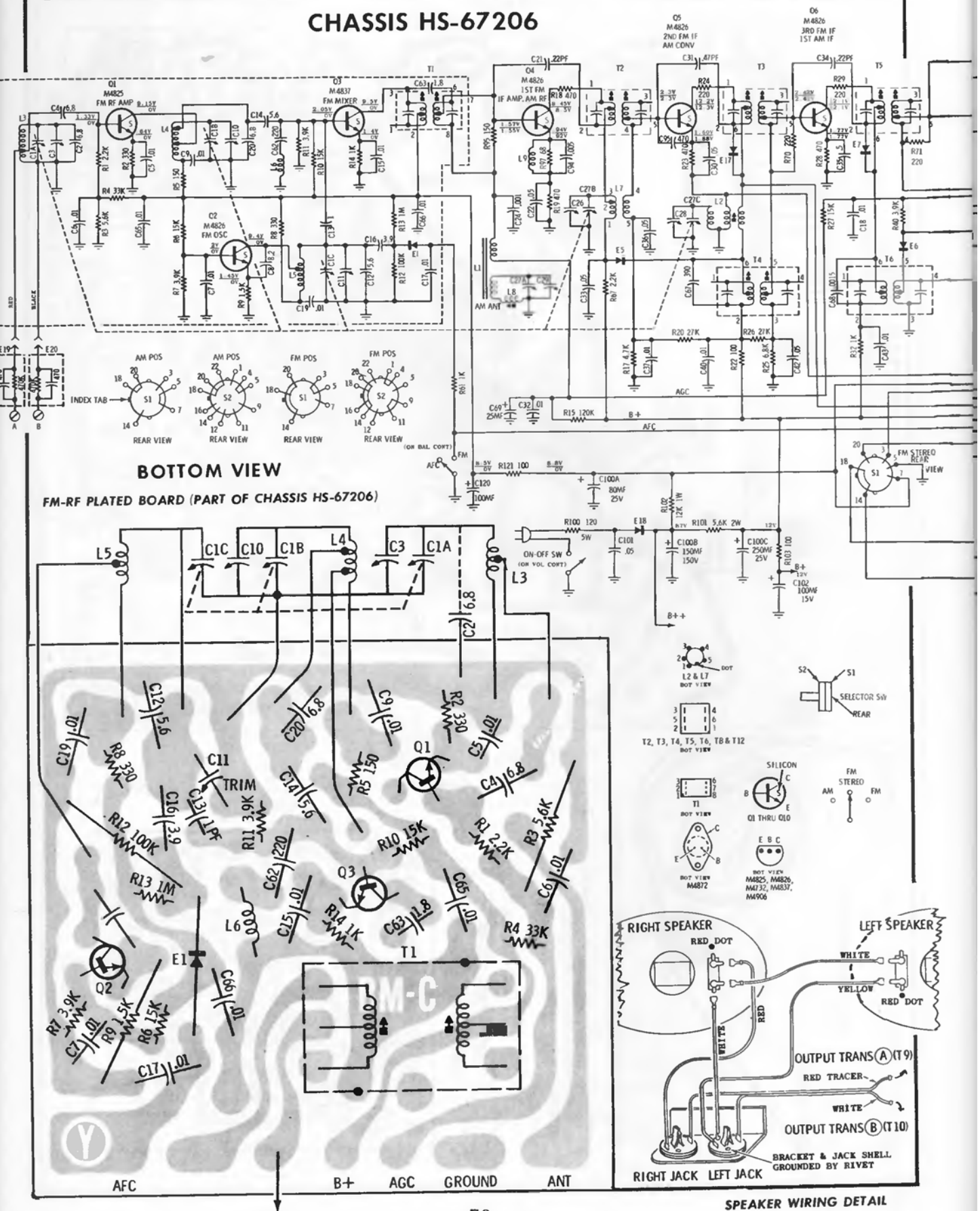


**BOTTOM VIEW**

*FM-RF PLATED BOARD (PART OF CHASSIS HS-67206)*




*SPEAKER WIRING DETAIL*

**MOTOROLA** MODEL TT22C CHASSIS HS-67206 (Continued from preceding page.)

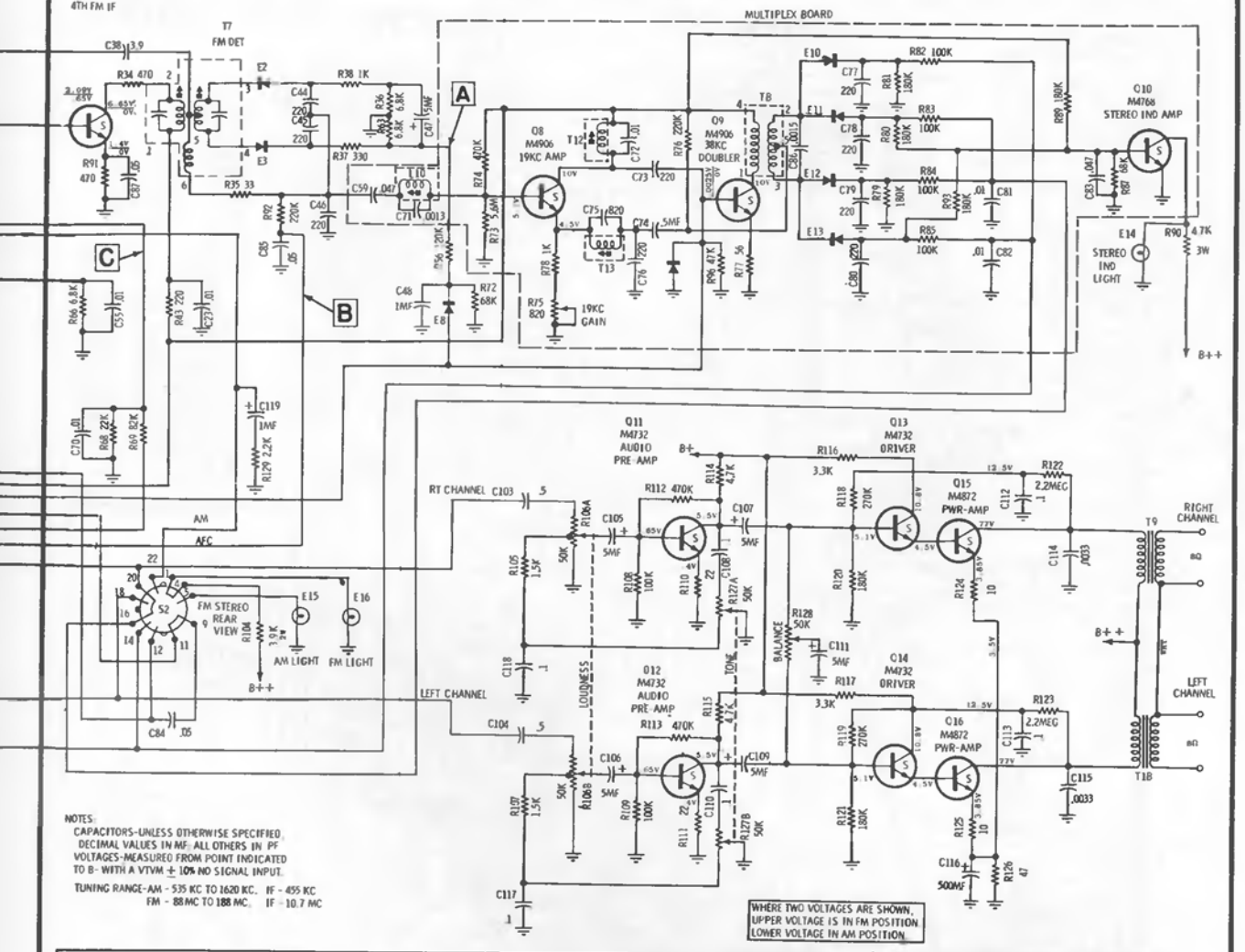


NOTES:
CAPACITORS-UNLESS OTHERWISE SPECIFIED, DECIMAL VALUES IN MF, ALL OTHERS IN PF
VOLTAGES-MEASURED FROM POINT INDICATED TO B- WITH A VTVM ± 10% NO SIGNAL INPUT.
TUNING RANGE-AM - 535 KC TO 1620 KC. IF - 455 KC
FM - 88 MC TO 108 MC. IF - 10.7 MC

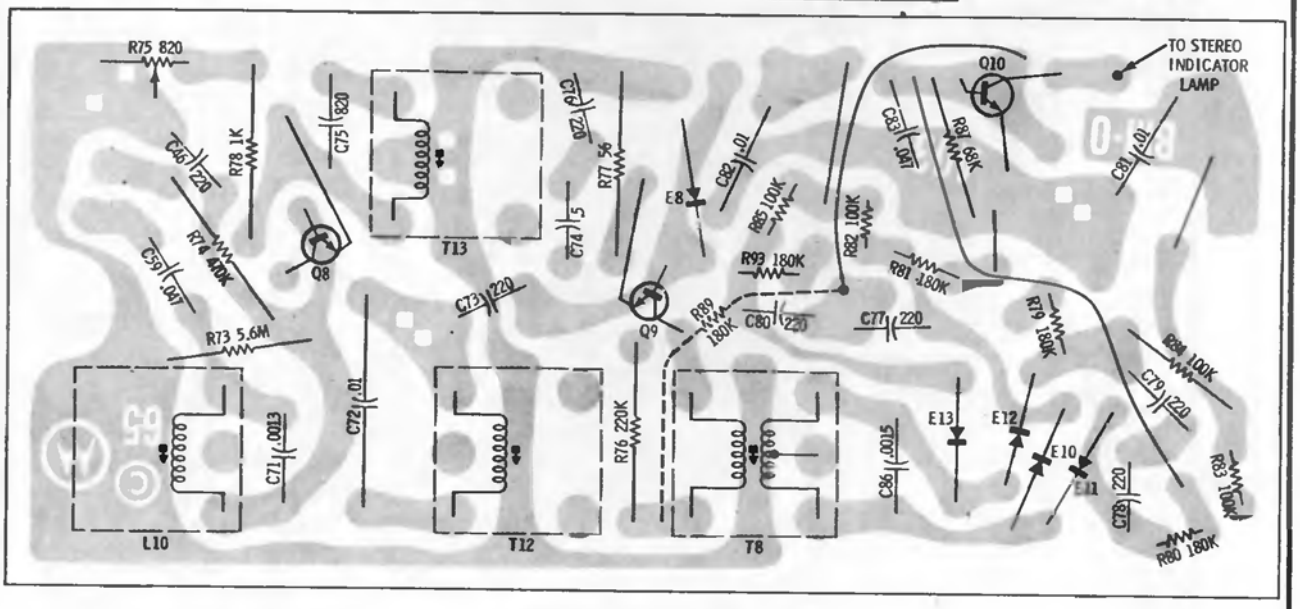


**BOTTOM VIEW**

*MULTIPLEX CIRCUIT BOARD (PART OF HS-67206)*

# MOTOROLA

(Continued on next page.)

## MODELS
## TC11C, 13C
## TT18C, 20C

## CHASSIS
## HS-68212
## HS-67211

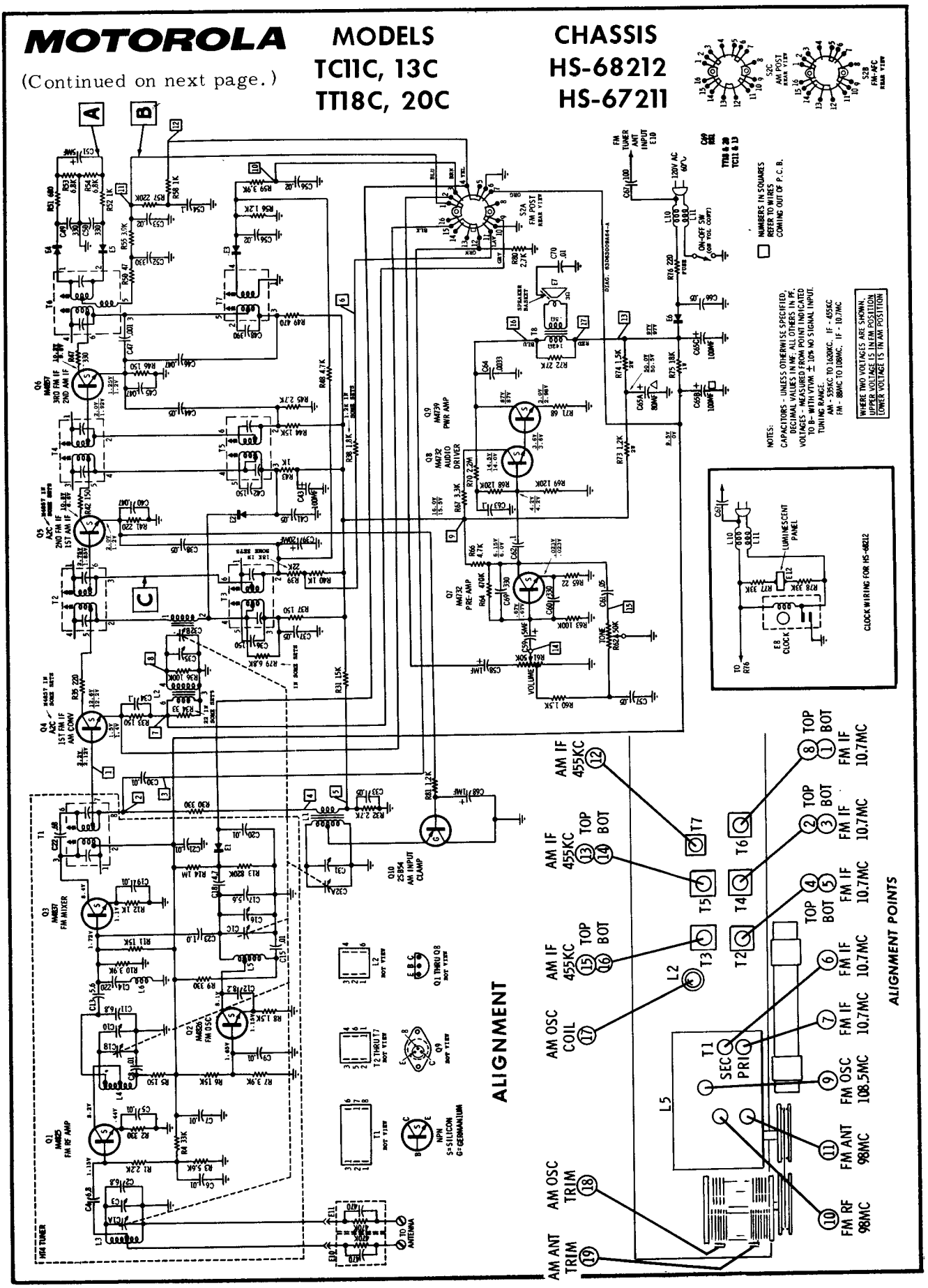

**MOTOROLA** MODELS TC11C, 13C TT18C, 20C CHASSIS HS-68212 HS-67211

(Continued from preceding page.)

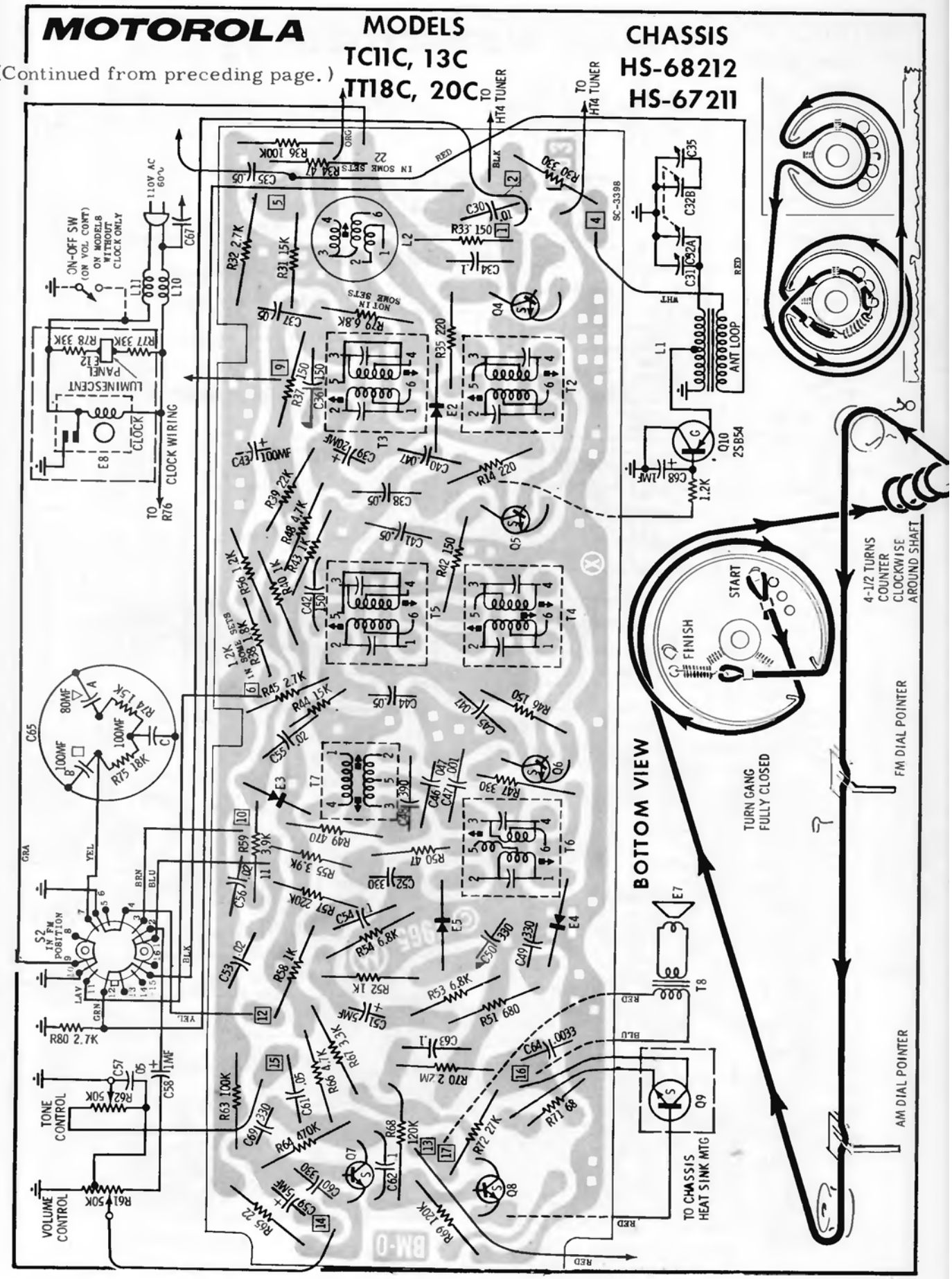

MOTOROLA Chassis HS-68214, HS-67214; Models TC12C, TC14C, TT19C, TT21C

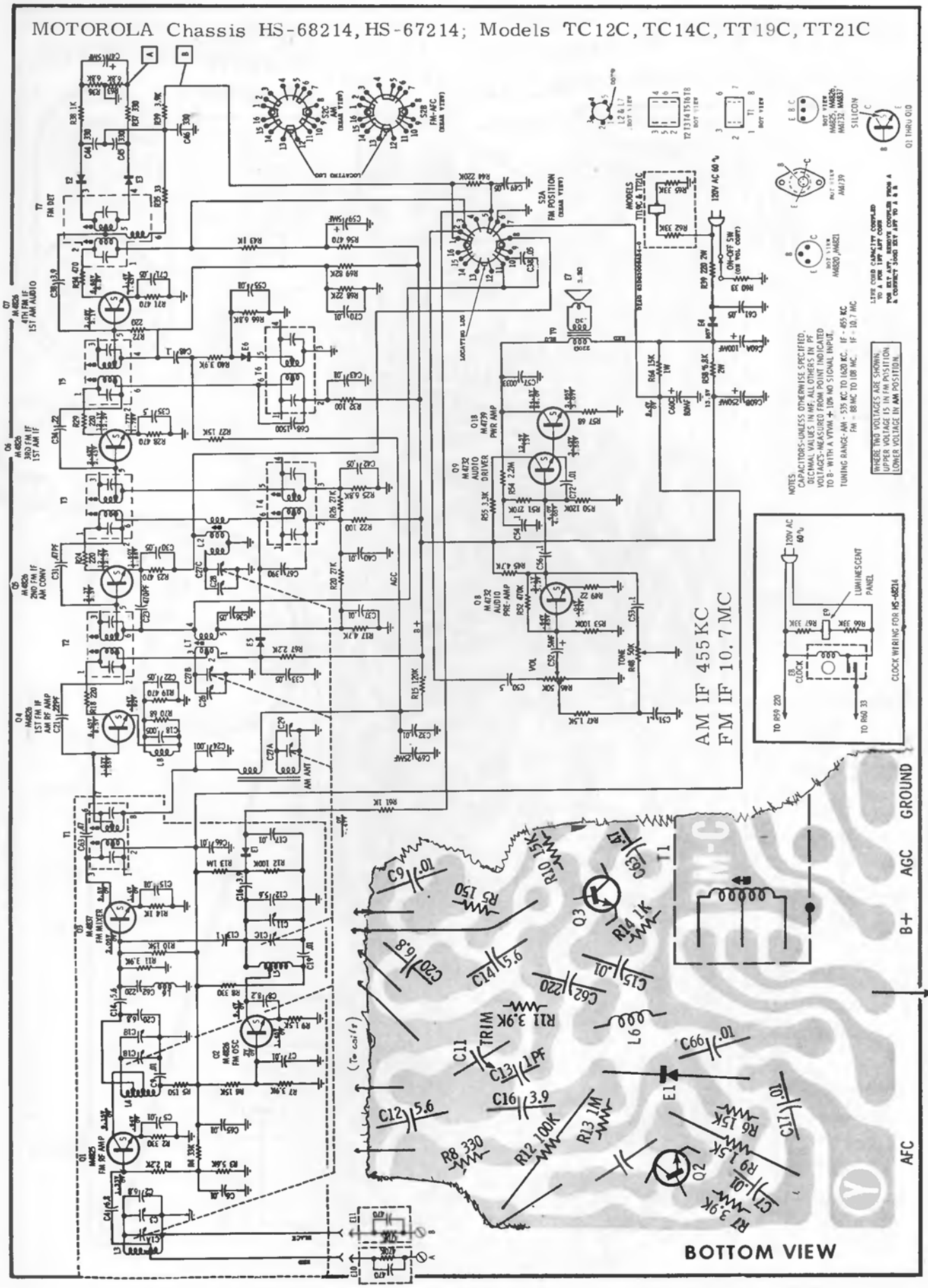

# MOTOROLA MODEL TP1D

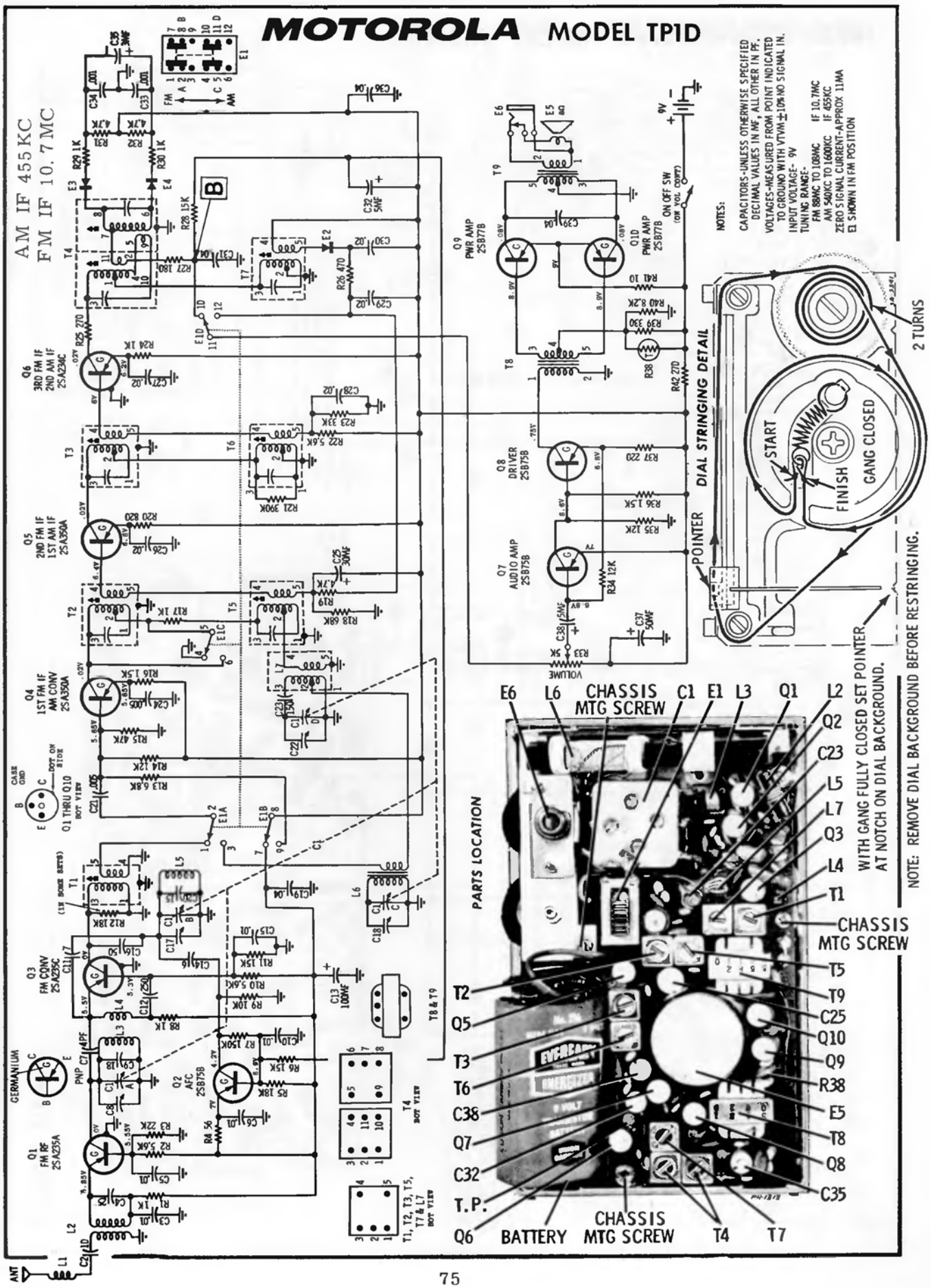

# MOTOROLA MODEL TM318M

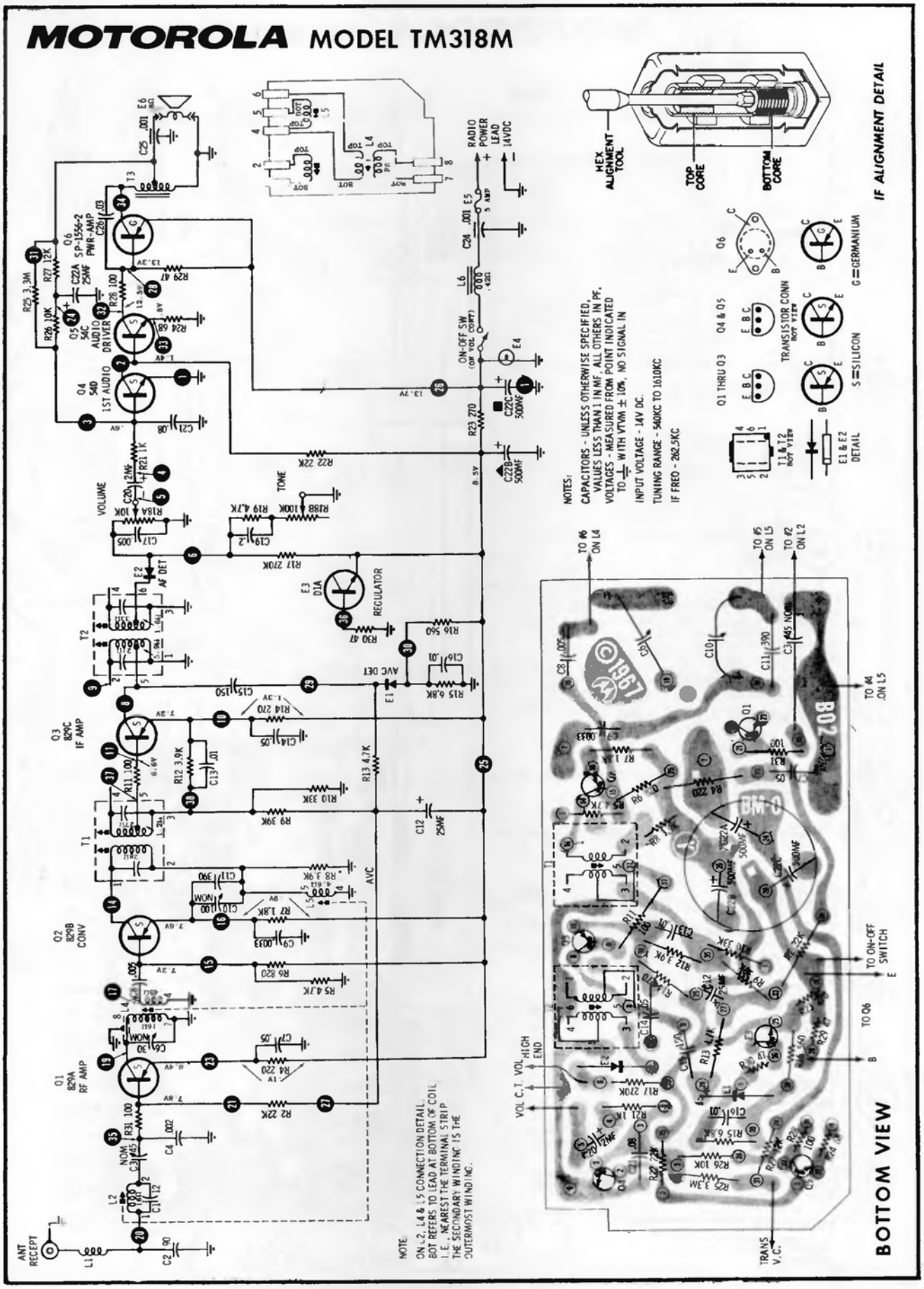

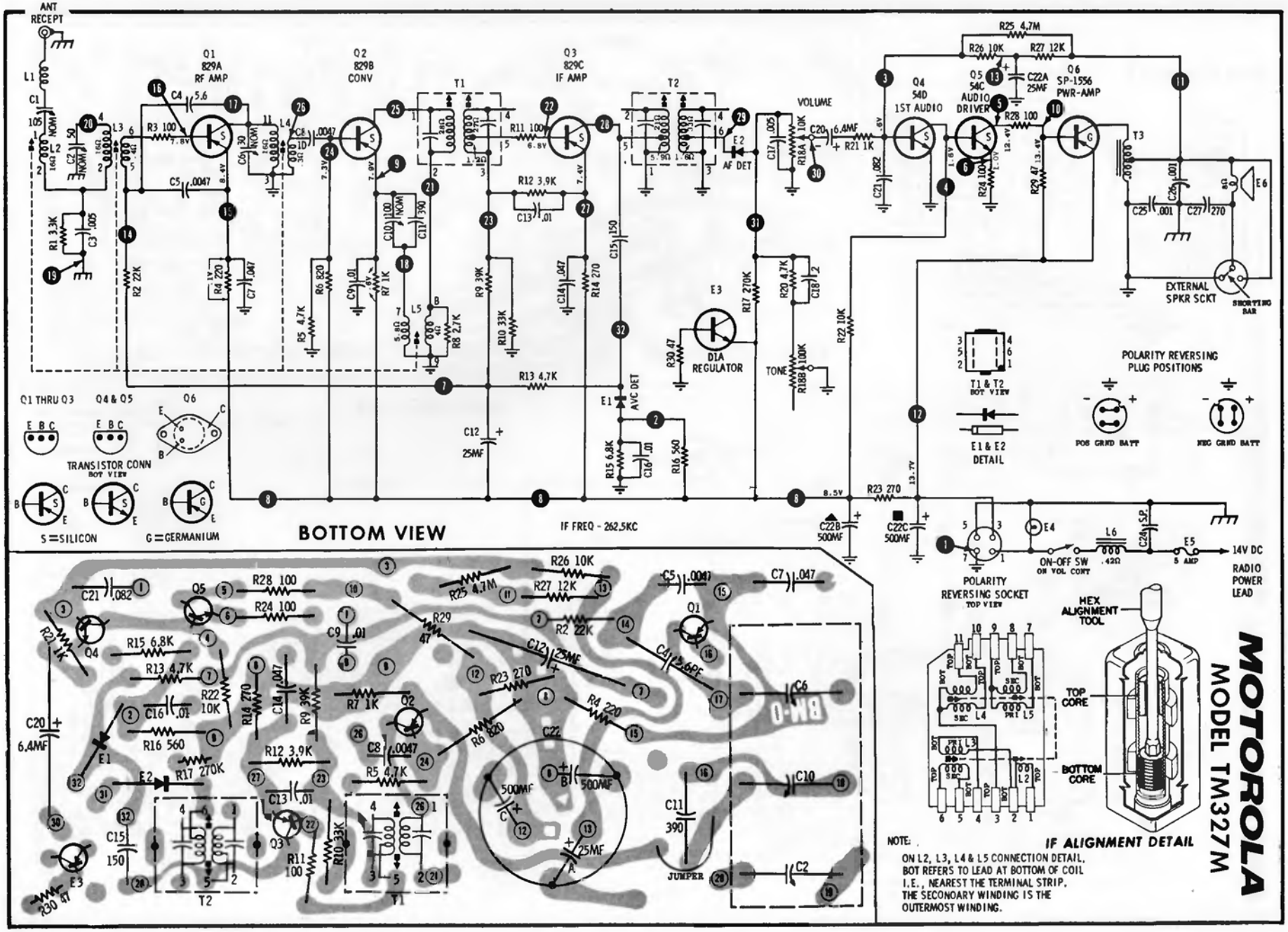
MOTOROLA
MODEL TM327M
BOTTOM VIEW
IF FREQ - 262.5KC
Q1 829A RF AMP
Q2 829B CONV
Q3 829C IF AMP
Q4 54D 1ST AUDIO
Q5 54C AUDIO DRIVER
Q6 SP-1556 PWR-AMP
ANT RECEPT
VOLUME
AF DET
AVC DET
DIA REGULATOR
TONE
EXTERNAL SPKR SCKT
SHORTING BAR
Q1 THRU Q3
Q4 & Q5
Q6
TRANSISTOR CONN BOT VIEW
S=SILICON
G=GERMANIUM
T1 & T2 BOT VIEW
E1 & E2 DETAIL
POLARITY REVERSING PLUG POSITIONS
POS GRND BATT
NEG GRND BATT
POLARITY REVERSING SOCKET TOP VIEW
ON-OFF SW ON VOL CONT
14V DC RADIO POWER LEAD
HEX ALIGNMENT TOOL
TOP CORE
BOTTOM CORE
IF ALIGNMENT DETAIL
NOTE:
ON L2, L3, L4 & L5 CONNECTION DETAIL, BOT REFERS TO LEAD AT BOTTOM OF COIL I.E., NEAREST THE TERMINAL STRIP. THE SECONDARY WINDING IS THE OUTERMOST WINDING.
JUMPER

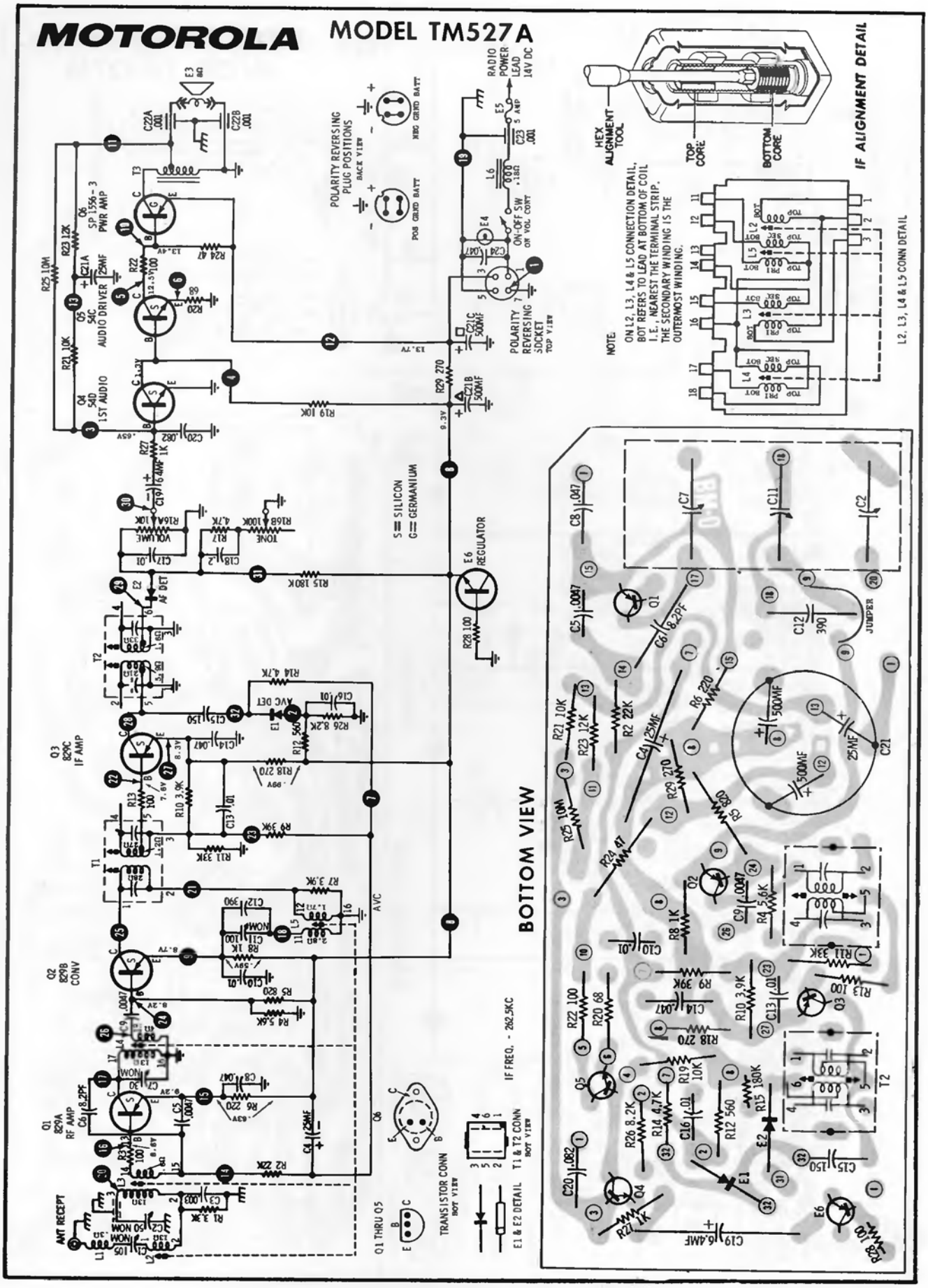
MOTOROLA
MODEL TM527A
POLARITY REVERSING PLUG POSITIONS
BACK VIEW
NEG GRND BATT
POS GRND BATT
RADIO POWER LEAD 14V DC
ON-OFF SW ON VOL CONT
POLARITY REVERSING SOCKET
TOP VIEW
HEX ALIGNMENT TOOL
TOP CORE
BOTTOM CORE
IF ALIGNMENT DETAIL
NOTE:
ON L2, L3, L4 & L5 CONNECTION DETAIL, BOT REFERS TO LEAD AT BOTTOM OF COIL I.E., NEAREST THE TERMINAL STRIP. THE SECONDARY WINDING IS THE OUTERMOST WINDING.
L2, L3, L4 & L5 CONN DETAIL
S = SILICON
G = GERMANIUM
BOTTOM VIEW
IF FREQ. - 262.5KC
ANT RECEPT
Q1 829A RF AMP
Q2 829B CONV
Q3 829C IF AMP
Q4 540 1ST AUDIO
Q5 540 AUDIO DRIVER
Q6 SP 1556-3 PWR AMP
E6 REGULATOR
VOLUME
TONE
AF DET
AVC DET
AVC
JUMPER
TRANSISTOR CONN BOT VIEW
Q1 THRU Q5
E1 & E2 DETAIL
T1 & T2 CONN BOT VIEW

# MOTOROLA MODEL TM826A

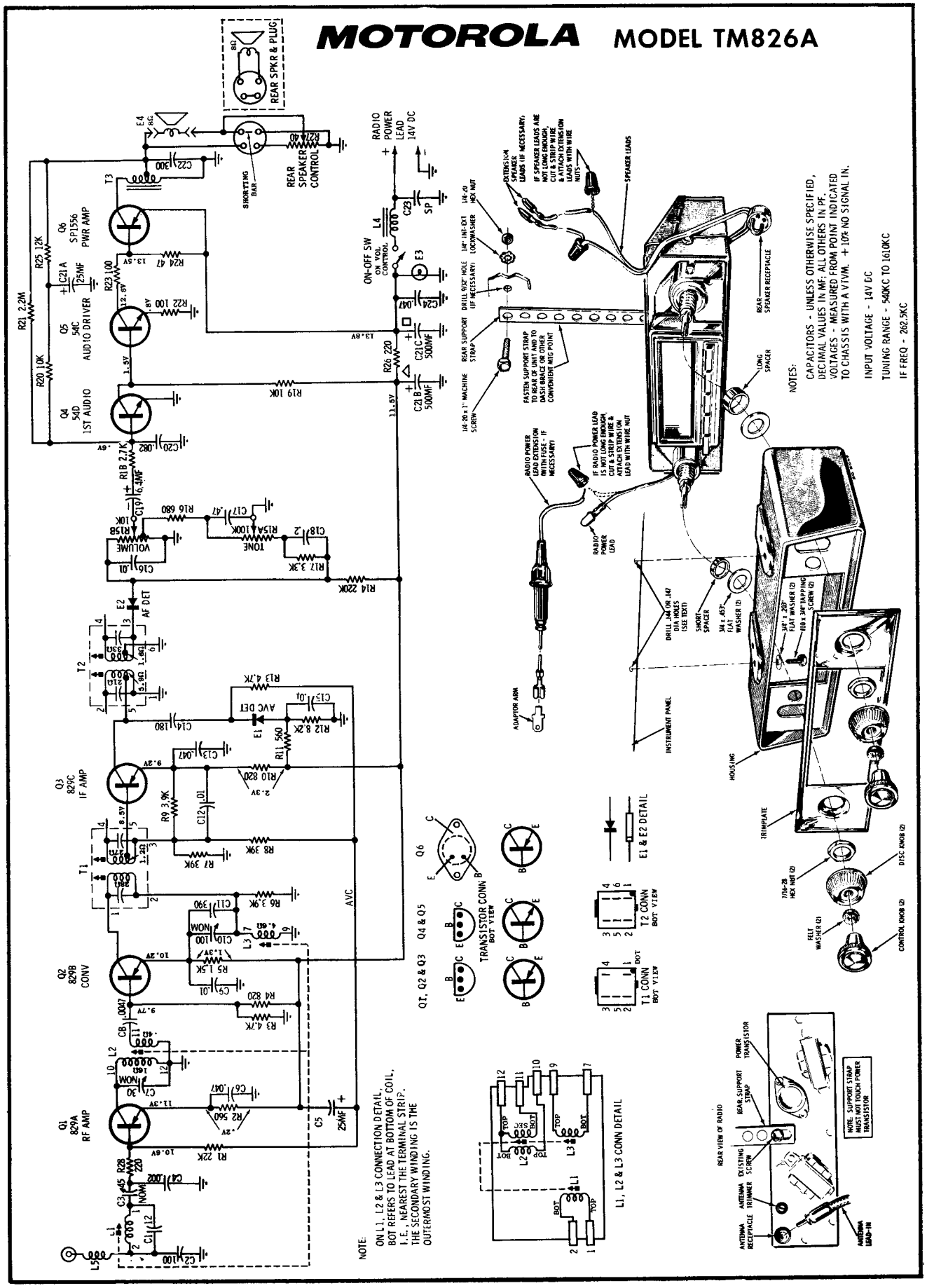

# MOTOROLA

## MODELS XP19D, XP20D

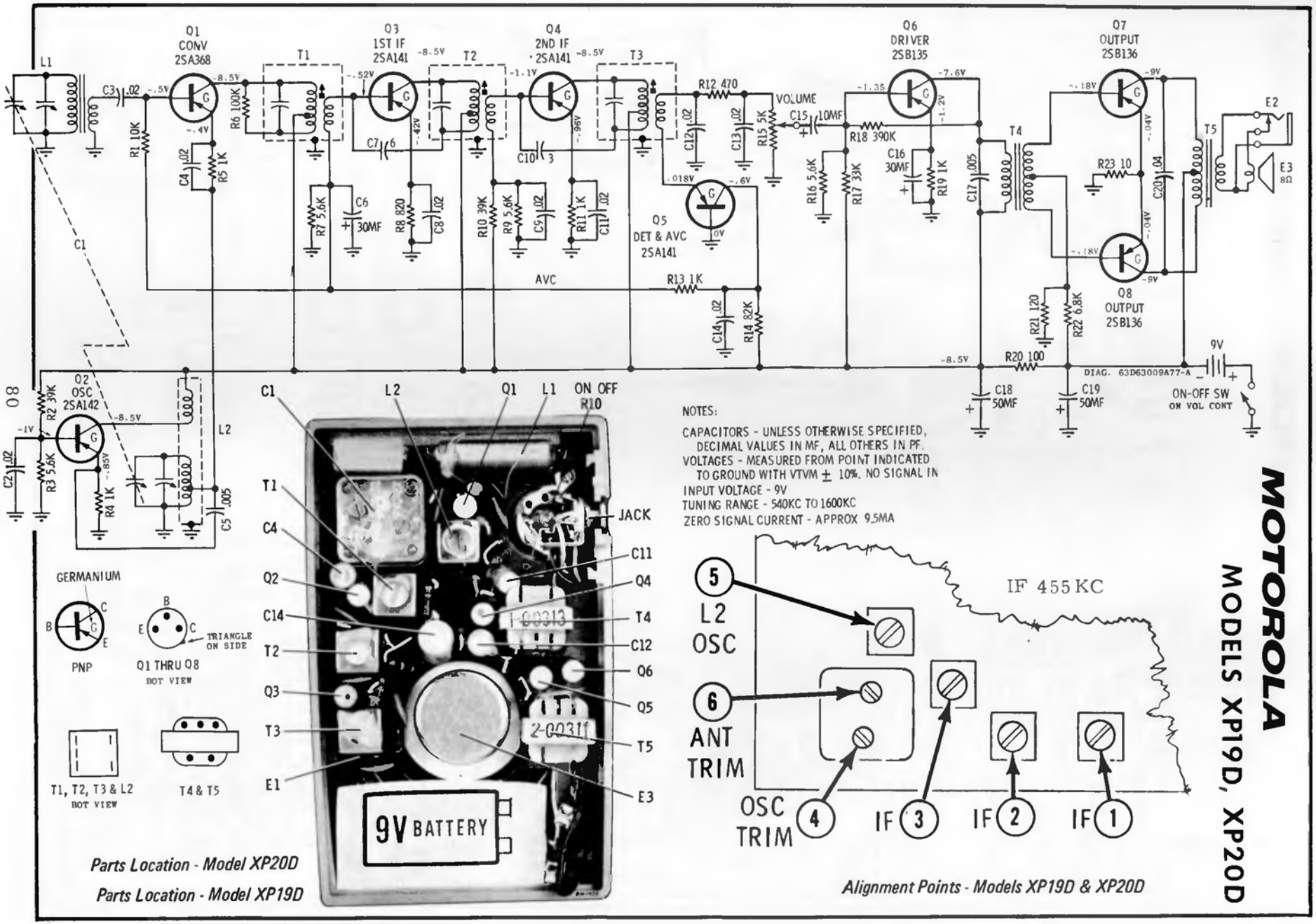

# MOTOROLA MODELS XP22D, XP23D

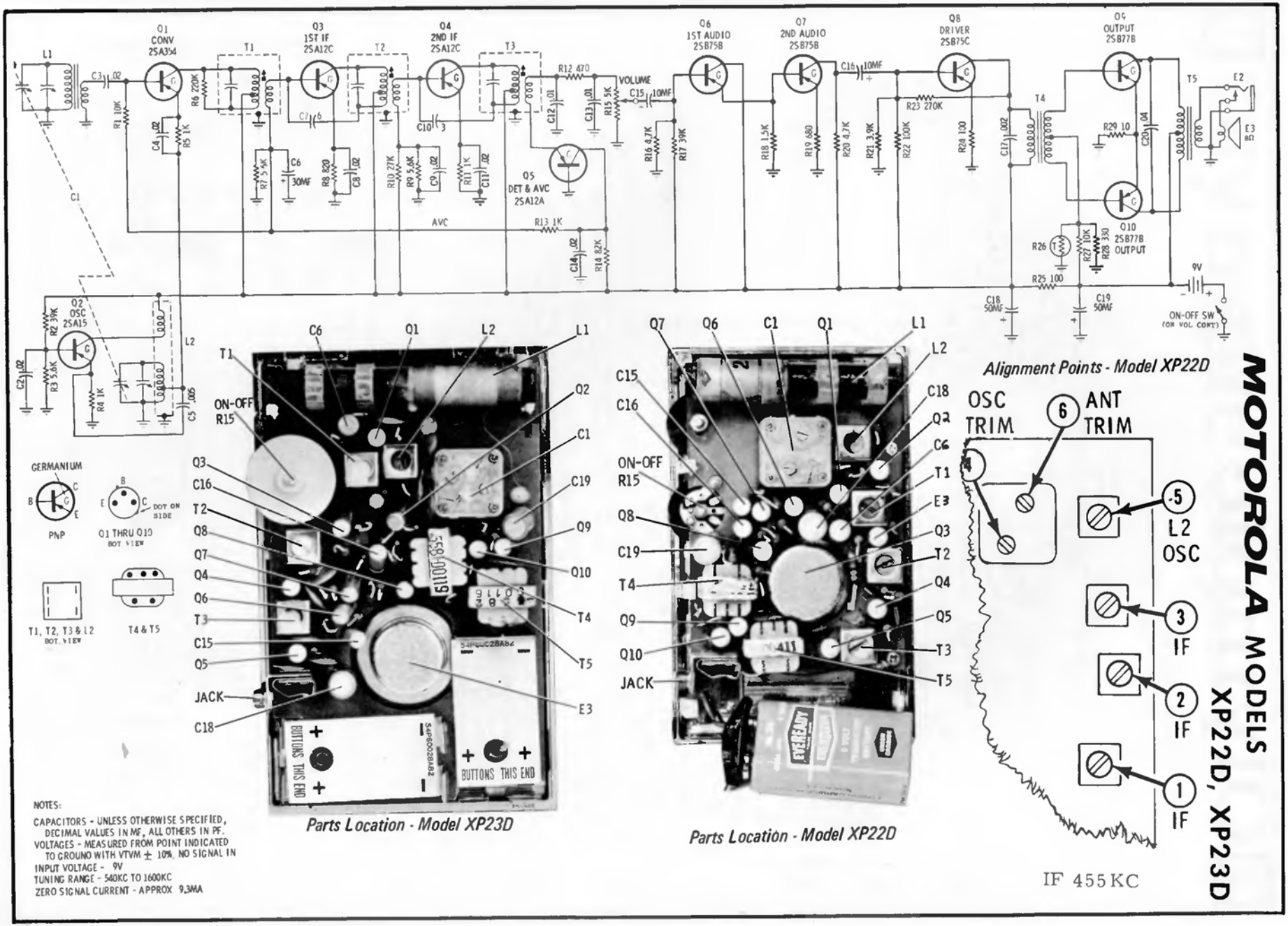

# Olympic

Models:
AFM 32, 33
CF 34, 35

AM IF 455 KC
FM IF 10.7 MC

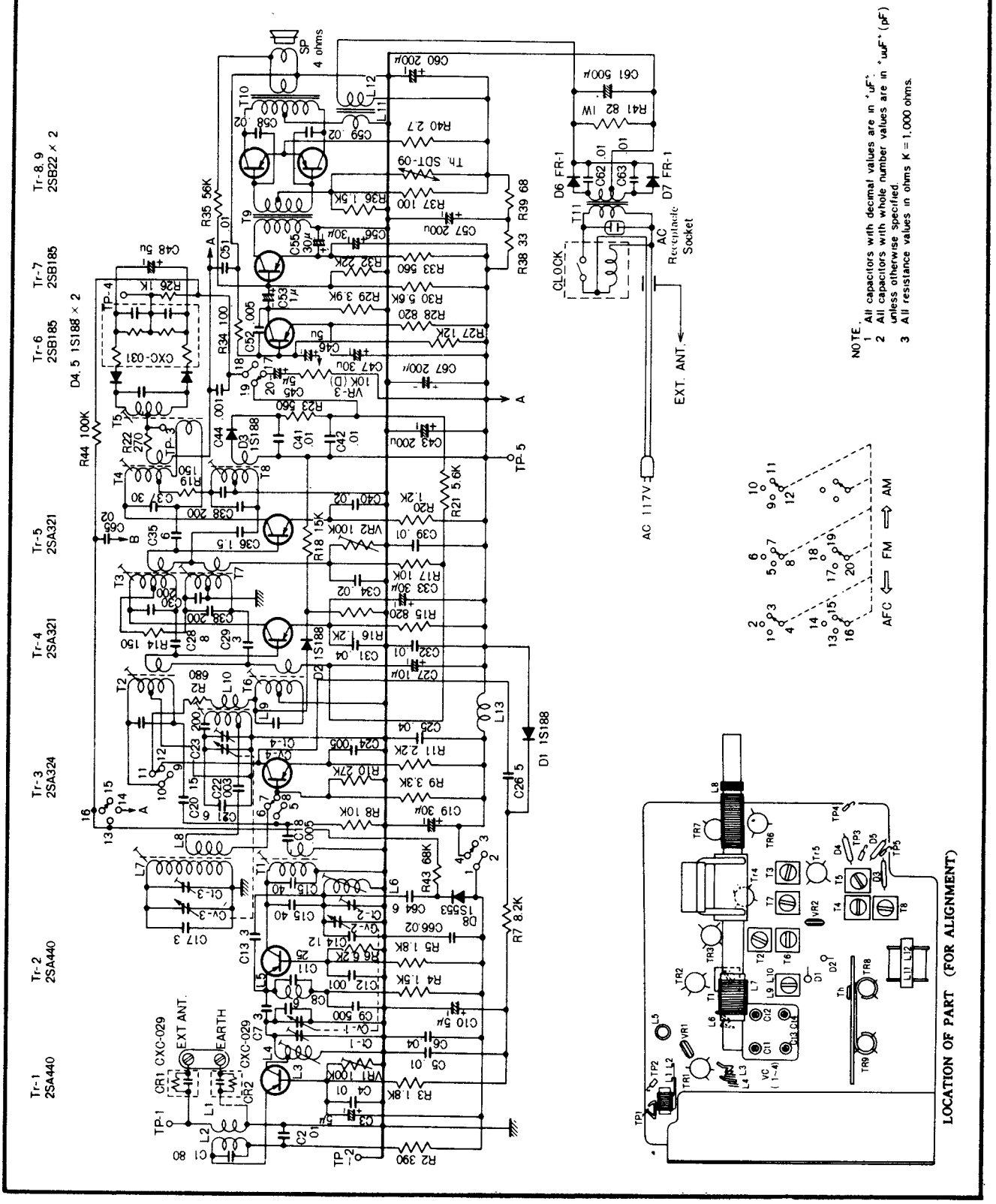

# Olympic MODEL AFM 26

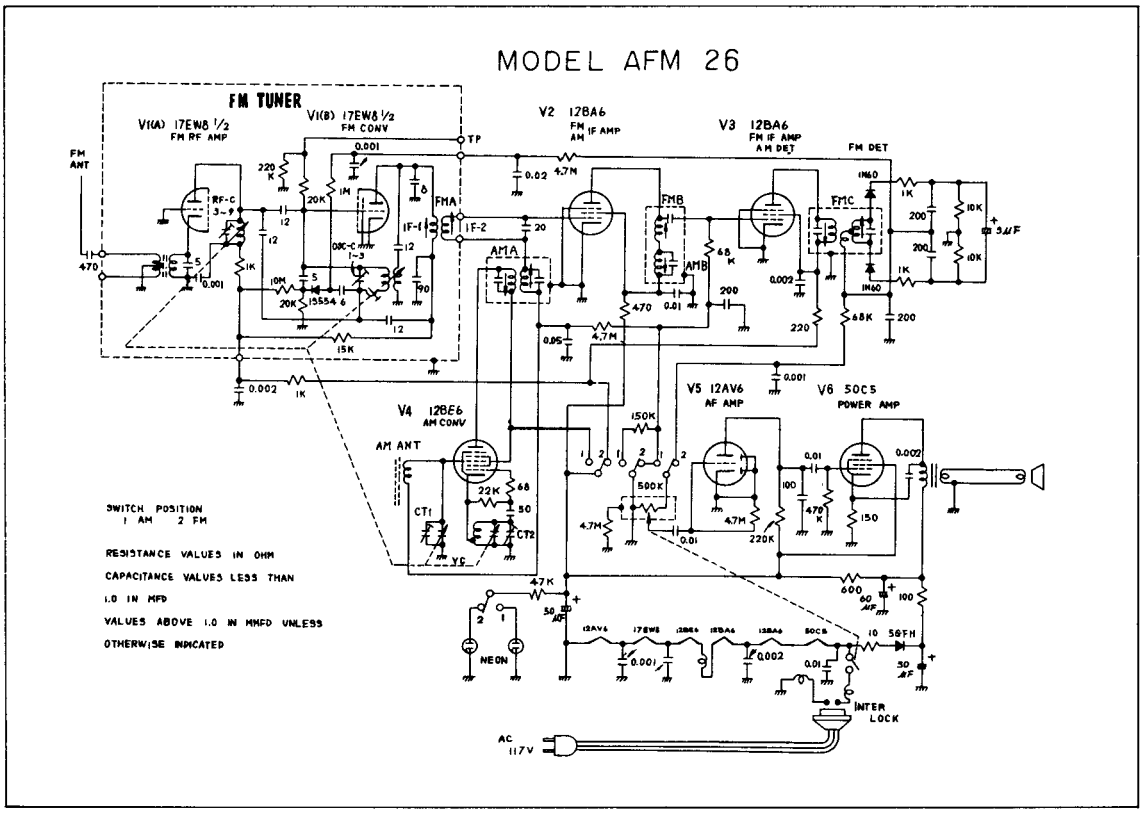


| | STEP. | Connect high side signal generator to | Set signal generator to | Turn pointer to | Read output on | Adjust the following (keep signal from signal generator as low as possible) |
|---|---|---|---|---|---|---|
| | Before aligning close variable cendenser fully counter-clockwise (plates fully closed) and adjust pointer to coincide with the beginning of dial scale | | | | | |
| AM | 1 | R F. Section of variable condenser or pin 7 of the 12BE6 | 455 KC | Extreme right hand position (condenser fully open) | Output meter across speaker voice-coil | AMA (Slug on top of chassis. Slug on underside of chassis for maximum reading) |
| | 2 | Tube in series with a 0.1 MFD., 400 volt condenser | | | | AMB (Slug on underside of chassis for maximum reading) |
| | 3 | Use radiated signal (connect both sides of signal generator to radiation loop) | 1400 KC | 1400 KC on dial | | CT2 (Oscillator trimmer for maximum output) |
| | 4 | | | | | CT1 (Antenna trimmer for maximum output) |
| | 5 | | 600 KC | 600 KC on dial | | Check that 600KC resonanec corresponds with 600KC point on dial |
| FM | 1 | R F. section of the "TP" on FM Tuner | 10.7 MC | Extreme right hand position (condenser fully open) | Connect oscilloscope across condenser (200MMFD) of FM DET maximum view of S curve | FMA (Slug on IF-1 of tuner. Slug on IF-2 of tuner for maximum) |
| | 2 | "TP" in series with a 0.1 MFD 1400 volt condenser | | | | FMB (Slug on top of chassis for maximum) |
| | 3 | | | | | FMC (Slug on top of chassis. Slug on underside of chassis for maximum reading) |
| | 4 | Connect high side signal generator to Antenna screw. | 108 MC | 108 MC | Output meter across speaker voice-coil | OSC-C (oscillator trimer for maximum output) |
| | 5 | | 98 MC | 98 MC | | RF-C (FM.RF. Amp trimmer for maximum output) |
| | 6 | | 90 MC | 90 MC | | Check that 90MC resonance corresponds with 90MC point on dial. |

NOTE: This Chassis is connected to one side of the power line. On AC operation an isolation transformer should be used to prevent shock hazard. To protect the signal generator, if no isolation transformer available or if the radio is operated on DC, connect a 0.1 $\mu$F capacitor between the high side of the signal generator and the radio. The output of the signal generator be no higher than necessary to obtain a usable output reading. Connect signal generator ground to chassis.

# Olympic

## MODEL SA 501

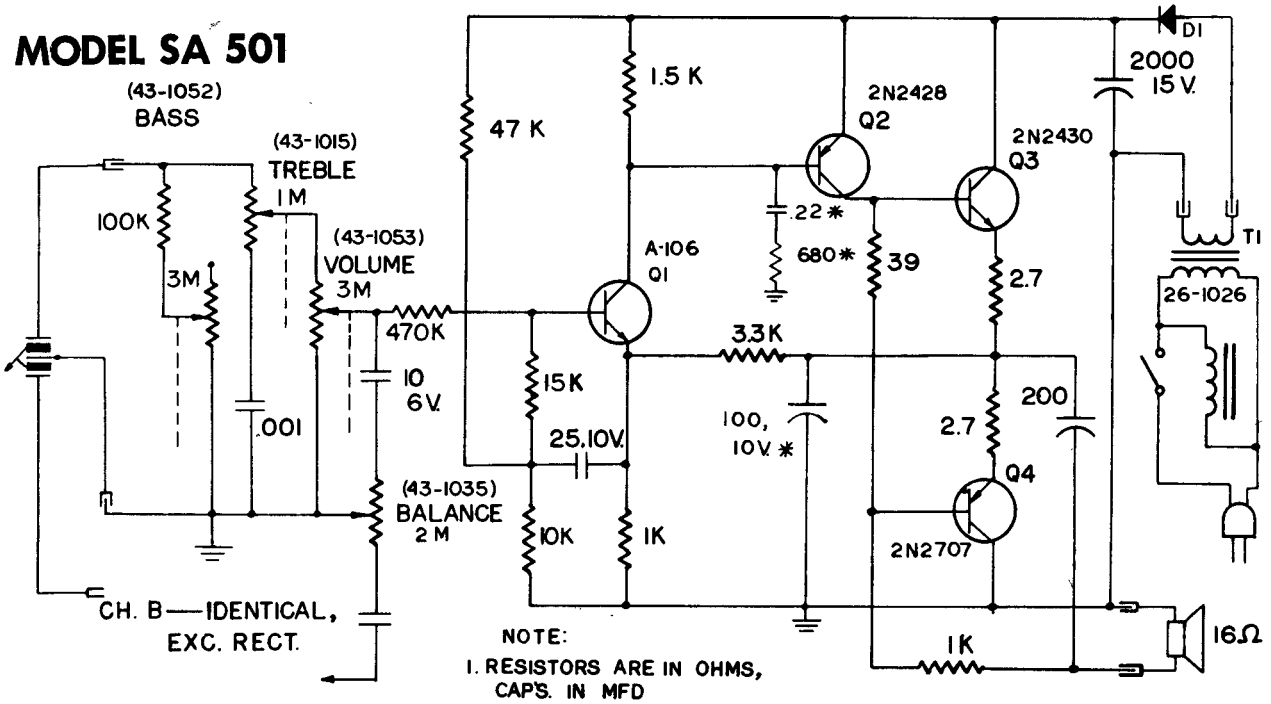


NOTE:
1. RESISTORS ARE IN OHMS, CAP'S. IN MFD
2. PARTS MARKED WITH * NOT PRESENT IN ALL MODELS.

## MODEL MA 100

NOTES
1. RESISTORS ARE IN OHMS, CAPACITORS IN MFD.
2. PART NO'S:
   Q1 - A1567-1, Q2 - 2N2430, Q3 - 2N2706,
   D1 - 48-1005, T1 - 26-1025, R1 - 43-1050,
   R2 - 43-1048

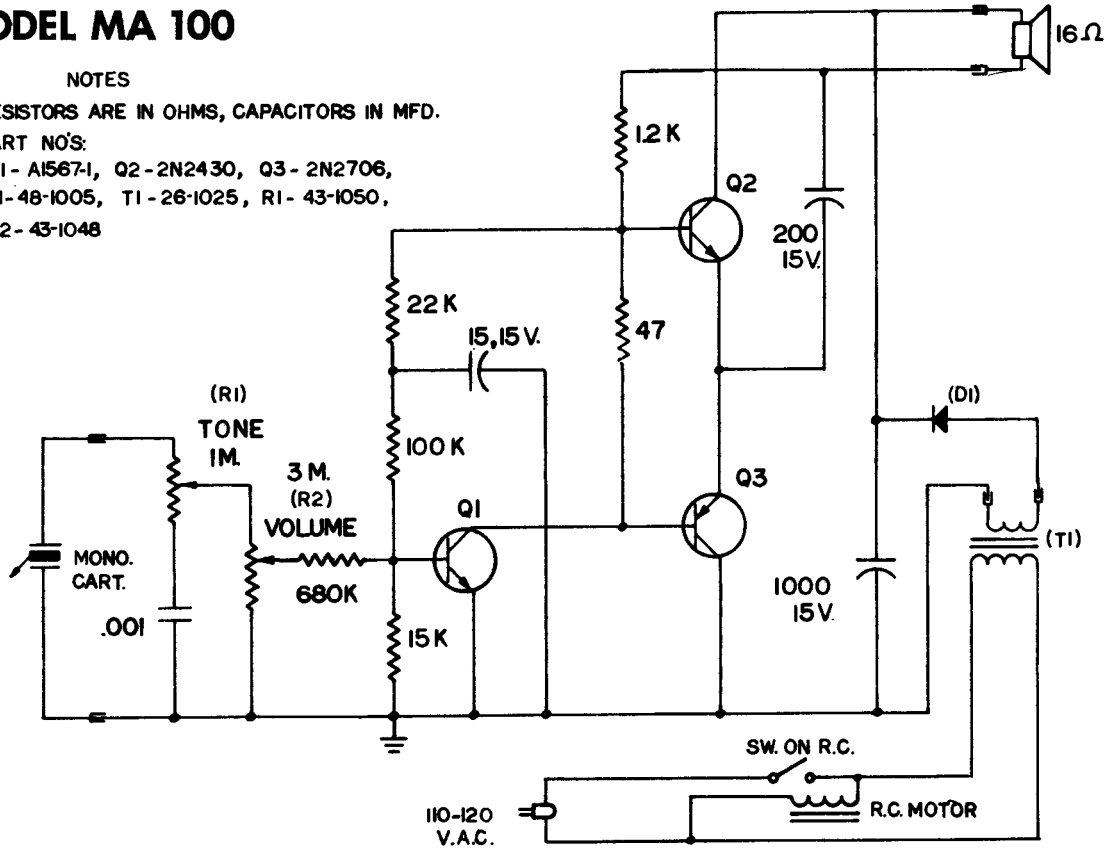

# PHILCO

MODEL P670TBE

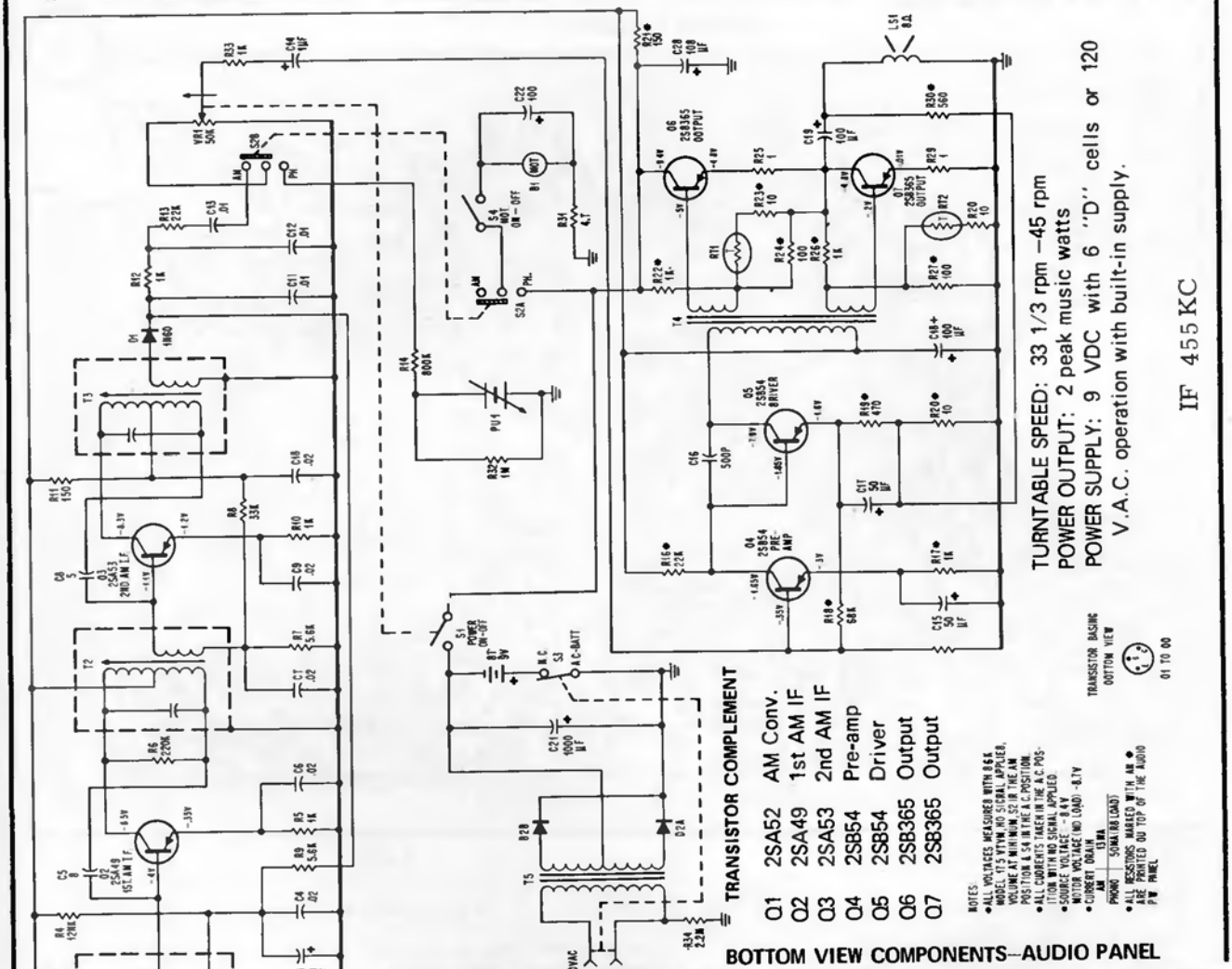


BOTTOM VIEW COMPONENTS—AUDIO PANEL

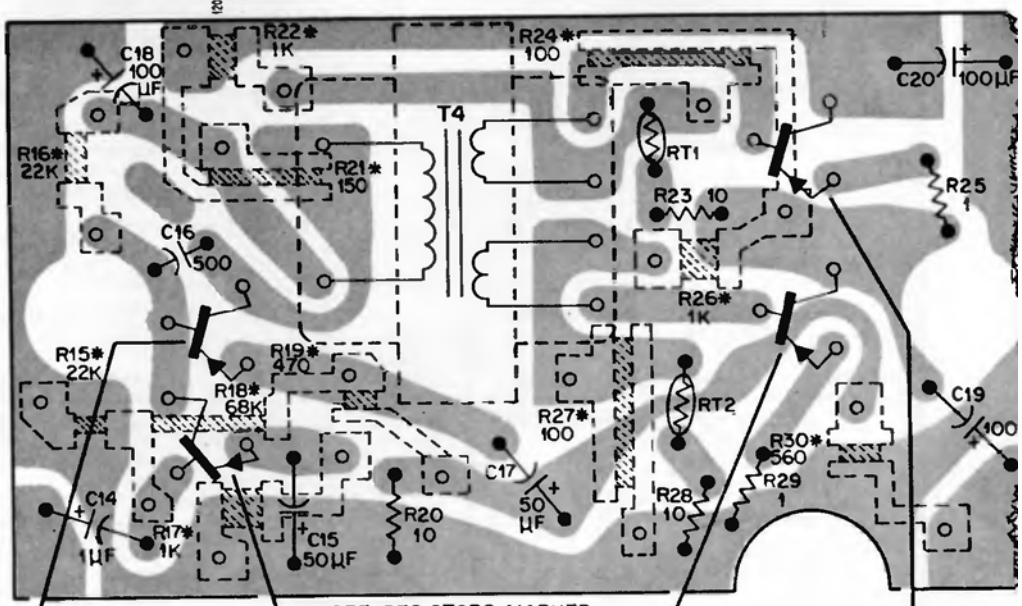


NOTE: RESISTORS MARKED WITH AN * ARE PRINTED ON TOP OF THE P.W. PANEL, REPLACE WITH CARBON TYPE.

Q5 2SB54 | Q4 2SB54 | Q7 2SB365 | Q6 2SB365

# PHILCO

## AM-FM TRANSISTOR RADIO MODELS S771WH, S772WH, S773CB, S774WA, S953WA & S980WH

(Continued on next page.)

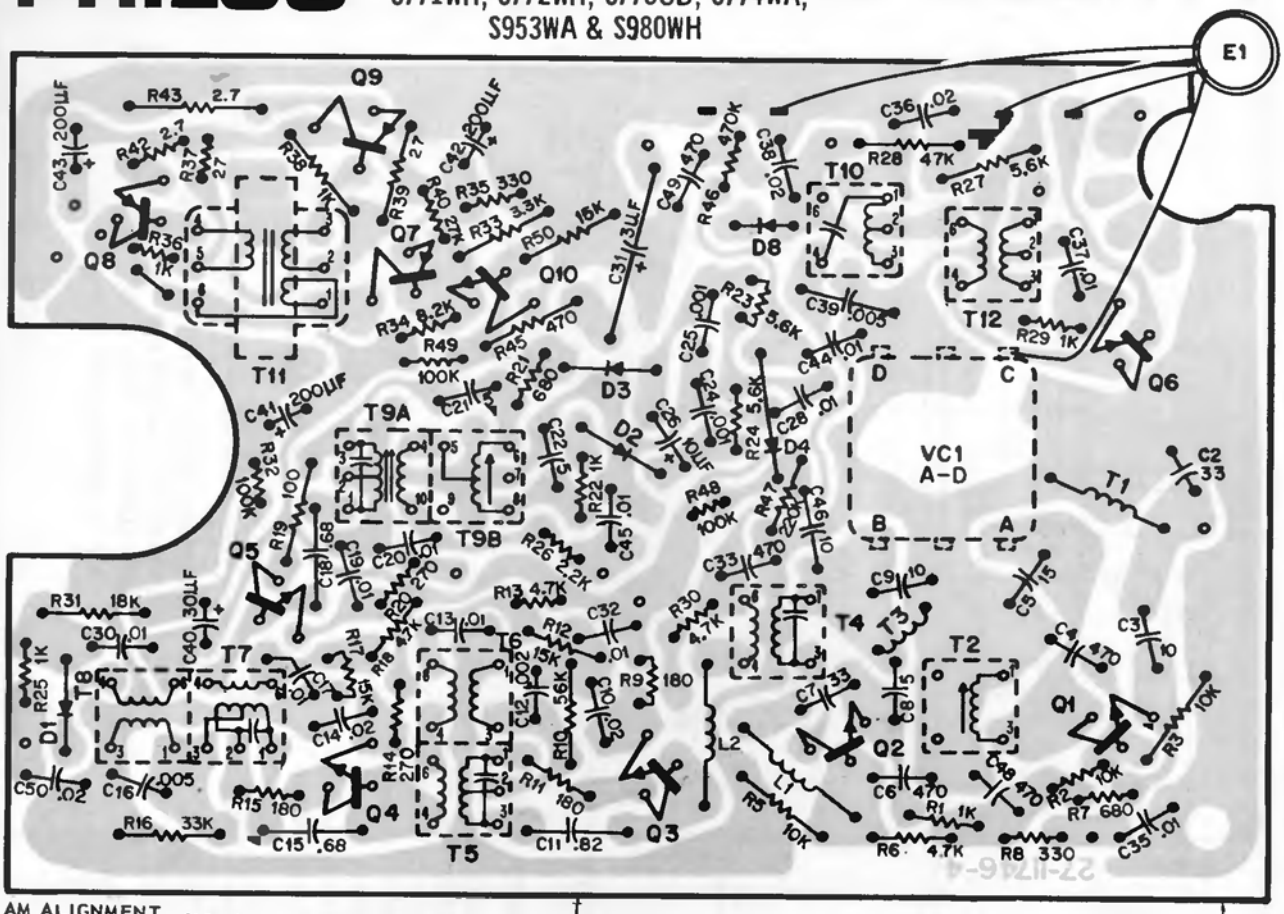


**AM ALIGNMENT**

| SIGNAL GENERATOR | | | RADIO | | |
|---|---|---|---|---|---|
| STEP | CONNECTION TO RADIO | DIAL SETTING | DIAL SETTING | SPECIAL INSTRUCTIONS | ADJUST |
| 1 | RADIATING LOOP (SEE NOTE 1) | 455 KHZ | TUNING GANG FULLY OPEN | ADJUST FOR MAX. OUTPUT IN ORDER GIVEN. | T8, T6 & T10 |
| 2 | SAME AS STEP 1 | 1650 KHZ | TUNING GANG FULLY OPEN | ADJUST FOR MAX. OUTPUT. | C1D AM OSC. |
| 3 | SAME AS STEP 1 | 1400 KHZ | 1400 KHZ | ADJUST FOR MAX. OUTPUT. | C1C ANT. TRIM. |
| 4 | SAME AS STEP 1 | 600 KHZ | 600 KHZ | ADJUST FOR MAX. OUTPUT. ROCK TUNING GANG DURING ADJUSTMENT. | T12 AM OSC. |
| 5 | REPEAT STEPS 2, 3 & 4 UNTIL NO FURTHER IMPROVEMENT IS OBTAINED. | | | | |

**FM ALIGNMENT**

| SIGNAL GENERATOR | | | RADIO | | |
|---|---|---|---|---|---|
| STEP | CONNECTION TO RADIO | DIAL SETTING | DIAL SETTING | SPECIAL INSTRUCTIONS | ADJUST |
| 1 | COLLECTOR OF Q1 THRU .01 MF CAPACITOR | 10.7 MHZ ±75 KHZ SWEEP | TUNING GANG FULLY OPEN | ADJUST FOR MAXIMUM OUTPUT IN ORDER GIVEN. REDUCE GENERATOR OUTPUT AS NECESS. | T9A, T7, T5 & T4 |
| 2 | SAME AS STEP 1 | 10.7 MHZ 30% AM | TUNING GANG FULLY OPEN | ADJUST FOR MINIMUM OUTPUT (A NULL BETWEEN TWO PEAKS) | T9B |
| 3 | REPEAT STEPS 1 AND 2 UNTIL NO FURTHER IMPROVEMENT IS OBTAINED. | | | | |
| 4 | CONNECT TO ANTENNA TERMINAL THRU 47 OHM RESISTOR | 87.5 MHZ ±75 KHZ | TUNING GANG FULLY CLOSED | ADJUST FOR MAX. OUTPUT. | T3 (SEE NOTE "A") FM OSC. |
| 5 | SAME AS STEP 4 | 108.5 MHZ ±75 KHZ | TUNING GANG FULLY OPEN | ADJUST FOR MAX. OUTPUT. | C1B FM OSC. |

(FM Alignment continued on next page.)

(FM Alignment continued.)

| | | | | | |
|---|---|---|---|---|---|
| 6 | REPEAT STEPS 4 AND 5 UNTIL NO FURTHER IMPROVEMENT IS OBTAINED. | | | | |
| 7 | SAME AS STEP 4 | 90 MHZ ±75 KHZ | 90 MHZ | ADJUST FOR MAX. OUTPUT. | T2 |
| 8 | SAME AS STEP 4 | 105 MHZ ±75 KHZ | 105 MHZ | ADJUST FOR MAX. OUTPUT. | C1A |
| 9 | REPEAT STEPS 7 AND 8 UNTIL NO FURTHER IMPROVEMENT IS OBTAINED. | | | | |

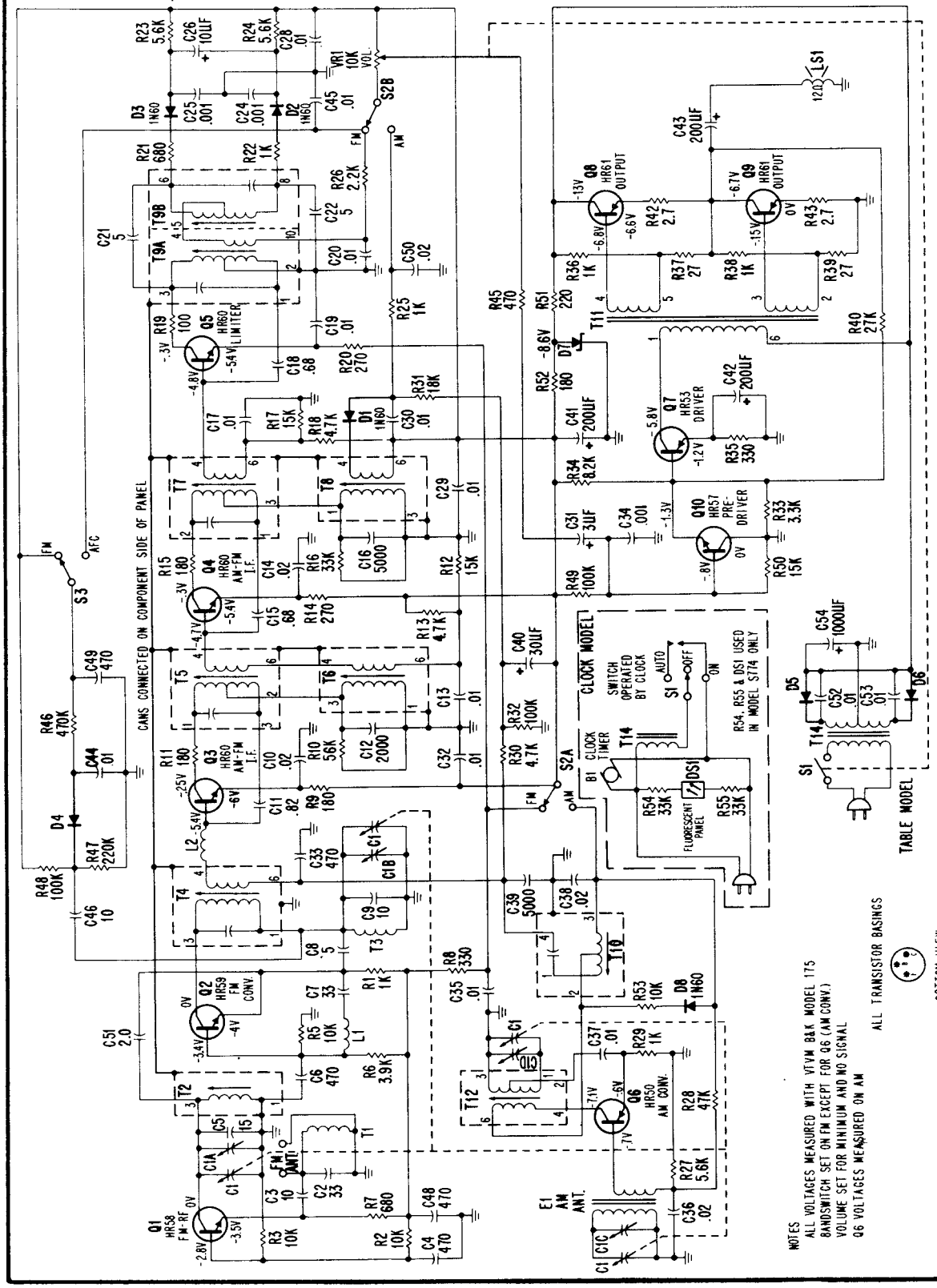


(Continued from preceding page.)

# PHILCO

## AM-FM TRANSISTOR PORTABLE RADIO MODEL ST-919

(Continued on next page.)

Bottom View Perma Circuit for Components—Model ST-919

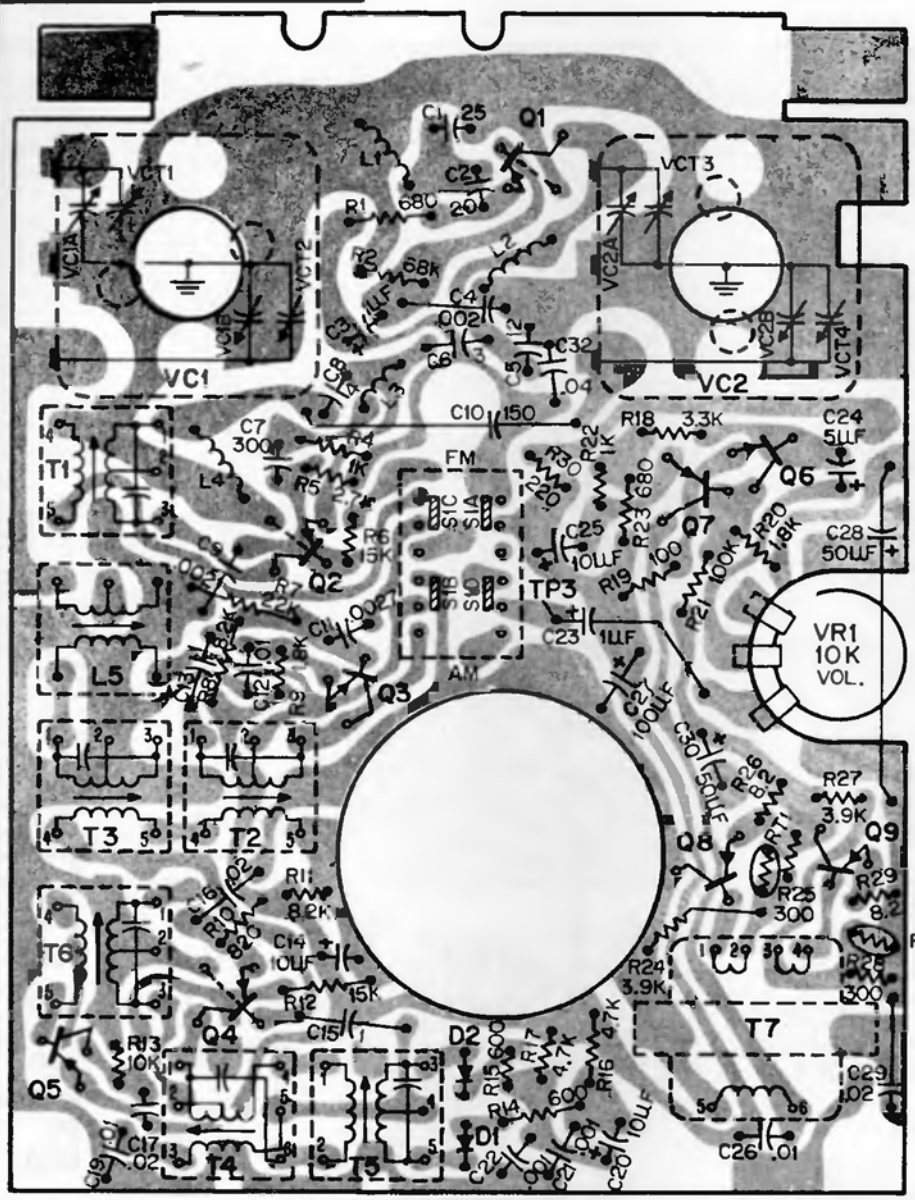


FM Alignment

| | SIGNAL GENERATOR | | RADIO | | |
|---|---|---|---|---|---|
| STEP | CONNECTION TO RADIO | DIAL SETTING | DIAL SETTING | SPECIAL INSTRUCTIONS | ADJUST |
| 1 | TP1 (RF INPUT) INPUT IMP. 75Ω | 10.7MHz ± 75KHZ SWEEP | TUNING GANG FULLY OPEN | ADJUST FOR MAX. OUTPUT AND BEST SYMMETERY IN ORDER GIVEN. | T1, T2, T4, T5 |
| 2 | SAME AS STEP 1 | 86MHZ 400HZ @ 75KHZ DEV. | TUNING GANG FULLY CLOSED | ADJUST FOR MAX. OUTPUT. | L4 |
| 3 | SAME AS STEP 1 | 110MHZ 400HZ @ | TUNING GANG FULLY OPEN | ADJUST FOR MAX. OUTPUT. | VCT4 |

AM ALIGNMENT

| | SIGNAL GENERATOR | | RADIO | | |
|---|---|---|---|---|---|
| STEP | CONNECTION TO RADIO | DIAL SETTING | DIAL SETTING | SPECIAL INSTRUCTIONS | ADJUST |
| 1 | TEST LOOP – LOOSE COUPLED | 455KHZ 400HZ @ 30% MOD. | TUNING GANG FULLY OPEN | ADJUST FOR MAX. OUTPUT IN ORDER GIVEN. | T3–1ST IF T6–2ND IF |
| 2 | SAME AS STEP 1 | 525KHZ 400HZ @ 30% MOD. | TUNING GANG FULLY CLOSED | ADJUST FOR MAX. OUTPUT. | L5–OSC. COIL |
| 3 | SAME AS STEP 1 | 1650KHZ 400HZ @ 30% MOD. | TUNING GANG FULLY OPEN | ADJUST FOR MAX. OUTPUT. | VCT2 |
| 4 | SAME AS STEP 1 | 600KHZ 400HZ @ 30% MOD. | 600KHZ | ADJUST FOR MAX. OUTPUT (MOVE COIL ON CORE) | E1–ANT. COIL |
| 5 | SAME AS STEP 1 | | 1400KHZ | ADJUST FOR MAX. OUTPUT | VCT1 |

FM Alignment continued

# PHILCO

## AM-FM TRANSISTOR PORTABLE RADIO MODEL ST-919

(Continued from preceding page.)

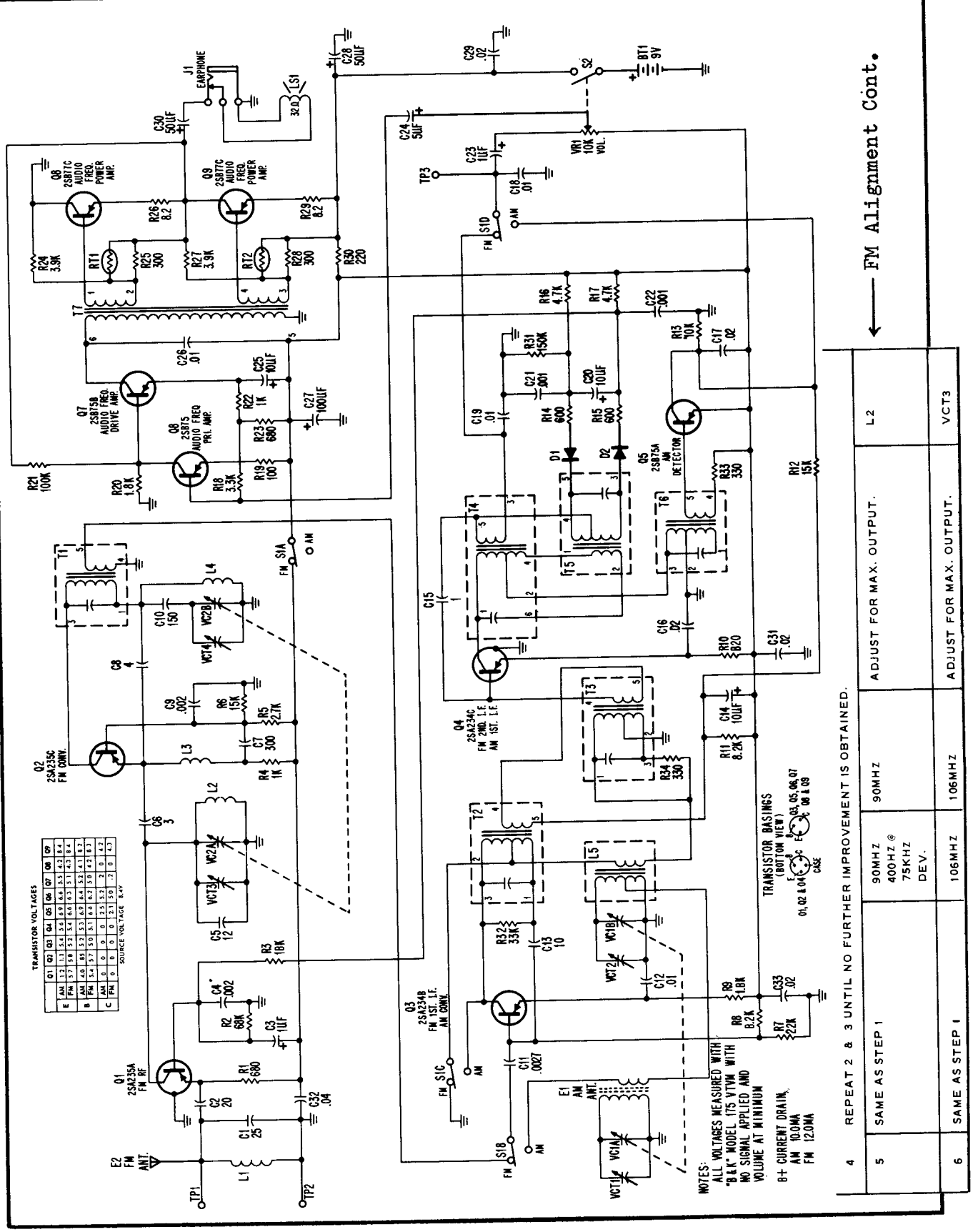

# PHILCO MODELS ST958 & ST959

(Continued on next two pages.)

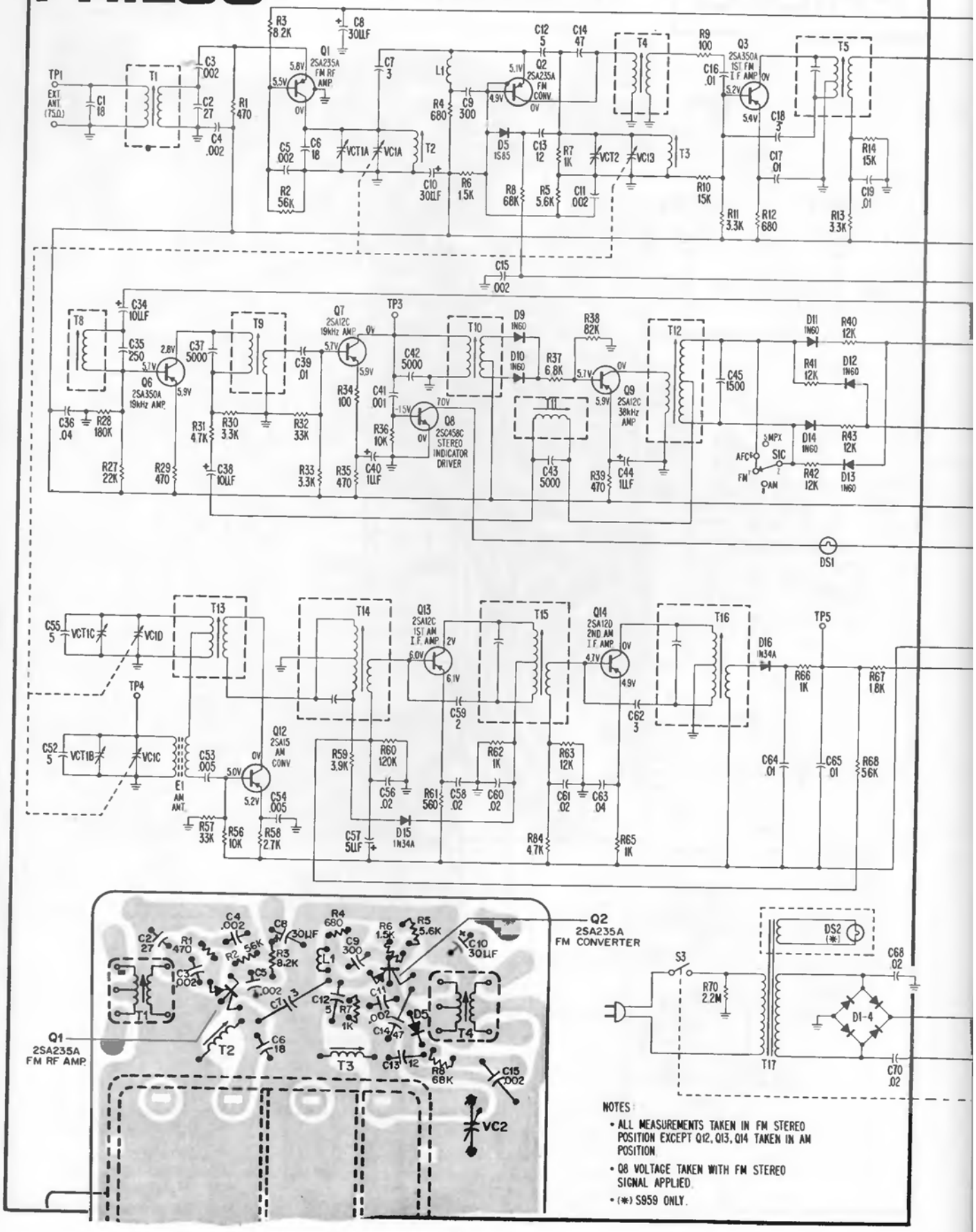


NOTES:

- ALL MEASUREMENTS TAKEN IN FM STEREO POSITION EXCEPT Q12, Q13, Q14 TAKEN IN AM POSITION.
- Q8 VOLTAGE TAKEN WITH FM STEREO SIGNAL APPLIED.
- (*) S959 ONLY.

Bottom View—FM Tuner—ST958 and ST959

(Continued on next page and from preceding page.)

# PHILCO

## MODELS ST958 & ST959

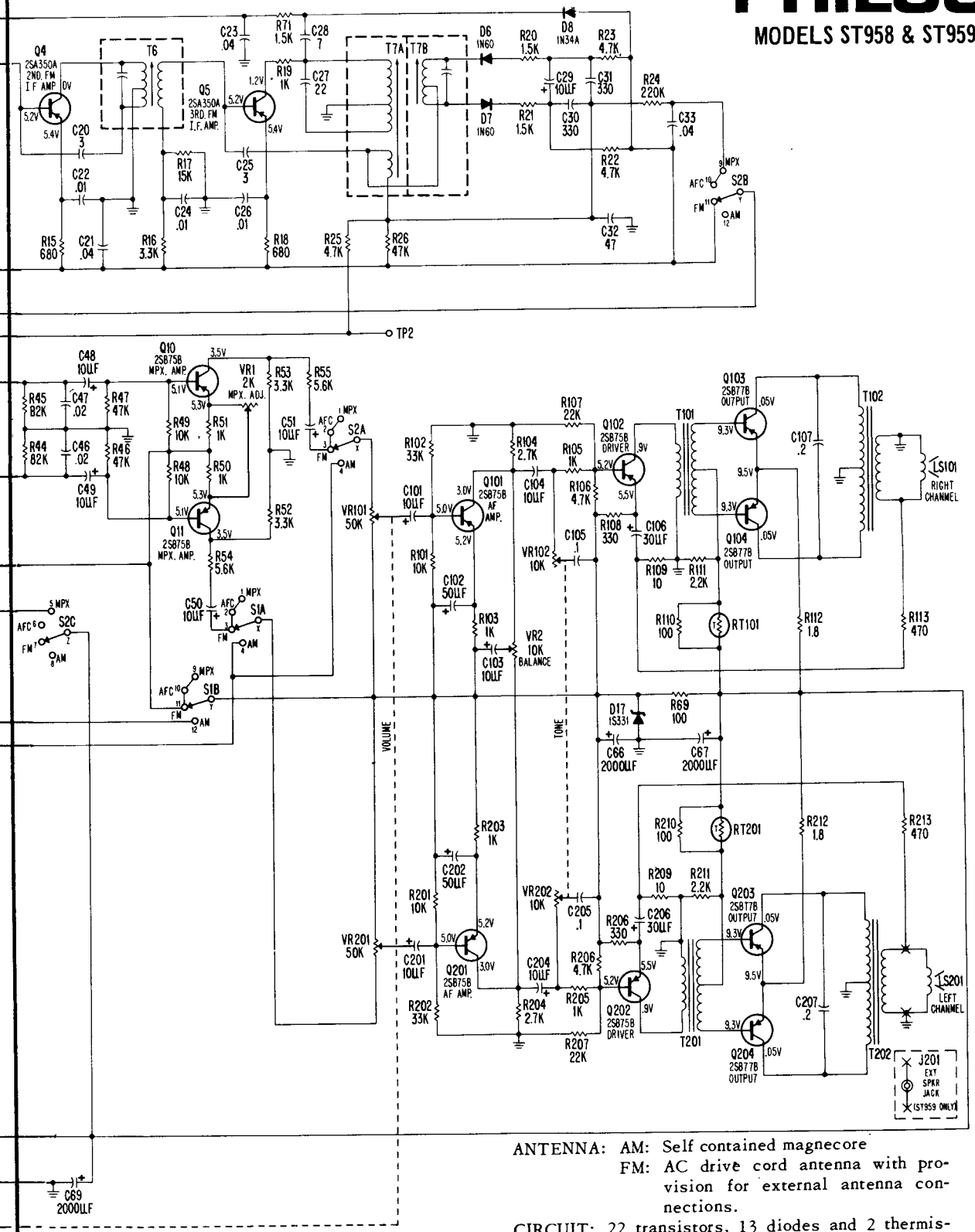


SPEAKERS:

ST958: Two 4'' round, 8 ohms, contained in cabinet.

ST959: Two 4 x 6, 8 ohms, one in cabinet, one extension speaker

POWER: 120 volts alternating current (AC) only.

ANTENNA: AM: Self contained magnecore

FM: AC drive cord antenna with provision for external antenna connections.

CIRCUIT: 22 transistors, 13 diodes and 2 thermistors in a superheterodyne FM-AM receiver.

FREQUENCY COVERAGE: FM-88MHz to 108MHz
AM-540MHz to 1620MHz
LW-150KHz to 350KHz

INTERMEDIATE FREQUENCY: AM - 455KHz
FM - 10.7MHz

# PHILCO Models ST958 & ST959

(Continued from preceding two pages.)

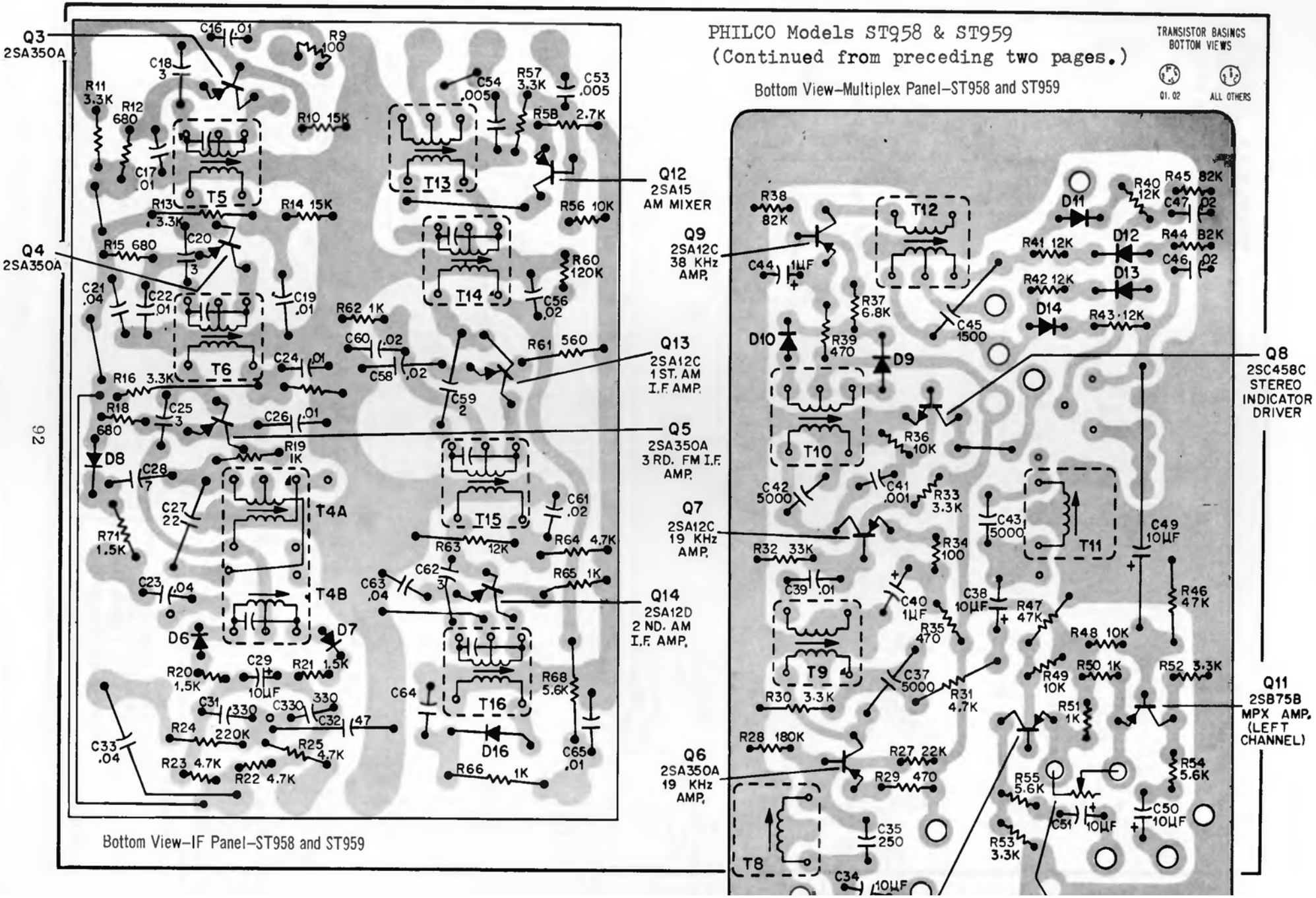

# PHILCO

## CLOCK/TABLE AM TRANSISTOR RADIO
## MODELS S521, S522, S759, S760, S761, S762, & S764

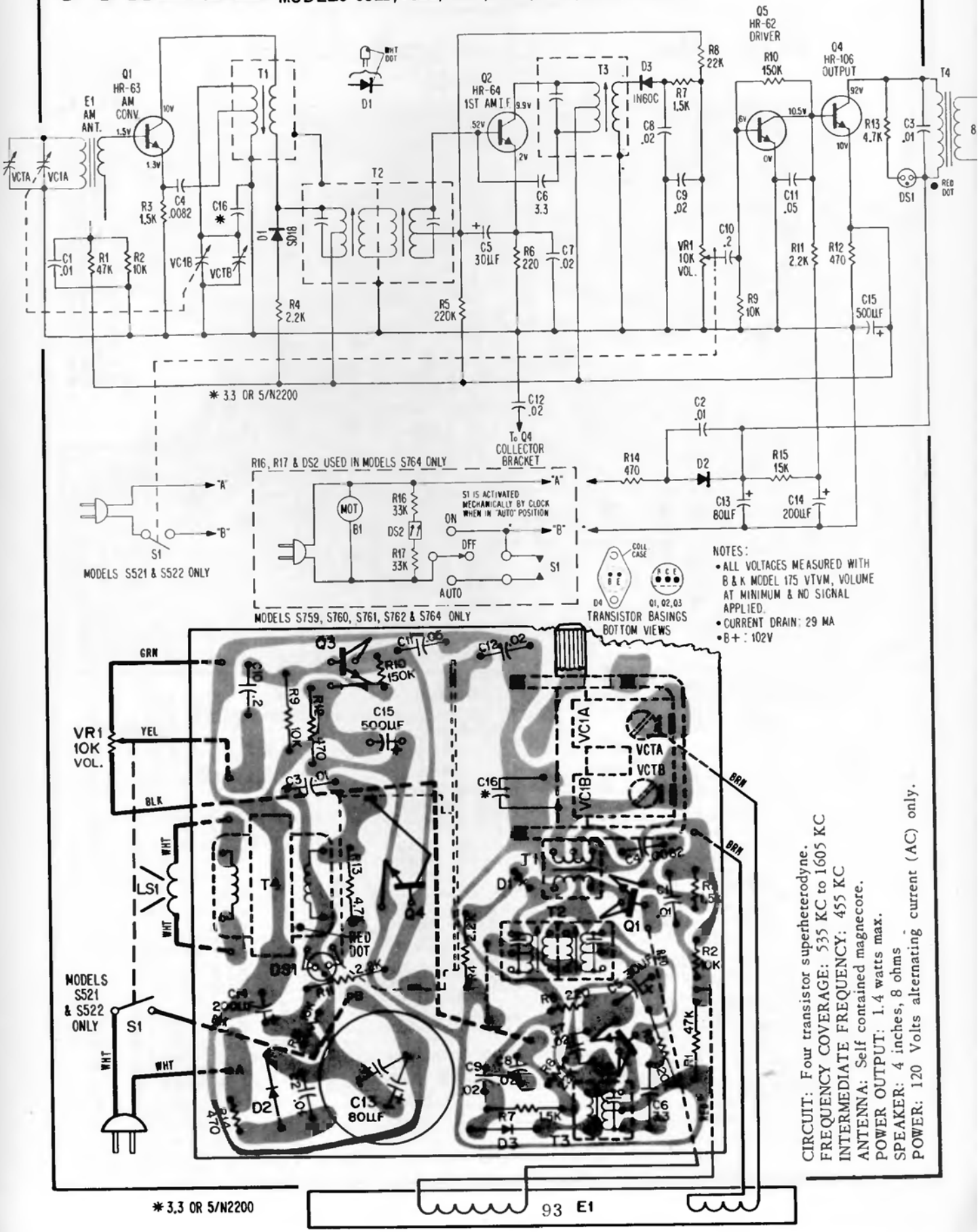


NOTES:
- ALL VOLTAGES MEASURED WITH B & K MODEL 175 VTVM, VOLUME AT MINIMUM & NO SIGNAL APPLIED.
- CURRENT DRAIN: 29 MA
- B+ : 102V

CIRCUIT: Four transistor superheterodyne.
FREQUENCY COVERAGE: 535 KC to 1605 KC
INTERMEDIATE FREQUENCY: 455 KC
ANTENNA: Self contained magnecore.
POWER OUTPUT: 1.4 watts max.
SPEAKER: 4 inches, 8 ohms
POWER: 120 Volts alternating current (AC) only.

# PHILCO MODEL ST984

(Continued on next page.)

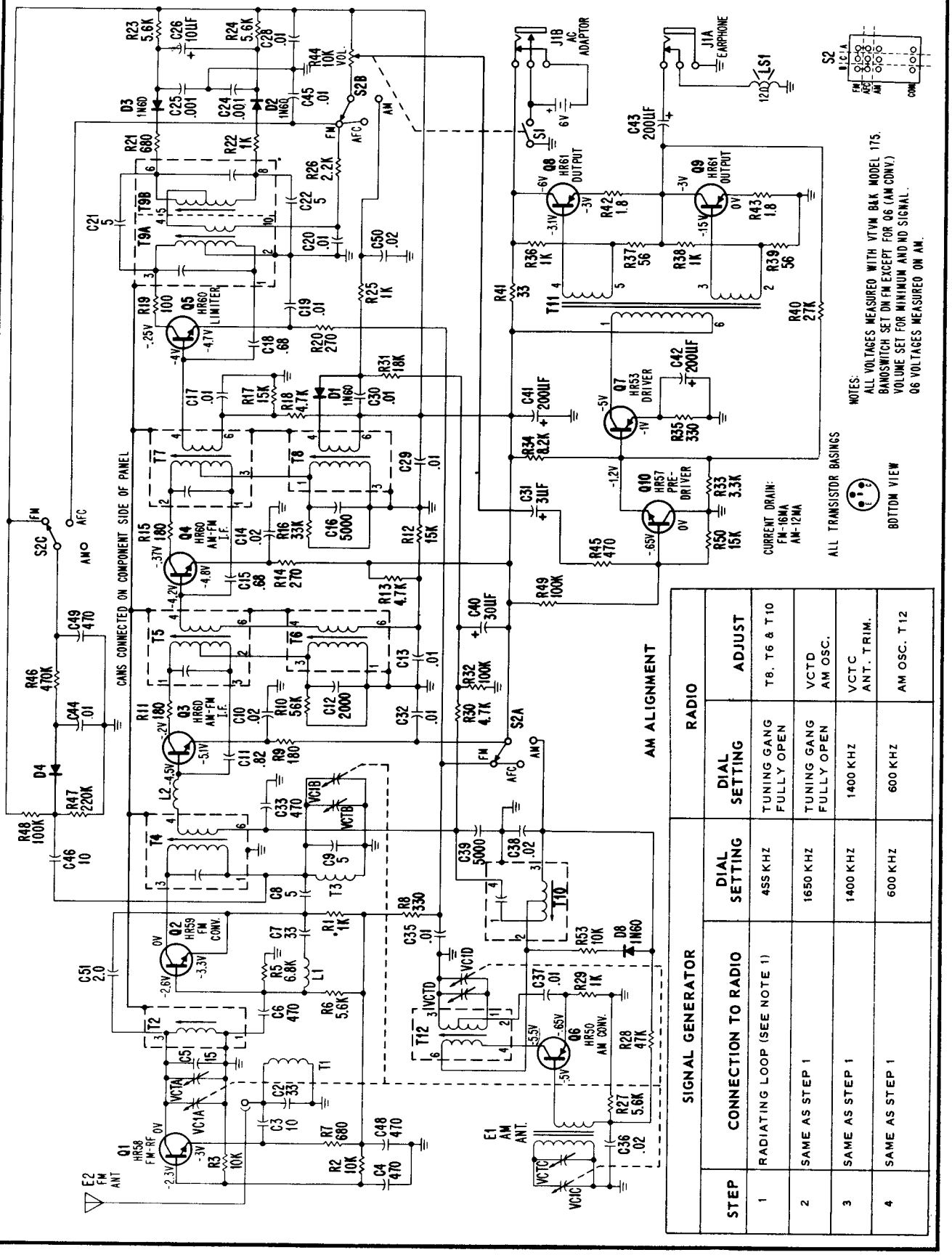


## AM ALIGNMENT

| SIGNAL GENERATOR | | | RADIO | |
|---|---|---|---|---|
| STEP | CONNECTION TO RADIO | DIAL SETTING | DIAL SETTING | ADJUST |
| 1 | RADIATING LOOP (SEE NOTE 1) | 455 KHZ | TUNING GANG FULLY OPEN | T8, T6 & T10 |
| 2 | SAME AS STEP 1 | 1650 KHZ | TUNING GANG FULLY OPEN | VCTD AM OSC. |
| 3 | SAME AS STEP 1 | 1400 KHZ | 1400 KHZ | VCTC ANT. TRIM. |
| 4 | SAME AS STEP 1 | 600 KHZ | 600 KHZ | AM OSC. T12 |

 (Continued from preceding page.)

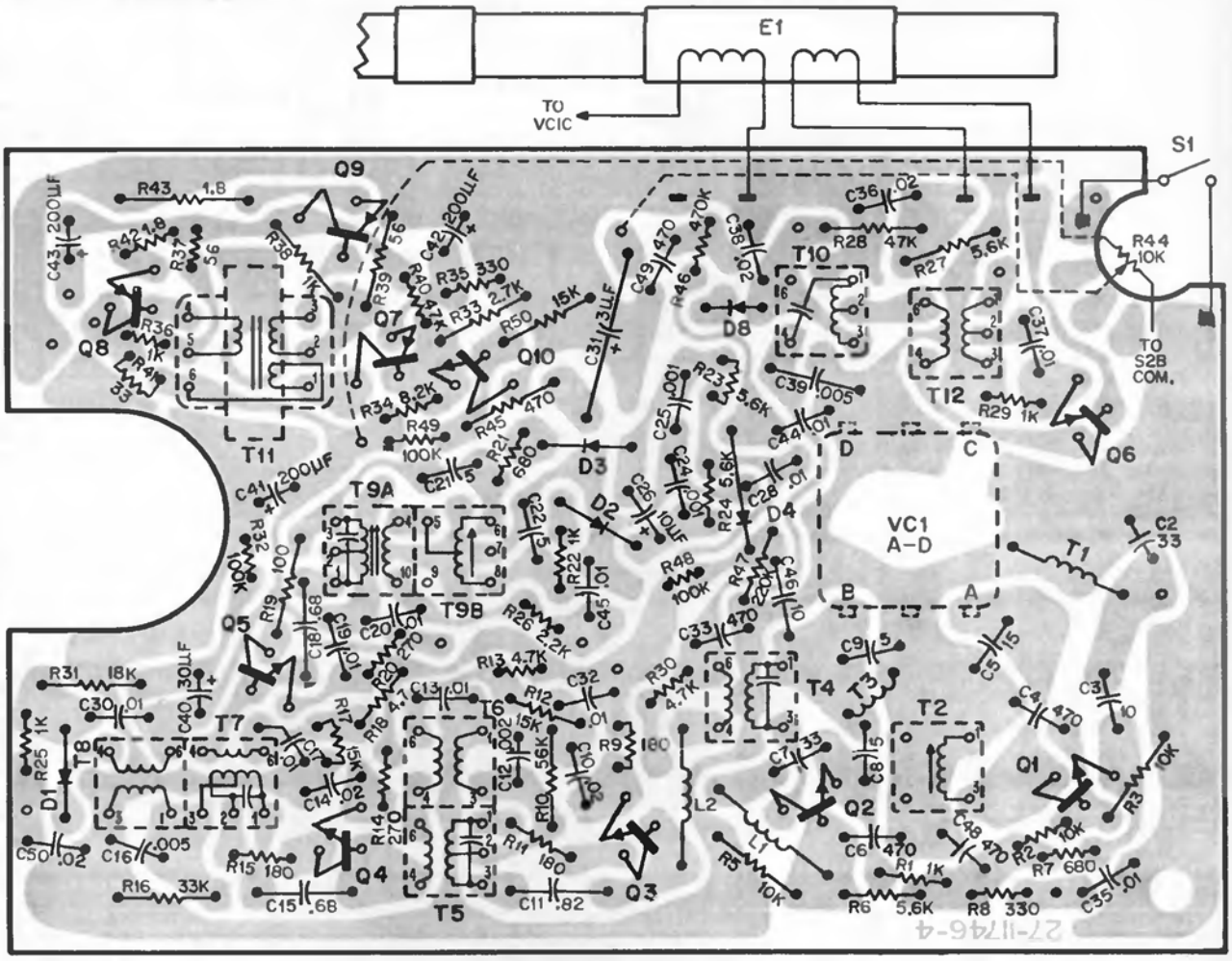


Bottom View–Perma Circuit Panel Component Layout–Model ST984

INTERMEDIATE FREQUENCY: AM, 455 KHz
FM, 10.7 MHz

**FM ALIGNMENT**

| SIGNAL GENERATOR | | | RADIO | | |
|---|---|---|---|---|---|
| STEP | CONNECTION TO RADIO | DIAL SETTING | DIAL SETTING | SPECIAL INSTRUCTIONS | ADJUST |
| 1 | COLLECTOR OF Q1 THRU .01 MF CAPACITOR | 10.7 MHZ ±75 KHZ SWEEP | TUNING GANG FULLY OPEN | ADJUST FOR MAXIMUM OUTPUT IN ORDER GIVEN. REDUCE GENERATOR OUTPUT AS NECESS. | T9A, T7, T5 & T4 |
| 2 | SAME AS STEP 1 | 10.7 MHZ 30% AM | TUNING GANG FULLY OPEN | ADJUST FOR MINIMUM OUTPUT (A NULL BETWEEN TWO PEAKS) | T9B |
| 3 | REPEAT STEPS 1 AND 2 UNTIL NO FURTHER IMPROVEMENT IS OBTAINED. | | | | |
| 4 | CONNECT TO ANTENNA TERMINAL THRU 47 OHM RESISTOR | 87.5 MHZ ±75 KHZ | TUNING GANG FULLY CLOSED | ADJUST FOR MAX. OUTPUT. | T3 (SEE NOTE "A") FM OSC. |
| 5 | SAME AS STEP 4 | 108.5 MHZ ±75 KHZ | TUNING GANG FULLY OPEN | ADJUST FOR MAX. OUTPUT. | VCTB FC OSC. |
| 6 | REPEAT STEPS 4 AND 5 UNTIL NO FURTHER IMPROVEMENT IS OBTAINED. | | | | |
| 7 | SAME AS STEP 4 | 90 MHZ ±75 KHZ | 90 MHZ | ADJUST FOR MAX. OUTPUT. | T2 |
| 8 | SAME AS STEP 4 | 105 MHZ ±75 KHZ | 105 MHZ | ADJUST FOR MAX. OUTPUT. | VCTA |
| 9 | REPEAT STEPS 7 AND 8 UNTIL NO FURTHER IMPROVEMENT IS OBTAINED. | | | | |

(Continued on next page.)

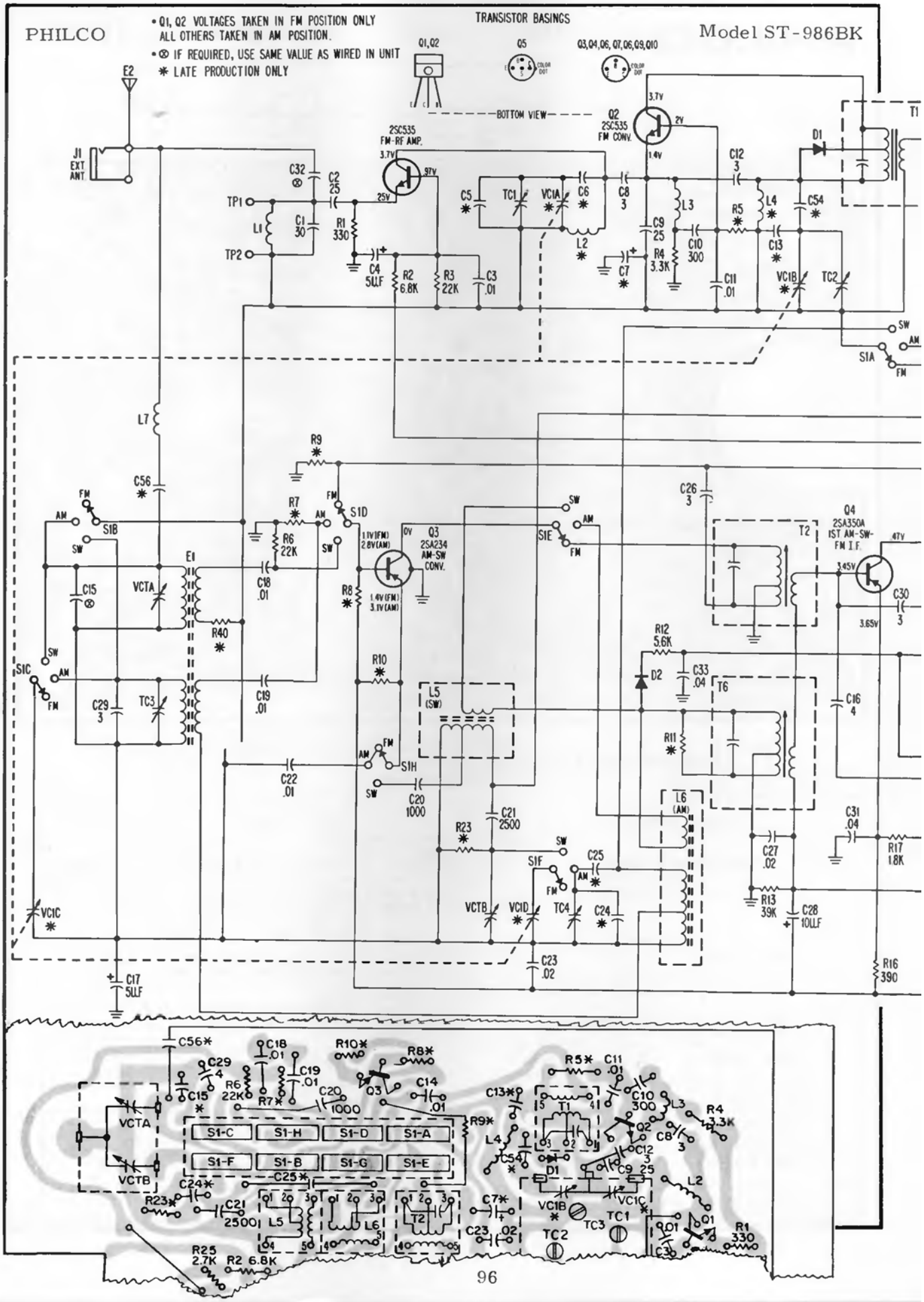

# PHILCO MODEL ST-986BK (Continued from preceding page.)

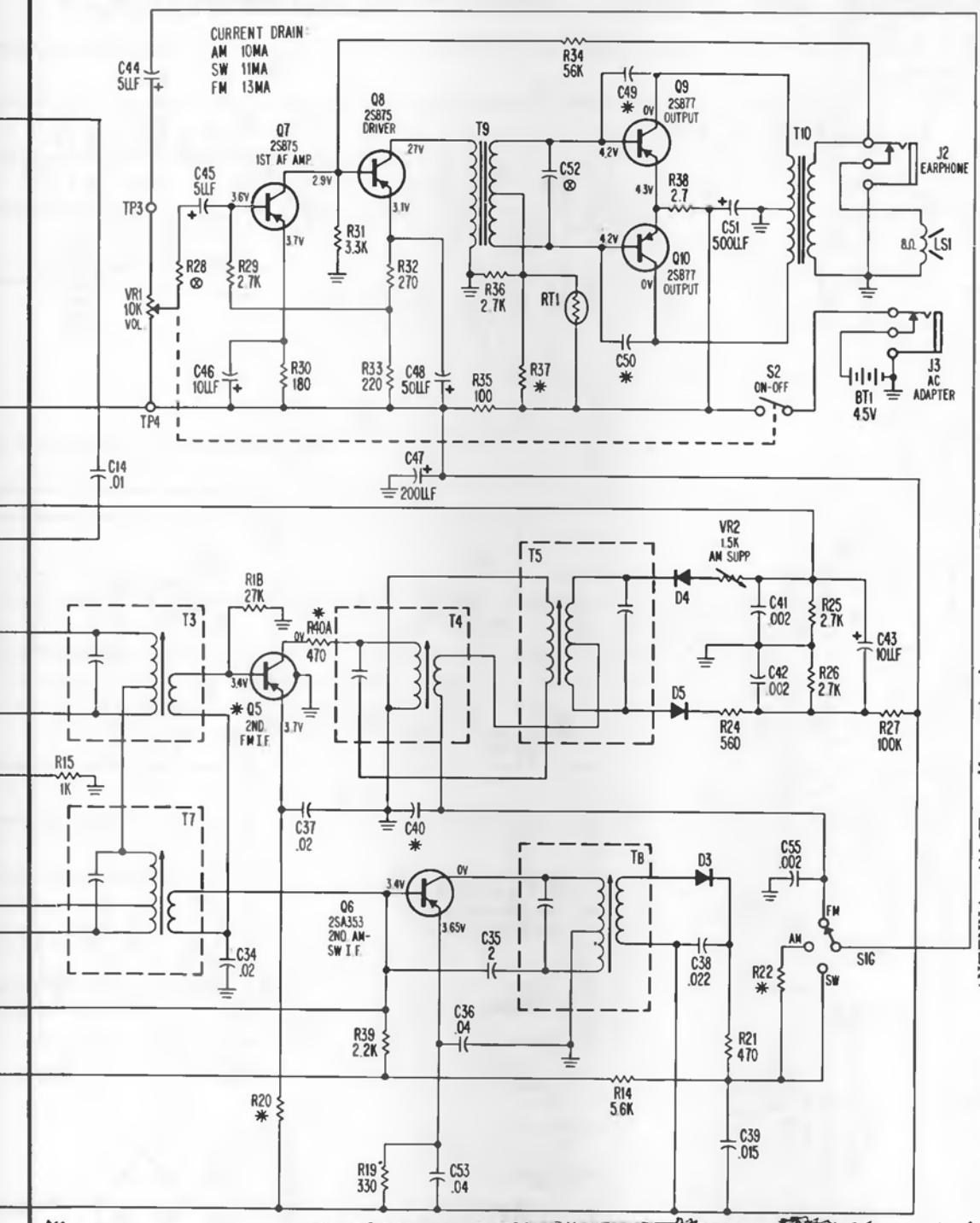


CIRCUIT: 10 transistors, 5 diodes and 1 thermistor in a superheterodyne FM-AM-SW receiver covering 3 bands.

SPEAKER: 3½ inch 8 ohms voice coil, jack provided for optional private listening unit (Part number 429-0919-19).

ANTENNA: AM-SW, self-contained magnecore. FM-SW, telescopic adjustable monopole. External antenna jack provided for use with an antenna other than the monopole.

BATTERY: 3 "D" cells provide a 4.5-volt supply with a jack provided for optional external power supply (Philco part no. 423-1009-4).

FREQUENCY RANGE: FM, 88MHz to 108MHz
SW, 4.5MHz to 12MHz
AM, 540KHz to 1600KHz

INTERMEDIATE FREQUENCY: FM, 10.7MHz
SW, 460KHz
AM, 460KHz

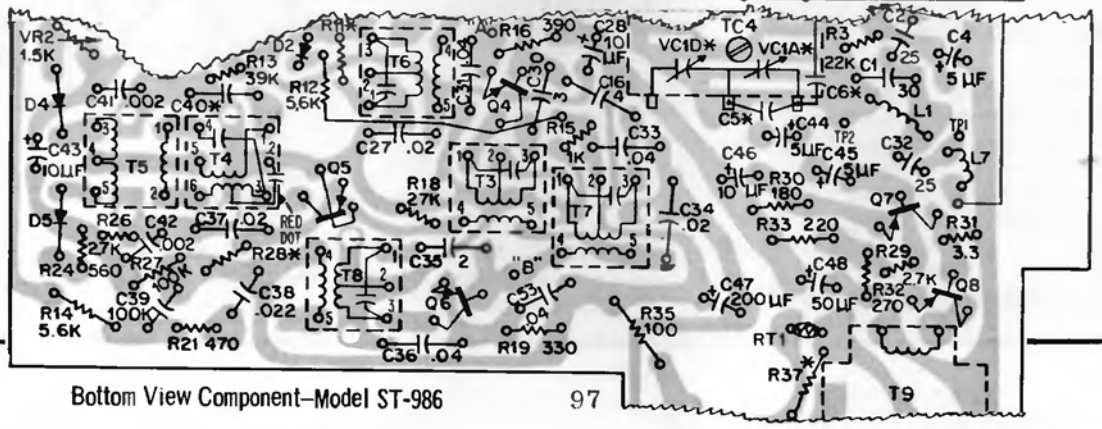


Bottom View Component—Model ST-986

# PHILCO MODEL ST-988BK

(Continued on next page.)

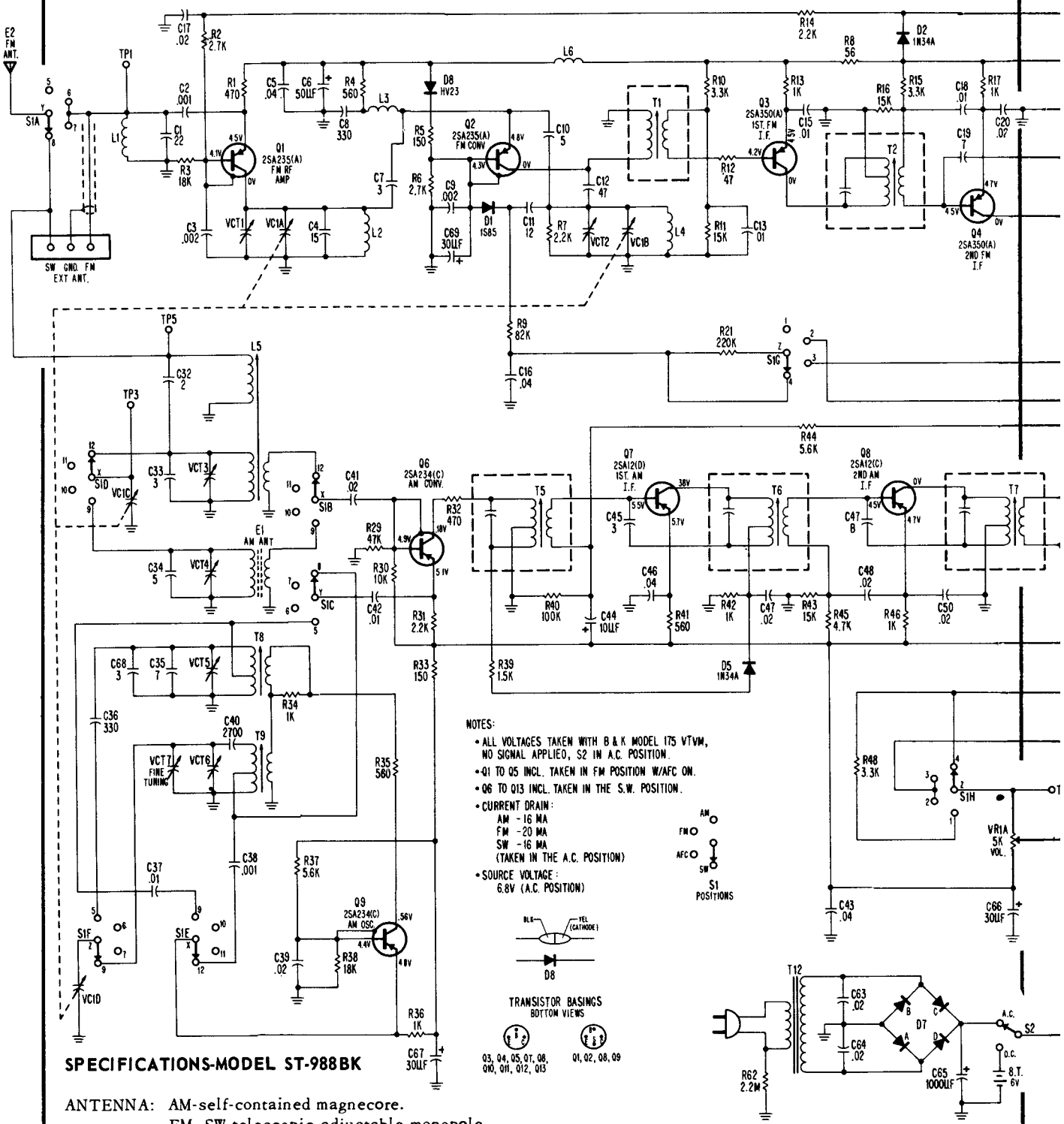


## SPECIFICATIONS-MODEL ST-988BK

ANTENNA: AM-self-contained magnecore.
FM, SW-telescopic adjustable monopole.
Terminal panel provided for FM and SW antennas.

CIRCUIT: 13 transistors, 8 diodes and 1 thermistor in a superheterodyne FM-AM-SW receiver.

FREQUENCY COVERAGE: FM-88MHz to 108MHz
AM-540KHz to 1620KHz
SW-6MHz to 18MHz

INTERMEDIATE FREQUENCY: AM-455KHz
FM-10.7MHz

POWER SUPPLY: 4 "C" cells in a 6 volt supply with a built-in A.C. power supply for optional A.C. operation.

SPEAKER: 4 inches, 8 ohms, jack provided for optional private listening unit (Philco Part No. 326-8007-1).

# PHILCO MODEL ST-988BK

(Continued from preceding page.)

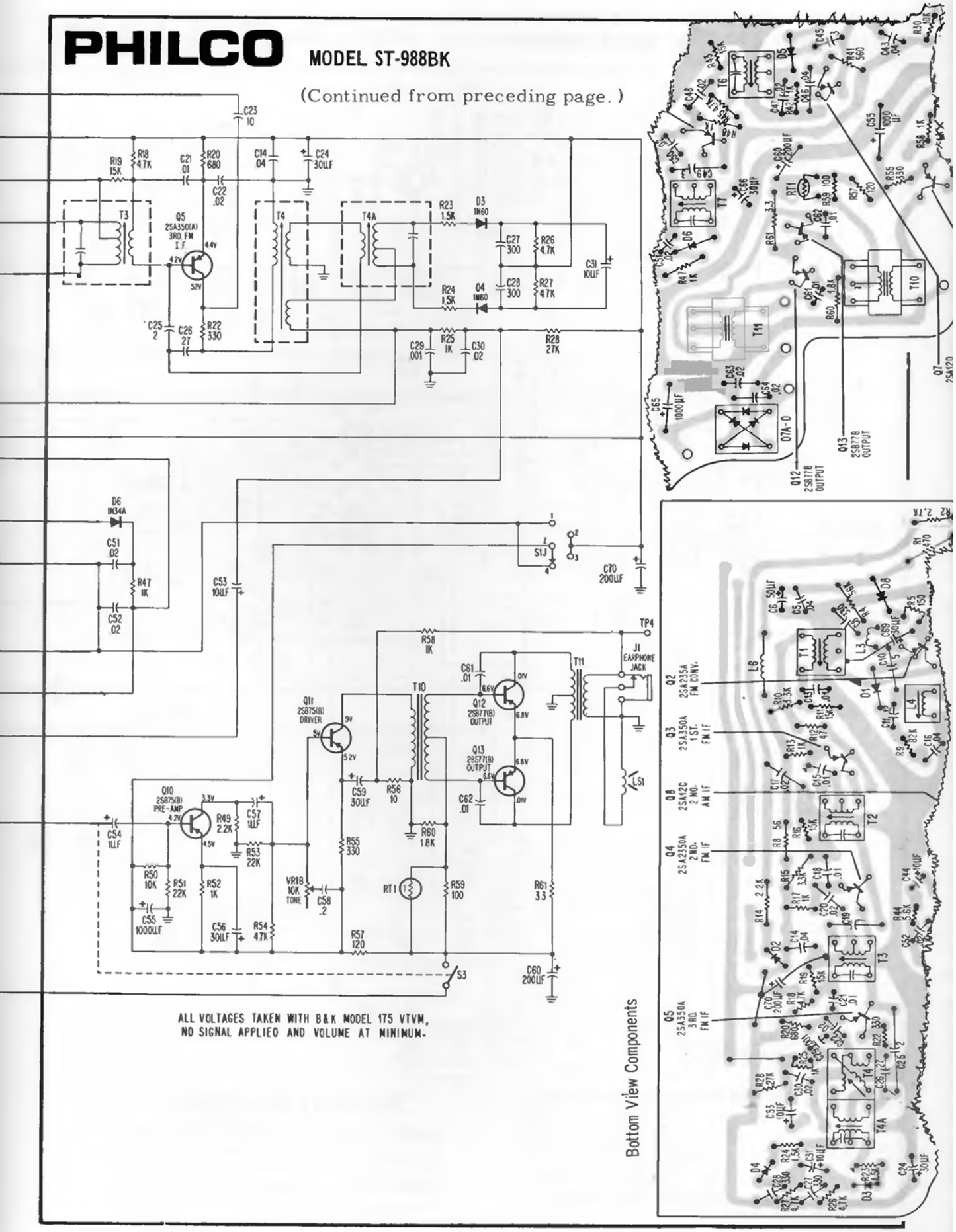


ALL VOLTAGES TAKEN WITH B&K MODEL 175 VTVM, NO SIGNAL APPLIED AND VOLUME AT MINIMUM.

# PHILCO MODEL ST989BK

(Continued on next two pages.)

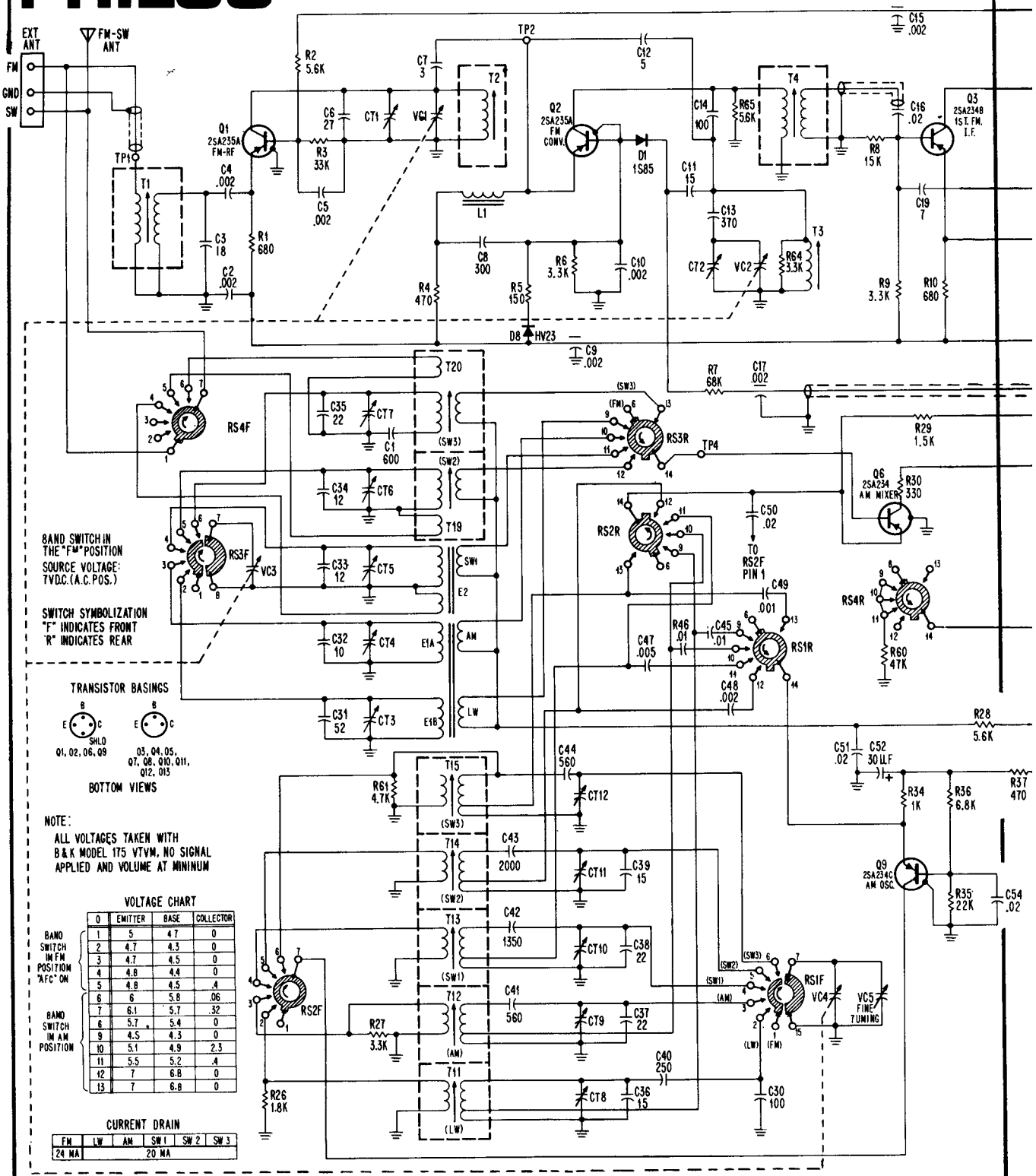


FREQUENCY COVERAGE: FM-88MHz to 108MHz
AM-540KHz to 1620KHz
LW-150KHz to 350KHz
SW1-1.5MHz to 4.5MHz
SW2-3MHz to 9MHz
SW3-9MHz to 22MHz

INTERMEDIATE FREQUENCY: AM - 455KHz
FM - 10.7MHz

## DISASSEMBLY INSTRUCTIONS

1. Remove 2 cross-recess screws from the rear of the cabinet and unsnap the battery compartment lid.
2. Carefully pull the line cord box out of the unit. Also remove the battery case.

# PHILCO MODEL ST989BK

Continued on next page and from preceding page

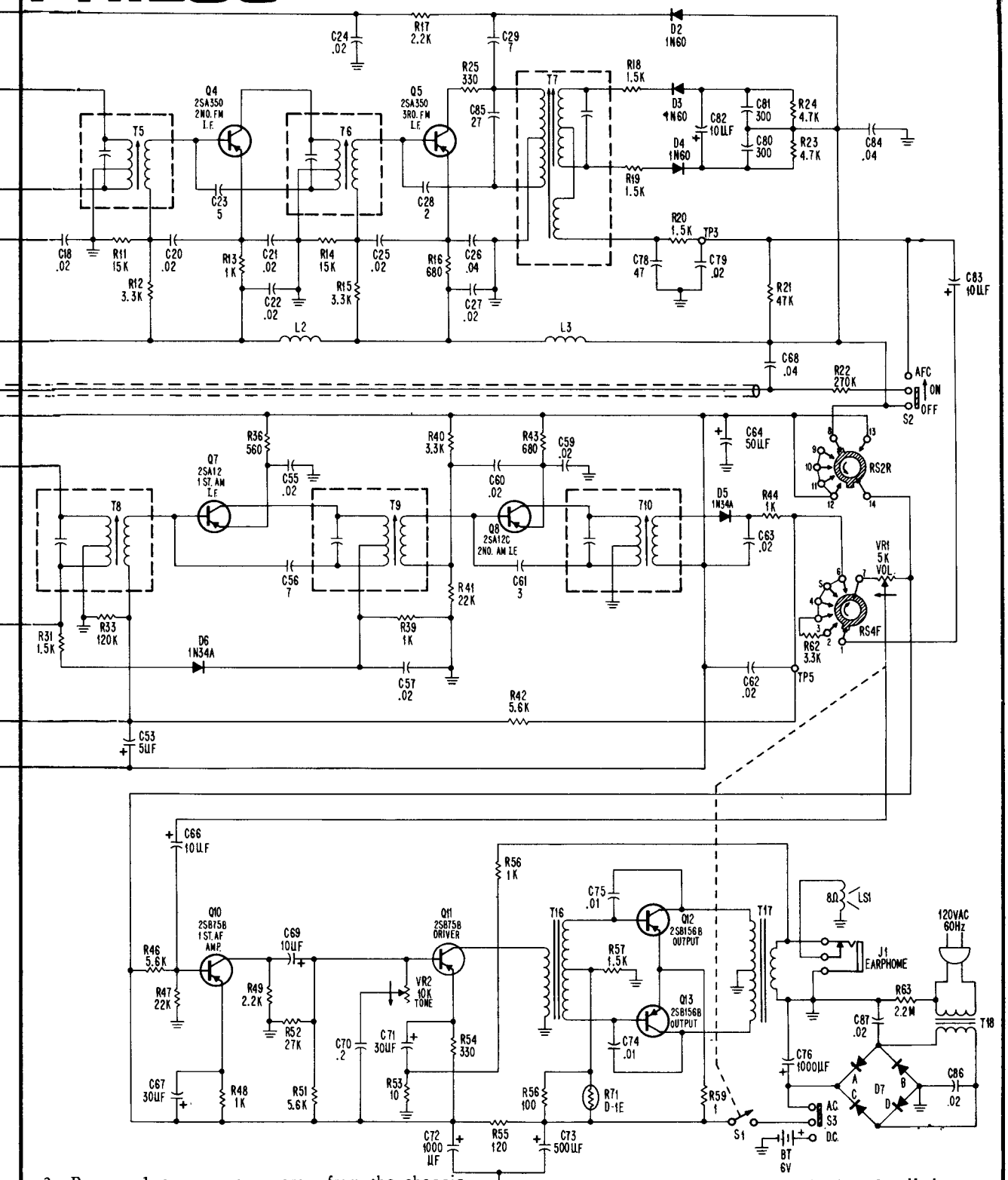


3. Remove 1 cross-recess screw from the chassis next to the power transformer and 1 cross-recess screw from the front of the tuner mounting bracket.
4. Remove 3 nuts, 2 on the left hand side of the chassis and 1 between the rotary switch bracket and the P.W. Panel.
5. Loosen the screw on the AFC knob and pull the knob off.
6. Remove J1 and S3 from the jack panel on the right-hand side. Do not remove the panel itself.
7. Lift the chassis on the right side slightly and pull to the right to clear the rotary switch shaft from the side of cabinet. Lift the chassis straight up to clear cabinet.

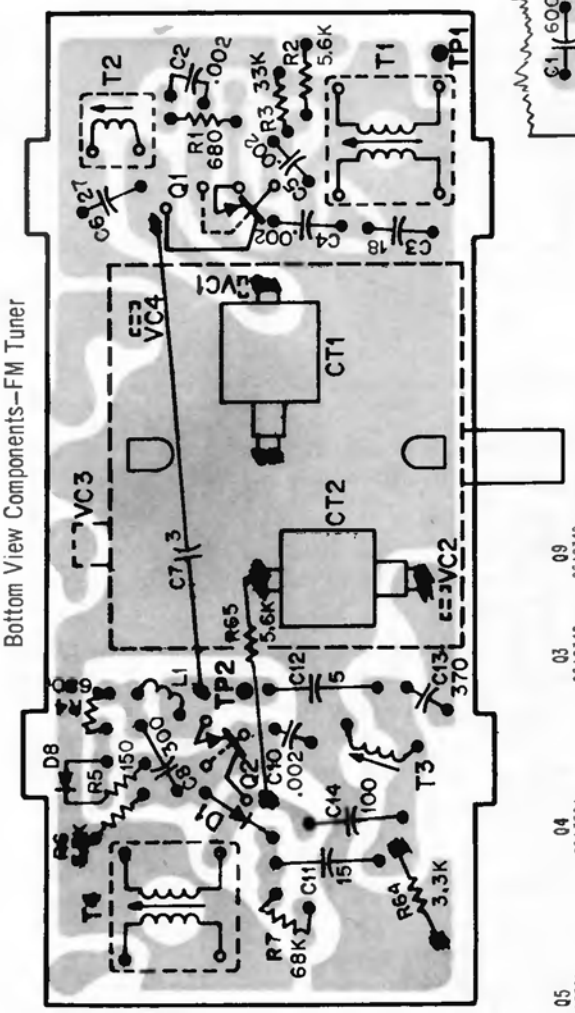

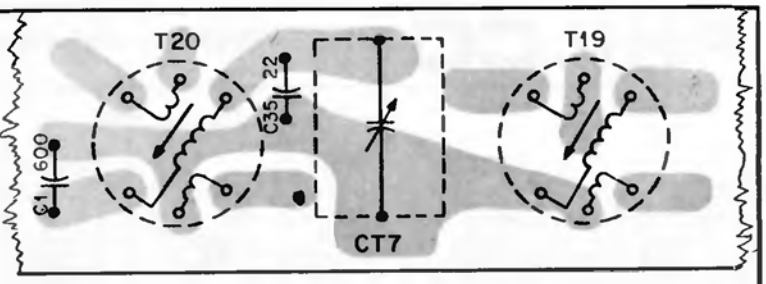

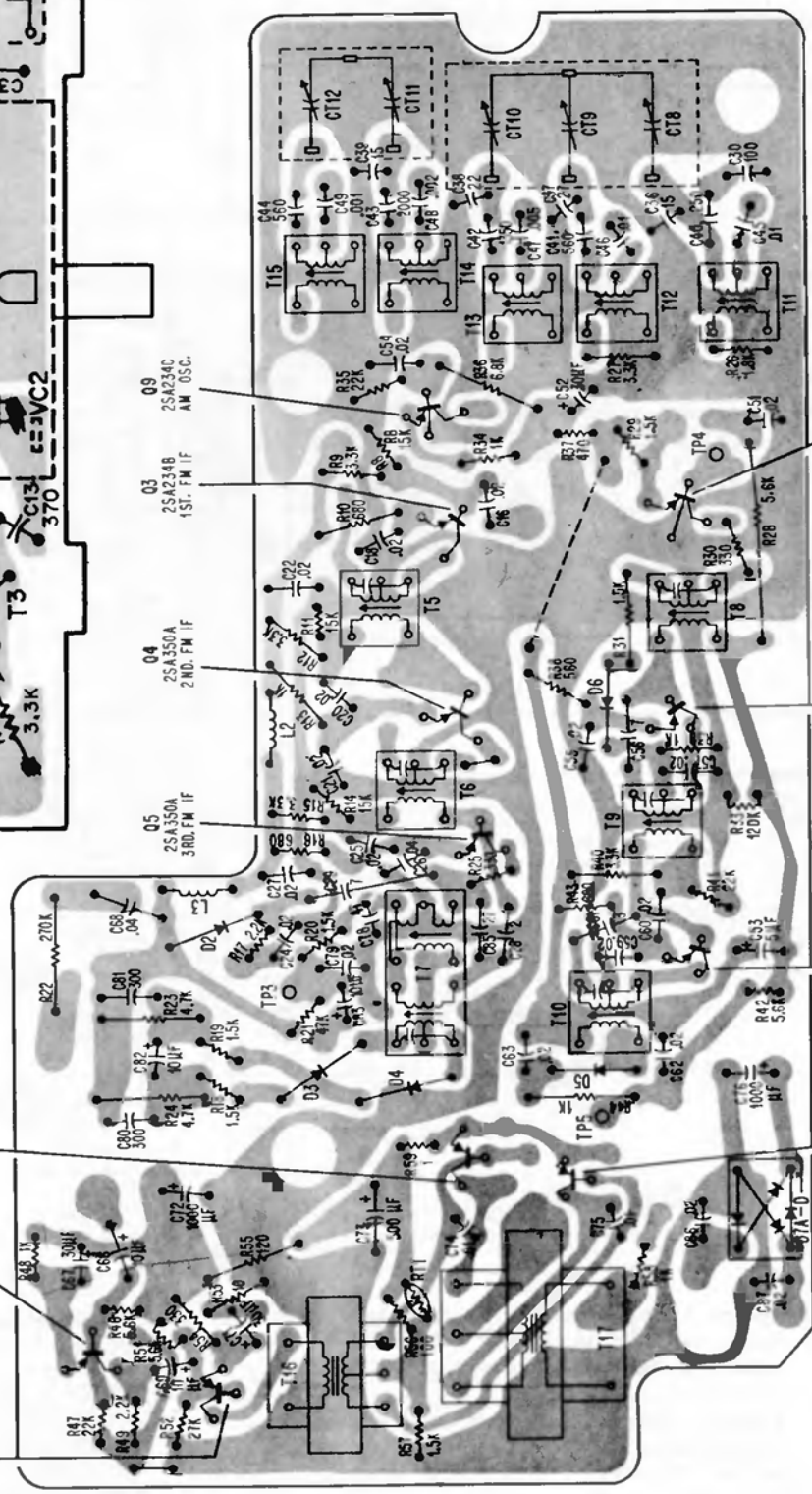

# PHILCO

## MODEL ST989BK

ANTENNA: AM-LW-SW1, self contained magnecore SW2, SW3, FM, telescopic adjustable monopole Terminal panel provided for external FM and SW antennas

FREQUENCY COVERAGE: FM-88MHz to 108MHz
AM-540KHz to 1620KHz
LW-150KHz to 350KHz
SW1-1.5MHz to 4.5MHz
SW2-3MHz to 9MHz
SW3-9MHz to 22MHz

INTERMEDIATE FREQUENCY: AM - 455KHz
FM - 10.7MHz

# PHILCO

## TABLE/CLOCK AM RADIO
## MODEL S-790BR

NOTES:
1. ALL VOLTAGES MEASURED WITH D+K MODEL 175 VTVM, VOLUME AT MINIMUM AND NO SIGNAL APPLIED.
2. CURRENT DRAIN 8.5 MA.
3. D+ 8.2 VDC
* USED AS REQUIRED

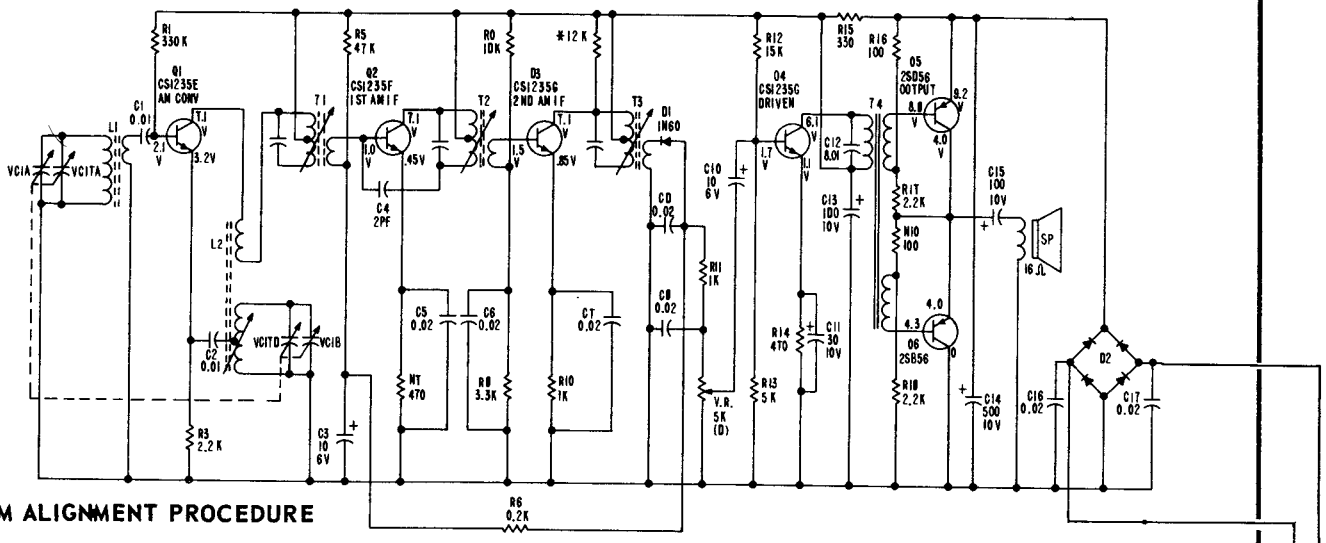


## AM ALIGNMENT PROCEDURE

| SIGNAL GENERATOR | | | RADIO | | |
|---|---|---|---|---|---|
| STEP | CONNECTION TO RADIO | DIAL SETTING | DIAL SETTING | SPECIAL INSTRUCTIONS | ADJUST |
| 1 | USE RADIATING LOOP (SEE NOTE BELOW) | 455KHz | GANG FULLY OPEN | ADJUST FOR MAX. OUTPUT IN ORDER GIVEN. | T1 1ST IF<br>T2 2ND IF<br>T3 3RD IF |
| 2 | SAME AS STEP 1 | 1620KHz | GANG OPEN | ADJUST FOR MAX. OUTPUT. | VC1TB OSC. TRIMMER |
| 3 | SAME AS STEP 1 | 1400KHz | 1400KHz | ADJUST FOR MAX. OUTPUT. | VC1TA ANT. TRIMMER |
| 4 | SAME AS STEP 1 | 580KHz | 580KHz | ADJUST FOR MAX. OUTPUT. ROCK GANG WHILE MAKING ADJUSTMENT | L2 OSC. COIL |

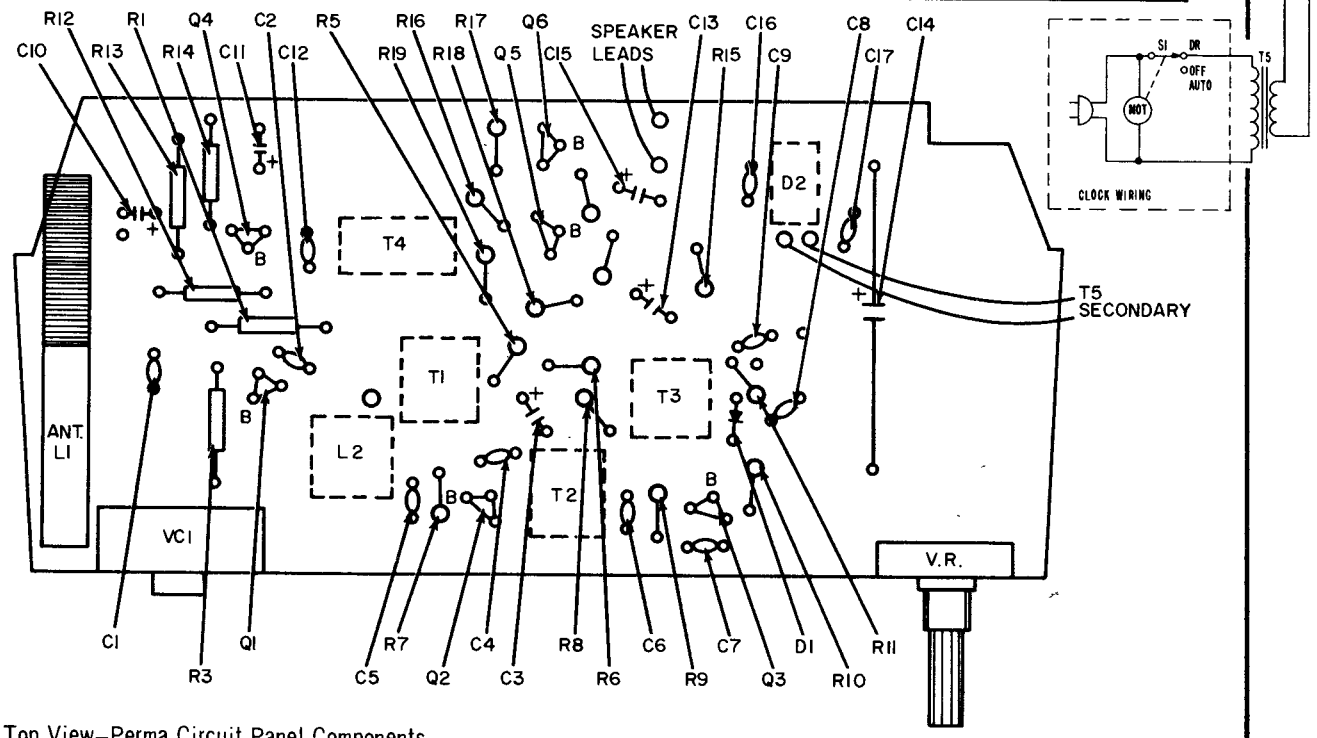


Top View–Perma Circuit Panel Components

# PHILCO

## AM/FM RADIO
## MODELS ST997 AND ST998

(Continued on next page.)

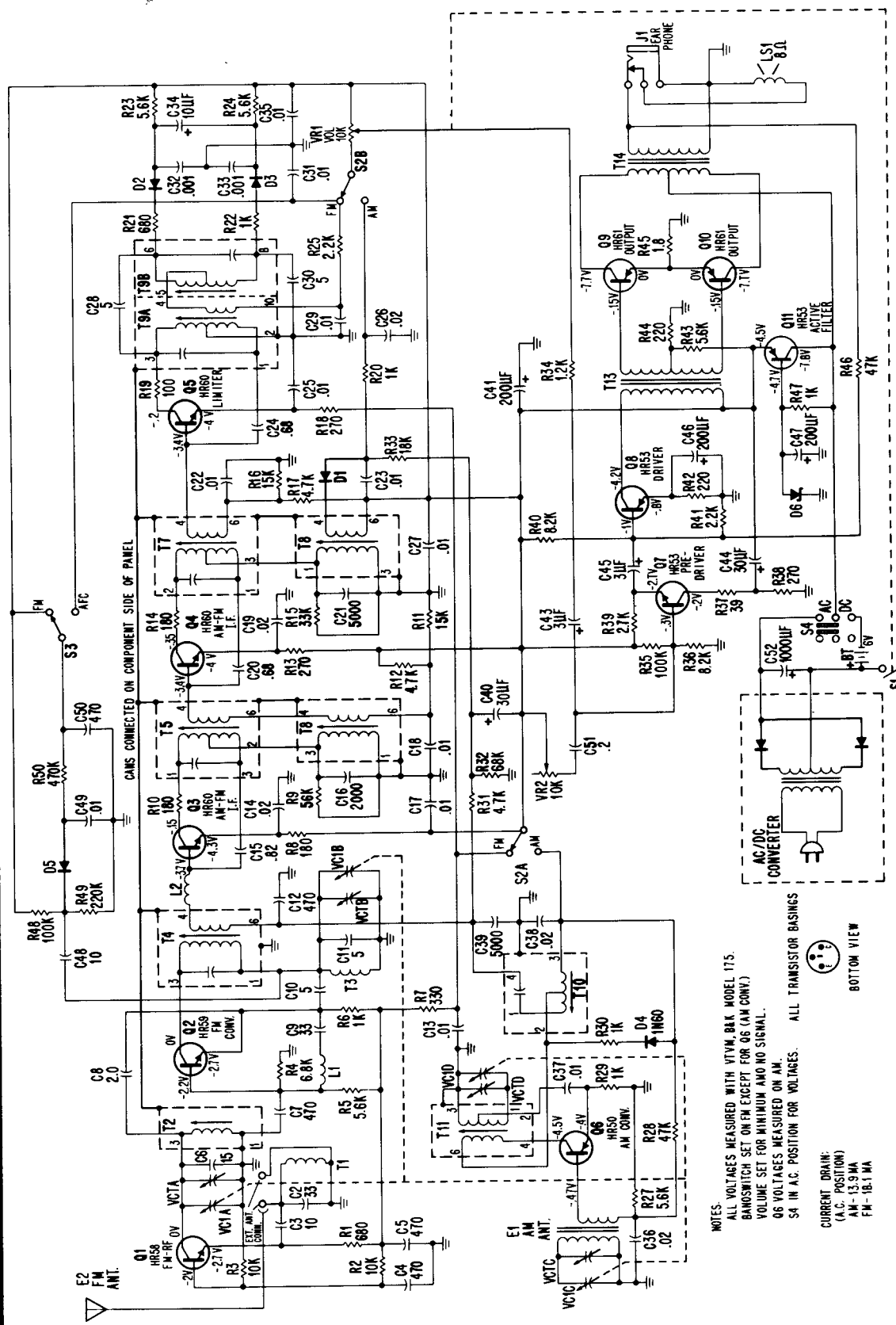


CIRCUIT: 11 transistors, 6 diodes in an AM-FM superheterodyne circuit.

FREQUENCY COVERAGE: AM, 520 KHz to 1620 KHz
FM, 88 MHz to 108 MHz

INTERMEDIATE FREQUENCY: AM, 455 KHz
FM, 10.7 MHz

POWER: AC, 117 volts, 60Hz through AC/DC converter, part no. 76-14128-1.

DC, ST998-4 type "D" cells (Eveready types 920 or 1050) in a 6-volt supply.
ST997-4 type "C" cells (Eveready type 1035) in a 6-volt supply

# PHILCO

## AM/FM RADIO
## MODELS ST997 AND ST998

(Continued from preceding page.)

Bottom View—Perma-Circuit Panel—Models ST997 and ST998

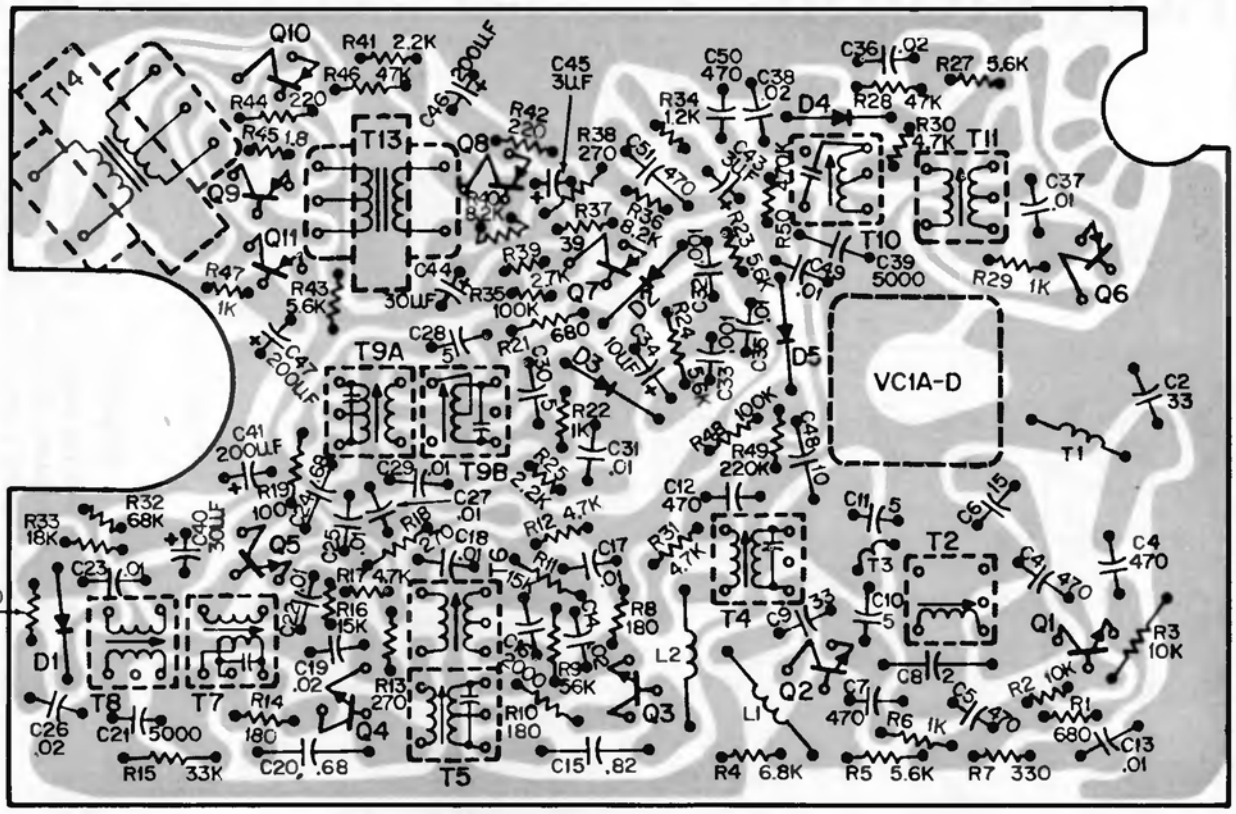


**AM ALIGNMENT**

| SIGNAL GENERATOR | | | RADIO | | |
|---|---|---|---|---|---|
| STEP | CONNECTION TO RADIO | DIAL SETTING | DIAL SETTING | SPECIAL INSTRUCTIONS | ADJUST |
| 1 | RADIATING LOOP (SEE NOTE 1) | 455 KHZ | TUNING GANG FULLY OPEN | ADJUST FOR MAX. OUTPUT IN ORDER GIVEN. | T8, T6 & T10 |
| 2 | SAME AS STEP 1 | 1650 KHZ | TUNING GANG FULLY OPEN | ADJUST FOR MAX. OUTPUT. | VCTD AM OSC. |
| 3 | SAME AS STEP 1 | 1400 KHZ | 1400 KHZ | ADJUST FOR MAX. OUTPUT. | VCTC ANT. TRIM. |
| 4 | SAME AS STEP 1 | 600 KHZ | 600 KHZ | ADJUST FOR MAX. OUTPUT. ROCK TUNING GANG DURING ADJUSTMENT. | T11 AM OSC. |

**FM ALIGNMENT**

| STEP | CONNECTION TO RADIO | DIAL SETTING | DIAL SETTING | SPECIAL INSTRUCTIONS | ADJUST |
|---|---|---|---|---|---|
| 1 | COLLECTOR OF Q1 THRU .01 MF CAPACITOR | 10.7 MHZ ±75 KHZ SWEEP | TUNING GANG FULLY OPEN | ADJUST FOR MAXIMUM OUTPUT IN ORDER GIVEN. REDUCE GENERATOR OUTPUT AS NECESS. | T9A, T7, T5 & T4 |
| 2 | SAME AS STEP 1 | 10.7 MHZ 30% AM | TUNING GANG FULLY OPEN | ADJUST FOR MINIMUM OUTPUT (A NULL BETWEEN TWO PEAKS) | T9B |
| 3 | REPEAT STEPS 1 AND 2 UNTIL NO FURTHER IMPROVEMENT IS OBTAINED. | | | | |
| 4 | CONNECT TO ANTENNA TERMINAL THRU 47 OHM RESISTOR | 87.5 MHZ ±75 KHZ | TUNING GANG FULLY CLOSED | ADJUST FOR MAX. OUTPUT. | T3 (SEE NOTE "A") FM OSC. |
| 5 | SAME AS STEP 4 | 108.5 MHZ ±75 KHZ | TUNING GANG FULLY OPEN | ADJUST FOR MAX. OUTPUT. | VCTB FM OSC. |
| 6 | REPEAT STEPS 4 AND 5 UNTIL NO FURTHER IMPROVEMENT IS OBTAINED. | | | | |
| 7 | SAME AS STEP 4 | 90 MHZ ±75 KHZ | 90 MHZ | ADJUST FOR MAX. OUTPUT. | T2 |
| 8 | SAME AS STEP 4 | 105 MHZ ±75 KHZ | 105 MHZ | ADJUST FOR MAX. OUTPUT. | VCTA |

# RCA VICTOR

## RJA 35
Chassis RC-1224C

## RJD 39
Chassis RC-1224D

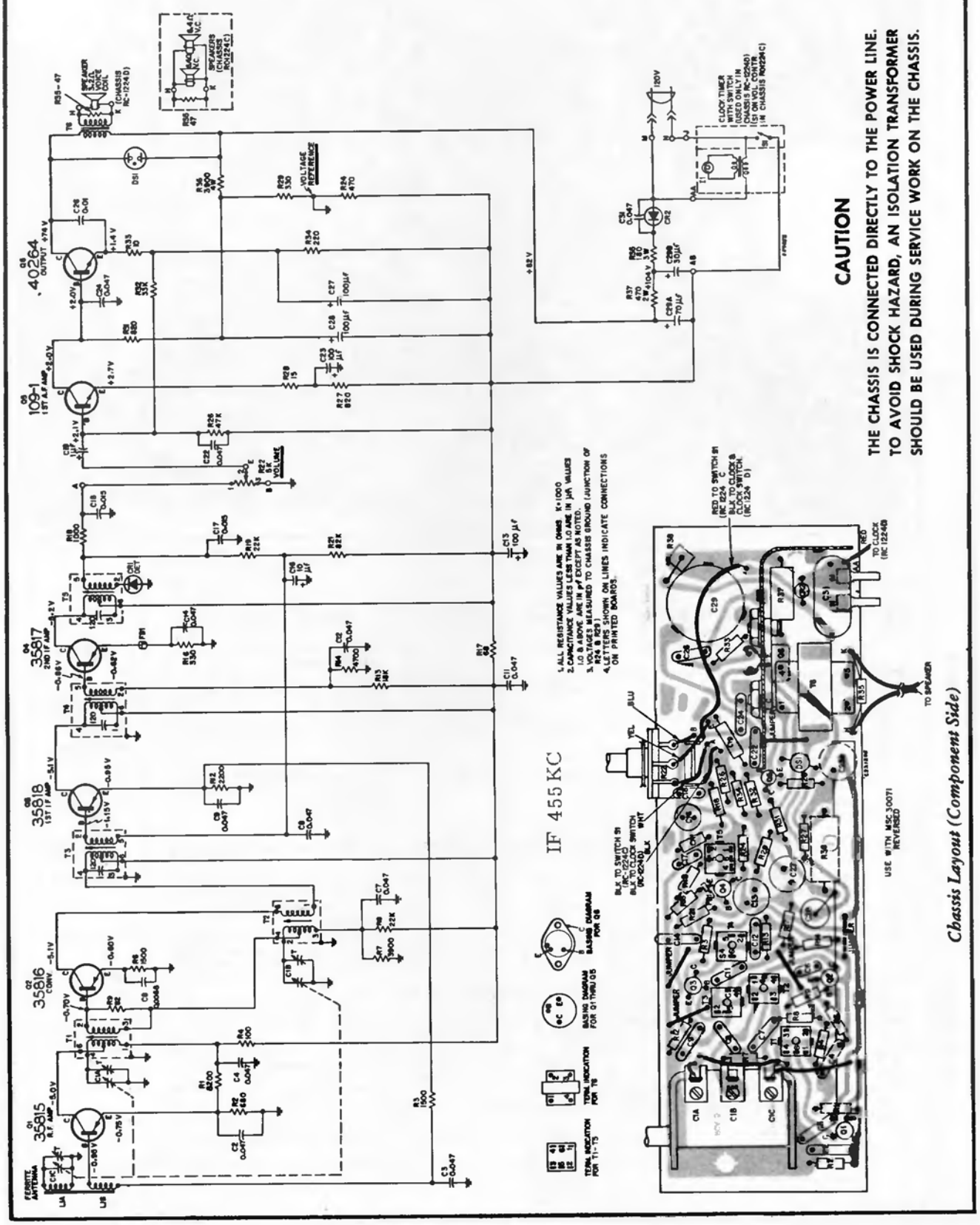

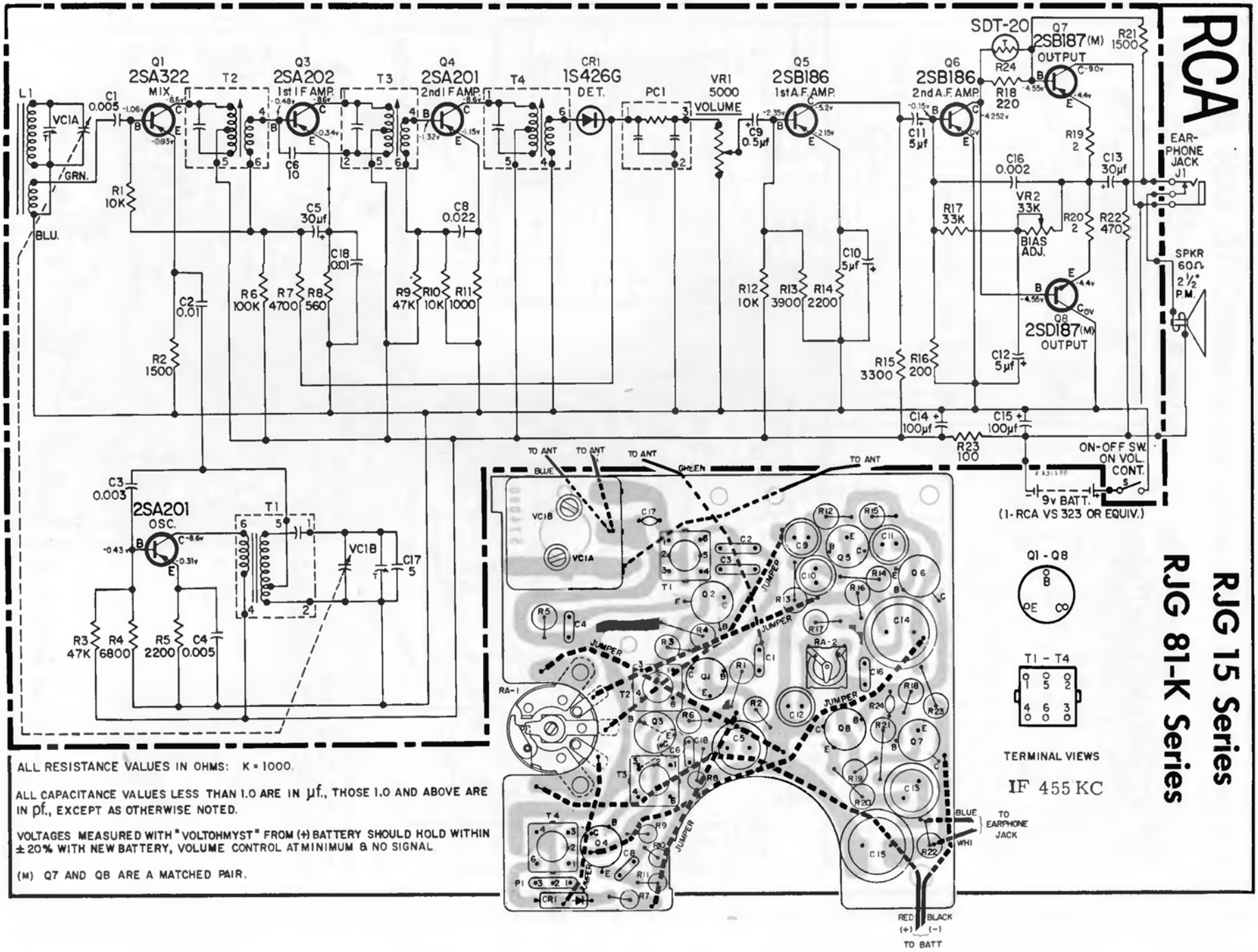


ALL RESISTANCE VALUES IN OHMS: K = 1000.

ALL CAPACITANCE VALUES LESS THAN 1.0 ARE IN µf., THOSE 1.0 AND ABOVE ARE IN pf., EXCEPT AS OTHERWISE NOTED.

VOLTAGES MEASURED WITH "VOLTOHMYST" FROM (+) BATTERY SHOULD HOLD WITHIN ±20% WITH NEW BATTERY, VOLUME CONTROL AT MINIMUM & NO SIGNAL.

(M) Q7 AND Q8 ARE A MATCHED PAIR.

# RCA VICTOR Models RJG 25 Series, RJG 86 Series

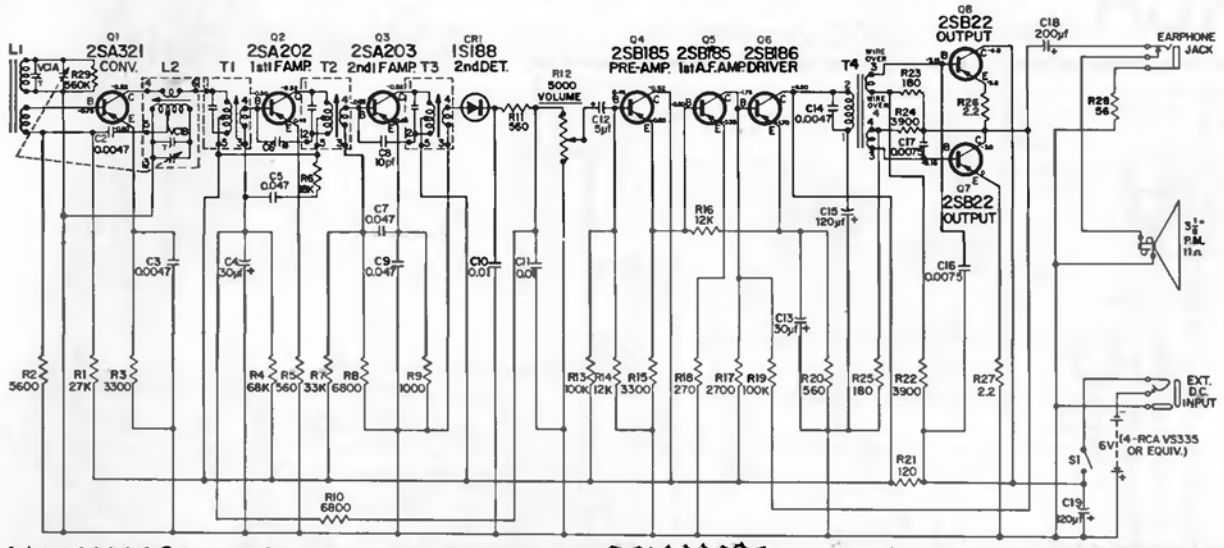


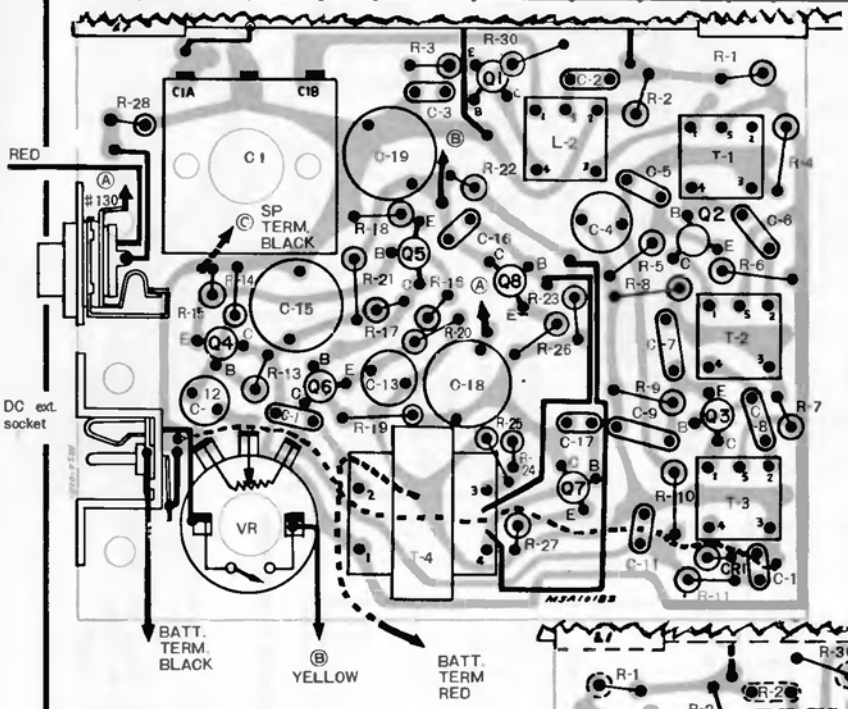


| Step | Signal Gen. Output | Dial Pointer Setting | Adjust for Max. Output |
|---|---|---|---|
| 1 | 455 kc | Gang open | T3 (3rd IF) |
| 2 | | | T2 (2nd IF) |
| 3 | | | T1 (1st IF) |
| 4 | Repeat Steps 1, 2, and 3 | | |
| 5 | 520 kc | Gang closed | L2 (Osc. coil) |
| 6 | 1650 kc | Gang open | CIB-T (Osc. trim.) |
| 7 | 1400 kc | 1400 kc (rock gang) | CIA-T (Ant. trim.) |
| 8 | Repeat Steps 5, 6, and 7 | | |

Connect Signal Generator to— Loop of wire placed near antenna for radiated signal

1. RESISTANCE VALUES ARE IN OHMS: K=1000.
2. CAPACITANCE VALUES LESS THAN 1.0 ARE IN µf, VALUES 1.0 AND ABOVE ARE IN pf., EXCEPT AS OTHERWISE NOTED.
3. VOLTAGES ARE MEASURED WITH A "VOLTOHMYST" TO CHASSIS GROUND WITH NO SIGNAL AND SHOULD HOLD WITHIN ±20% AT RATED SUPPLY VOLTAGE.

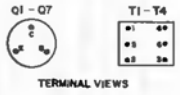


TERMINAL VIEWS

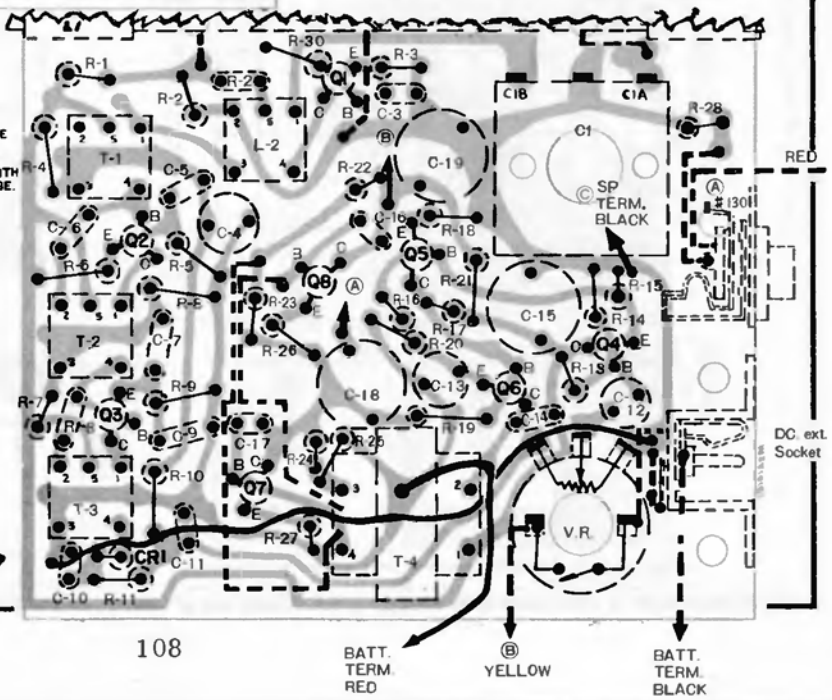


*Chassis Layout—Wiring Side* →

# RCA RJG 37 Series

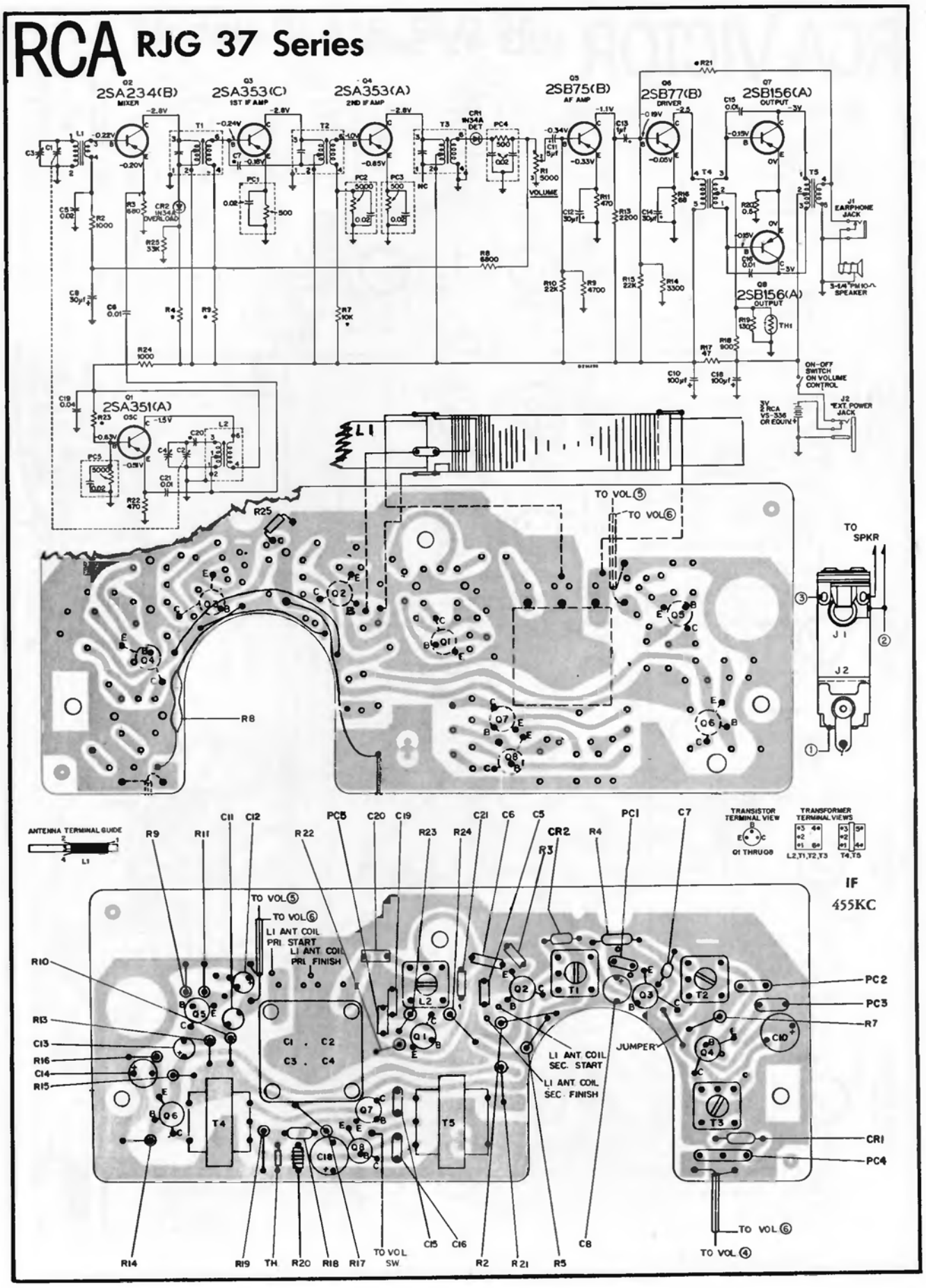

# RCA VICTOR RJG 42 Series

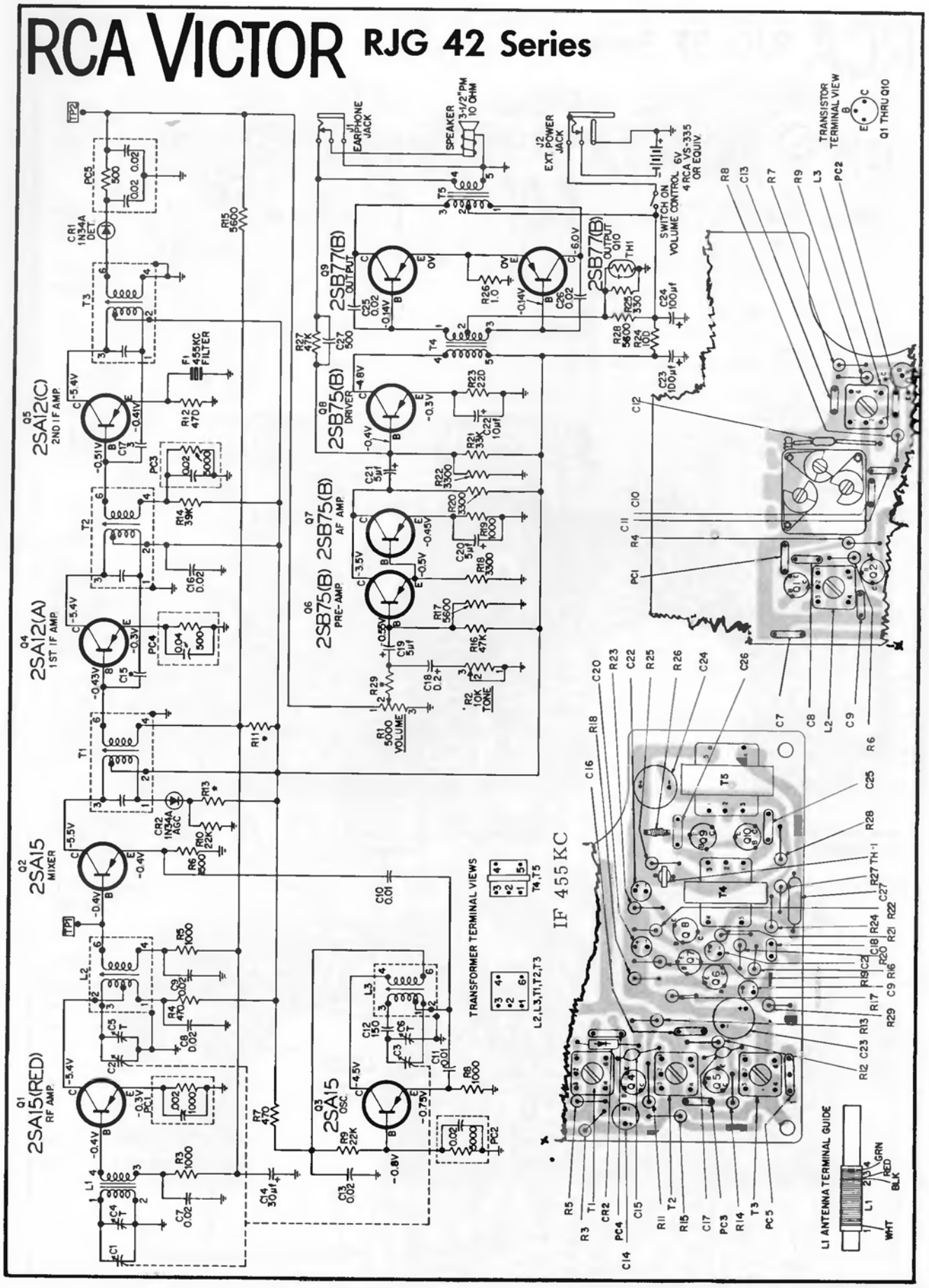

# RCA Models RLA19, RLD 25

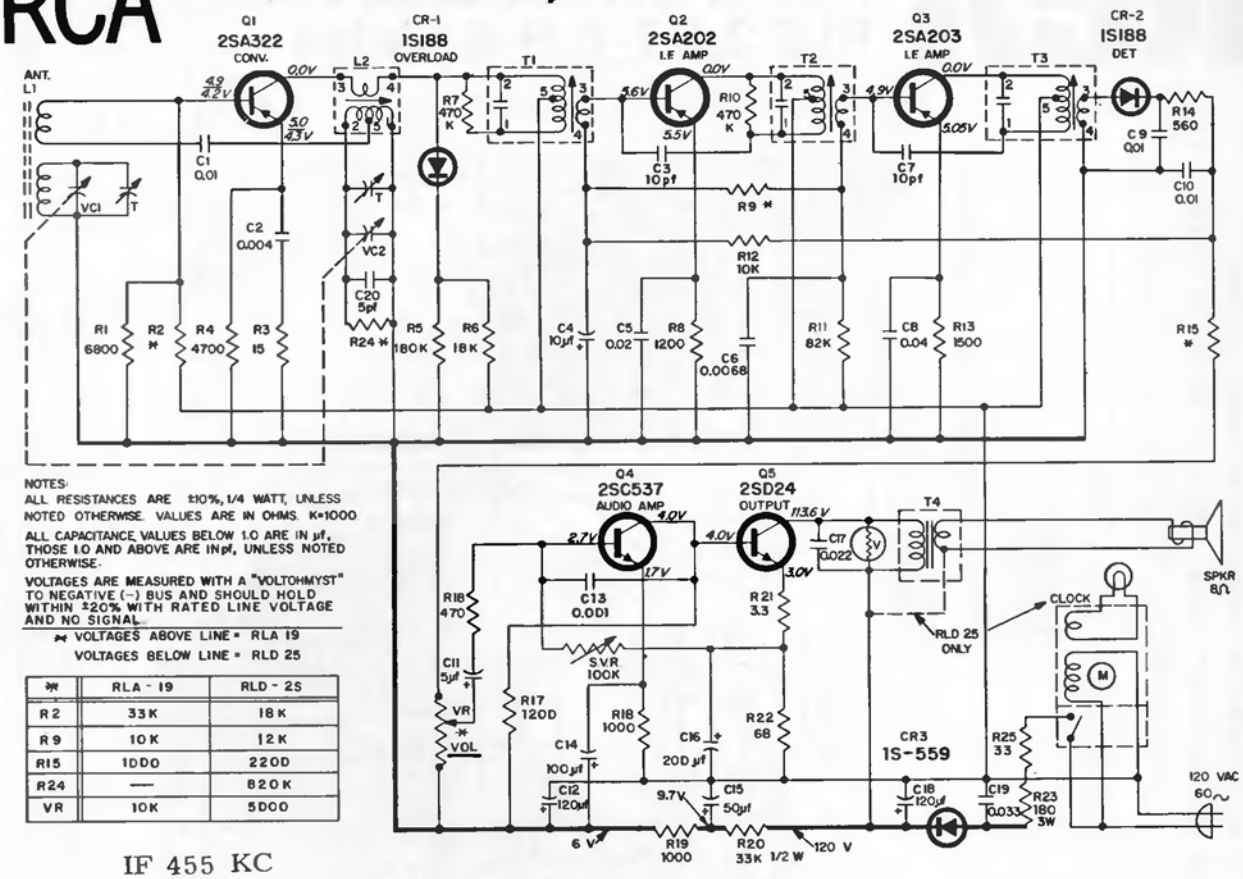


NOTES:
ALL RESISTANCES ARE ±10%, 1/4 WATT, UNLESS NOTED OTHERWISE. VALUES ARE IN OHMS. K=1000.
ALL CAPACITANCE VALUES BELOW 1.0 ARE IN µf, THOSE 1.0 AND ABOVE ARE IN pf, UNLESS NOTED OTHERWISE.
VOLTAGES ARE MEASURED WITH A "VOLTOHMYST" TO NEGATIVE (−) BUS AND SHOULD HOLD WITHIN ±20% WITH RATED LINE VOLTAGE AND NO SIGNAL.
* VOLTAGES ABOVE LINE = RLA 19
VOLTAGES BELOW LINE = RLD 25

| * | RLA - 19 | RLD - 25 |
|---|---|---|
| R2 | 33K | 18K |
| R9 | 10K | 12K |
| R15 | 1000 | 2200 |
| R24 | — | 820K |
| VR | 10K | 5000 |

IF 455 KC

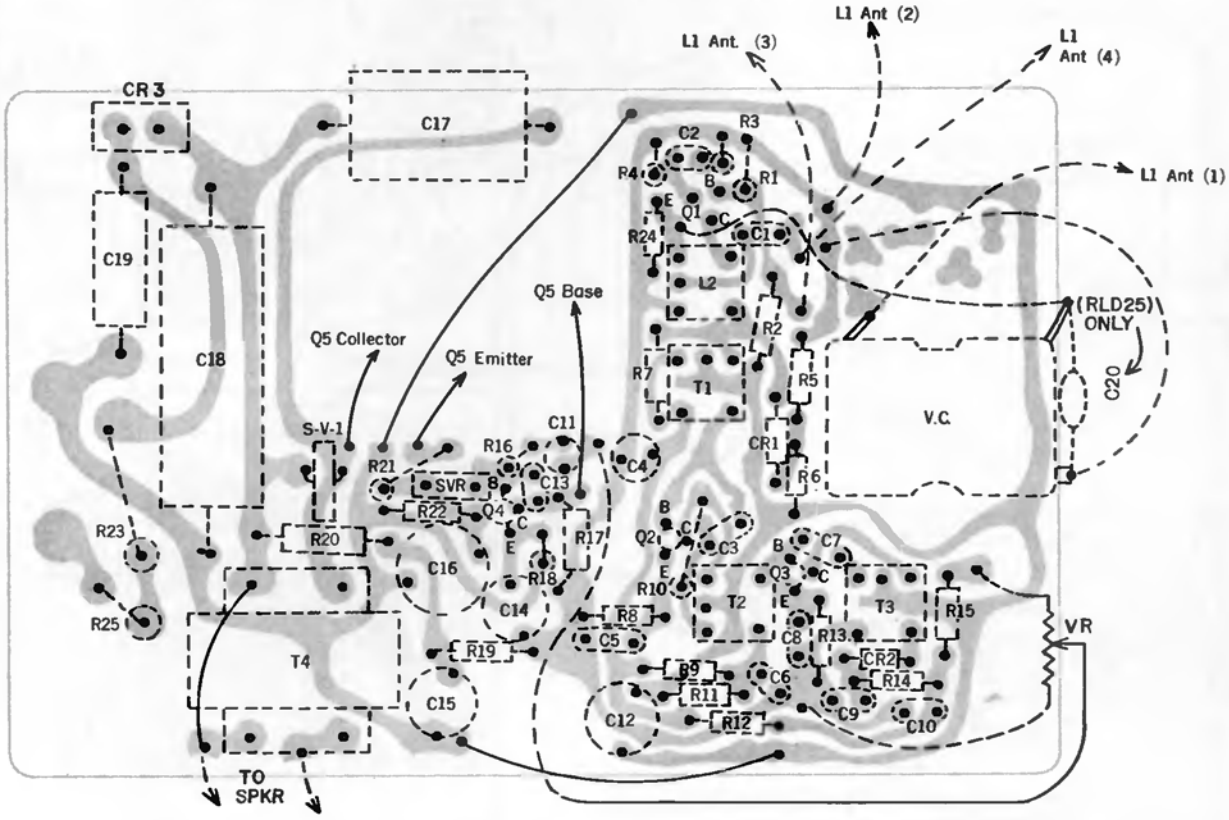

# RLC 2,4,5,8-K Series
# RLS 3,5,7-K,8-K Series

RZC, RZS 9-K Series are similiar.

(Continued on next page.)

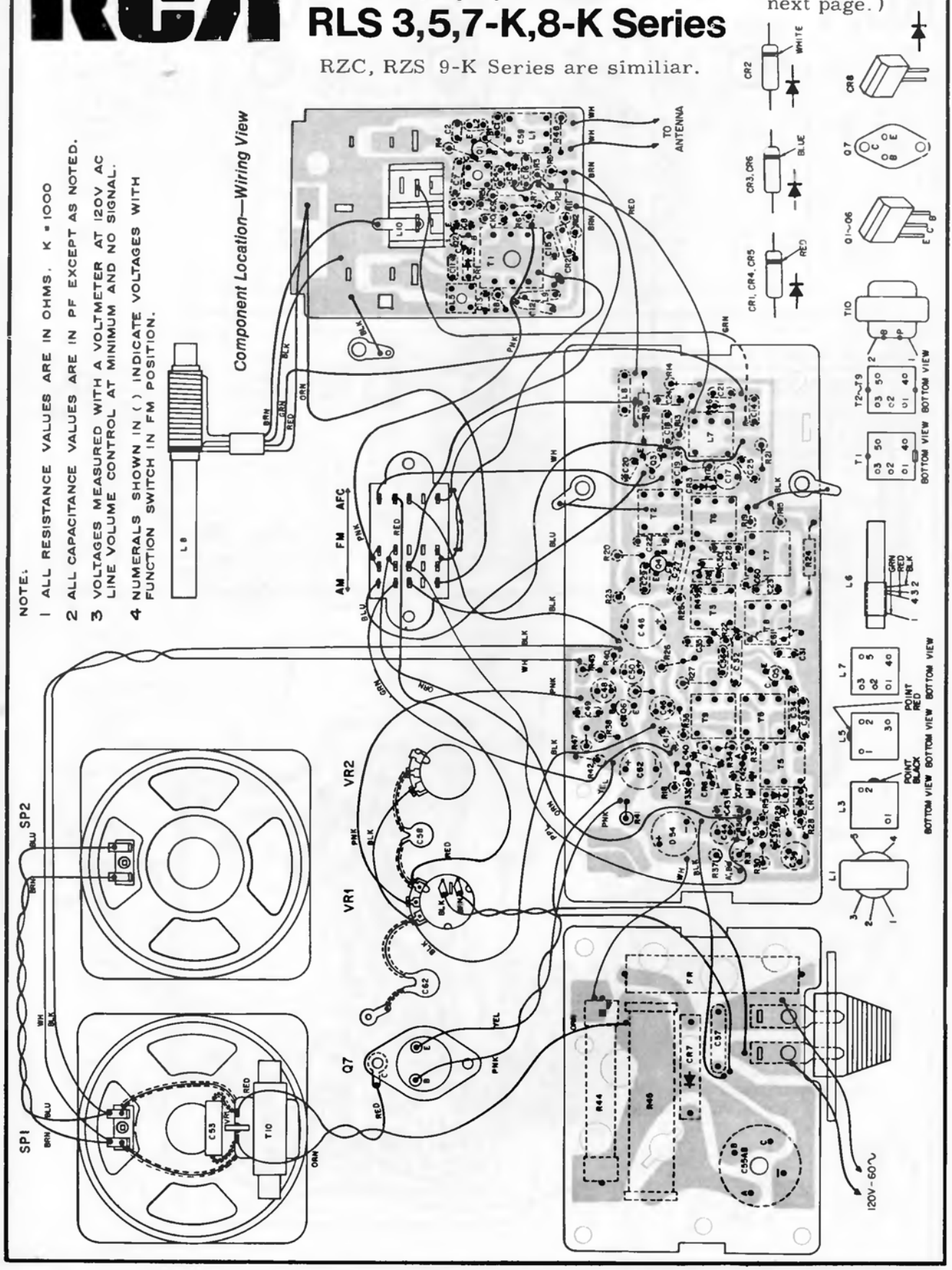

RCA Models RLC 2, 4, 5, 8-K Series
RLS 3, 5, 7-K, 8-K Series

(Continued from preceding page.)

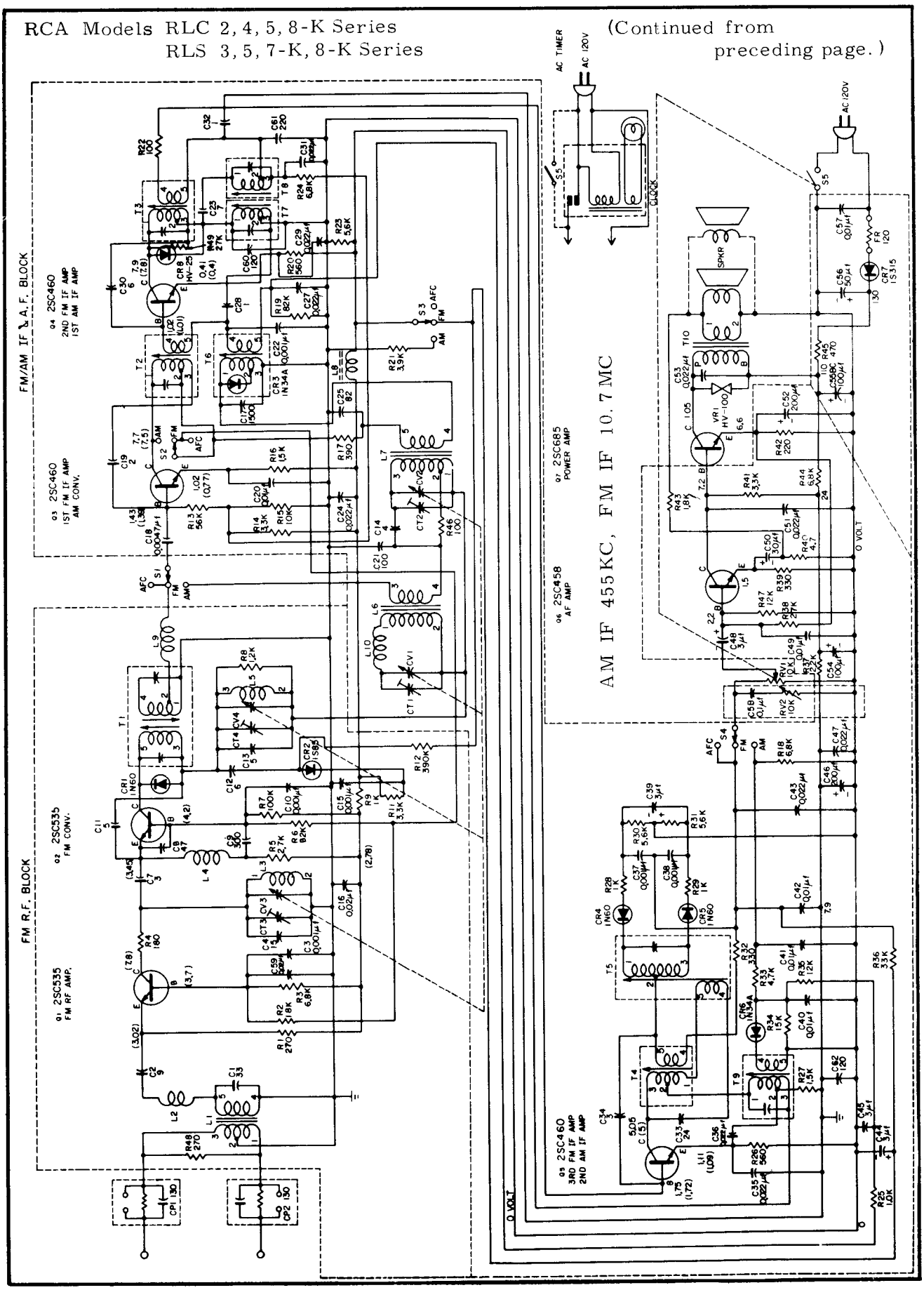

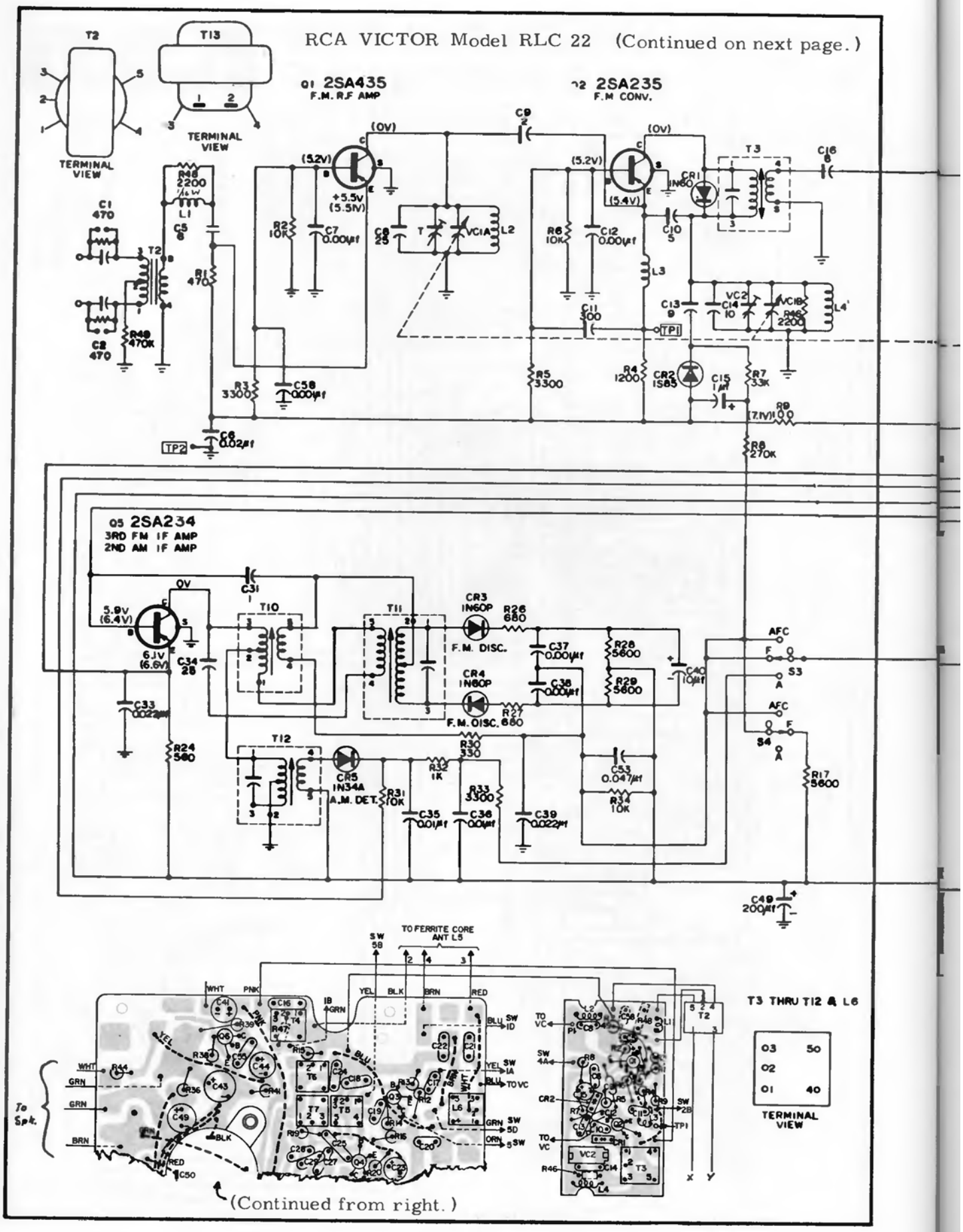
T2
TERMINAL VIEW
T13
TERMINAL VIEW
Q1 2SA435
F.M. R.F AMP
Q2 2SA235
F.M CONV.
Q5 2SA234
3RD FM IF AMP
2ND AM IF AMP
F.M. DISC.
A.M. DET.
AFC
S3
S4
TO FERRITE CORE ANT L5
T3 THRU T12 & L6
TERMINAL VIEW
To Spk.
(Continued from right.)

# RCA Model RLC 22 (Continued from preceding page.)

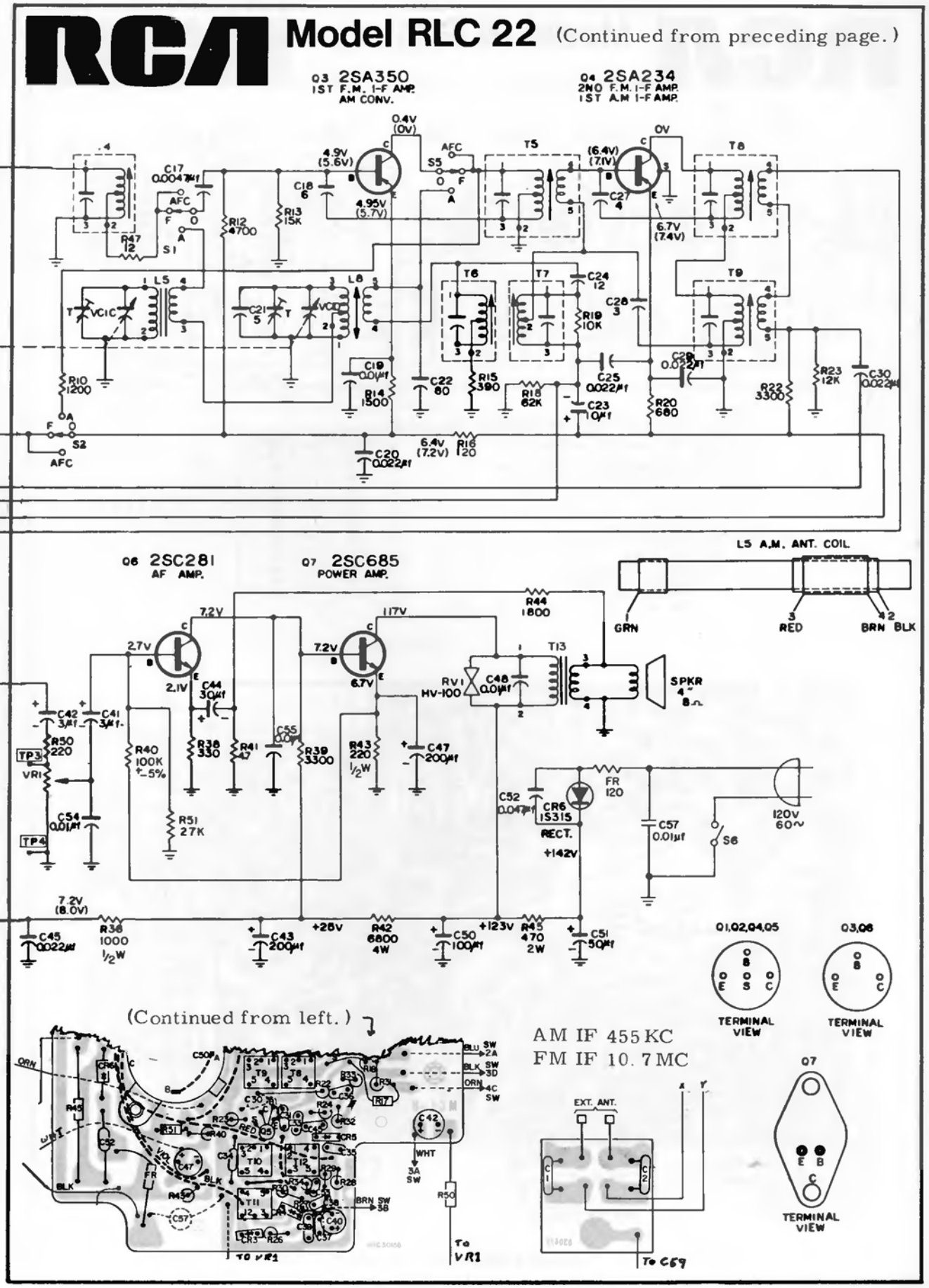

# RCA Model RLG 11

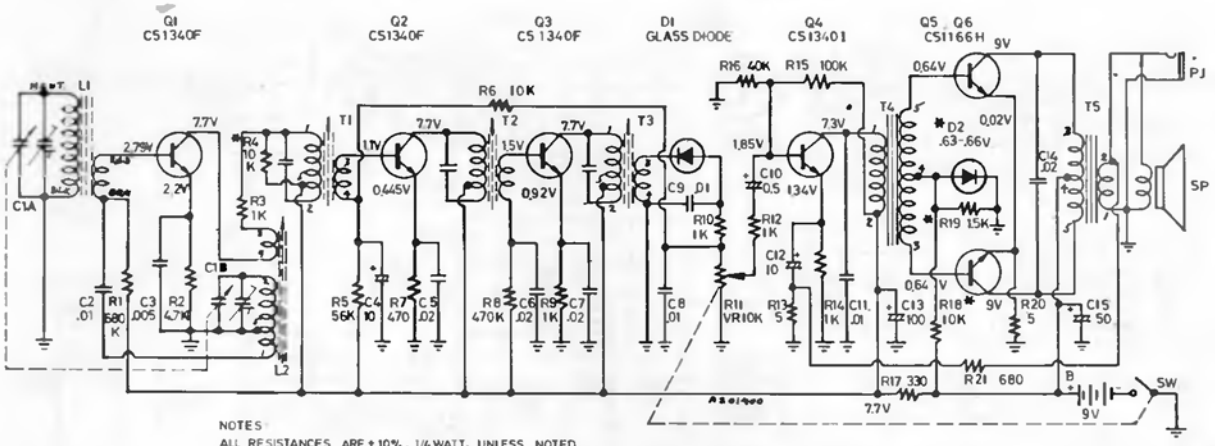


NOTES

ALL RESISTANCES ARE ±10%, 1/4 WATT, UNLESS NOTED OTHERWISE. VALUES ARE IN OHMS. K=1000

ALL CAPACITANCE VALUES ARE IN uf, UNLESS NOTED OTHERWISE

VOTAGES ARE MEASURED WITH A "TRIPLETT" FROM (–) BATTERY AND SHOULD HOLD WITHIN ±20% WITH A NEW BATTERY, VOLUME CONTROL AT MINIMUM AND NO SIGNAL.

*R4, R18, R19 AND D2 MAY CHANGE TO FOLLOWING VALUES ON SOME SETS

R4 10K, 6K, OR 4.7K
R18 10K OR 6K
R19 1.5K, 1K, OR NONE
D2 0.6–0.63 VOLTS, TYPE 6063, OR
0.63–0.66 VOLTS, TYPE 6366, OR
0.66–0.70 VOLTS, TYPE 6670.

| POWER OUTPUT Vs CURRENT | |
|---|---|
| mW | mA |
| 0 | 8 |
| 25 | 19 |
| 50 | 24.2 |
| 75 | 29 |
| 100 | 32.5 |
| 125 | 36 |
| 150 | 39 |
| 175 | 42 |
| 200 | 45 |
| 250 | 48.5 |
| 300 | 56 |

IF 455 KC

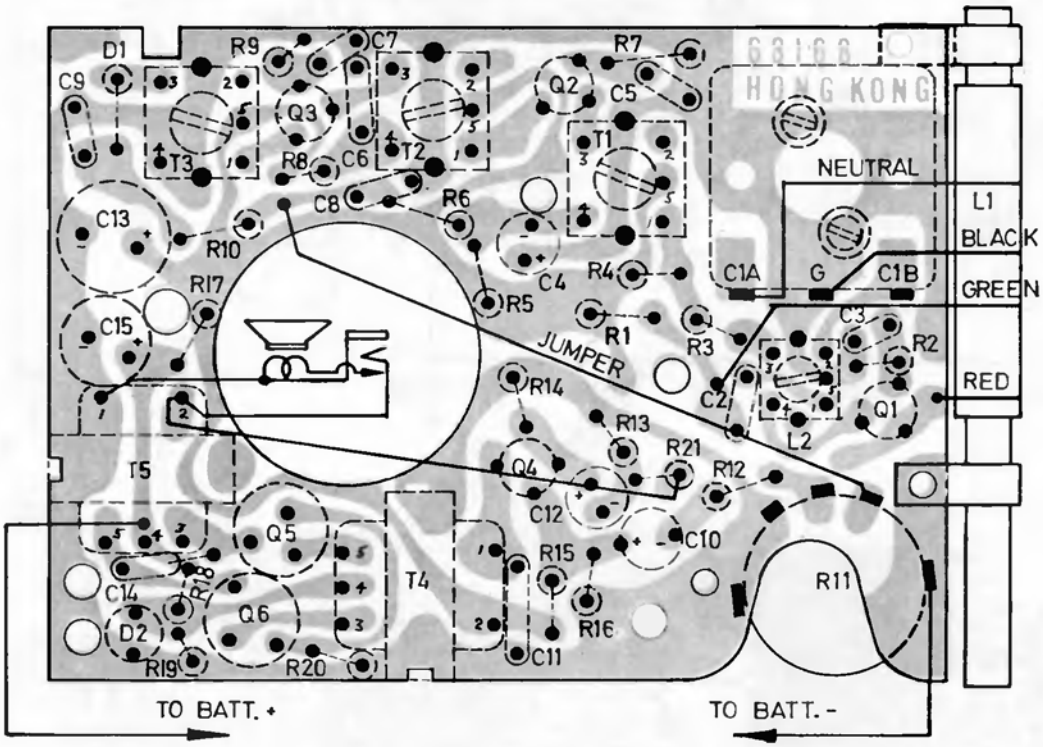


*Chassis Layout*

# RCA

## RLG 16 Series, RLG 20 Series

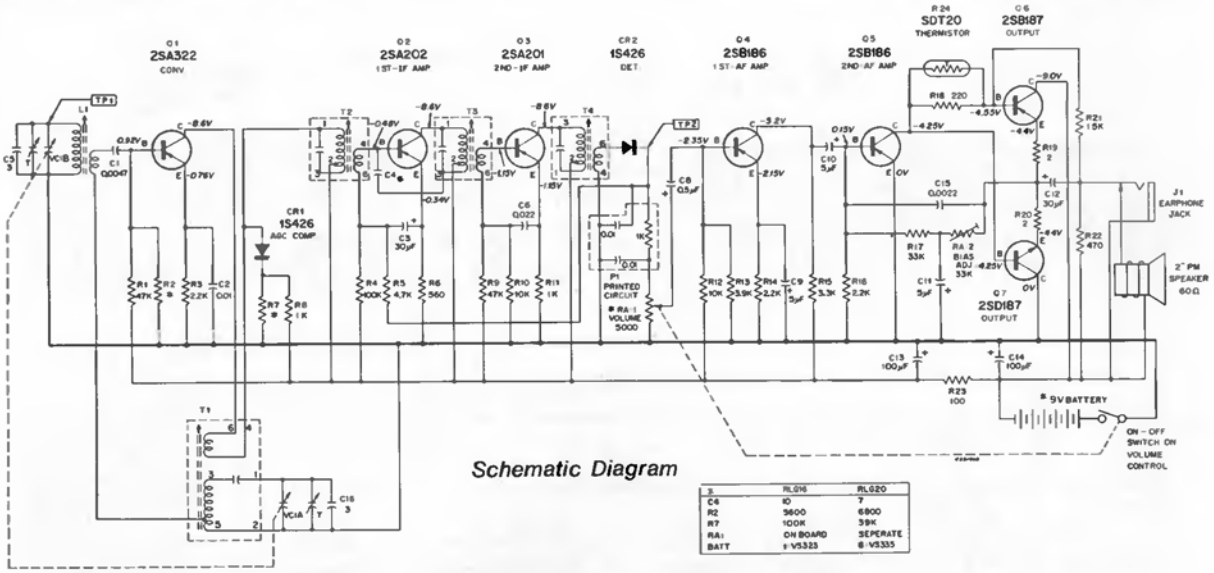


*Schematic Diagram*

| | RLG16 | RLG20 |
|---|---|---|
| C4 | 10 | 7 |
| R2 | 5600 | 6800 |
| R7 | 100K | 39K |
| RA1 | ON BOARD | SEPERATE |
| BATT | 9-V5323 | 6-V5335 |

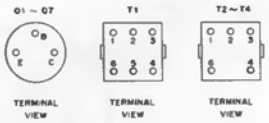


*VOLTAGES MEASURED WITH "VOLTOMYST" FROM (+) BATTERY. SHOULD HOLD WITHIN ±20% WITH NEW BATTERY. VOLUME CONTROL AT MINIMUM AND NO SIGNAL

ALL RESISTANCE VALUES IN OHMS K=1000
ALL CAPACITANCE VALUES LESS THAN 10 ARE IN μF. THOSE ABOVE 10 ARE IN pF EXCEPT AS NOTED

Q6 AND Q7 ARE A MATCHED PAIR

IF 455 KC

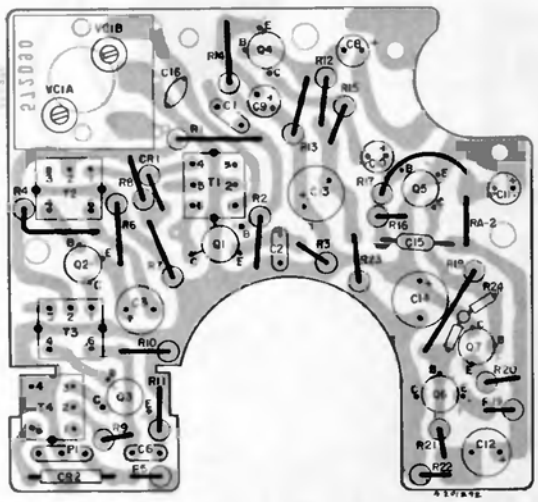

RLG 16

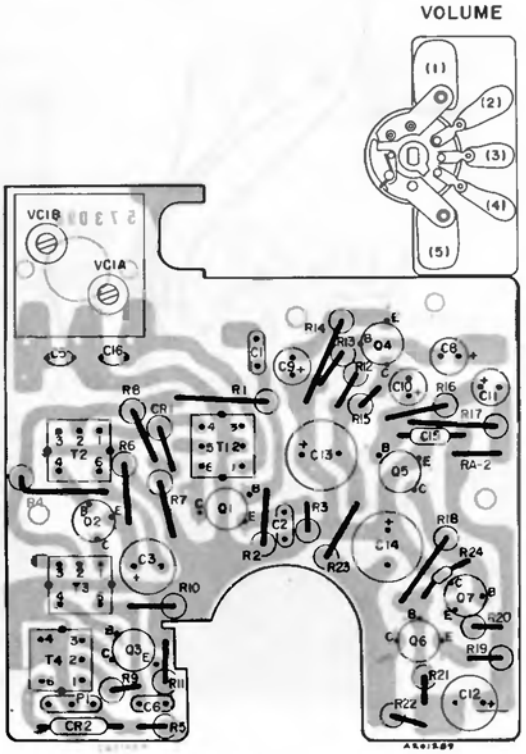


RLG 20

*Component Location*

# RLG 22 Series

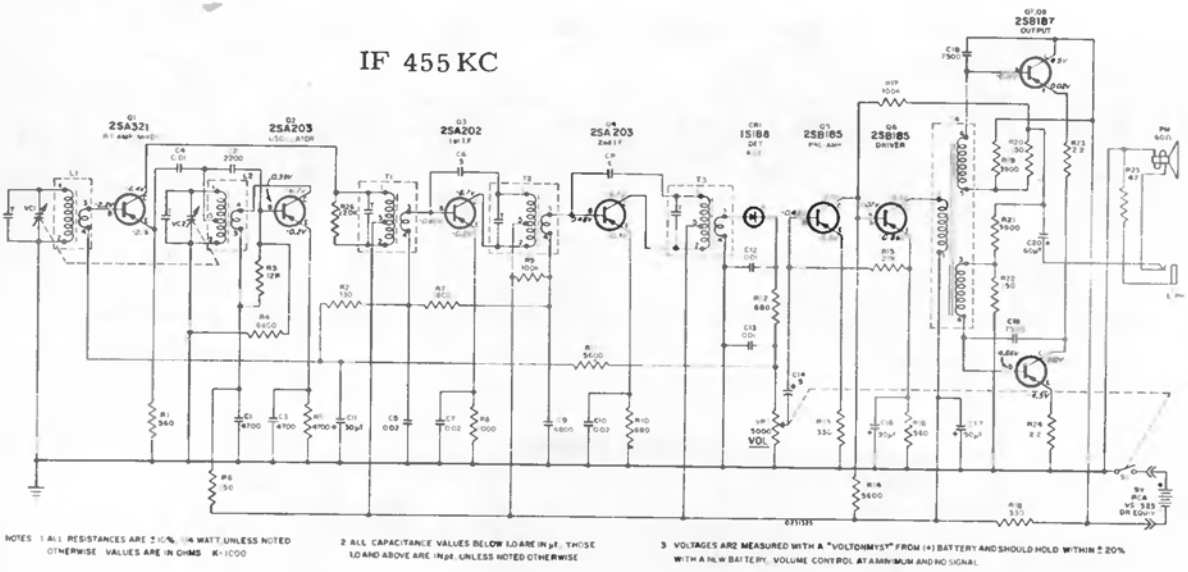


*Schematic Diagram*

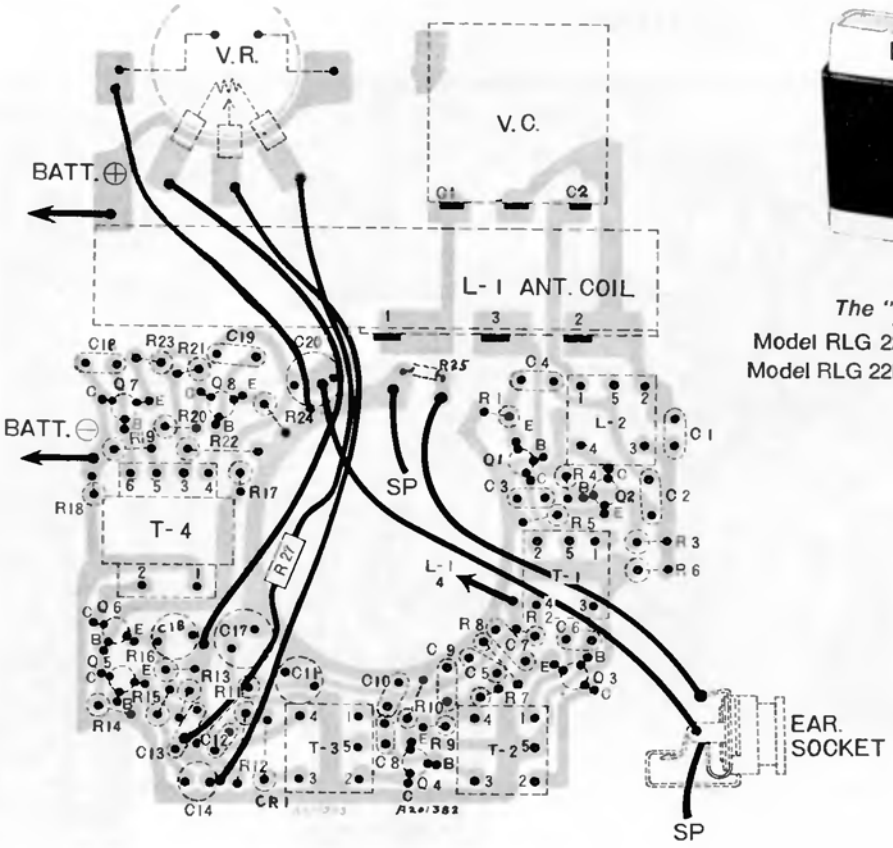


*The "Rogue"*
Model RLG 22A—Blue/White
Model RLG 22N—Maple/White

*Component Location (Wiring View)*

# RCA RLG 23 Series

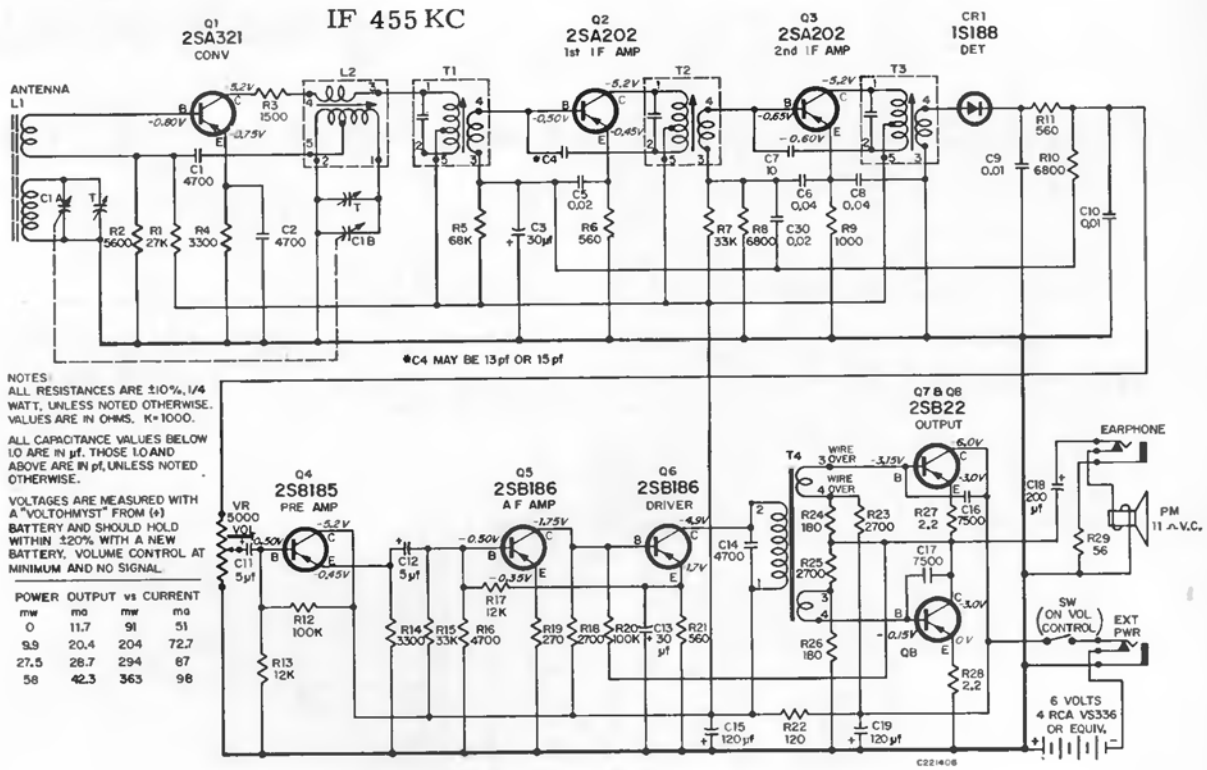


NOTES:
ALL RESISTANCES ARE ±10%, 1/4 WATT, UNLESS NOTED OTHERWISE. VALUES ARE IN OHMS. K=1000.

ALL CAPACITANCE VALUES BELOW 1.0 ARE IN µf. THOSE 1.0 AND ABOVE ARE IN pf, UNLESS NOTED OTHERWISE.

VOLTAGES ARE MEASURED WITH A "VOLTOHMYST" FROM (+) BATTERY AND SHOULD HOLD WITHIN ±20% WITH A NEW BATTERY. VOLUME CONTROL AT MINIMUM AND NO SIGNAL.

POWER OUTPUT vs CURRENT

| mw | ma | mw | ma |
|---|---|---|---|
| 0 | 11.7 | 91 | 51 |
| 9.9 | 20.4 | 204 | 72.7 |
| 27.5 | 28.7 | 294 | 87 |
| 58 | 42.3 | 363 | 98 |

*Schematic Diagram*

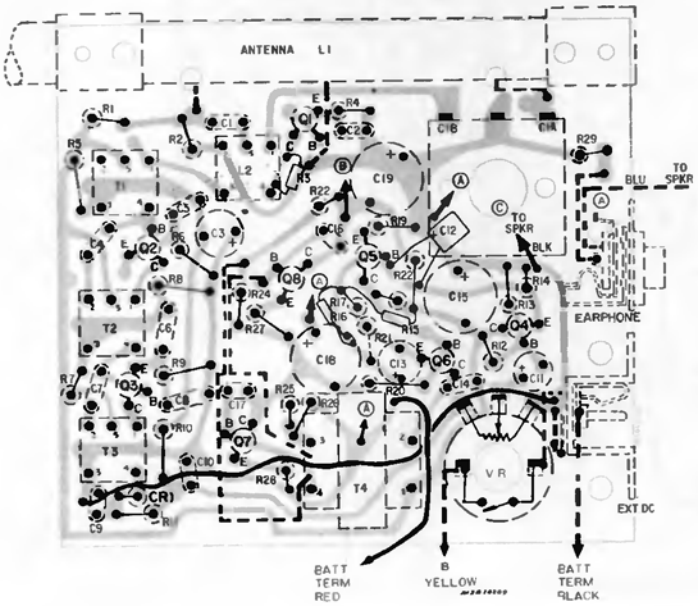


*Component Locations (Wiring View)*

*The "Herald"*

Model RLG 23A—Blue

# RCA Model RLG 34

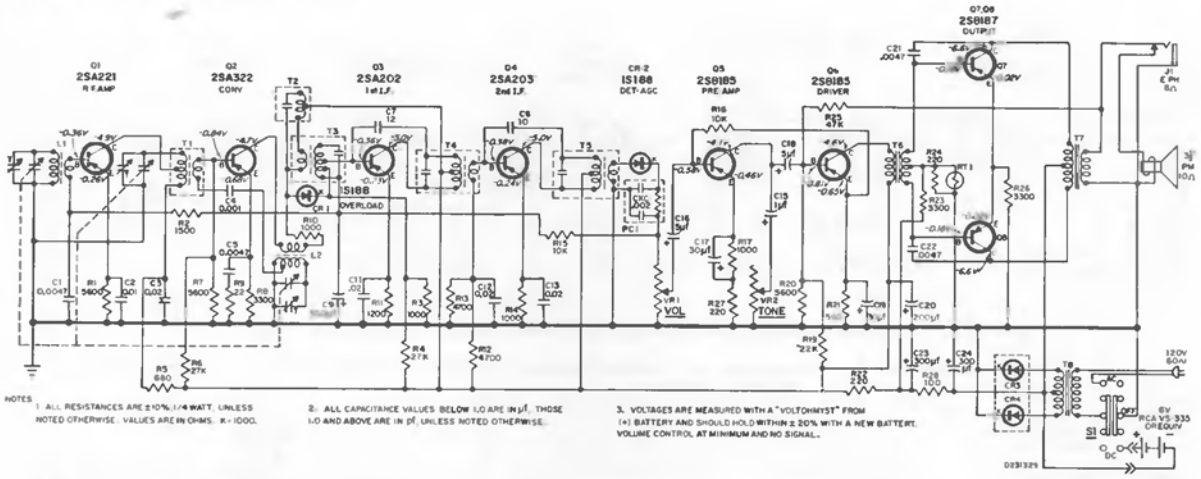


*Schematic Diagram*

IF 455 KC

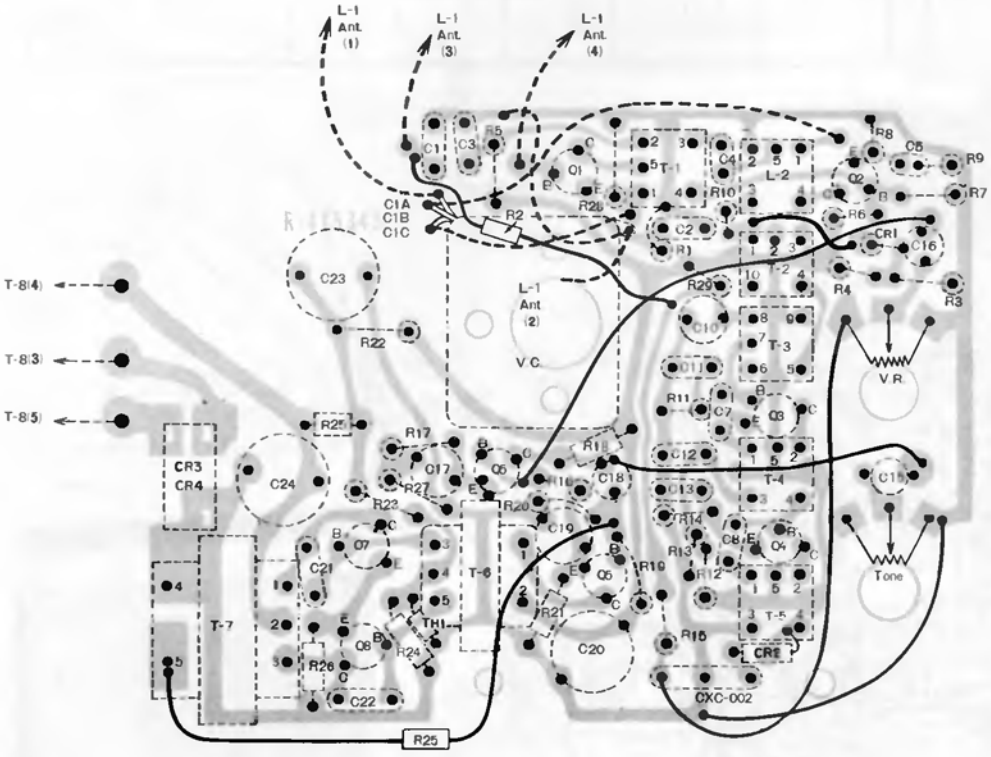


*Circuit Board (Wiring Side)*

# RCA
# RLM 68 Series
# RLM 96-K Series

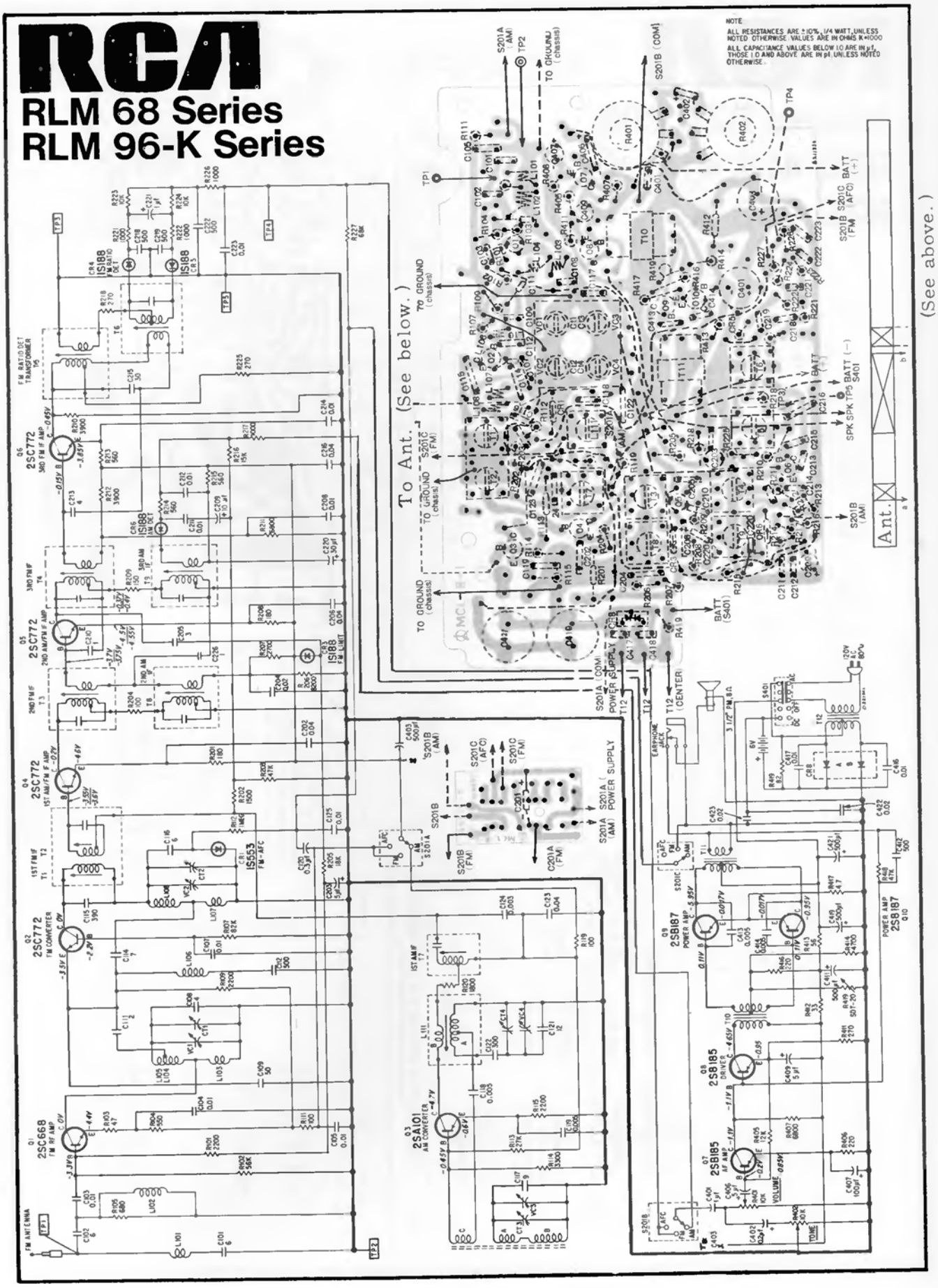

# RCA

# Models RZA 205, RZD 410, 415, RZD 943-K

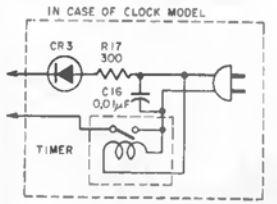


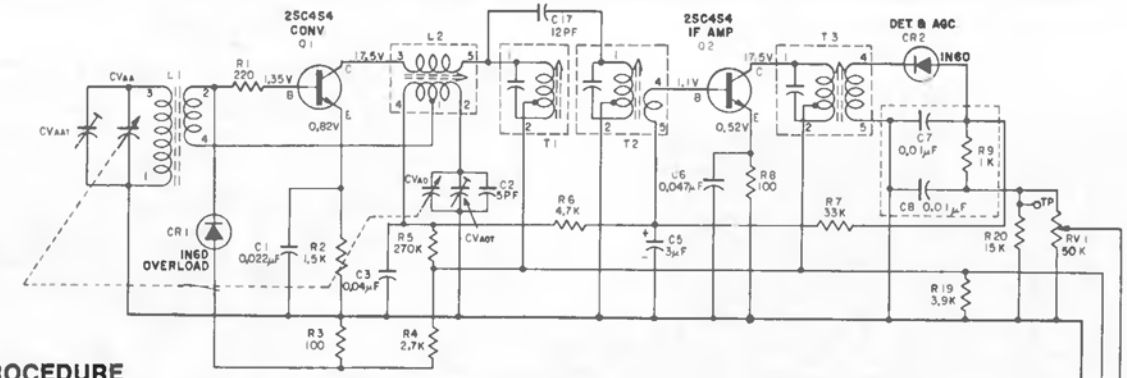


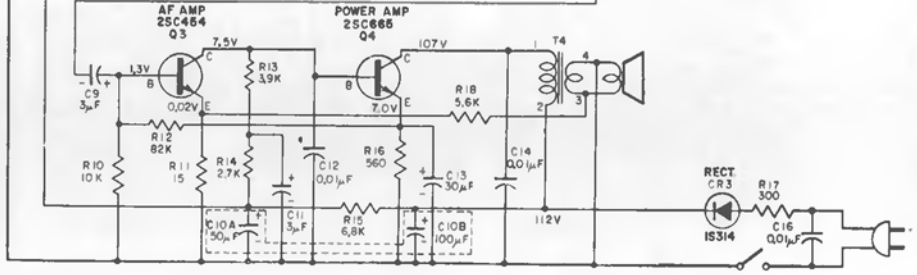


## ALIGNMENT PROCEDURE

| Step | Instrument Connections | Set Signal | Set Dial | Adjust for Max. |
|---|---|---|---|---|
| 1 | RF generator to loop or short piece of wire near antenna | 455 kc (modulated) | Gang open | T1, T2, T3 |
| 2 | | 1650 kc (modulated) | | CVAO |
| 3 | Output Meter across speaker voice coil | 525 kc (modulated) | Gang Closed | L2 |
| 4 | | 1400 kc (modulated) | 1400 kc | (Rock Gang) CVAA |
| 5 | Repeat steps as necessary to obtain maximum sensitivity and selectivity. | | | |

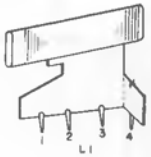







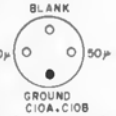




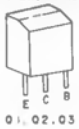


NOTES

ALL RESISTANCE VALUES IN OHM (K = 1000)

VOLTAGE MEASURED WITH VOLTOHMIST FROM GROUND LINE AT 120V AC (VOLUME CONTROL AT MINIMUM NO SIGNAL)

IN CASE OF CLOCK MODEL CONNECTION

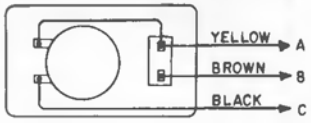


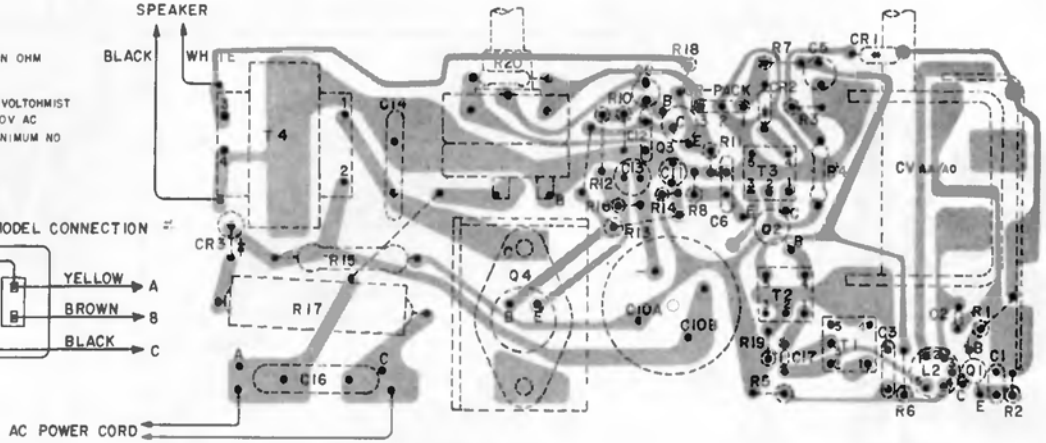


Component Locations

# RCA Model RZA 215

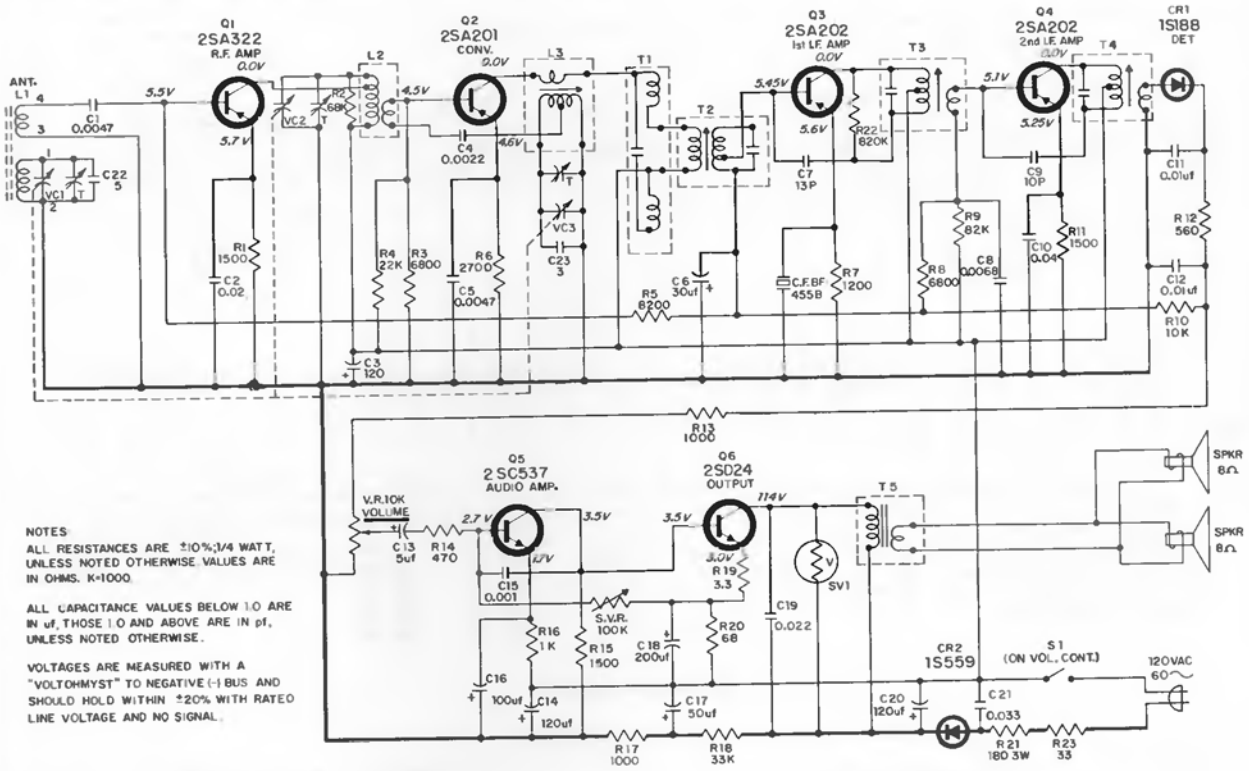


NOTES:
ALL RESISTANCES ARE ±10%;1/4 WATT, UNLESS NOTED OTHERWISE. VALUES ARE IN OHMS. K=1000.

ALL CAPACITANCE VALUES BELOW 1.0 ARE IN uf, THOSE 1.0 AND ABOVE ARE IN pf, UNLESS NOTED OTHERWISE.

VOLTAGES ARE MEASURED WITH A "VOLTOHMYST" TO NEGATIVE (-) BUS AND SHOULD HOLD WITHIN ±20% WITH RATED LINE VOLTAGE AND NO SIGNAL.

| Step | Instrument Connections | Set Signal | Set Dial | Adjust for Max. |
|---|---|---|---|---|
| 1 | RF Generator to loop or short piece of wire near antenna. | 455 kc (Modulated) | Gang Open | T3, T2, T1 (IF's) |
| 2 | | 520 kc (Modulated) | Gang Closed | L3 (Osc. Coil) |
| 3 | | 1650 kc (Modulated) | Gang Open | VC3-T (Osc. Trim) |
| 4 | Output meter across speaker voice coil. | 600 kc | 600 kc | L2 (RF Coil) |
| 5 | | 1400 kc (Modulated) | 1400 kc (Rock Gang) | VC1-T (Ant. Trim) |
| 6 | | | | VC2-T (RF Trim) |
| 7 | Repeat above as necessary to obtain maximum sensitivity and selectivity. | | | |

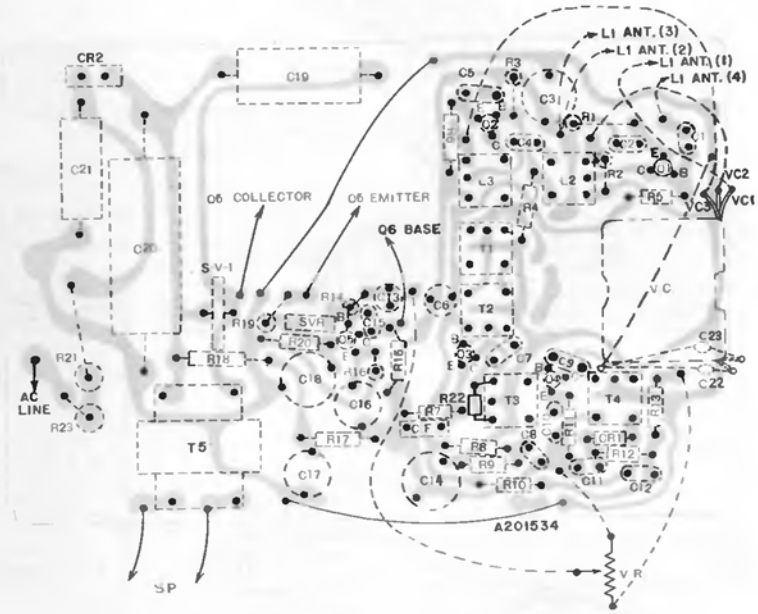


Component Location (Wiring View)

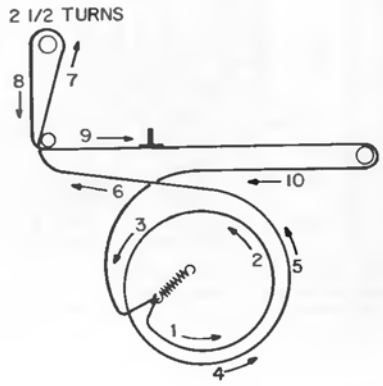

# Models RZG 111, 120

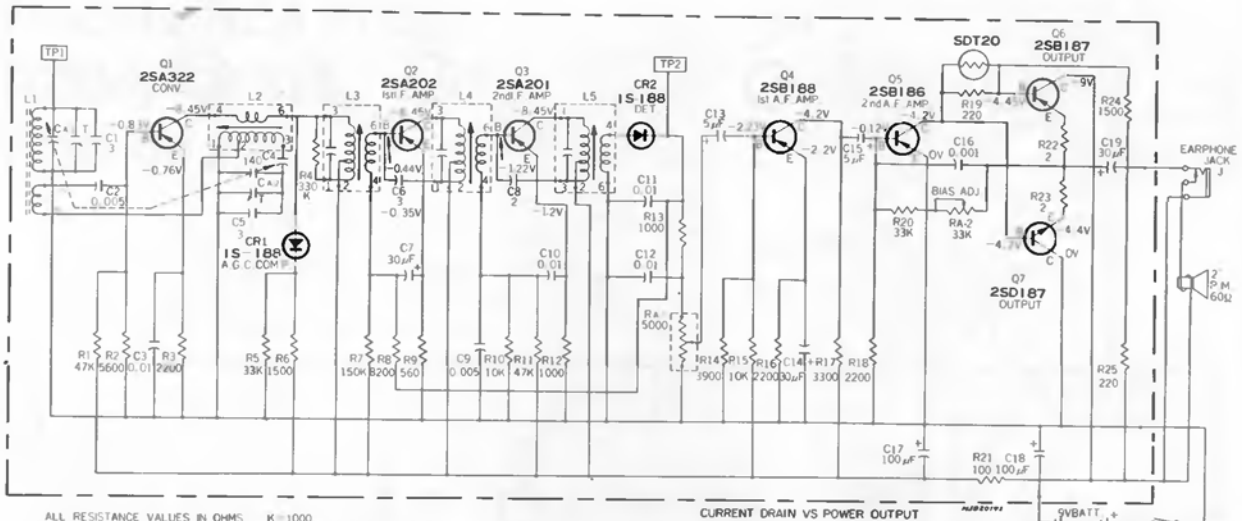


ALL RESISTANCE VALUES IN OHMS. K=1000.
ALL CAPACITANCE VALUES LESS THAN 1.0 ARE IN μF. THOSE 1.0 ABOVE ARE IN PF EXCEPT AS NOTED.
VOLTAGES ARE MEASURED WITH "VOTOHMYST" TO (+) BATTERY AND SHOULD HOLD WITHIN ±20% WITH NEW BATTERY, VOLUME CONTROL AT MINIMUM, AND NO SIGNAL.
**Q6 AND Q7 ARE A MATCHED PAIR.**


TERMINAL VIEWS

CURRENT DRAIN VS POWER OUTPUT

| ma | mw | ma | mw |
|---|---|---|---|
| 8.4 | 0 | 35.0 | 150 |
| 18.0 | 25 | 37.7 | 175 |
| 22.8 | 50 | 39.2 | 200 |
| 26.5 | 75 | 41.1 | 225 |
| 29.7 | 100 | 42.6 | 250 |
| 32.5 | 125 | 43.2 | 260 |

*Schematic Diagram*

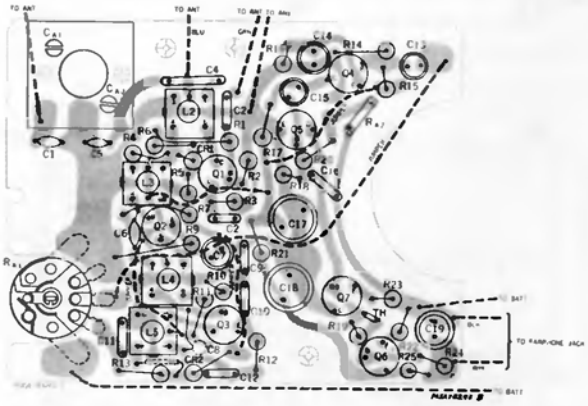

*Chassis Layout (Component View)*

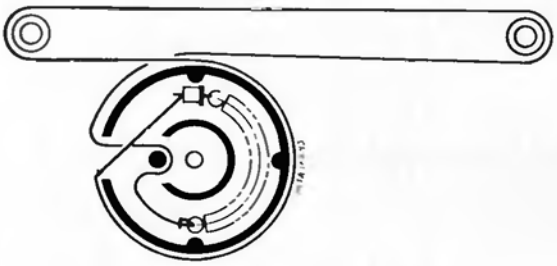

*Dial Cord Arrangement—RZG 120*

## ALIGNMENT PROCEDURE

**Instruments Required**

1. RF Signal Generator (RCA WR-50B or equivalent)
2. Electronic Voltmeter (RCA WV-500A or equivalent)

**General**

1. Signal input must be as low as possible to avoid overload and clipping. (Use highest sensitivity of output indicator.)
2. Loudness control at maximum.
3. Standard modulation is 400 cycles at 30% amplitude.

| Step | Instrument Connections | Set Signal | Set Dial | Adjust for Max. |
|---|---|---|---|---|
| 1 | RF Generator—Connected to TP1 or short piece of wire near antenna<br>E.V.M.—connected to TP 2 | 455 kc | Gang Closed | L3 (1st IF) |
| 2 | | | | L4 (2nd IF) |
| 3 | | | | L5 (3rd IF) |
| 4 | | Repeat Steps 1 through 3 to obtain maximum sensitivity | | |
| 5 | | 525 kc | Gang Closed | L2 (Osc. coil) |
| 6 | | 1650 kc | Gang Open | CA 2 T (Osc. trim) |
| 7 | | 1400 kc | 1400 kc Rock gang | CA 1 T (Ant. trim) |
| 8 | Repeat Steps 5 through 8 to obtain best tracking and selectivity | | | |

# RCA Model RZG 125

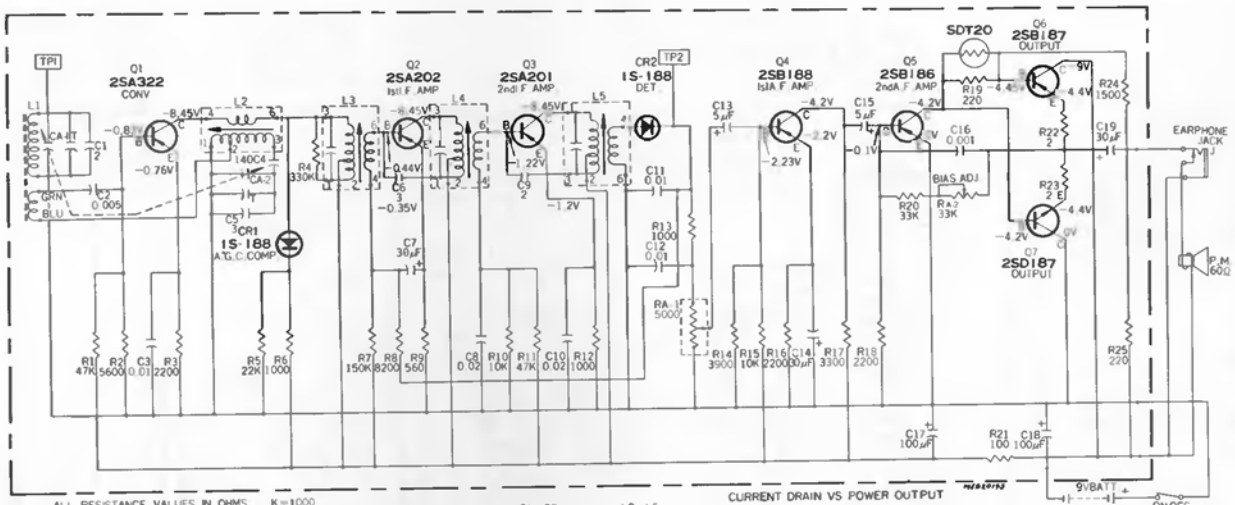


ALL RESISTANCE VALUES IN OHMS K=1000
ALL CAPACITANCE VALUES LESS THAN 1.0 ARE IN μF THOSE 1.0 ABOVE ARE IN PF EXCEPT AS NOTED
VOLTAGES ARE MEASURED WITH "VOLTOHMYST" TO (+) BATTERY. AND SHOULD HOLD WITHIN ±20% WITH NEW BATTERY. VOLUME CONTROL AT MINIMUM. AND NO SIGNAL.
Q6 AND Q7 ARE A MATCHED PAIR.

Q1–Q7


L2–L5




TERMINAL VIEWS

CURRENT DRAIN VS POWER OUTPUT

| ma | mw | ma | mw |
|---|---|---|---|
| 8.4 | 0 | 35.0 | 150 |
| 18.0 | 25 | 37.7 | 175 |
| 22.8 | 50 | 39.2 | 200 |
| 26.5 | 75 | 41.1 | 225 |
| 29.7 | 100 | 42.6 | 250 |
| 32.5 | 125 | 43.2 | 260 |

*Schematic Diagram*

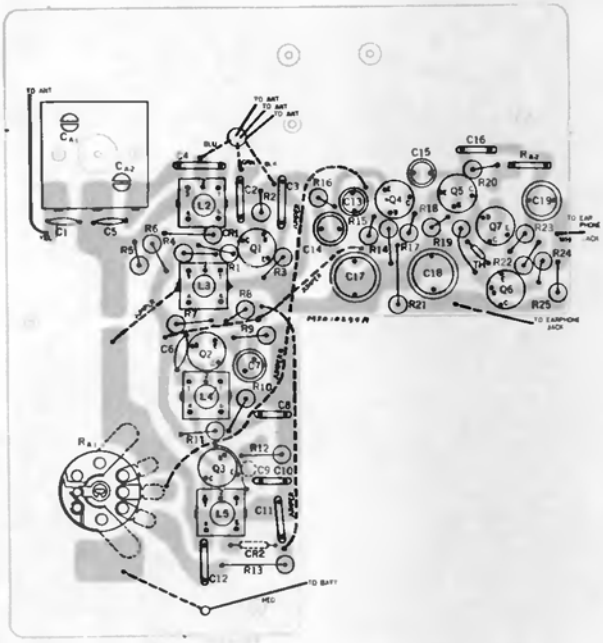

*Component Locations (Component View)*

## ALIGNMENT PROCEDURE

**Instruments Required**

1. RF Signal Generator (RCA WR-50B or equivalent)
2. Electronic Voltmeter (RCA WV-500A or equivalent)

**General**

1. Signal input must be as low as possible to avoid overload and clipping. (Use highest sensitivity of output indicator.)
2. Loudness control at maximum.
3. Standard modulation is 400 cycles at 30% amplitude.

| Step | Instrument Connections | Set Signal | Set Dial | Adjust for Max. |
|---|---|---|---|---|
| 1 | RF Generator—Connected to TP1 or short piece of wire near antenna<br>E.V.M.—connected to TP 2 | 455 kc | Gang Closed | L3 (1st IF) |
| 2 | | | | L4 (2nd IF) |
| 3 | | | | L5 (3rd IF) |
| 4 | | Repeat Steps 1 through 3 to obtain maximum sensitivity | | |
| 5 | | 525 kc | Gang Closed | L2 (Osc. coil) |
| 6 | | 1650 kc | Gang Open | CA 2 T (Osc. trim) |
| 7 | | 1400 kc | 1400 kc Rocg gang | CA 1 T (Ant. trim) |
| 8 | Repeat Steps 5 through 8 to obtain best tracking and selectivity | | | |

# RCA Model RZM 990-K

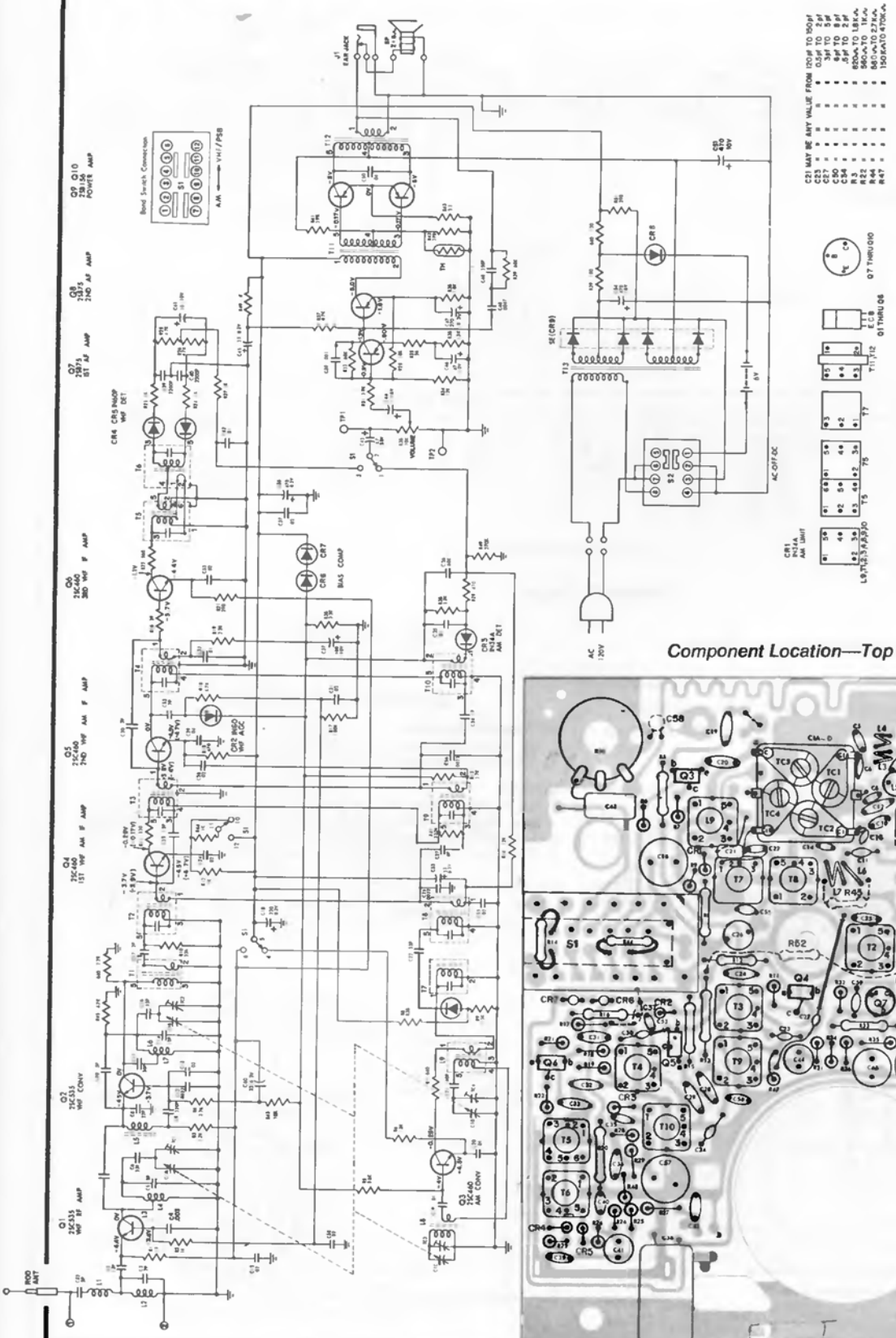

# RCA Models

VJP 12 Series,
VJP 16 Series,
VJP 88-K Series,
VLP 12 Series,
VMP 12 Series

Chassis RS-225B,
RS-250A

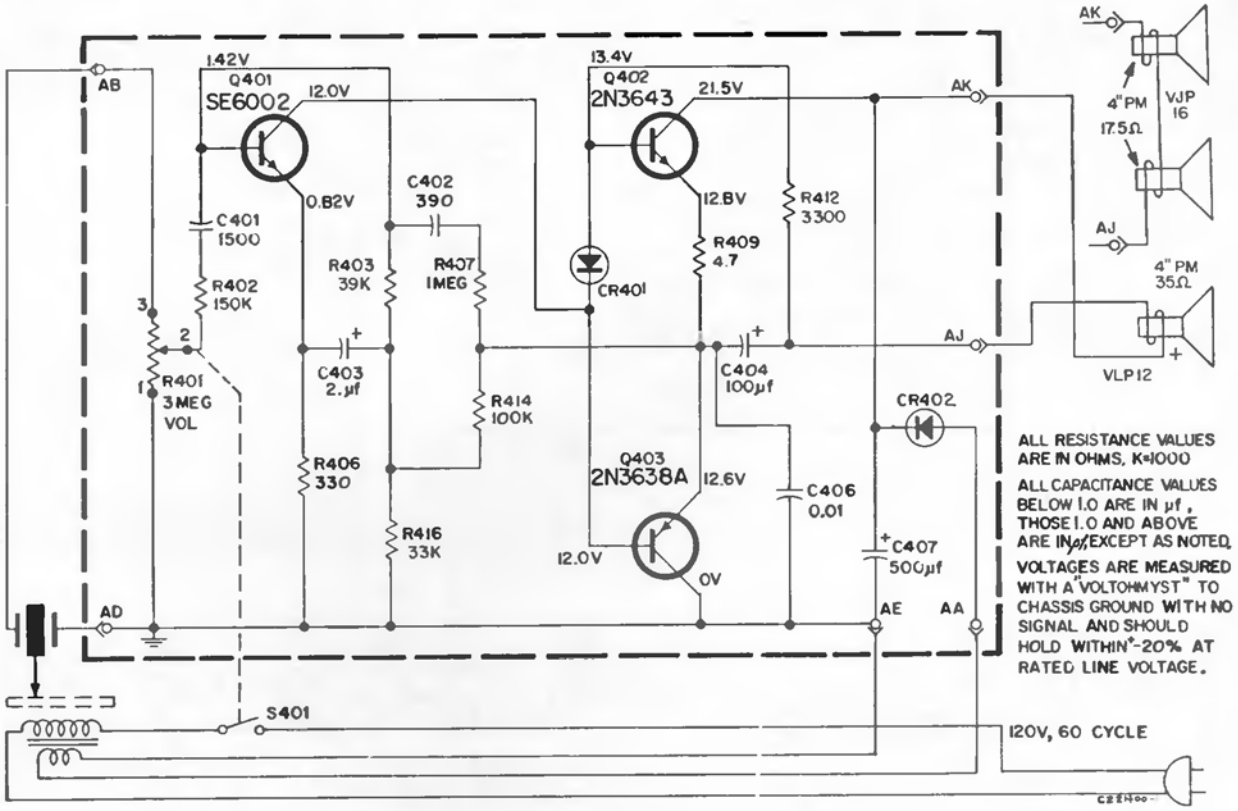


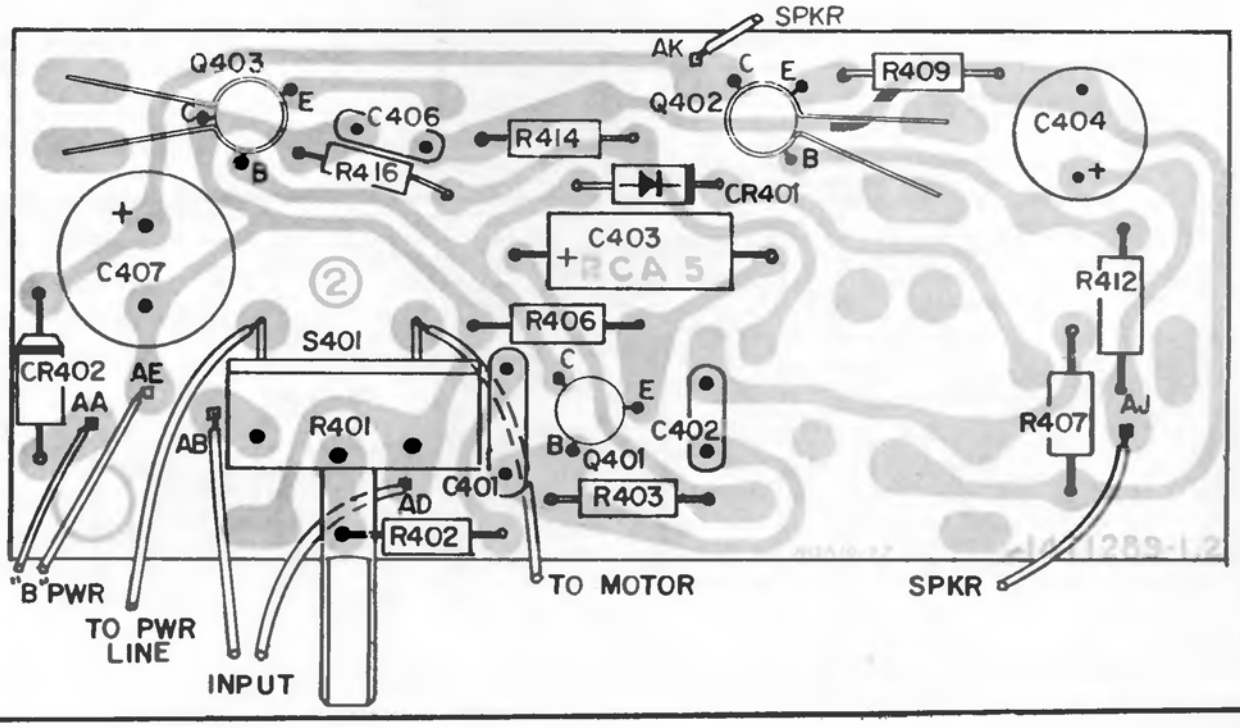

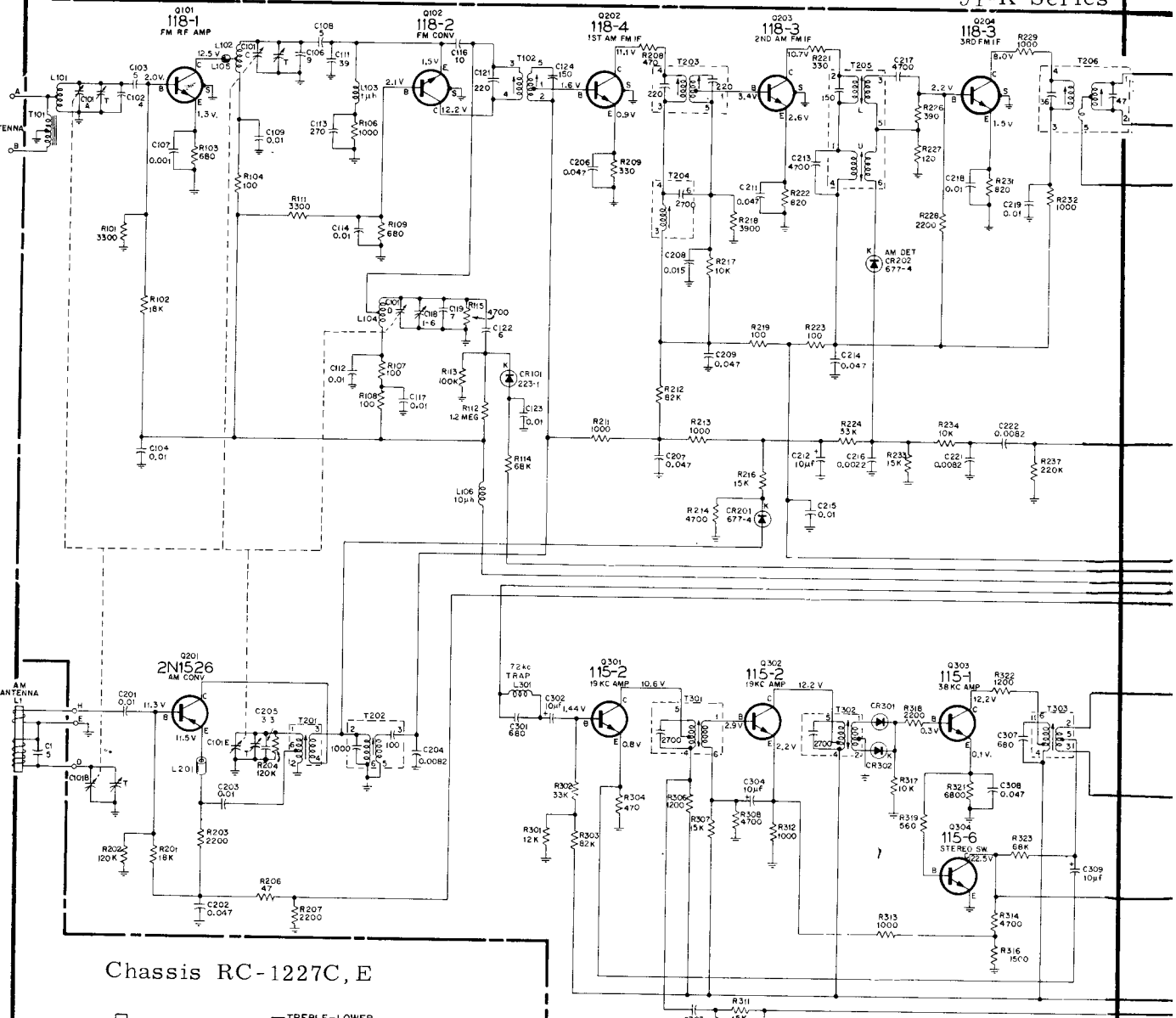


Chassis RC-1227C, E

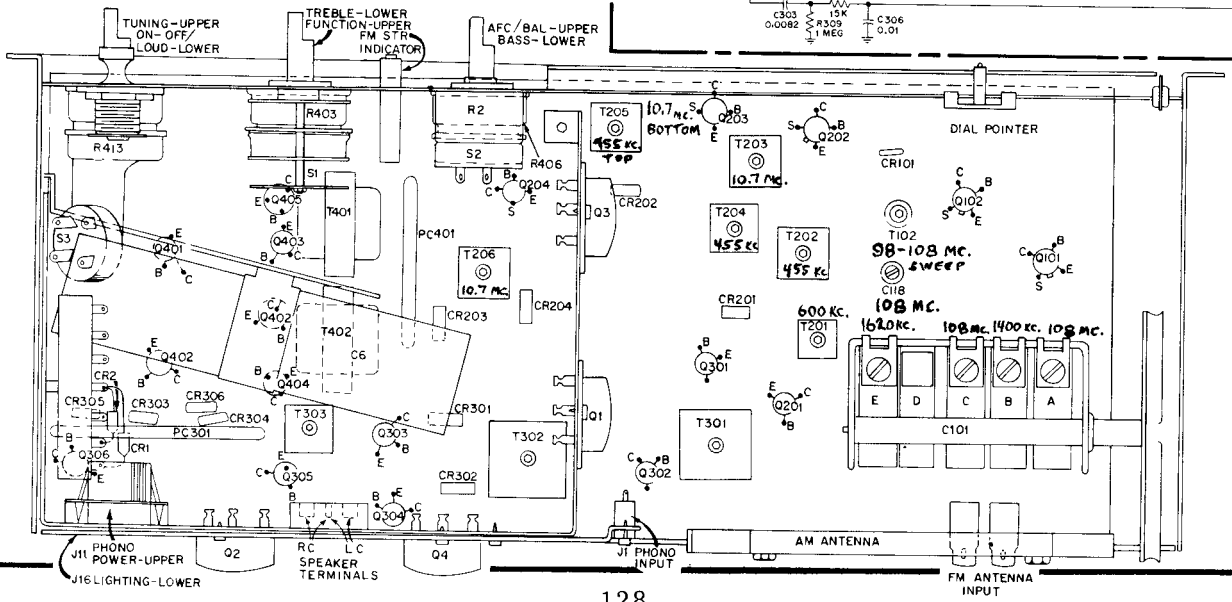




(Continued on next page.)

RCA Models VJT 16, 18, 23, 24, 25, 29, 30, 31, 33, 35, 37, 84-K, 85-K, 89-K, 90-K, 91-K Series

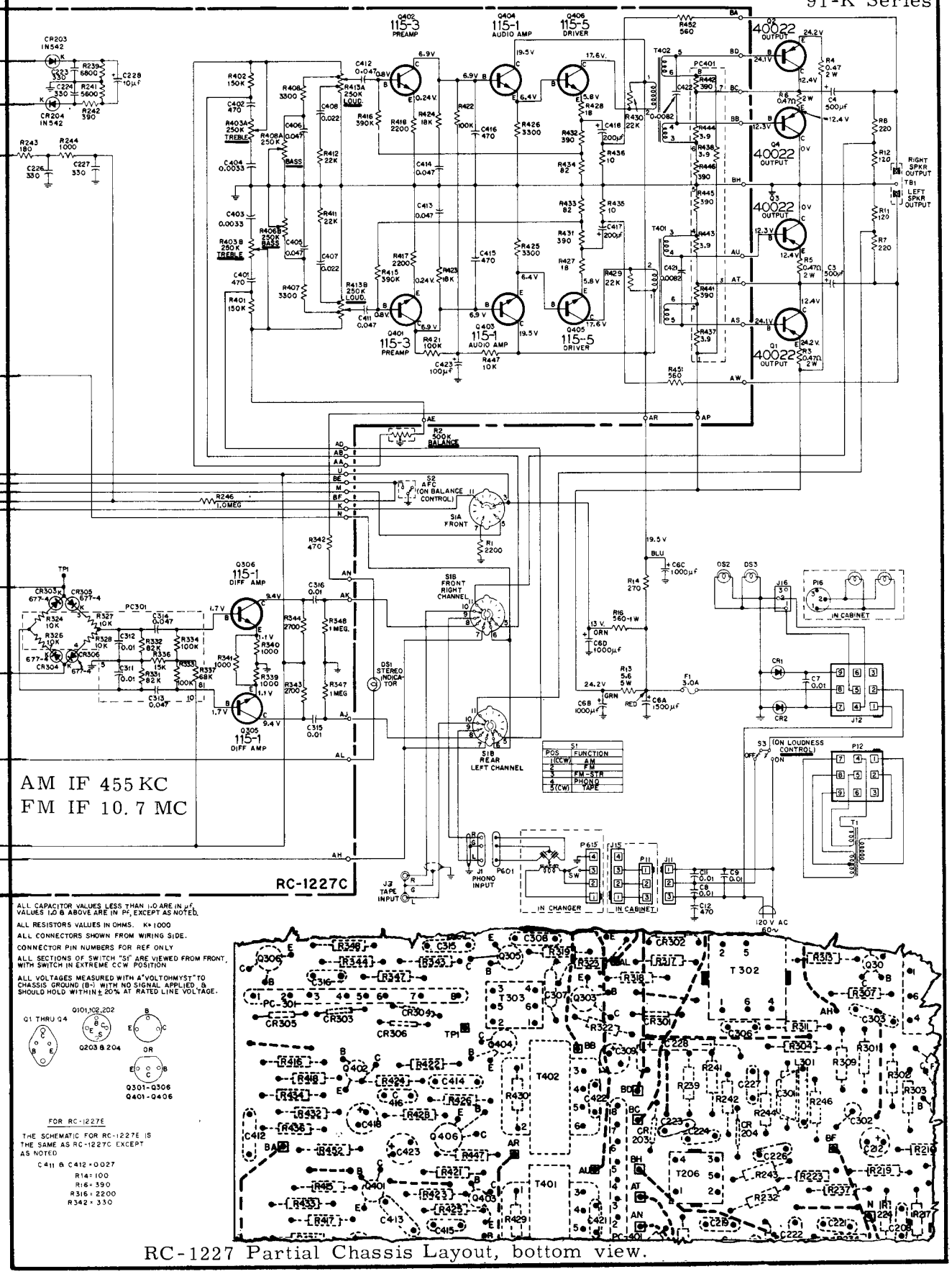


RC-1227 Partial Chassis Layout, bottom view.

(Continued from preceding page.)

# VLP 20 Series VMP 20 Series

## Amplifier Chassis RS-249A

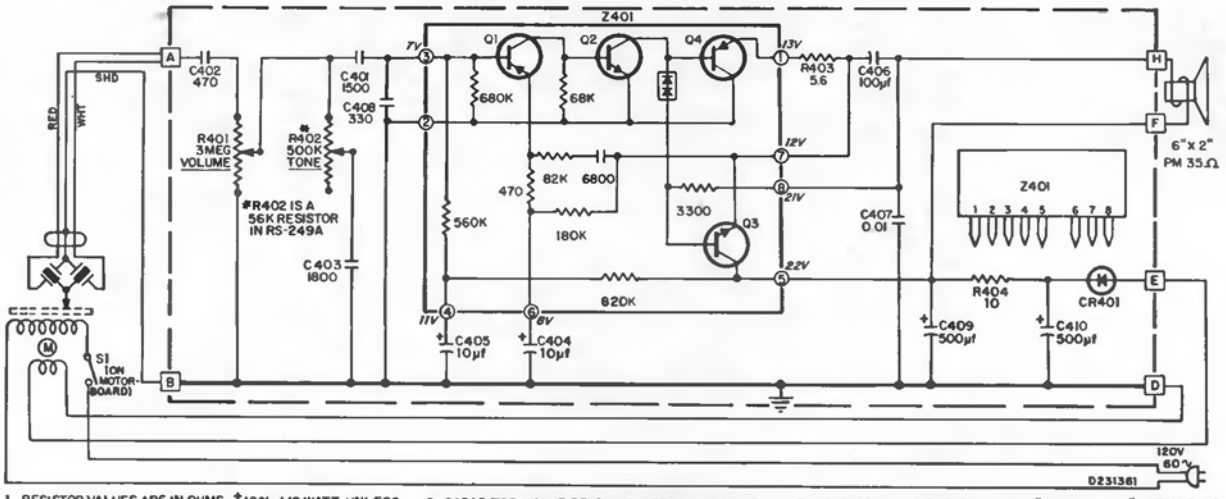


1. RESISTOR VALUES ARE IN OHMS, ±10%, 1/2 WATT UNLESS NOTED OTHERWISE. K = 1000
2. CAPACITOR VALUE BELOW 1.0 ARE IN µf, THOSE 1.0 AND ABOVE ARE IN pf UNLESS OTHERWISE NOTED
3. VOLTAGES ARE MEASURED WITH A "VOLTOHMYST" AND SHOULD HOLD WITHIN ± 20% WITH NO SIGNAL APPLIED AT RATED LINE VOLTAGE

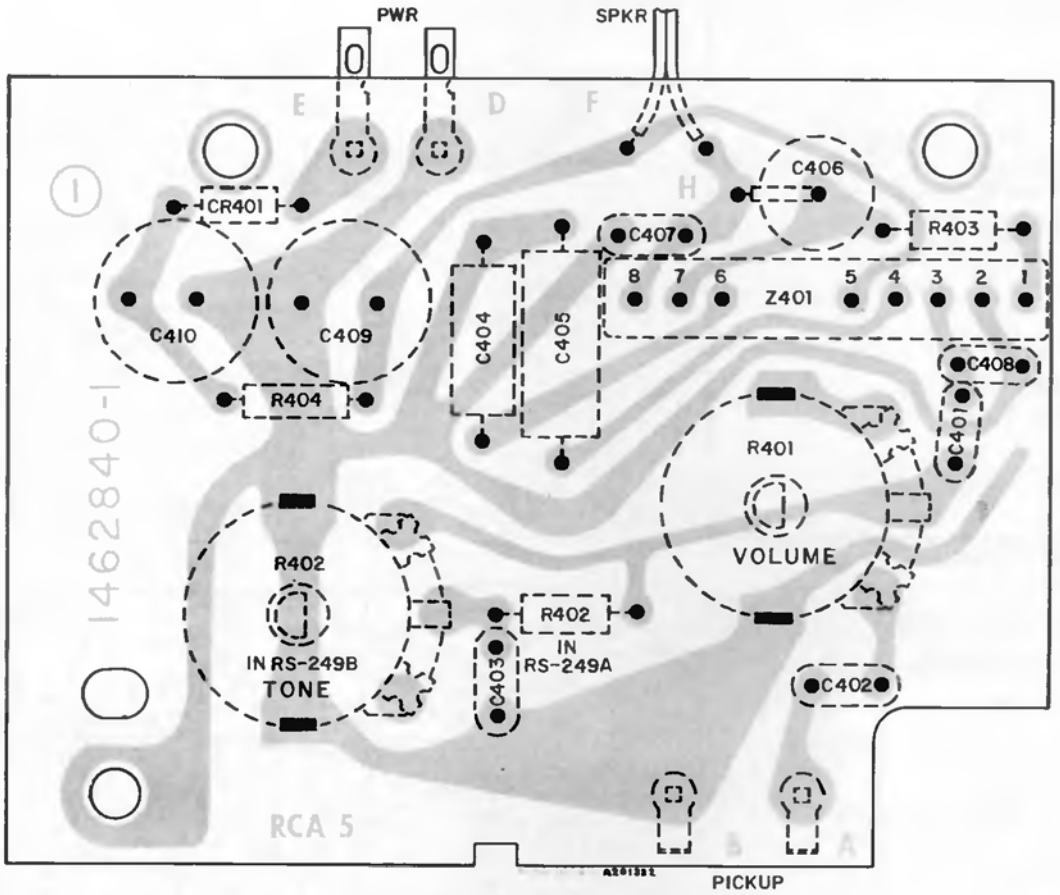


*Component Locations (Wiring Side)*

# RCA Models VLP 34, 36, 39
# Models VMP 34, 38, 47

**Amplifier Chassis**
**RS-243A**
**RS-245A**

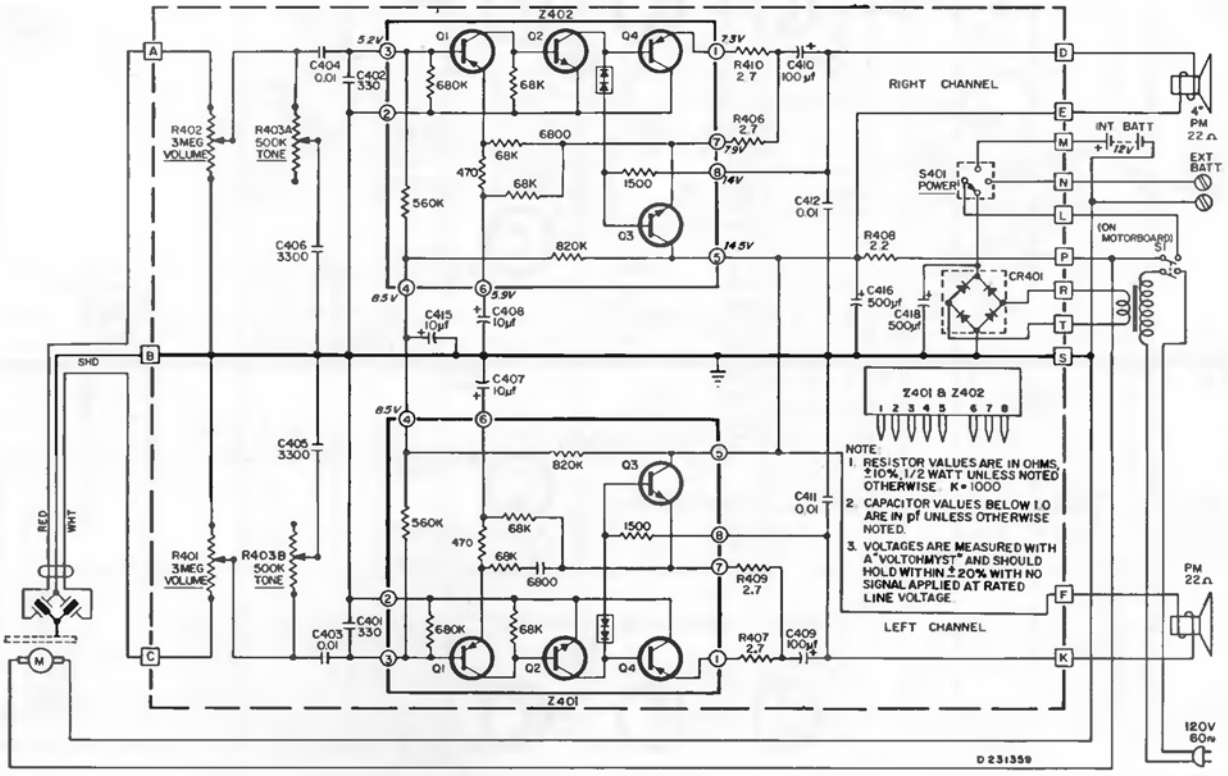


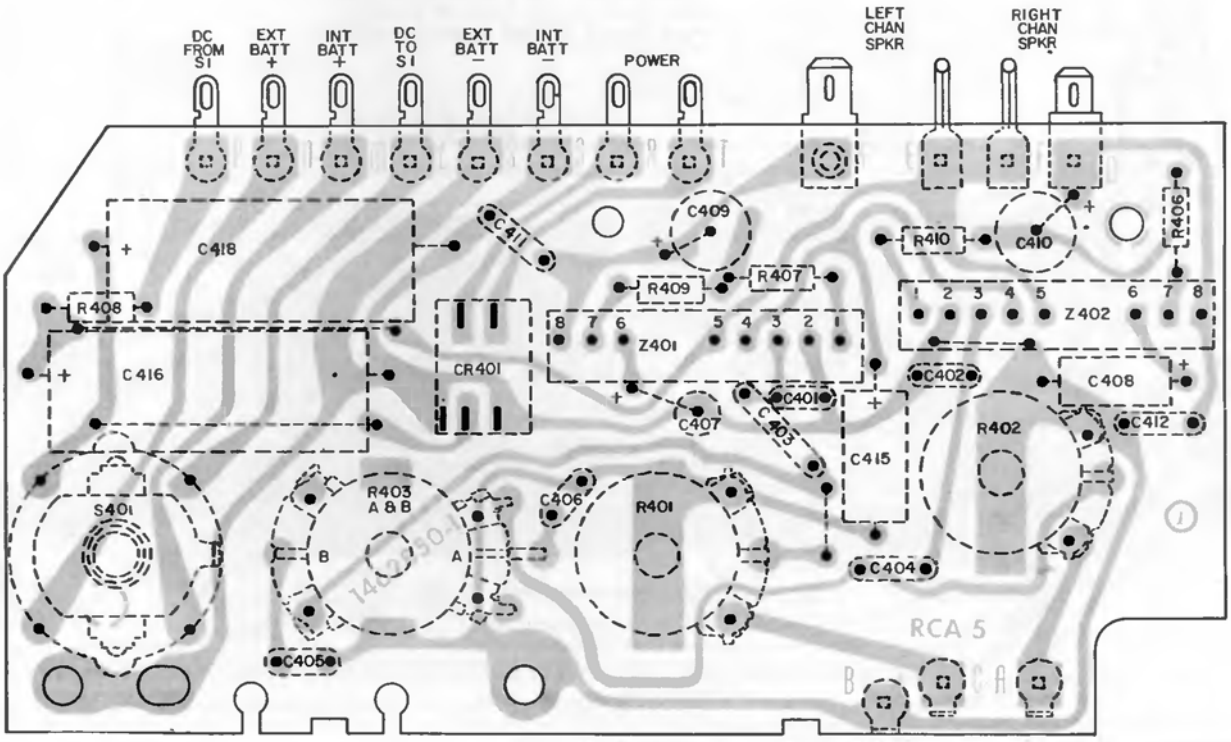

# RCA Models VME 11, 12 Amplifier Chassis RS-256A

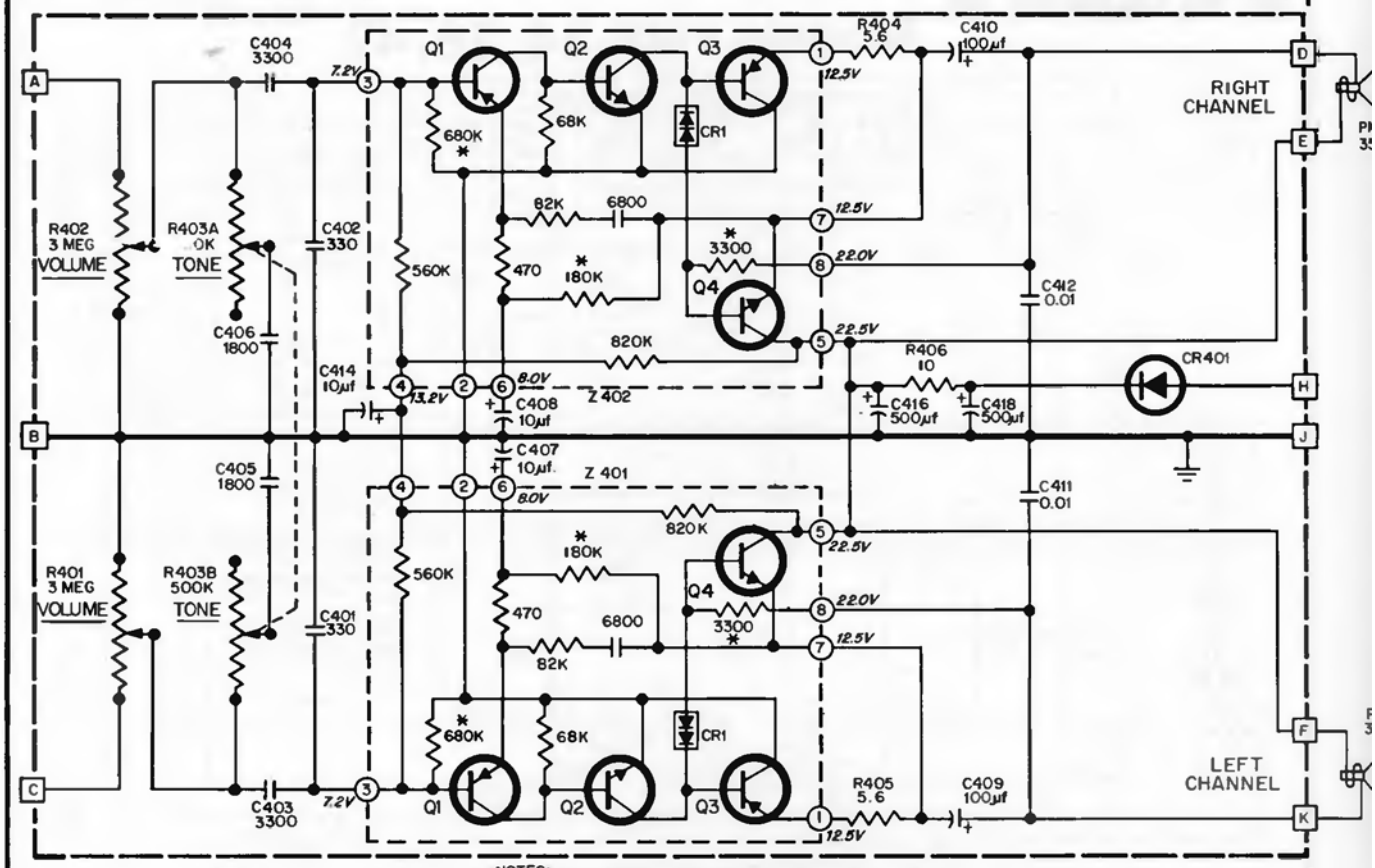


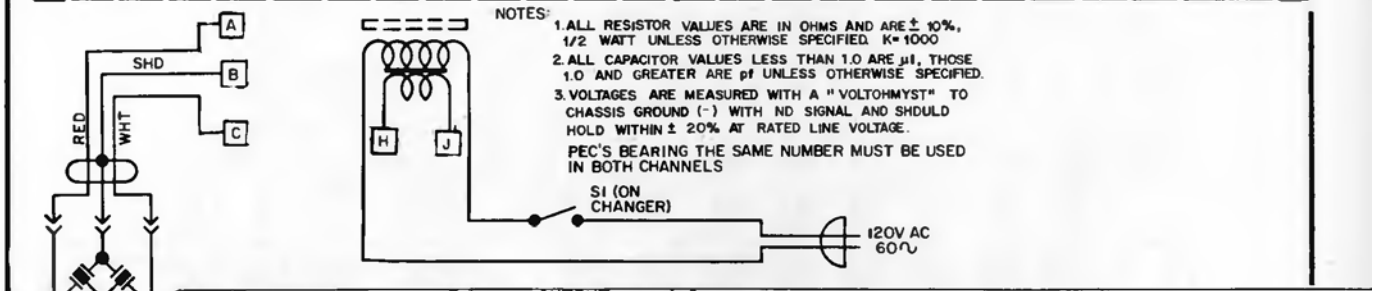


NOTES:

1. ALL RESISTOR VALUES ARE IN OHMS AND ARE ± 10%, 1/2 WATT UNLESS OTHERWISE SPECIFIED. K= 1000
2. ALL CAPACITOR VALUES LESS THAN 1.0 ARE µf, THOSE 1.0 AND GREATER ARE pf UNLESS OTHERWISE SPECIFIED.
3. VOLTAGES ARE MEASURED WITH A "VOLTOHMYST" TO CHASSIS GROUND (-) WITH NO SIGNAL AND SHOULD HOLD WITHIN ± 20% AT RATED LINE VOLTAGE.

PEC'S BEARING THE SAME NUMBER MUST BE USED IN BOTH CHANNELS

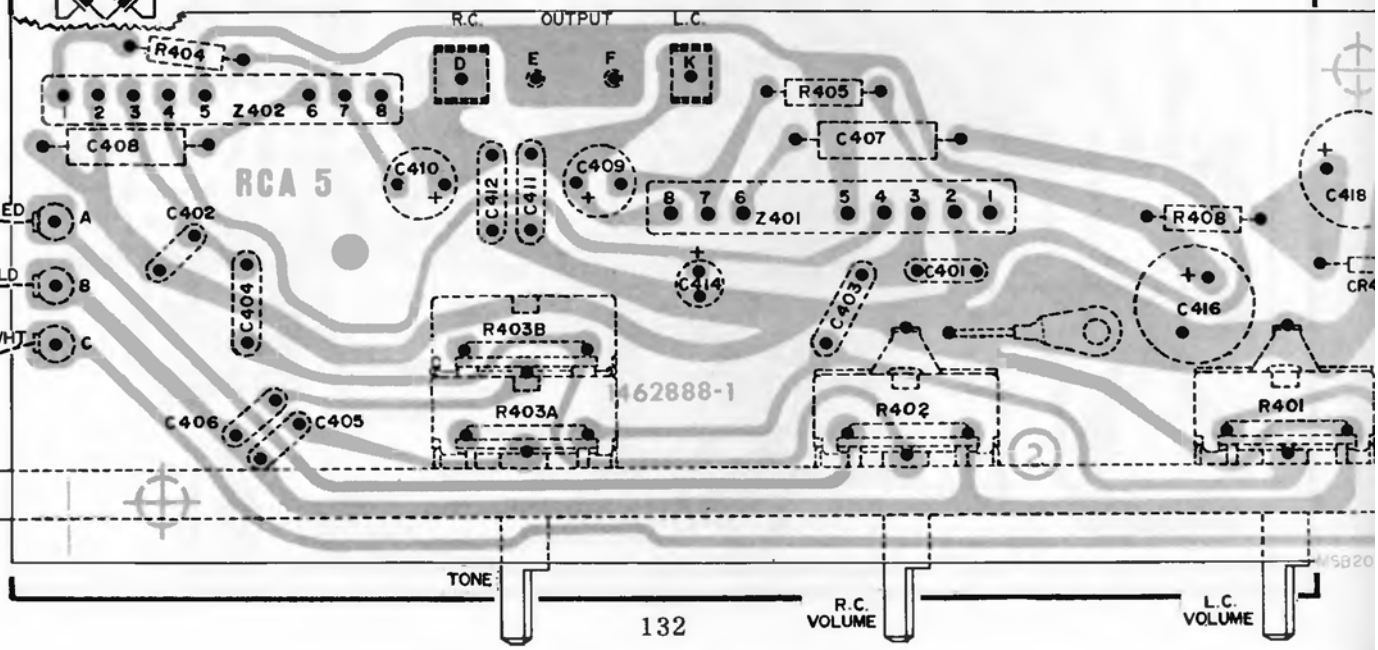

# RCA Model VMP 14

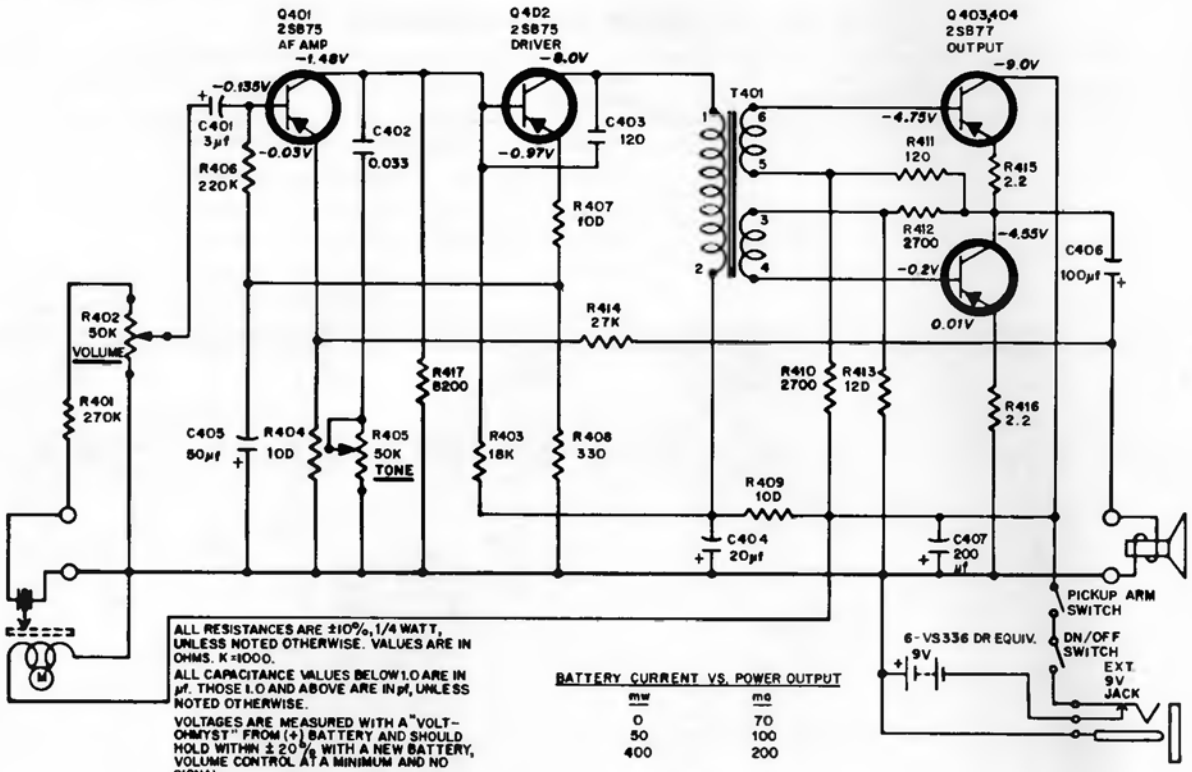


ALL RESISTANCES ARE ±10%, 1/4 WATT, UNLESS NOTED OTHERWISE. VALUES ARE IN OHMS. K=1000.

ALL CAPACITANCE VALUES BELOW 1.0 ARE IN μf. THOSE 1.0 AND ABOVE ARE IN pf, UNLESS NOTED OTHERWISE.

VOLTAGES ARE MEASURED WITH A "VOLT-OHMYST" FROM (+) BATTERY AND SHOULD HOLD WITHIN ± 20% WITH A NEW BATTERY, VOLUME CONTROL AT A MINIMUM AND NO SIGNAL.

BATTERY CURRENT VS. POWER OUTPUT

| mw | ma |
|---|---|
| 0 | 70 |
| 50 | 100 |
| 400 | 200 |

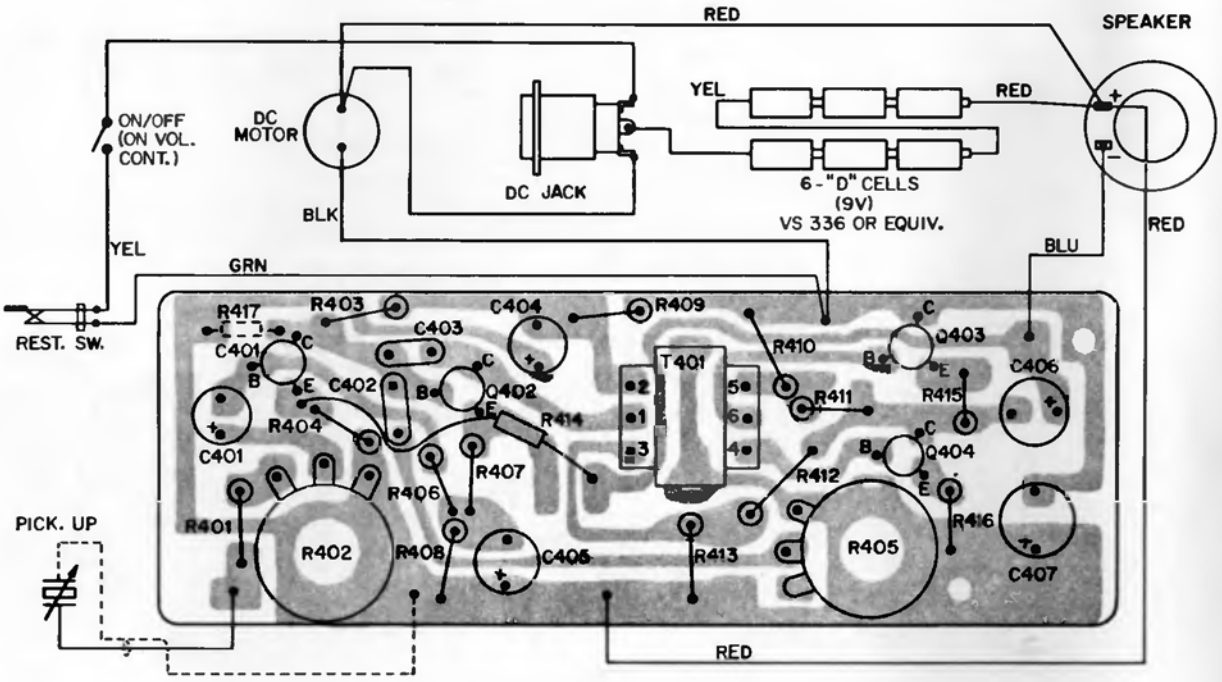


*Chassis Layout*

# Models VMT 1, 2 Series

## Radio Chassis RC-1227K

### MODEL TO CHASSIS CROSS REFERENCE

| MODEL | TUNER, AMPLIFIER | RECORD CHANGER | Speakers |
|---|---|---|---|
| VMT 10 | RC1227K | RP-232-5 | 2— 9" x 6", 2—3½" Tweeters |
| VMT 13 | RC1227K | RP-232-5 | 2— 9" x 6", 2—3½" Tweeters |
| VMT 14 | RC1227K | RP-232-5 | 2— 9" x 6", 2—3½" Tweeters |
| VMT 15 | RC1227K | RP-232-5 | 2— 9" x 6", 2—3½" Tweeters |
| VMT 25 | RC1227K | RP-232-9 | 2—12" x 8", 2—3½" Middlers, 2—3½" Tweeters |
| VMT 27 | RC1227K | RP-232-9 | 2—12" x 8", 2—3½" Middlers, 2—3½" Tweeters |

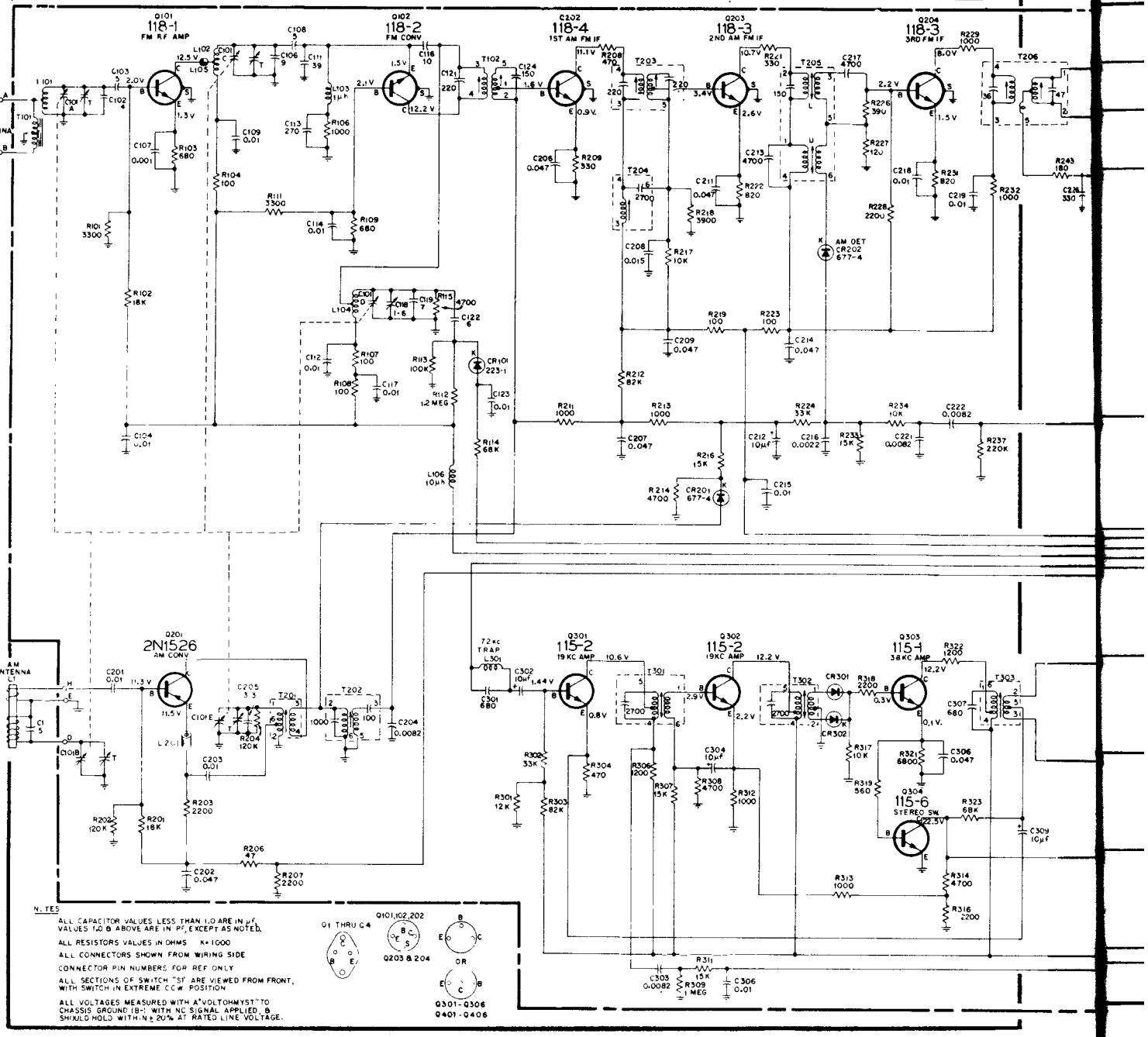




(Continued on next two pages.)

# Models VMT 1, 2 Series

Chassis RC-1227K

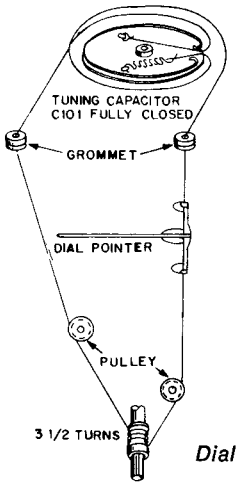


*Dial Cord Arrangement*

**AUDIO FREQUENCY RESPONSE**

VMT 10, 13, 14, 15 .....60-20,000 cycles/sec
VMT 25, 27 .....50-20,000 cycles/sec

**POWER SUPPLY RATING**

VMT 10, 13, 14, 15, 25, 27 .....12 volts, 60 cycles
Power Consumption .....55 watts

| FREQUENCIES | Tuning | IF |
|---|---|---|
| AM | 540-1620 kc/s | 455 kc/s |
| FM | 88-108 mc/s | 10.7 mc/s |

(Continued from preceding page and on next page.)

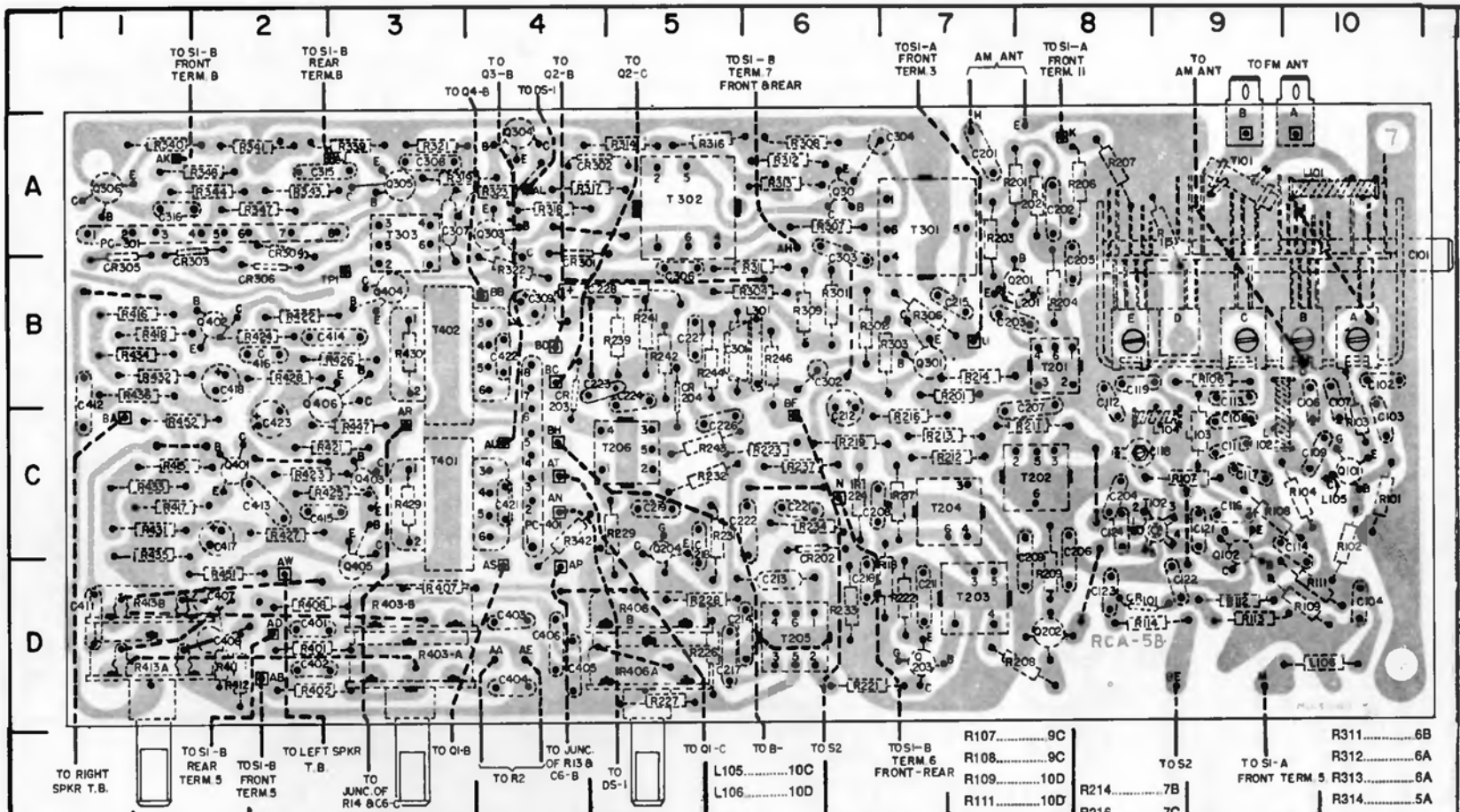


| | | | | | | | | | | | | | | | | | | | | | | | |
|---|---|---|---|---|---|---|---|---|---|---|---|---|---|---|---|---|---|---|---|---|---|---|---|
| C101 9B | C121 9C | C213 6D | C302 6B | C407 2D | CR201 7B | L105 10C | Q303 4A | R107 9C | R214 7B | R237 6C | R311 6B | R402 2D | T101 9A |
| C102 10B | C122 9D | C214 5D | C303 6B | C408 2D | CR202 6C | L106 10D | Q304 4A | R108 9C | R216 7C | R239 5B | R312 6A | R403 3D | T102 8C |
| C103 10C | C123 8D | C215 7B | C304 6A | C411 1D | CR203 4B | L201 7B | Q305 3A | R109 10D | R217 7C | R241 5B | R313 6A | R406 5D | T201 8B |
| C104 10D | C124 8C | C216 6D | C306 5B | C412 1B | CR204 5B | L301 6B | Q306 1A | R111 10D | R218 6D | R242 5B | R314 5A | R407 3D | T202 8C |
| C106 10B | C201 7A | C217 5D | C307 3A | C413 2C | CR301 4A | PC301 2A | Q401 2C | R112 9D | R219 6C | R243 5C | R316 5A | R406 2D | T203 7D |
| C107 10B | C202 6A | C218 5C | C308 3A | C414 2B | CR302 4A | PC401 4C | Q402 2B | R113 9D | R221 6D | R244 5B | R317 4A | R411 2D | T204 7C |
| C108 9C | C203 7B | C219 5C | C309 4B | C415 2C | CR303 1A | Q101 10C | Q403 3C | R114 8D | R222 7D | R246 6B | R318 4A | R412 2D | T205 6D |
| C109 10C | C204 8C | C221 6C | C315 2A | C418 2B | CR304 2A | Q102 9C | Q404 3B | R115 9A | R223 6C | | R319 3A | R413 1D | T206 5C |
| C111 9C | C206 8B | C222 5C | C316 1A | C417 2C | CR305 1B | Q201 7B | Q405 3D | R201 7B | R224 6C | R301 6B | R321 3A | R415 1C | T301 7A |
| C112 8C | C206 8C | C223 4B | C401 2D | C418 2B | CR306 2B | Q202 6D | Q406 2B | R202 6A | R226 5D | R302 6B | R322 4B | R416 1B | T302 5A |
| C113 9B | C207 8C | C224 5B | C402 2D | C421 4C | L101 10A | Q203 7D | R101 10C | R203 7A | R227 5D | R303 6B | R323 4A | R417 1C | T303 3A |
| C114 9C | C208 6C | C226 5C | C403 4D | C422 4B | L102 9C | Q204 5C | R102 10C | R204 8B | R228 5D | R304 6B | R339 3A | R416 1B | T401 3C |
| C116 9C | C209 8D | C227 5B | C404 4D | C423 2C | L103 9C | Q301 7B | R103 10C | R206 6A | R229 4C | R306 7B | R340 1A | R421 2C | T402 3B |
| C117 9C | C211 7D | C228 5B | C405 4D | CR101 8D | L104 8C | Q302 6A | R104 10C | R207 6A | R231 5C | R307 6A | R341 2A | R422 2B | |
| C118 8C | C212 6C | C301 5B | C408 4D | | | | R106 9B | R208 7D | R232 5C | R308 6A | R342 4C | R423 2C | |
| C119 8B | | | | | | | | R209 8D | R233 6D | R309 6B | R343 2A | R424 2B | |
| | | | | | | | | R211 8C | R234 6C | | R344 2A | R425 2C | |
| | | | | | | | | R212 7C | | | R347 2A | R426 3B | |
| | | | | | | | | R213 7C | | | R348 2A | R427 2C | |
| | | | | | | | | | | | R401 2D | R428 2B | |
| | | | | | | | | | | | | R429 3C | |
| | | | | | | | | | | | | R430 3B | |
| | | | | | | | | | | | | R431 1C | |
| | | | | | | | | | | | | R432 1B | |
| | | | | | | | | | | | | R433 1C | |
| | | | | | | | | | | | | R434 1B | |
| | | | | | | | | | | | | R435 1C | |
| | | | | | | | | | | | | R436 1B | |
| | | | | | | | | | | | | R447 2C | |
| | | | | | | | | | | | | R451 2D | |
| | | | | | | | | | | | | R452 1C | |

| Terminals | | | | | | | | | | |
|---|---|---|---|---|---|---|---|---|---|---|
| A 9A | D 10B | M 9D | AA 4D | AH 6B | AN 4C | AT 4C | BA 1C | BE 9D | TP1 3B | |
| B 9A | E 6A | N 6C | AB 2D | AJ 2A | AP 4D | AU 4C | BB 4B | BF 6C | | |
| | H 7A | U 7B | AD 2D | AK 1A | AR 3C | AW 2D | BC 4B | BH 4C | | |
| | K 8A | | AE 4D | AL 4A | AS 4D | | BD 4B | | | |

*Component Location Guide*

SEARS | Silvertone CHASSIS 132.42701
MODEL 2063, 2064, 2065

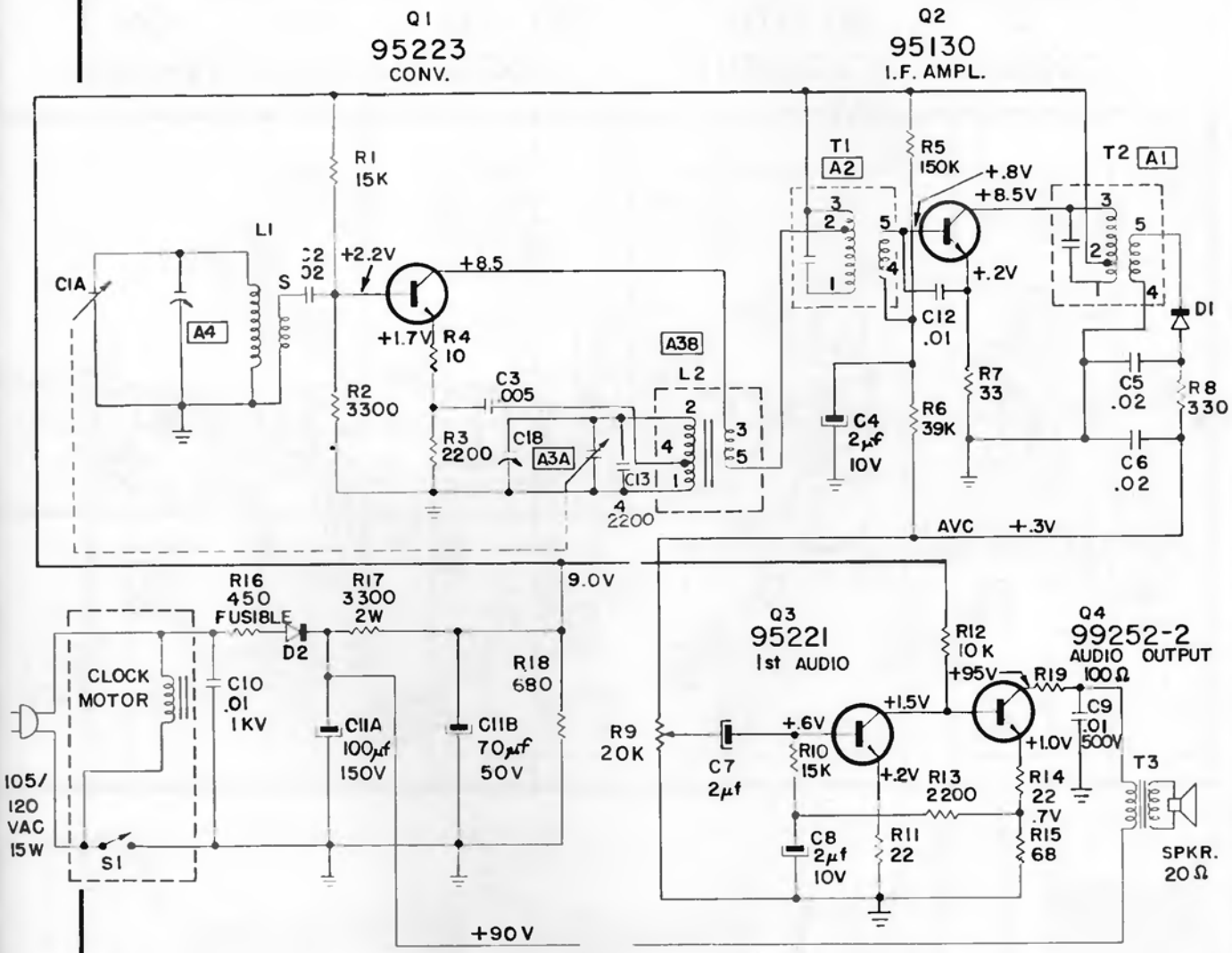


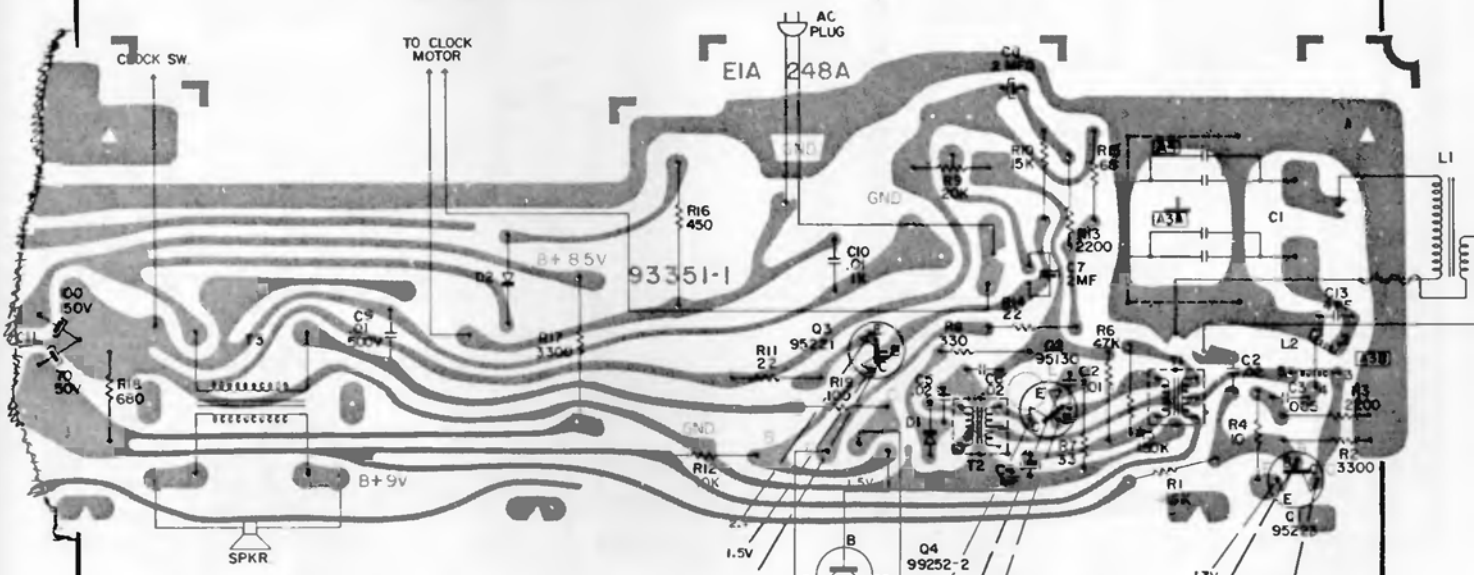


CIRCUIT BOARD DIAGRAM
(Bottom View)

SEARS

CHASSIS 132.41501
MODELS 2230, 2231, 2232

(Continued on next page.)

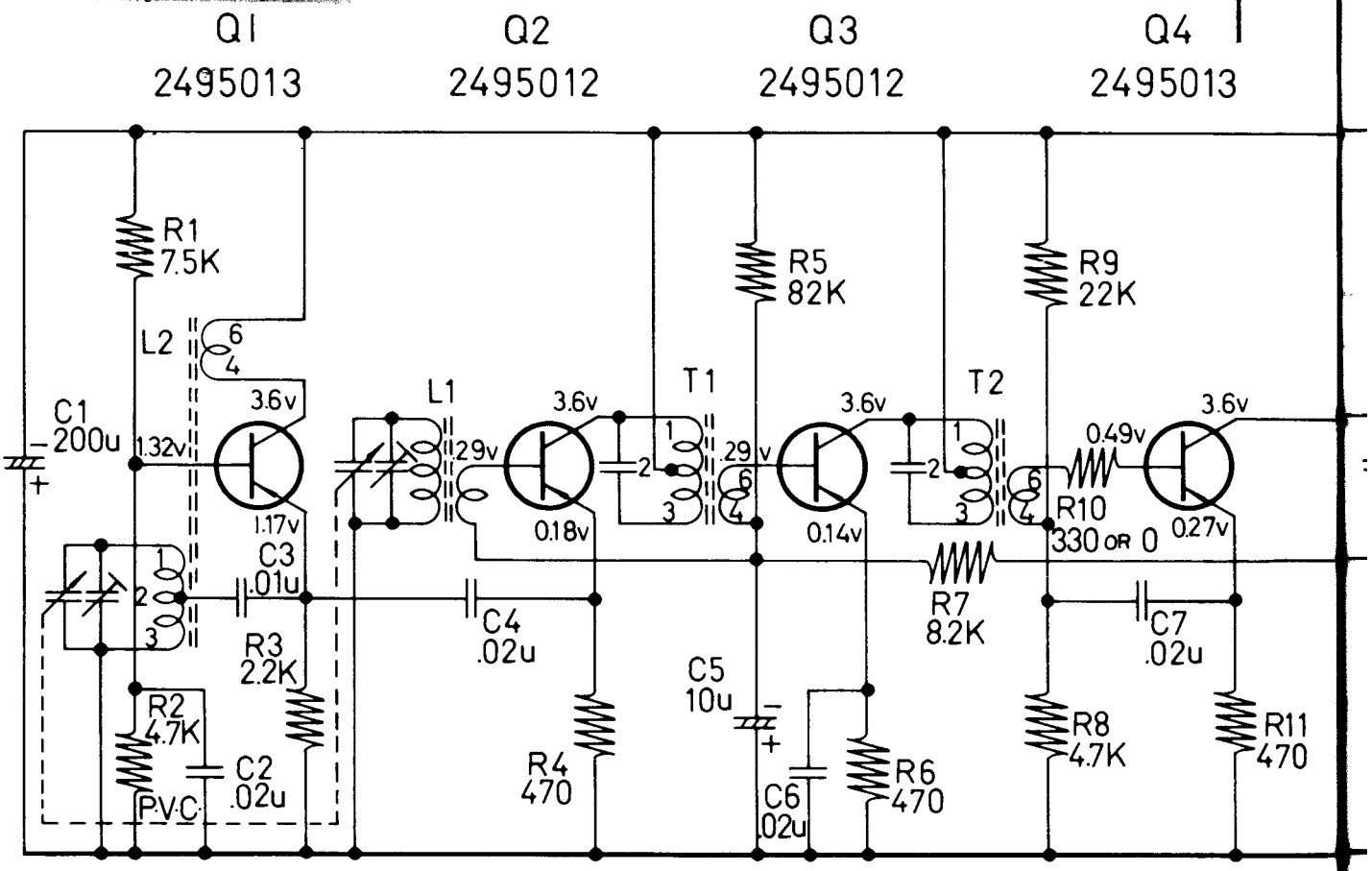


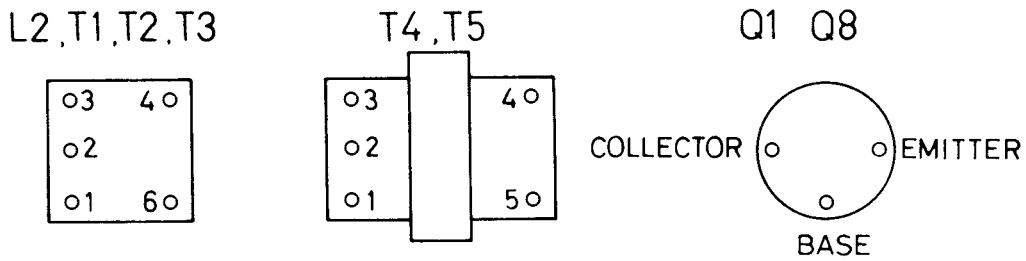


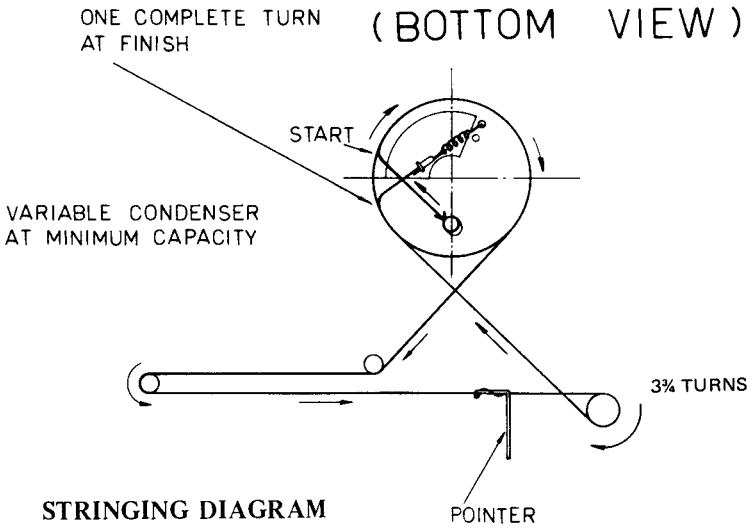


STRINGING DIAGRAM

IF 455 KC

Silvertone

RADIO CHASSIS NO. **132.41501**

| USED IN RADIO MODEL |
|---|
| 2230 |
| 2231 |
| 2232 |

(Continued from preceding page.)

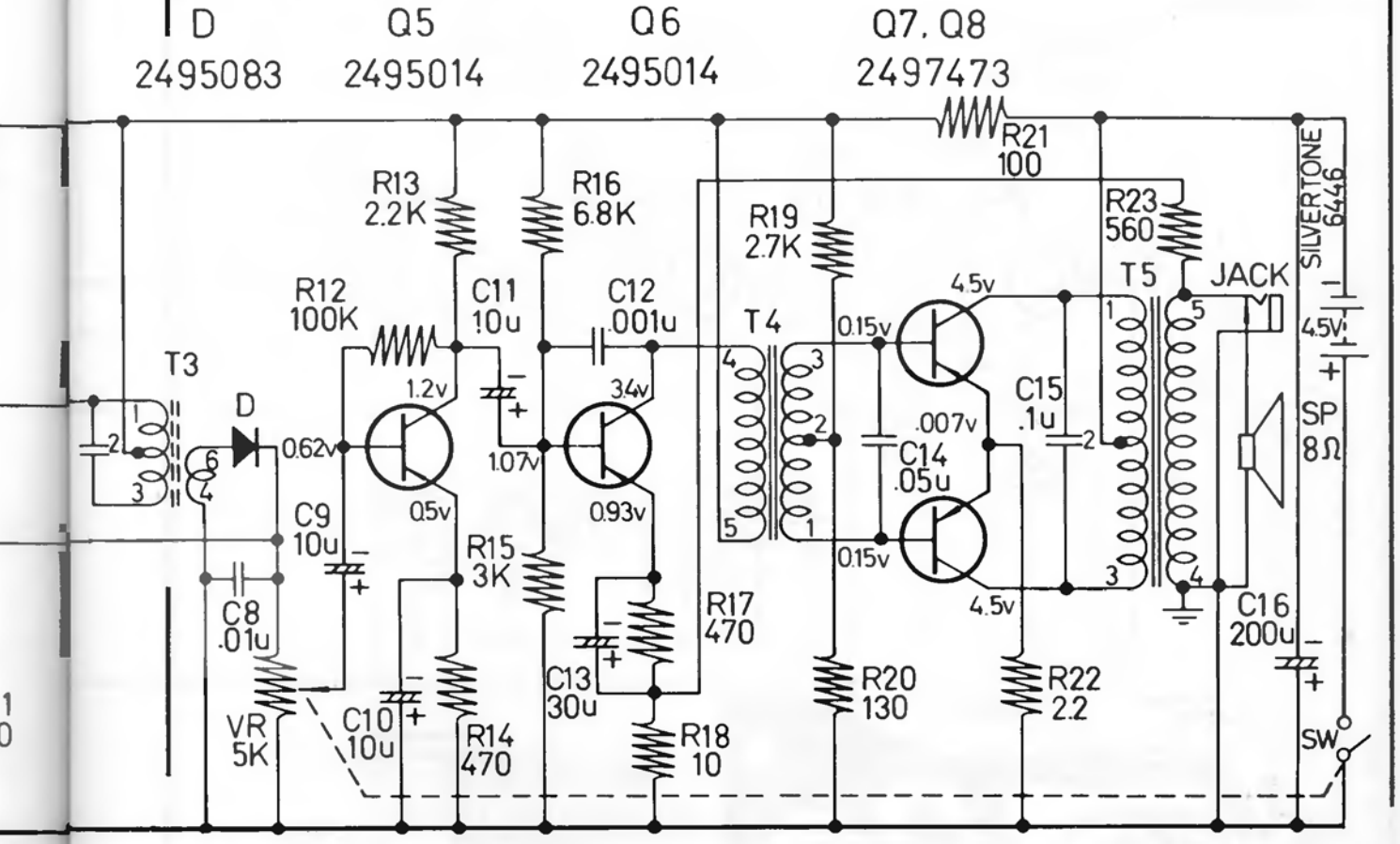


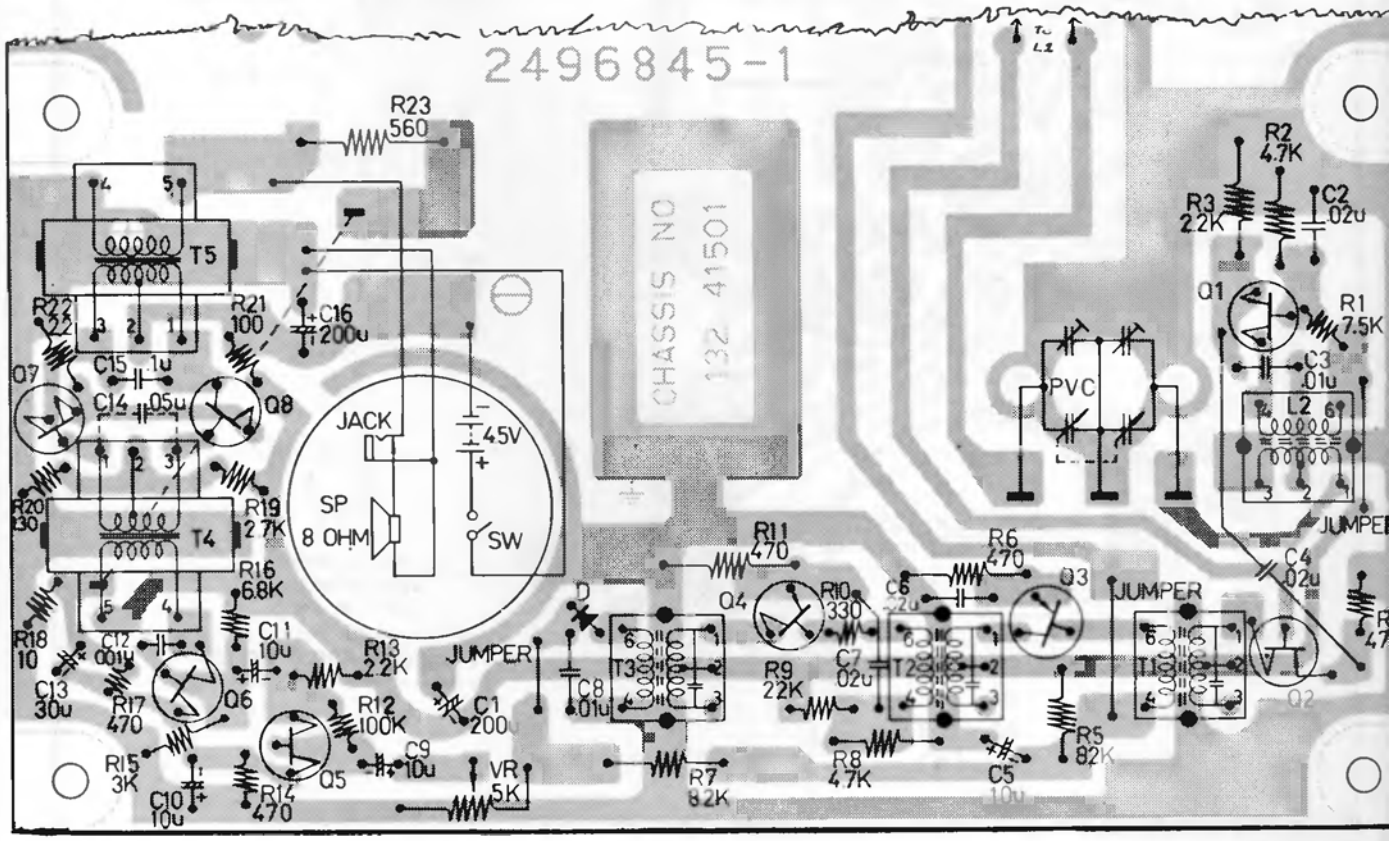




CIRCUIT BOARD DIAGRAM
(Bottom View)

SEARS Silvertone RADIO CHASSIS NO. **132.42301** (Continued on next page.)

TR-1 2SA29-1 CONVERTER

TR-2 2SA29-2 FIRST I.F.

TR-3 2SA29-3 SECOND I.F.

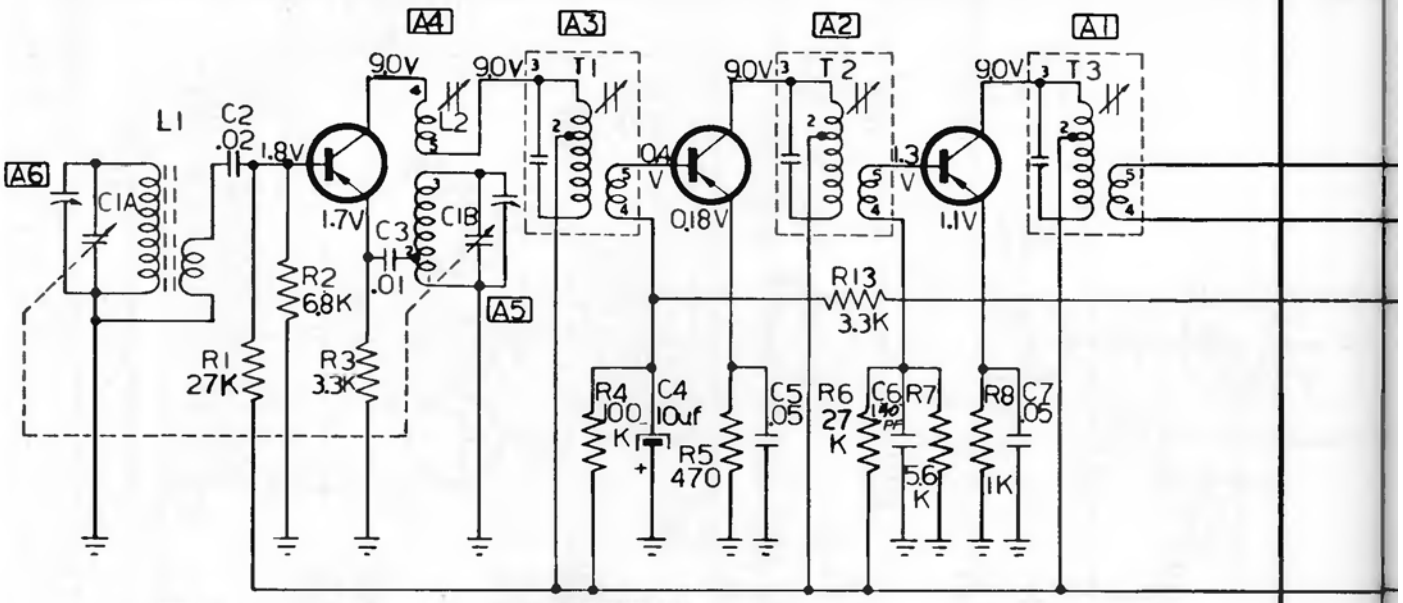


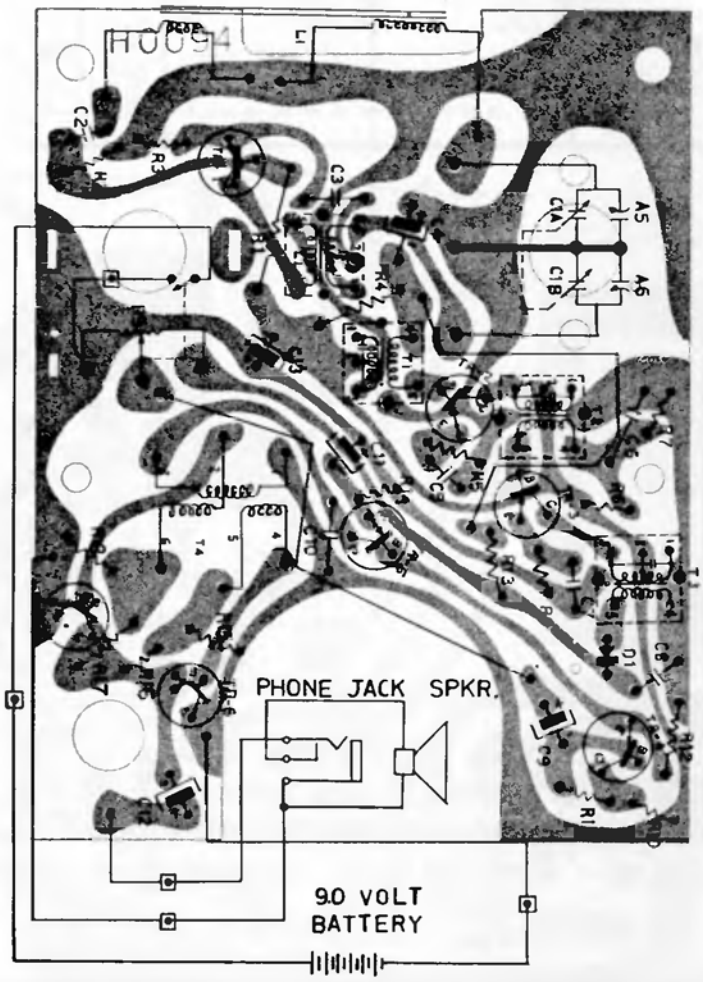


TRANSISTOR (BOTTOM VIEW)

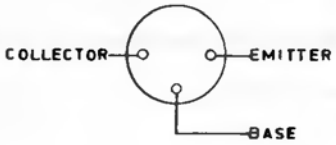


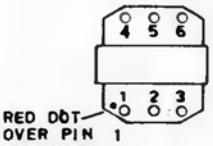


AUDIO DRIVER TRANSFORMER T4 (BOTTOM VIEW)


I. F. TRANSFORMER & OSCILLATOR COIL (BOTTOM VIEW)

| USED IN RADIO MODEL |
|---|
| **2203** |

CIRCUIT BOARD DIAGRAM (BOTTOM VIEW)

**SEARS** CHASSIS 132.42301 (Continued from preceding page.)
MODEL 2203

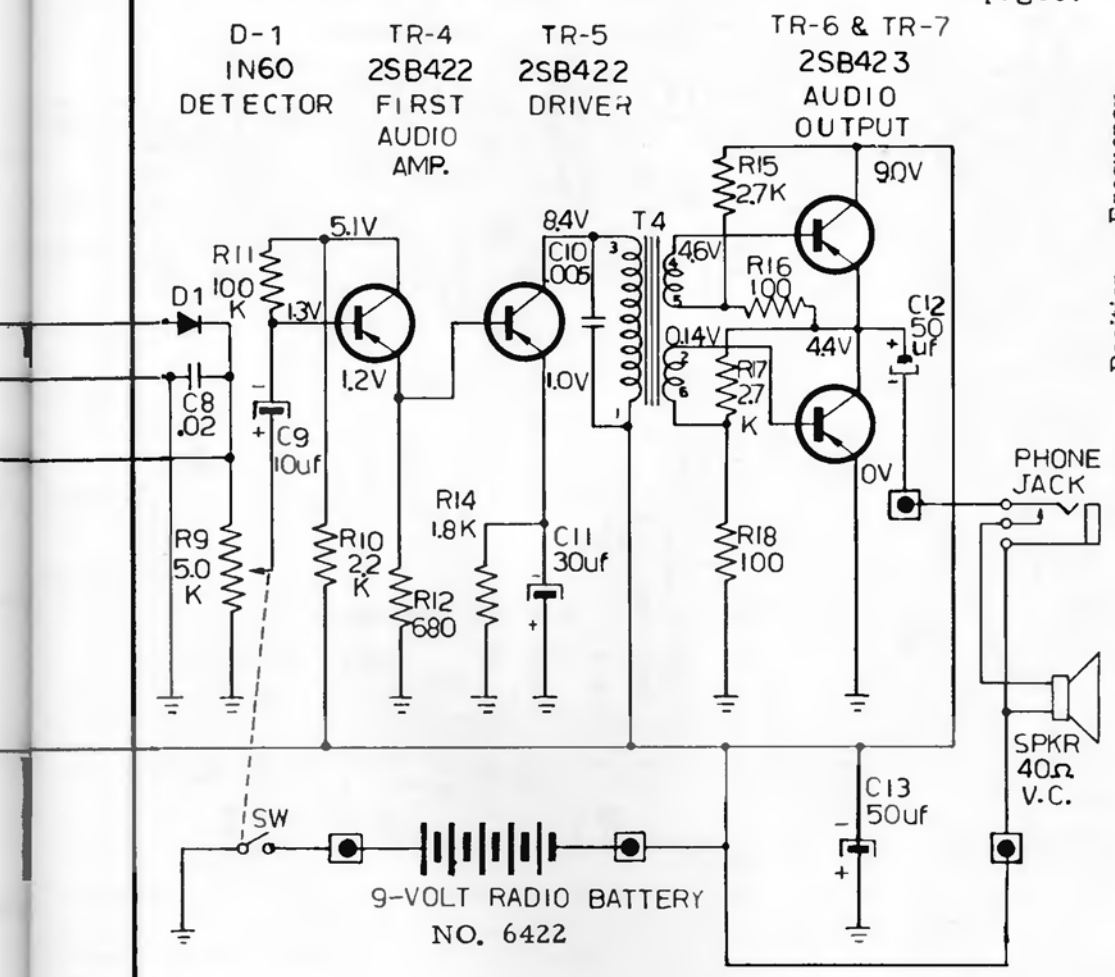


| Position of Variable | Frequency of Generator | Dummy Antenna |
|---|---|---|
| Open | 455 kHz | .05 mf. |
| Closed | 530 kHz | |
| Open | 1640 kHz | |
| 1400 kHz | 1400 kHz | |
| 600 kHz | 600 kHz | |

⏚ = COMMON GROUND SYMBOL.
⊡ = EXTERNAL CONNECTION TO PRINTED CIRCUIT.
RESISTANCE VALUES ARE IN OHMS: K=1000.
CAPACITANCE VALUES LESS THAN 1.0 ARE MICROFARADS (uf), AND VALUES GREATER THAN 1.0 ARE IN MICRO-MICROFARADS (pF) EXCEPT WHERE NOTED.
VOLTAGE READINGS TO COMMON GROUND ARE MEASURED WITH VACUUM TUBE VOLTMETER UNDER NO SIGNAL CONDITIONS WITH TUNING CAPACITOR CLOSED AND VOLUME CONTROL AT MINIMUM VOLUME POSITION. TOTAL BATTERY CURRENT DRAIN UNDER NO SIGNAL CONDITIONS, 8 TO 15 MA.

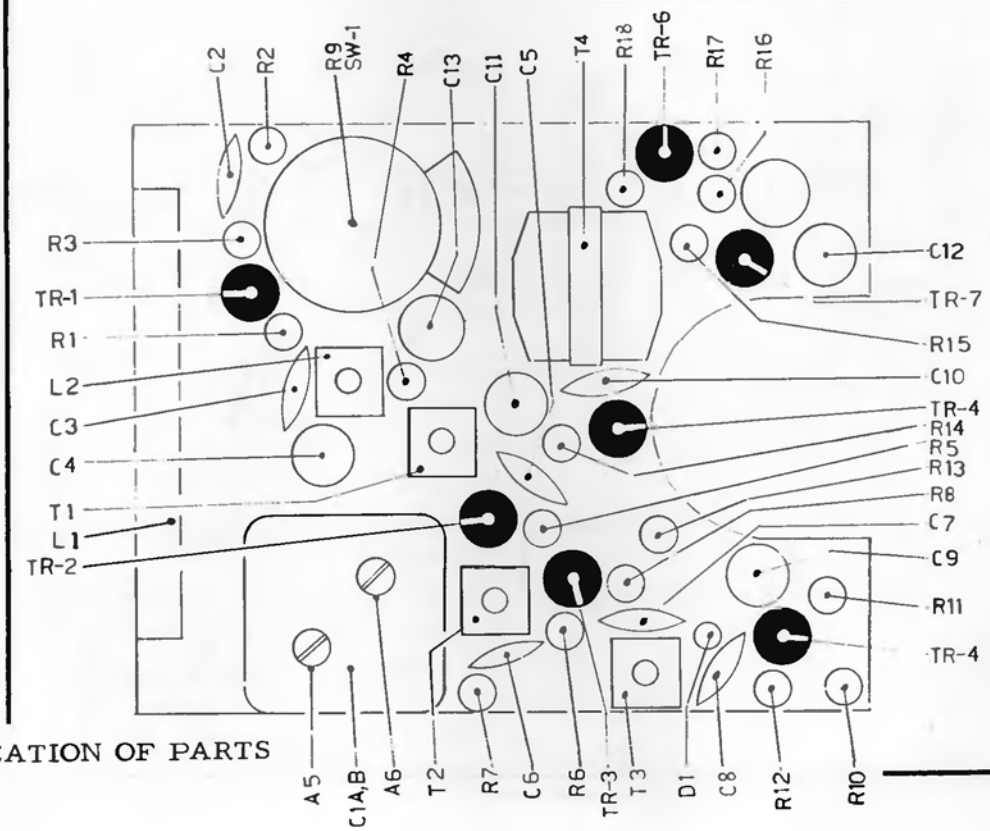


LOCATION OF PARTS

SEARS | Silvertone RADIO CHASSIS NO. 132.53701 MODEL 2097

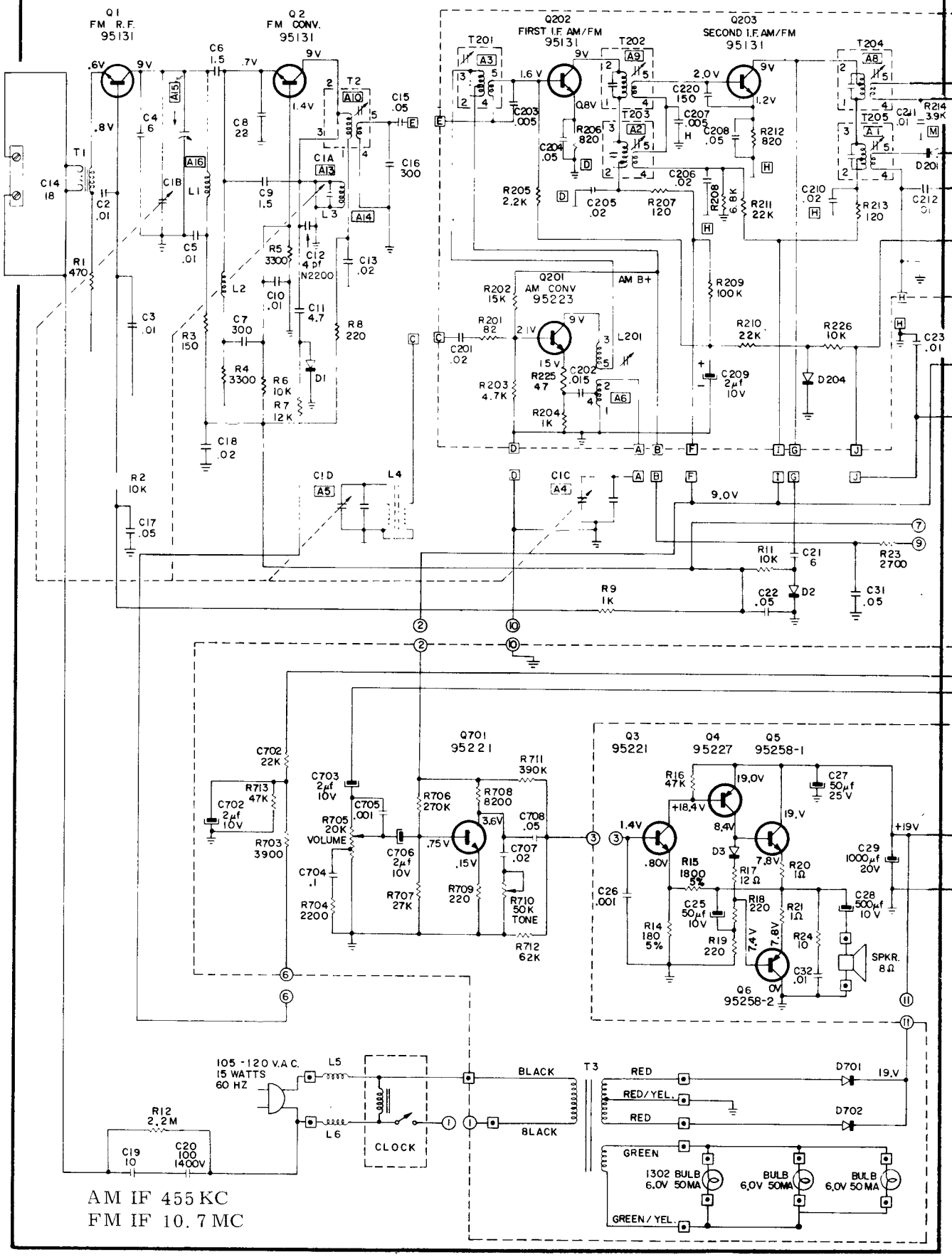


AM IF 455 KC
FM IF 10.7 MC



(Continued on next page.)

 (Continued from preceding page.)

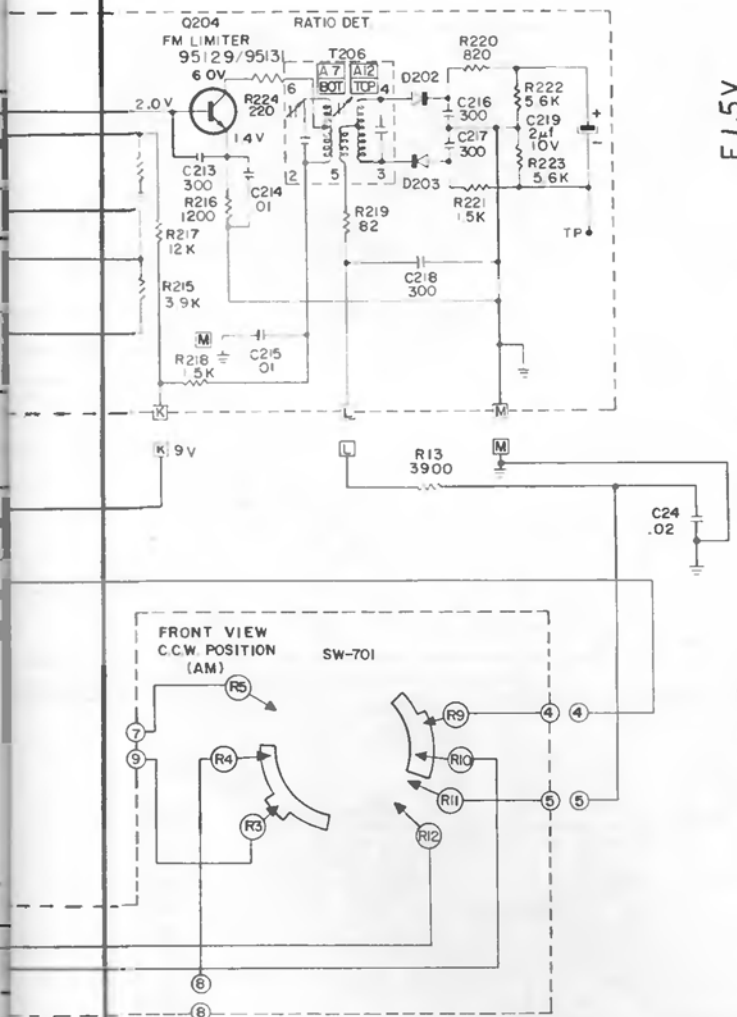


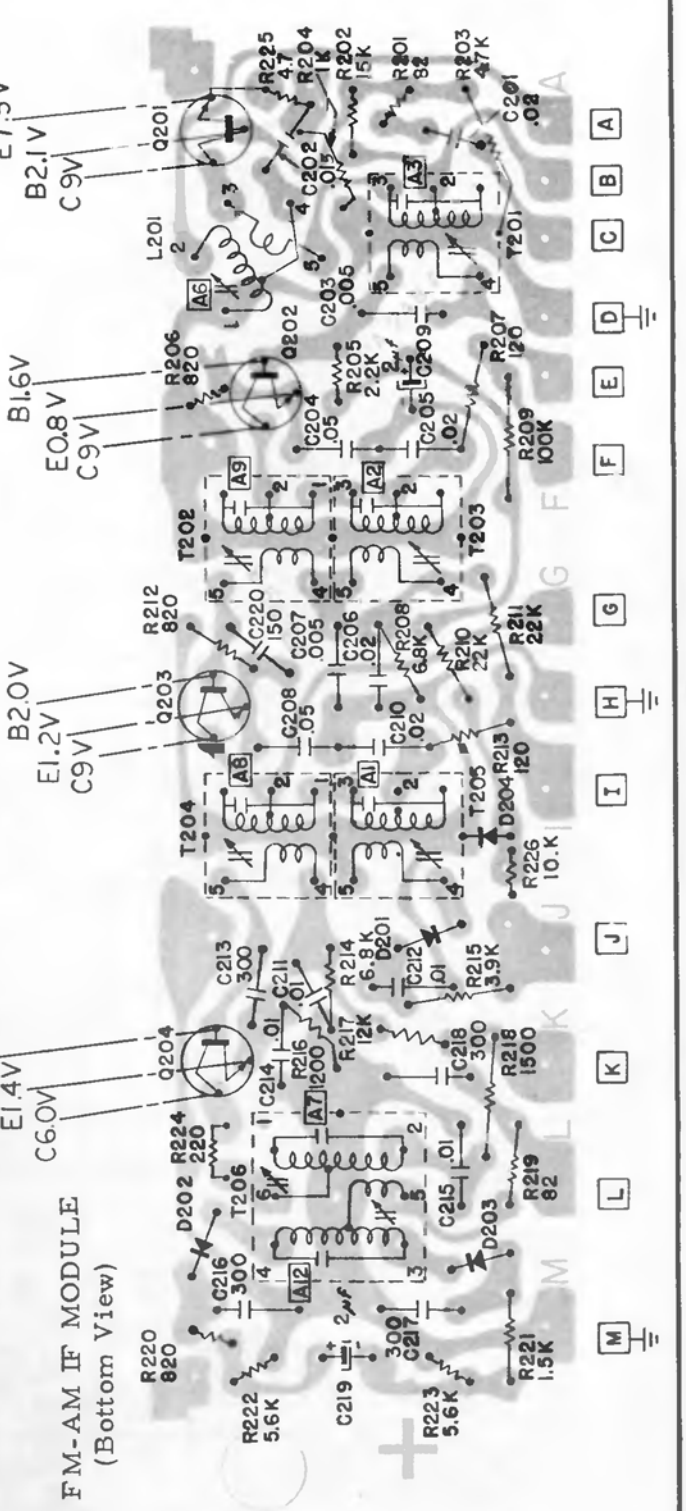


NOTES

1. RESISTANCE VALUES ARE IN OHMS K=1000, M=MEG.
2. ALL RESISTORS 10% AND 1/2 WATT UNLESS OTHERWISE SPECIFIED.
3. ALL VOLTAGES MEASURED WITH A VTVM WITH NO SIGNAL.
4. ALL VOLTAGES MEASURED FROM B-GROUND. ⏚
5. ALL CAPACITORS 25 VOLTS UNLESS OTHERWISE SPECIFIED.
6. CAPACITANCE VALUES LISTED IN DECIMALS ARE IN MICROFARADS (µf) AND VALUES GREATER THAN 1.0 ARE PICOFARDS (pF) UNLESS OTHERWISE SPECIFIED.
7. ⏚ = COMMON GROUND SYMBOL.
8. [A] = I.F. MODULE BOARD TO CARRIER BOARD CONNECTION.
9. (1) = CONTROL BOARD CONNECTION TO CARRIER BOARD.
10. △ = TERMINAL STRIP CONNECTION.
11. ⊐ = OFF BOARD CONNECTIONS.
12. COMPONENT NUMBERS 1 TO 99 ARE LOCATED ON CARRIER BOARD.
13. COMPONENT NUMBERS 201 TO 299 ARE LOCATED ON I.F. MODULE.
14. COMPONENT NUMBERS 701 TO 799 ARE LOCATED ON CONTROL BOARD.

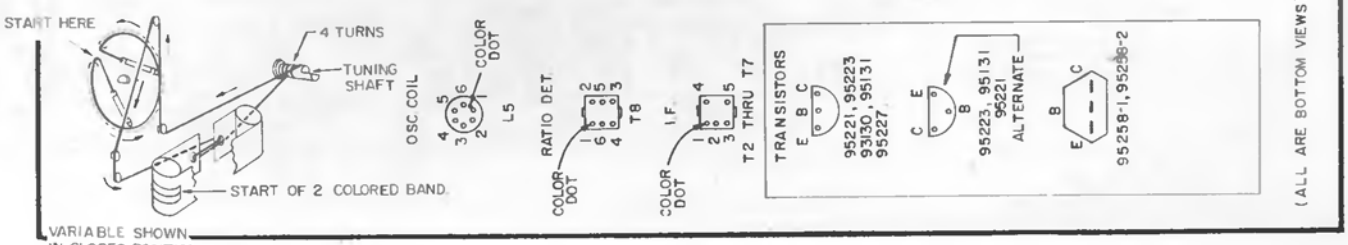


VARIABLE SHOWN IN CLOSED POSITION

STRINGING DIAGRAM

**SEARS, ROEBUCK and CO.** CHASSIS NO. 528.64330 Models: 3060, 3061, 3062

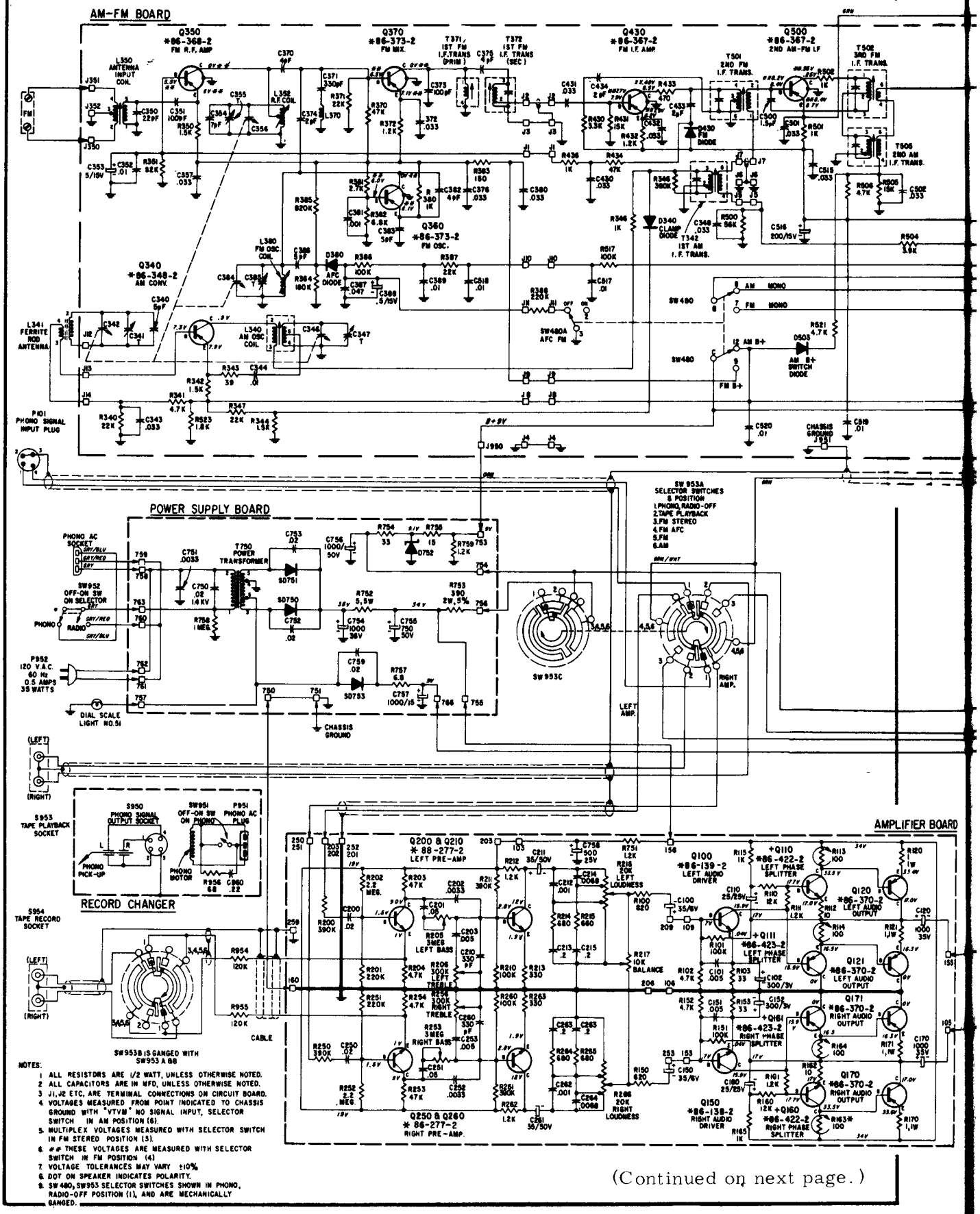


NOTES:

1. ALL RESISTORS ARE 1/2 WATT, UNLESS OTHERWISE NOTED.
2. ALL CAPACITORS ARE IN MFD, UNLESS OTHERWISE NOTED.
3. J1, J2 ETC. ARE TERMINAL CONNECTIONS ON CIRCUIT BOARD.
4. VOLTAGES MEASURED FROM POINT INDICATED TO CHASSIS GROUND WITH "VTVM" NO SIGNAL INPUT, SELECTOR SWITCH IN AM POSITION (6).
5. MULTIPLEX VOLTAGES MEASURED WITH SELECTOR SWITCH IN FM STEREO POSITION (3).
6. ## THESE VOLTAGES ARE MEASURED WITH SELECTOR SWITCH IN FM POSITION (4)
7. VOLTAGE TOLERANCES MAY VARY ±10%
8. DOT ON SPEAKER INDICATES POLARITY.
9. SW 480, SW953 SELECTOR SWITCHES SHOWN IN PHONO, RADIO-OFF POSITION (1), AND ARE MECHANICALLY GANGED.

(Continued on next page.)

(Continued from preceding page.)

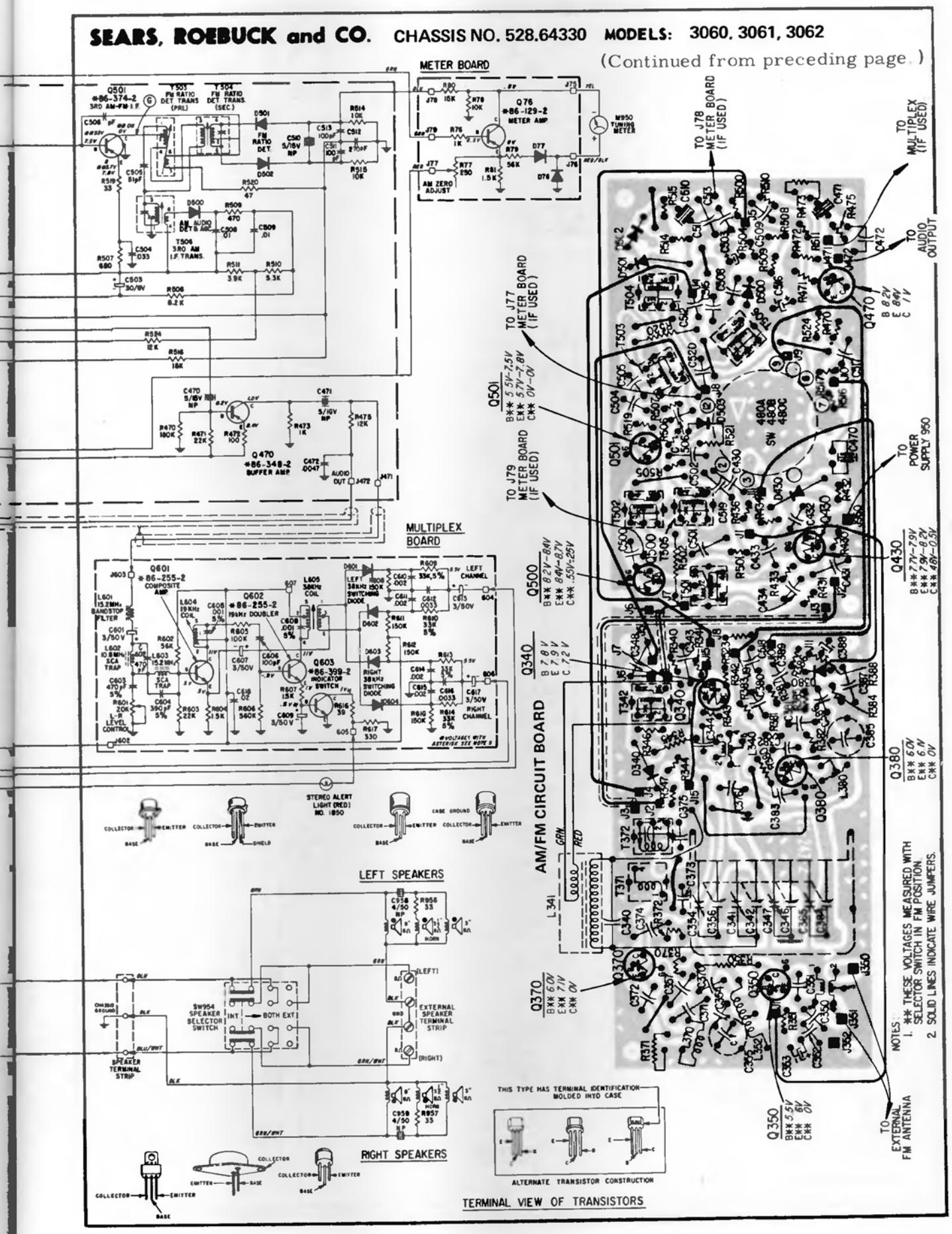

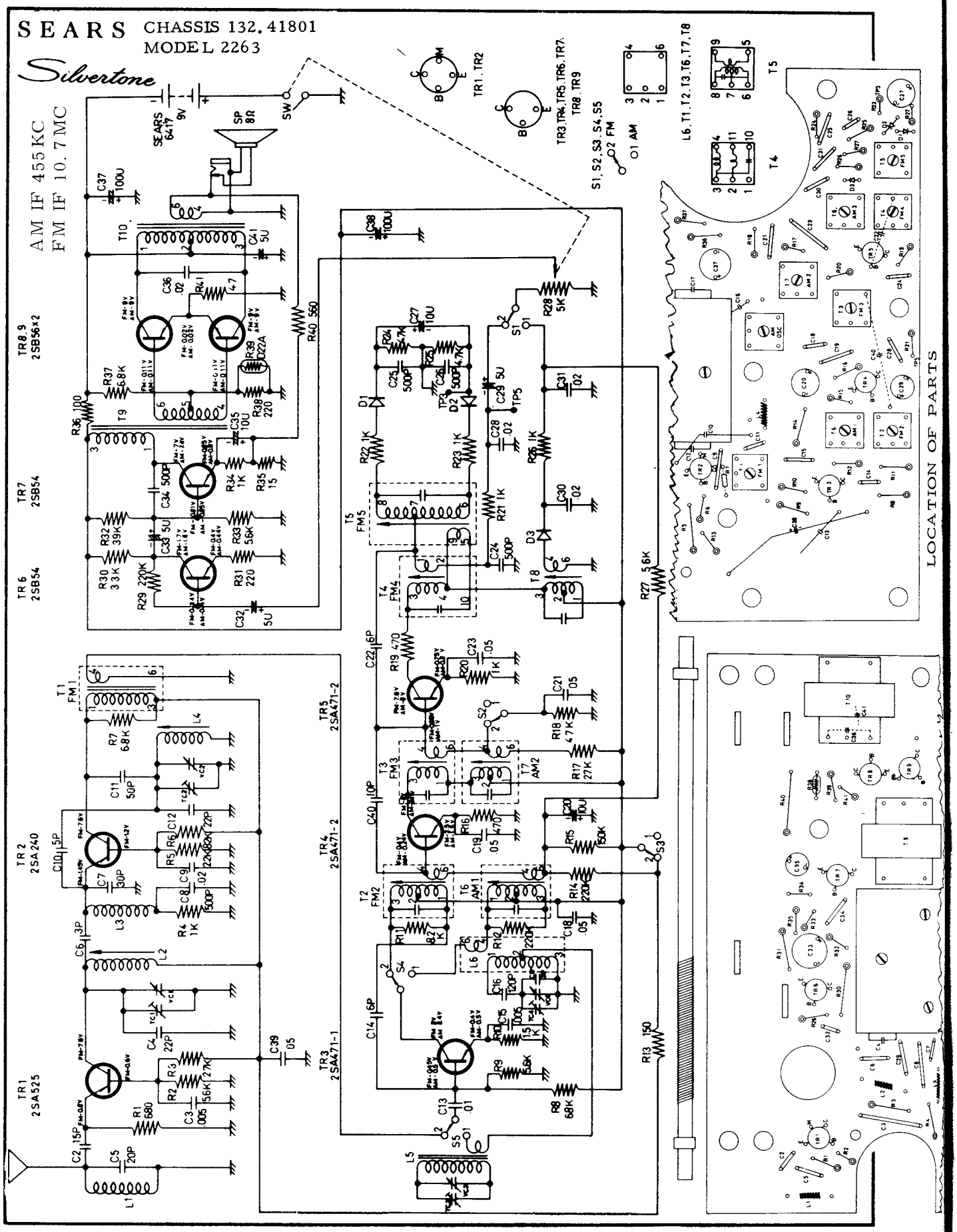
SEARS CHASSIS 132.41801
MODEL 2263
Silvertone
AM IF 455KC
FM IF 10.7MC
TR1 2SA525
TR 2 2SA240
TR 6 2SB54
TR7 2SB54
TR8.9 2SB56X2
TR3 2SA471-1
TR4 2SA471-2
TR5 2SA471-2
SEARS 6419 9V
SP 8Ω
SW
TR1, TR2
TR3, TR4, TR5, TR6, TR7, TR8, TR9
S1, S2, S3, S4, S5
2 FM
1 AM
L6, T1, T2, T3, T6, T7, T8
T5
T4
LOCATION OF PARTS

# MODEL BP-110

NOTES

1. FREQ. RANGE MW 520-1650kHz
2. IF 455kHz
3. CAPACITANCE VALUES ARE IN MFD P:MMFD
4. RESISTANCE VALUES ARE IN OHMS K:1000
5. VOLTAGE READINGS TO COMMON GROUND(+) ARE MEASURED WITH V·T·V·M UNDER NO SIGNAL CONDITIONS

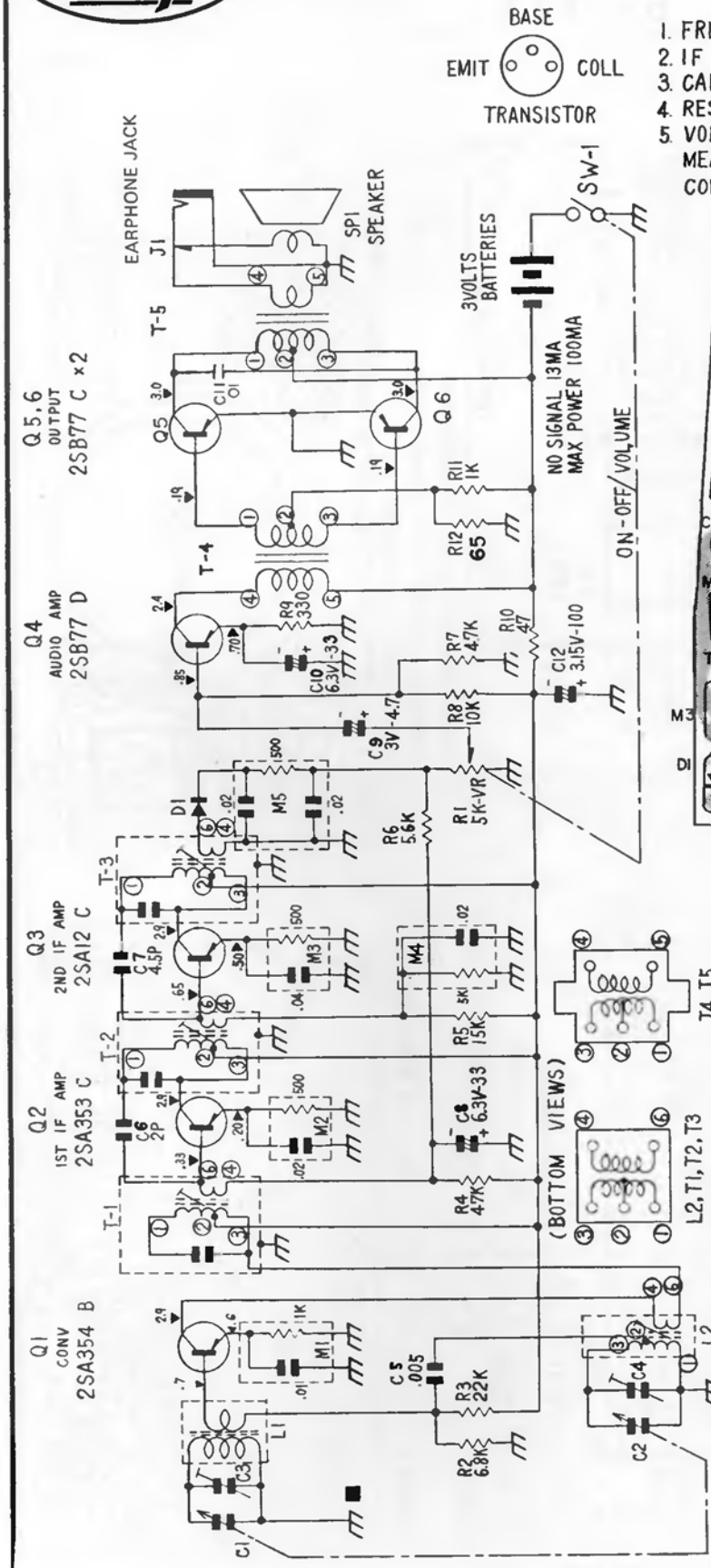


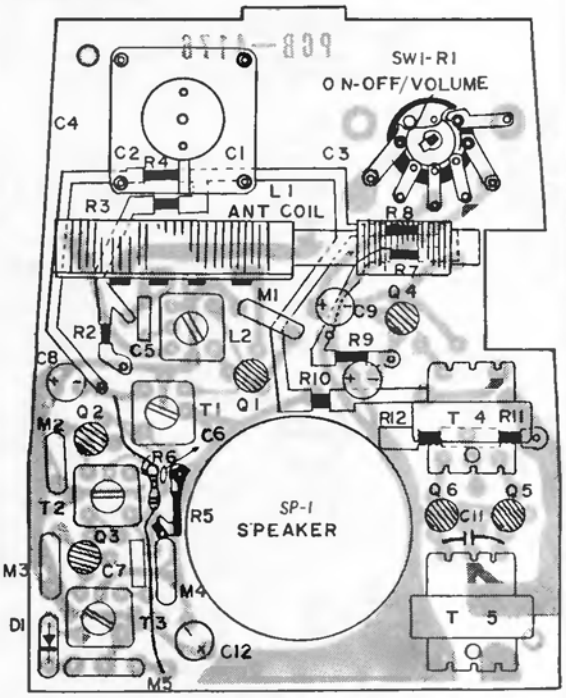


Component Side of Printed Circuit Board

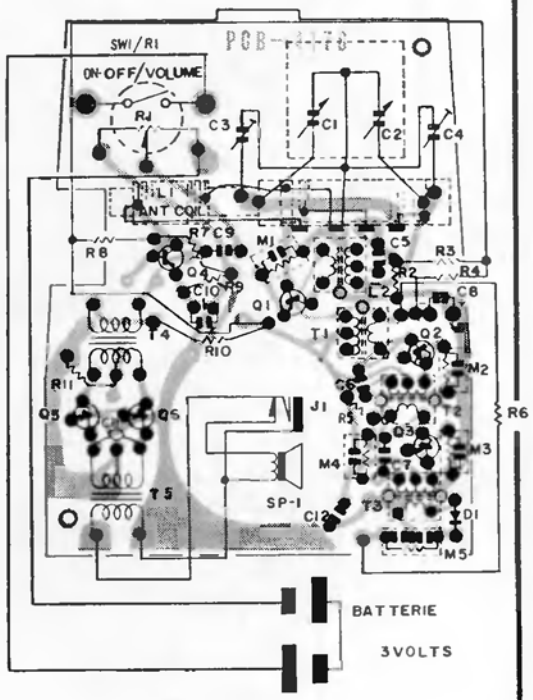


Wiring Side of Printed Circuit Board

# MODEL BP-111

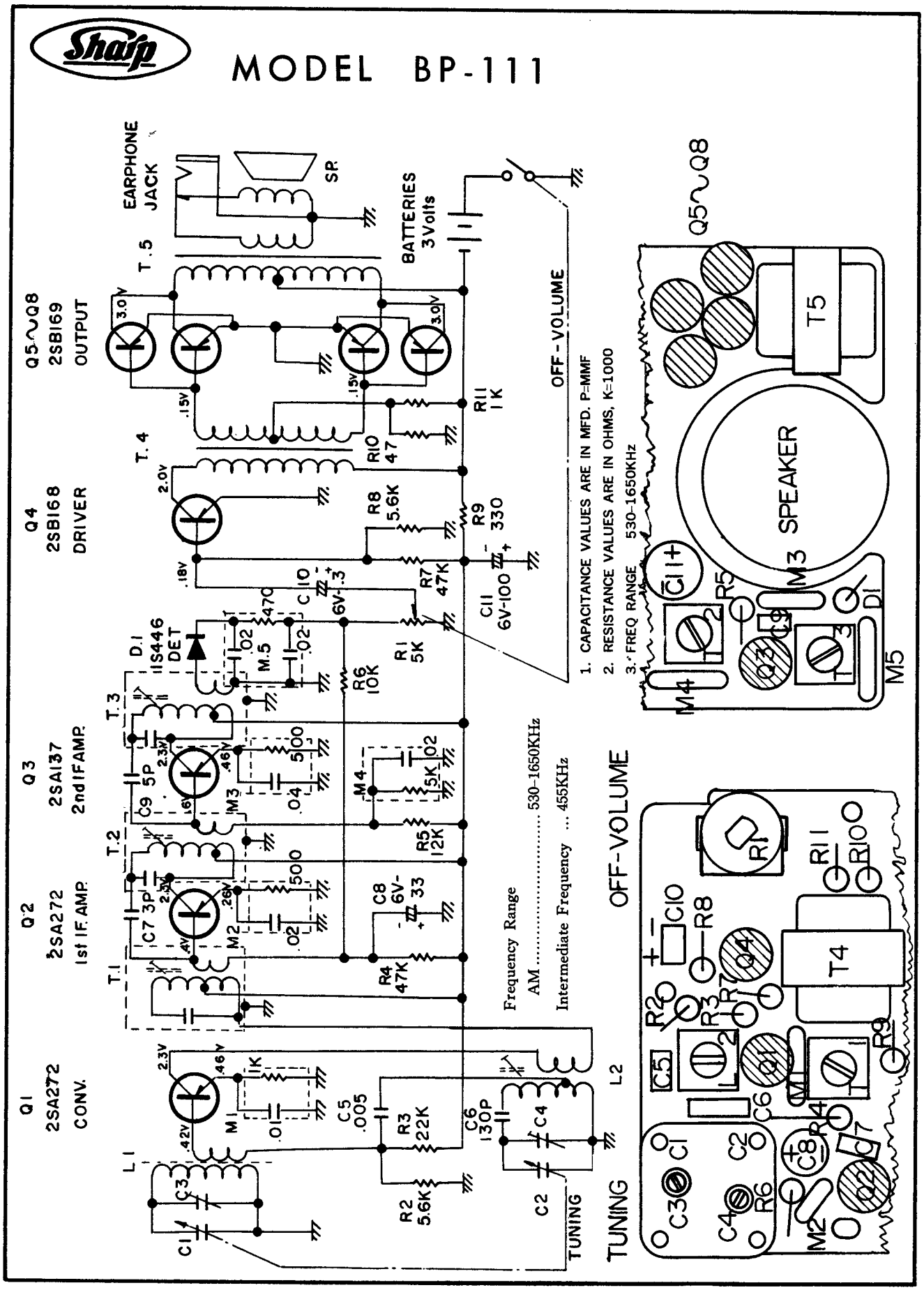
Q1
2SA272
CONV.
Q2
2SA272
1st IF AMP.
Q3
2SA137
2nd IF AMP.
Q4
2SB168
DRIVER
Q5~Q8
2SB169
OUTPUT
EARPHONE JACK
SP.
BATTERIES 3Volts
OFF-VOLUME
TUNING
D1
1S446
DET
Frequency Range
AM ..... 530-1650KHz
Intermediate Frequency ... 455KHz
1. CAPACITANCE VALUES ARE IN MFD. P=MMF
2. RESISTANCE VALUES ARE IN OHMS, K=1000
3. FREQ RANGE 530-1650KHz
SPEAKER
COMPONENT SIDE OF PRINTED CIRCUIT BOARD

# Sharp MODEL FX-111A

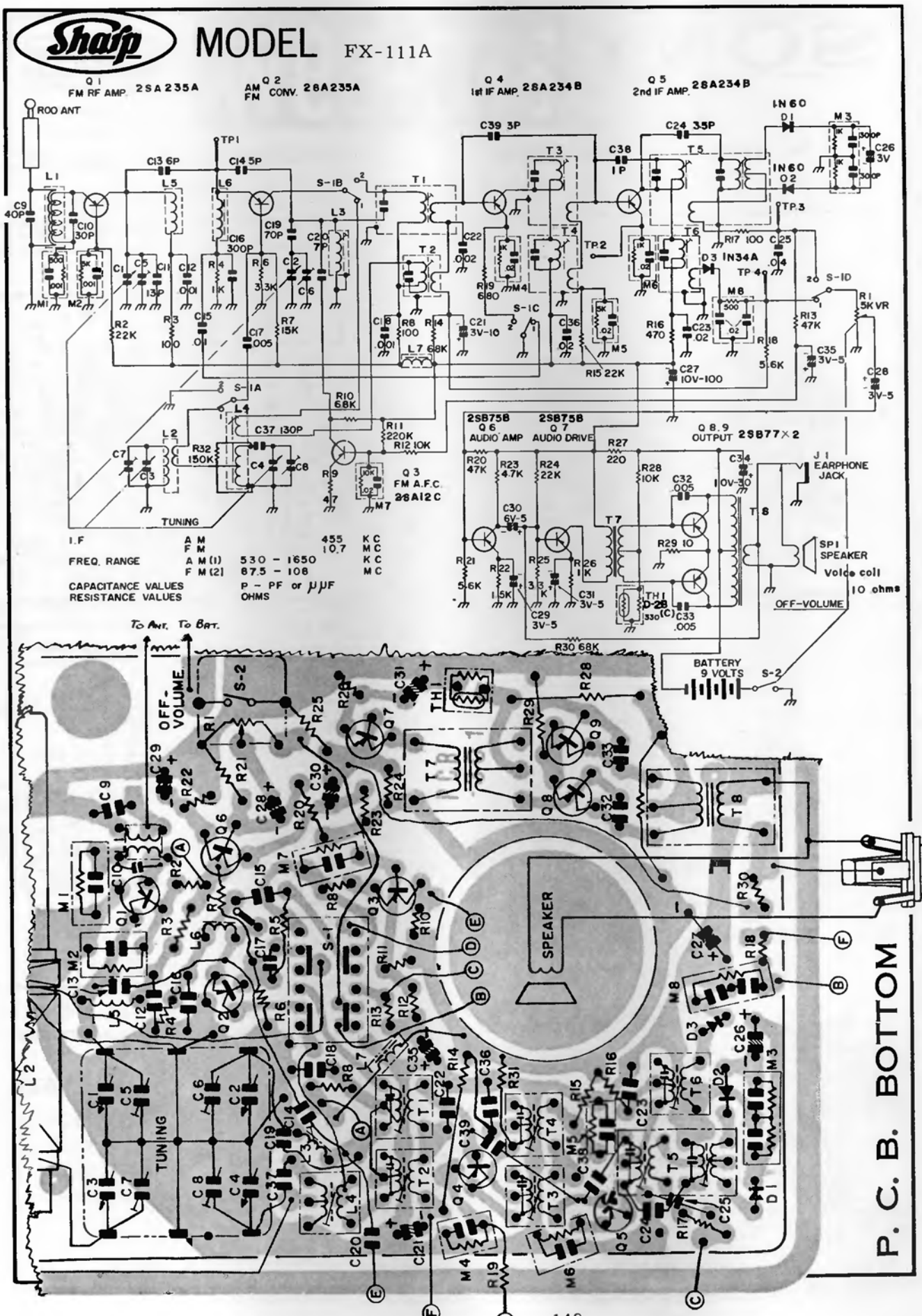

# SONY 8FC-69W

(Continued on next page.)

X101 2SC629 X102 2SC629 X201 2SC403A X202 2SC403A

D101 IT26 D102 IT240 D201 IT26

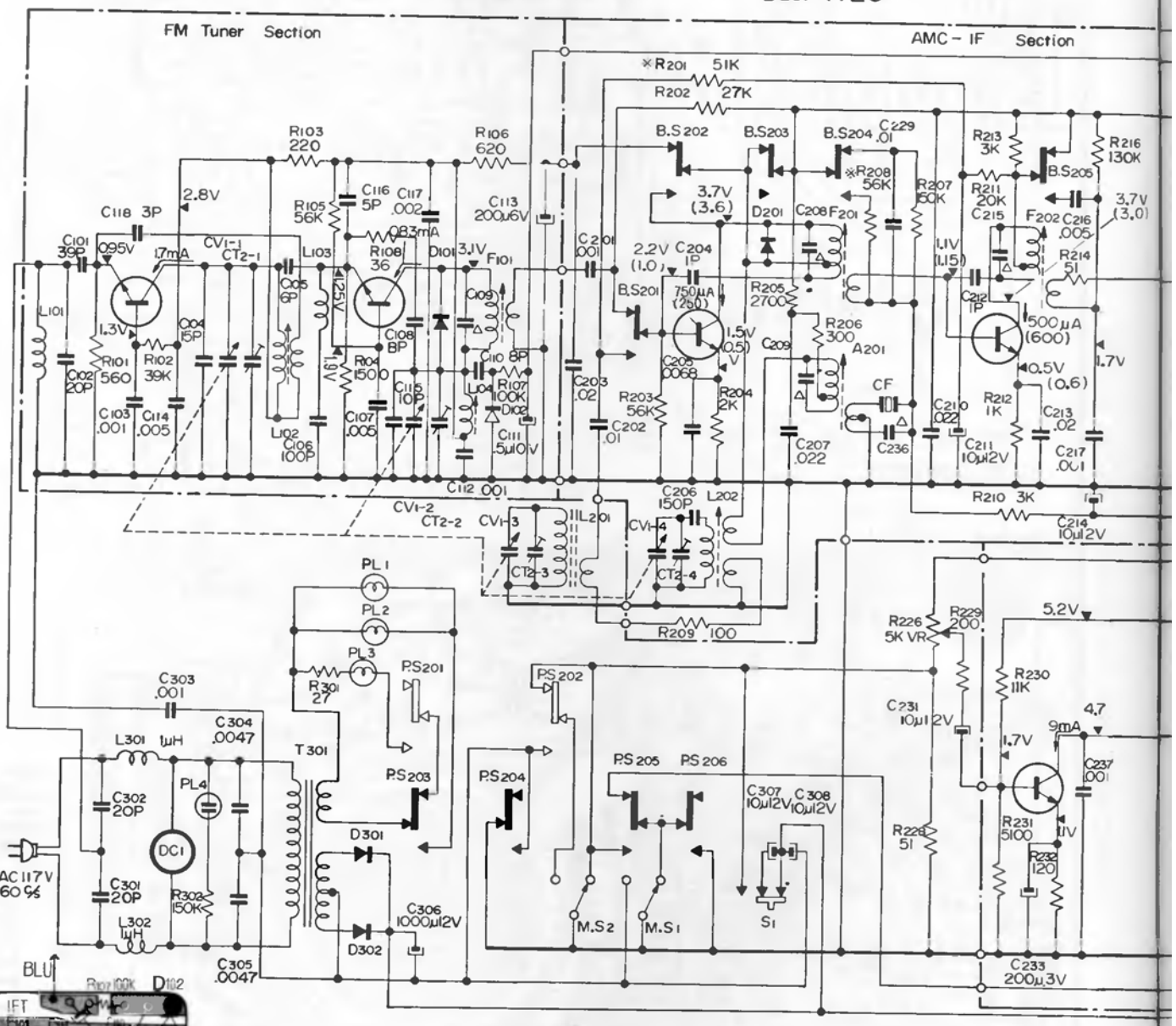

# SONY 8FC-69W

(Continued from preceding page.)

X203 2SC403A

D204 IT23 D202,203 IT26

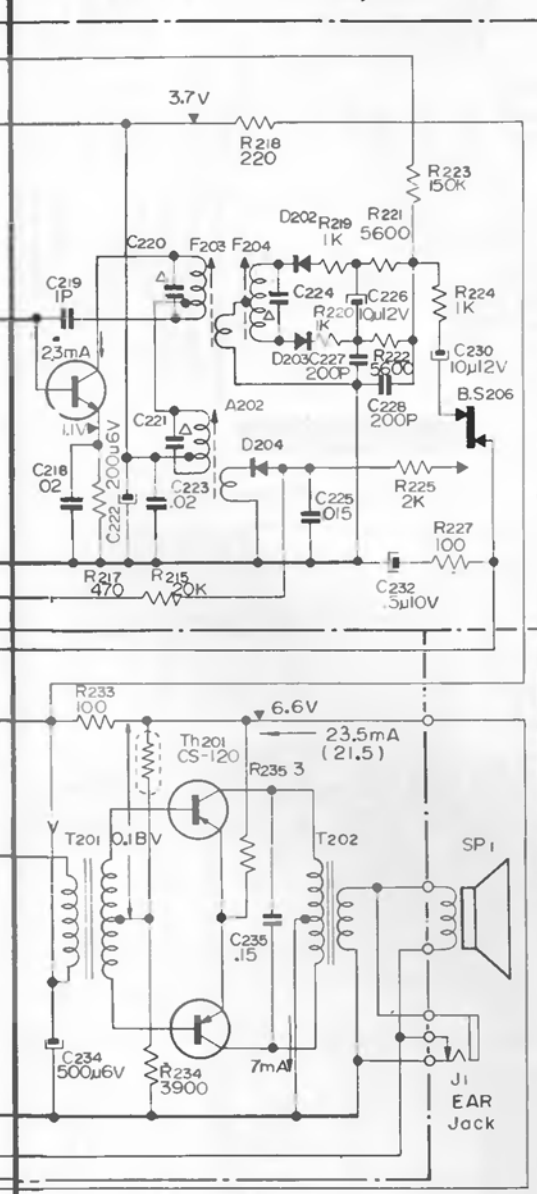


AF Section

X205, 206 2SB383

X201 2SC403
X202 2SC403
X203 2SC403
X204 2SC633

X205 2SB383
X206 2SB383

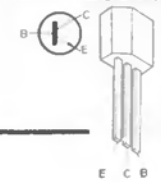


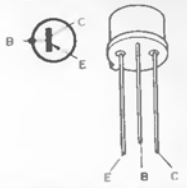


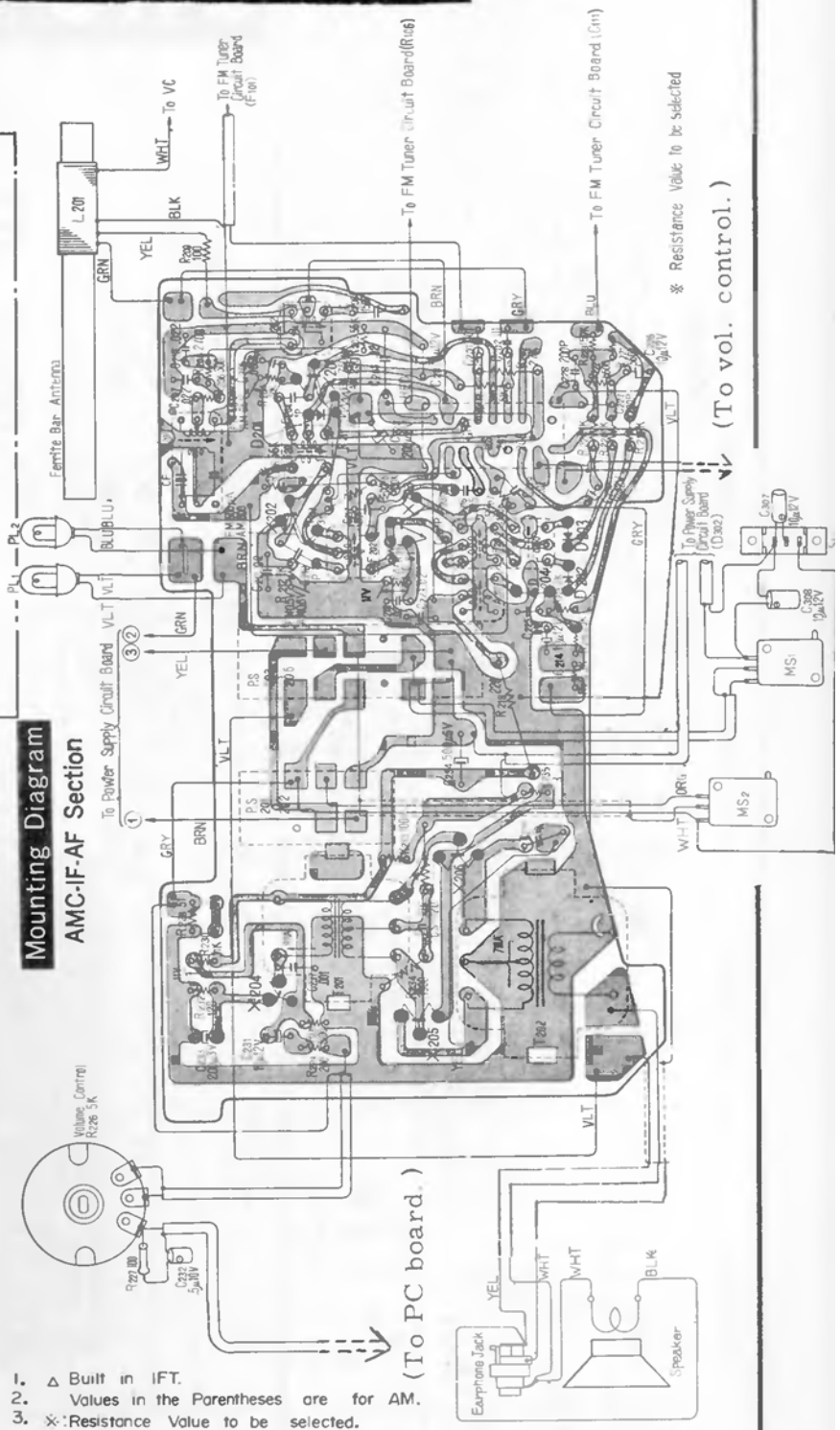


1. △ Built in IFT.
2. Values in the Parentheses are for AM.
3. ※: Resistance Value to be selected.
4. B.S 201-206 : Band Setting Switch.
5. FM ▶ Band Setting Switch shown is set to FM position.
   AM ▶
6. P.S 201-202 : Automatic Switch.
7. P.S 203-206 : Manual Switch.

**Intermediate Frequency:** FM 10.7 Mc AM 455 Kc

# SONY 6RC-23

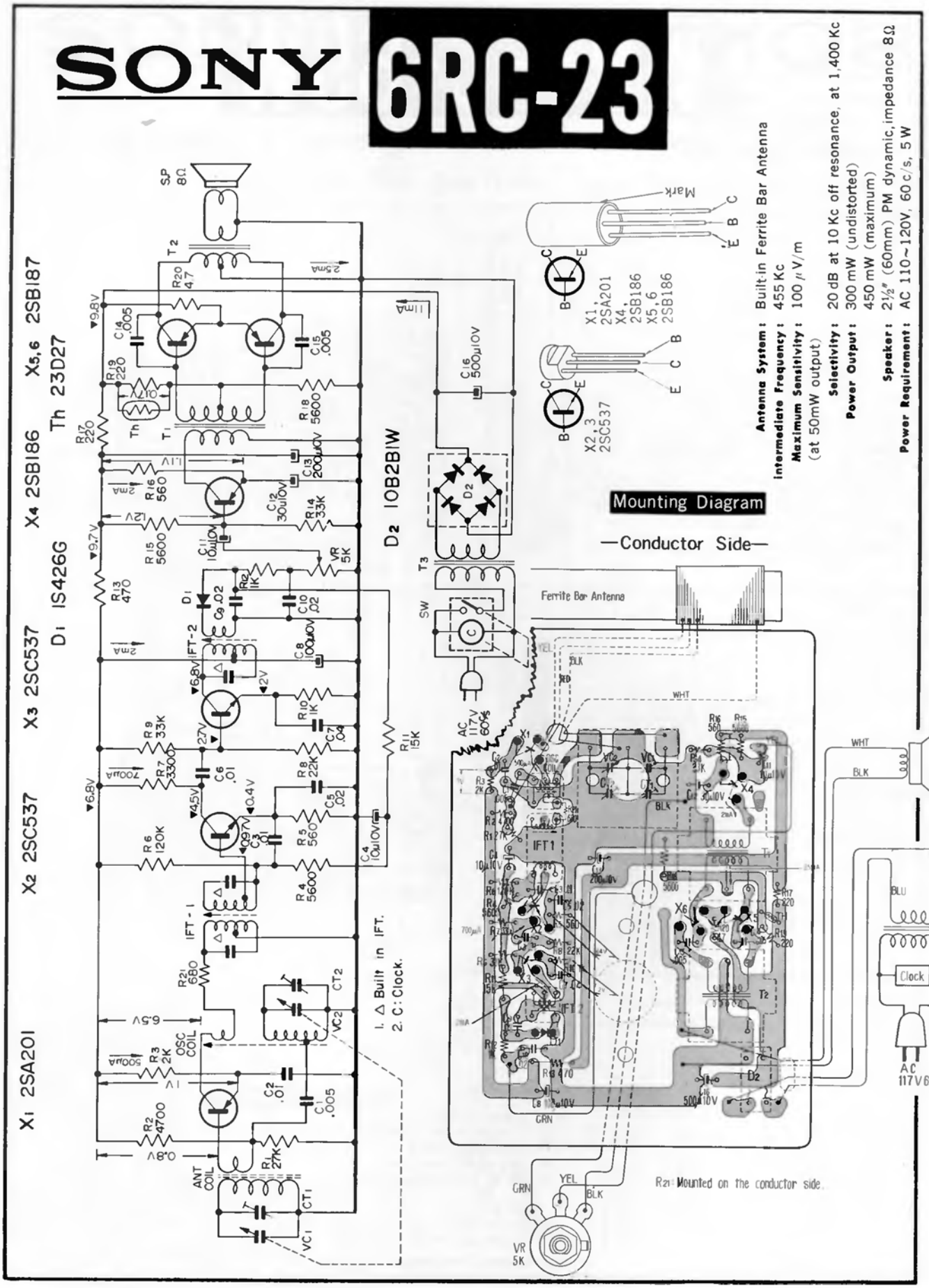


**Antenna System:** Built-in Ferrite Bar Antenna
**Intermediate Frequency:** 455 Kc
**Maximum Sensitivity:** 100 μV/m (at 50mW output)
**Selectivity:** 20 dB at 10 Kc off resonance, at 1,400 Kc
**Power Output:** 300 mW (undistorted) 450 mW (maximum)
**Speaker:** 2½" (60mm) PM dynamic, impedance 8Ω
**Power Requirement:** AC 110~120V, 60 c/s, 5 W

# SYLVANIA

**MODELS: AK55, AK60, AK70, AT50** Chassis U50-3, 4, 6

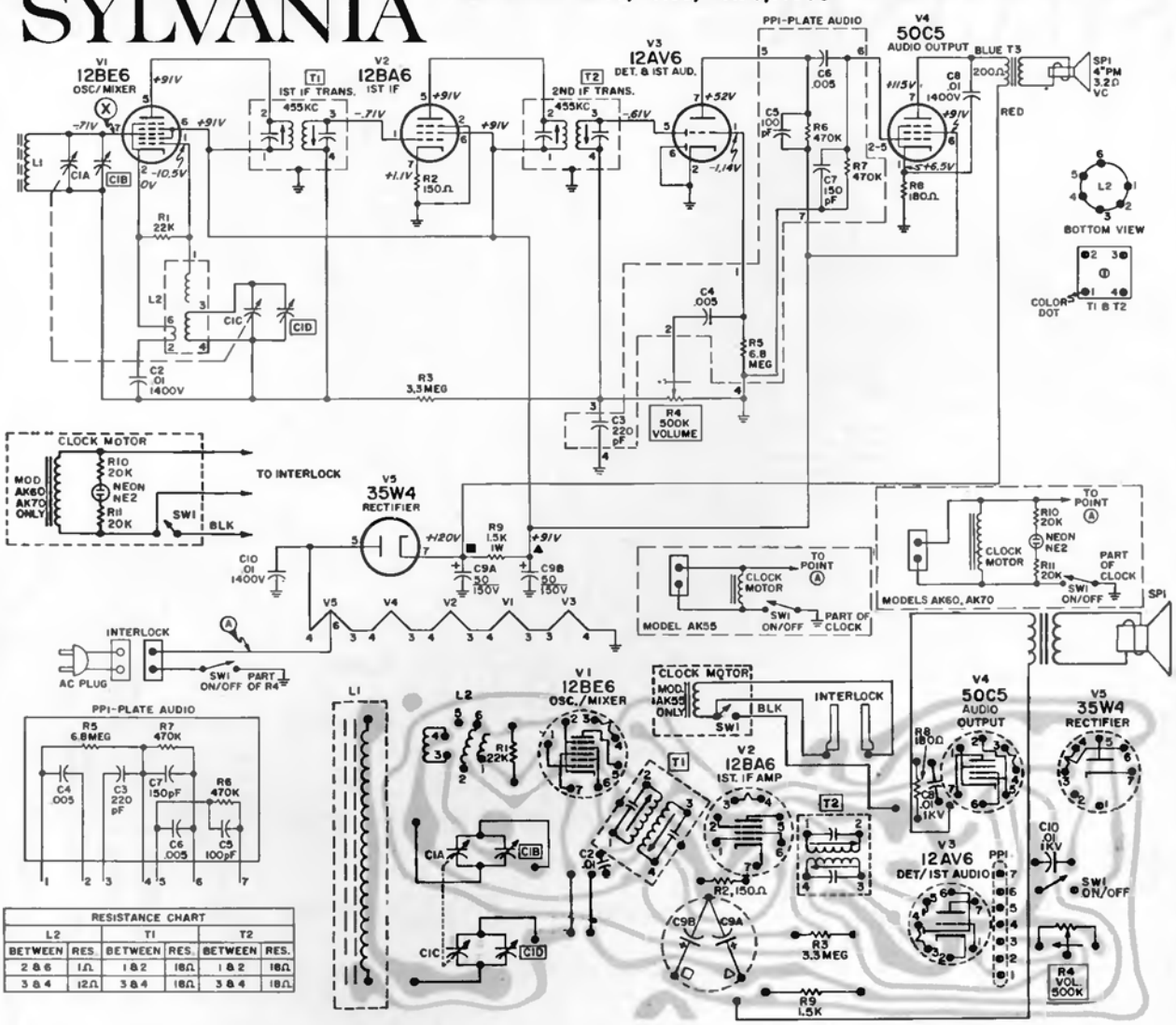


| RESISTANCE CHART | | | | | |
|---|---|---|---|---|---|
| L2 | | T1 | | T2 | |
| BETWEEN | RES. | BETWEEN | RES. | BETWEEN | RES. |
| 2 & 6 | 1Ω | 1 & 2 | 18Ω | 1 & 2 | 18Ω |
| 3 & 4 | 12Ω | 3 & 4 | 18Ω | 3 & 4 | 18Ω |

**BOTTOM VIEW**

| STEP | TUNING CAPACITOR SETTING | TEST EQUIPMENT HOOK-UP | GENERATOR FREQUENCY | ADJUSTMENT POINT | ADJUST FOR |
|---|---|---|---|---|---|
| 1 | Fully open | SIGNAL GENERATOR - "Hot" lead thru a 200pF capacitor to test point (X). Ground lead to chassis<br><br>AC VOLTMETER - Across speaker voice coil. | 455 KC<br>400 CPS<br>30% MOD. | T2 Bottom Core<br>T2 Top Core<br>T1 Bottom Core<br>T1 Top Core | Maximum Meter Reading |
| 2 | Same as Step 1 | SIGNAL GENERATOR - Radiate signal to receiver thru a loop of several turns of wire.<br><br>AC VOLTMETER - Same as Step 1. | 1625 KC<br>400 CPS.<br>30% MOD. | C1D Trimmer | Maximum Meter Reading |
| 3 | 1400 KC | Same as Step 2 | Set generator to a frequency corresponding to receiver tuning capacitor setting (until signal is heard thru receiver speaker). | C1B Trimmer | Maximum Meter Reading |

# SYLVANIA

**MODELS: BT44, BT46, BK54, BK56** (Continued on next page.)

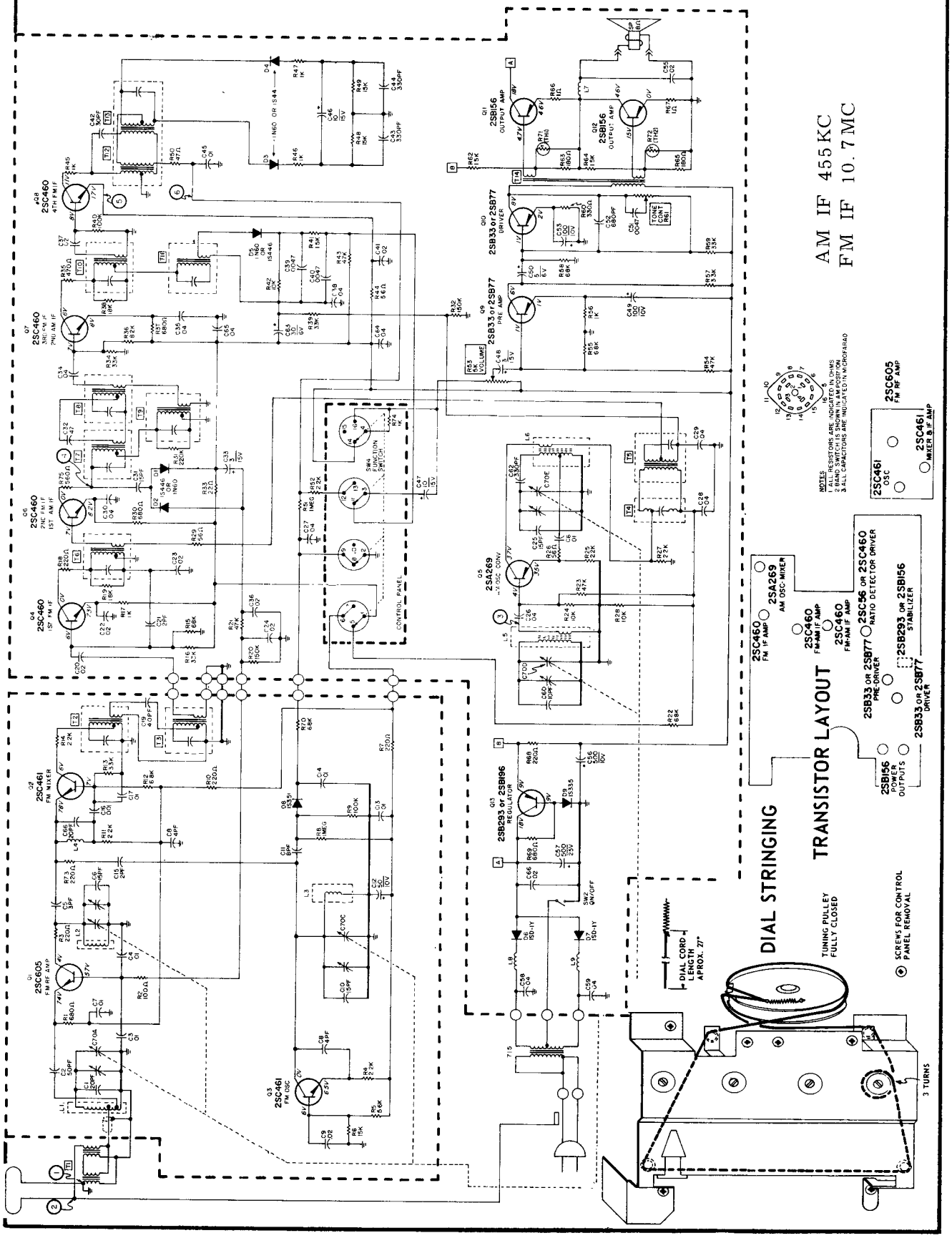

# SYLVANIA MODELS: BT44, BT46, BK54, BK56

(Continued from preceding page )

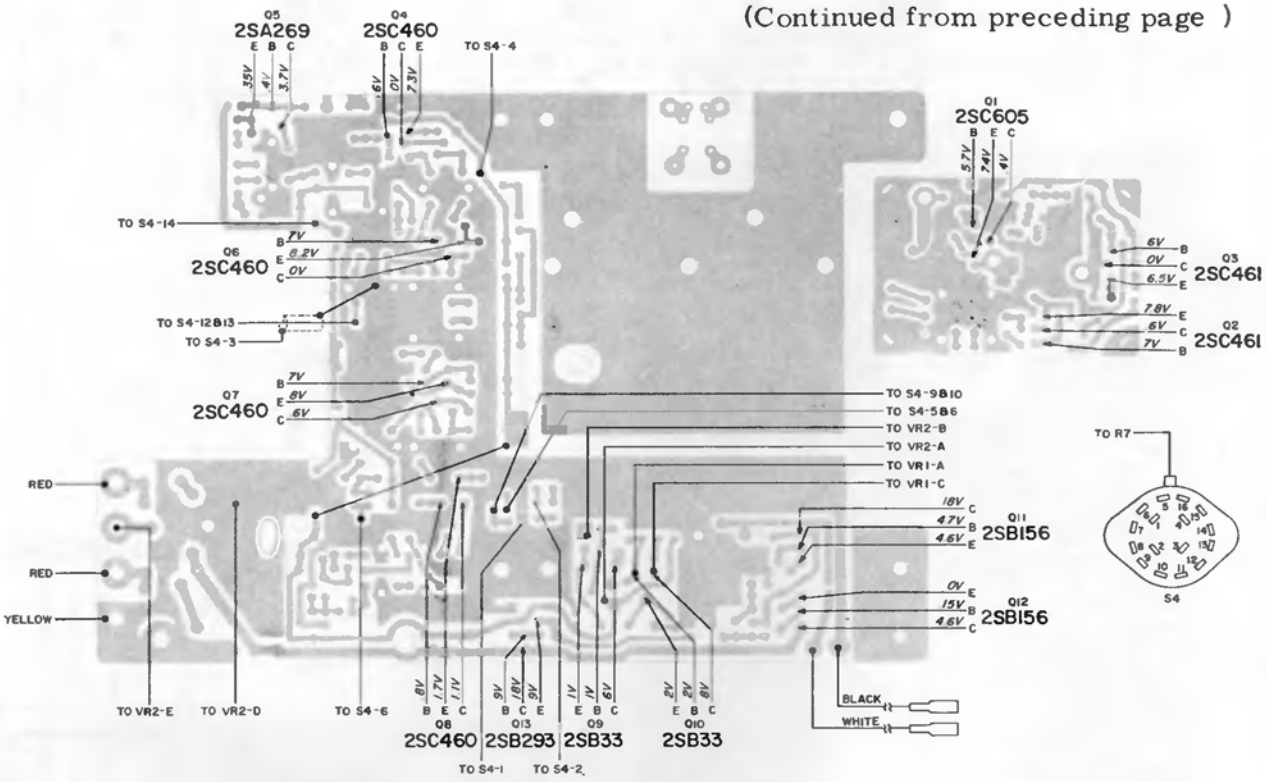


**PRINTED PANEL ASSEMBLY BOTTOM VIEW**

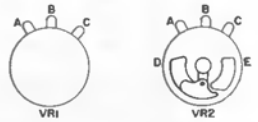


**TOP PARTS LAYOUT - RF BOARD**

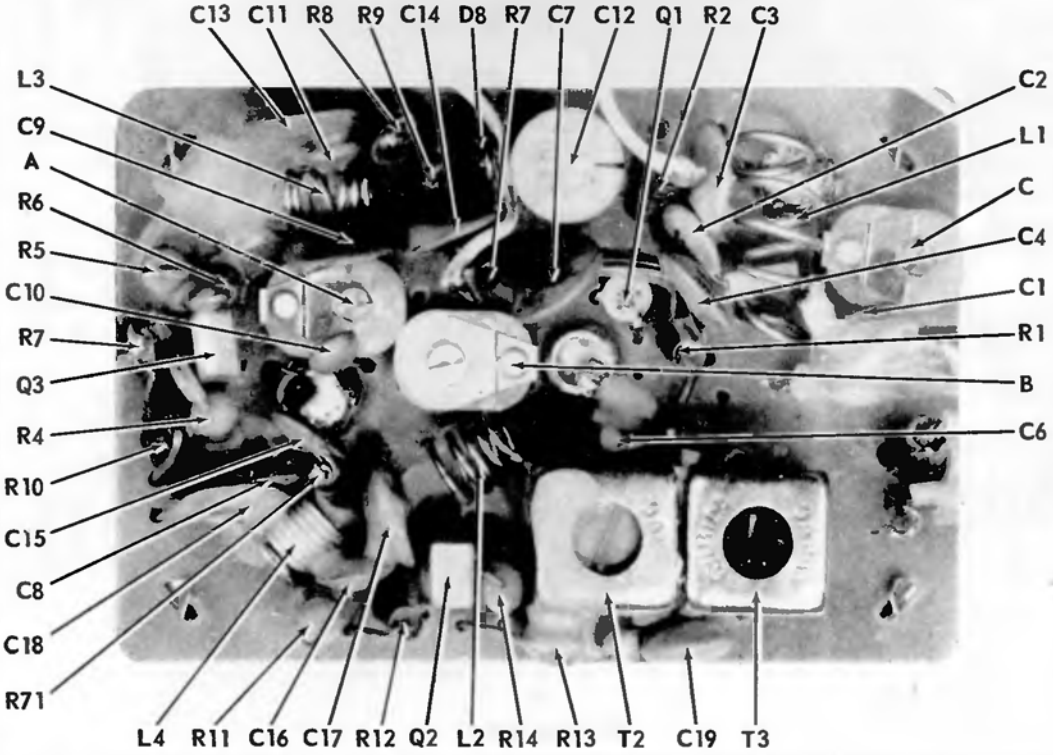

# SYLVANIA Models SK30, SK35, SK40, ST10; Chassis 354-1, 355-1, 358-1, 359-1

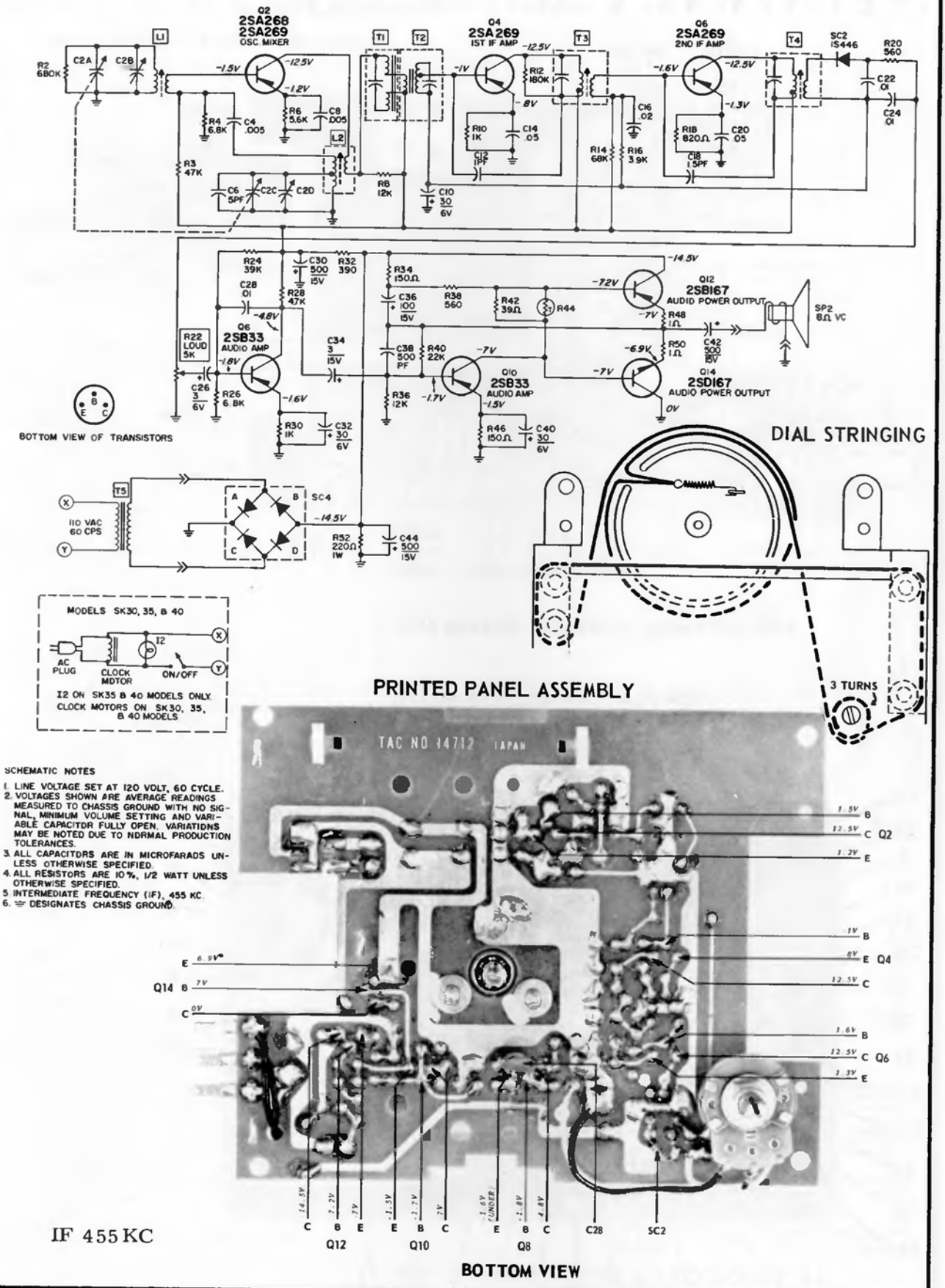


SCHEMATIC NOTES

1. LINE VOLTAGE SET AT 120 VOLT, 60 CYCLE.
2. VOLTAGES SHOWN ARE AVERAGE READINGS MEASURED TO CHASSIS GROUND WITH NO SIGNAL, MINIMUM VOLUME SETTING AND VARIABLE CAPACITOR FULLY OPEN. VARIATIONS MAY BE NOTED DUE TO NORMAL PRODUCTION TOLERANCES.
3. ALL CAPACITORS ARE IN MICROFARADS UNLESS OTHERWISE SPECIFIED.
4. ALL RESISTORS ARE 10%, 1/2 WATT UNLESS OTHERWISE SPECIFIED.
5. INTERMEDIATE FREQUENCY (IF), 455 KC.
6. ⏚ DESIGNATES CHASSIS GROUND.

IF 455 KC

# SYLVANIA

Model TR74; Chassis 328-2

All capacitors in microfarads unless otherwise specified.
Intermediate frequency (IF), 455 KC.
All resistors are 1/4W - 10% unless otherwise specified.

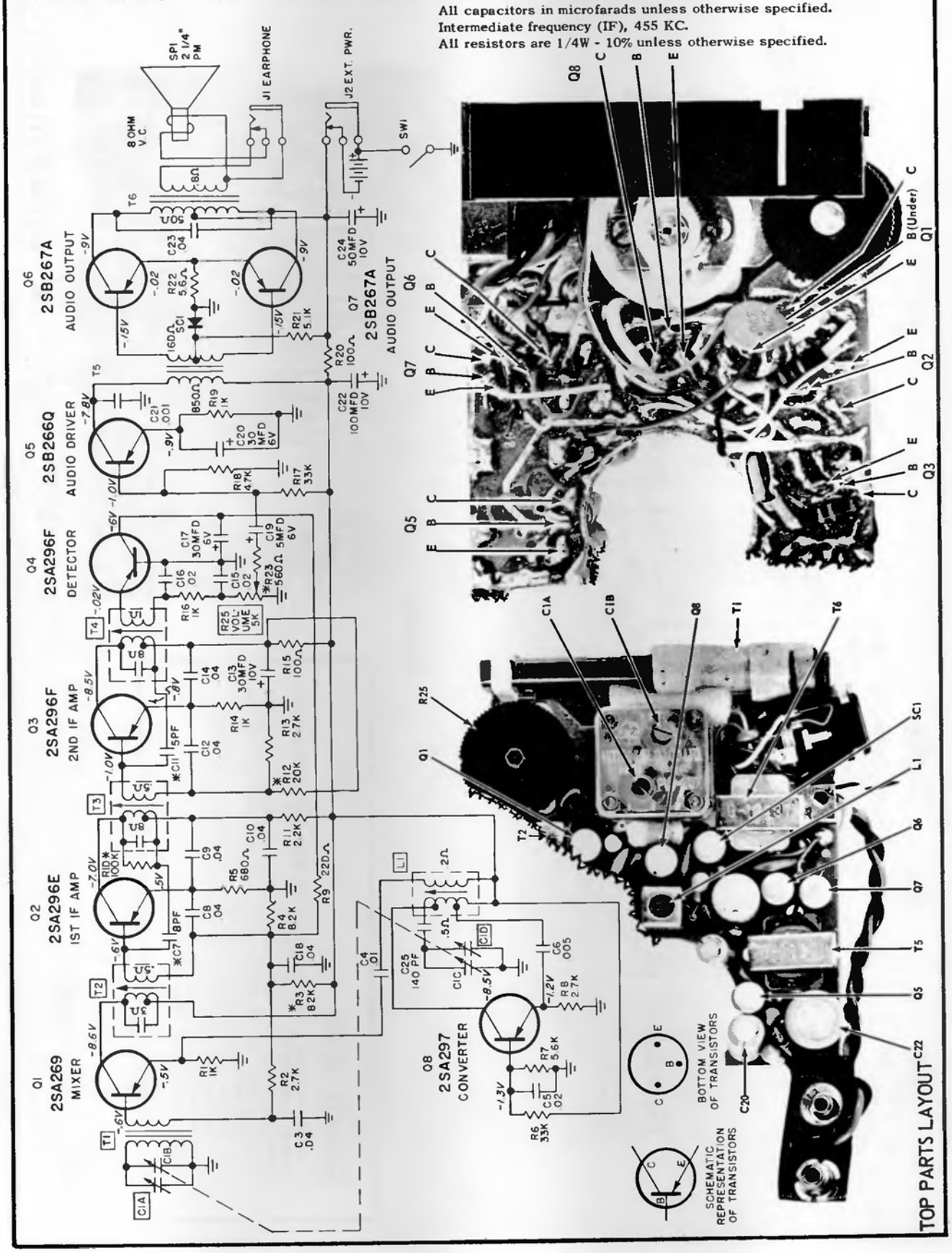

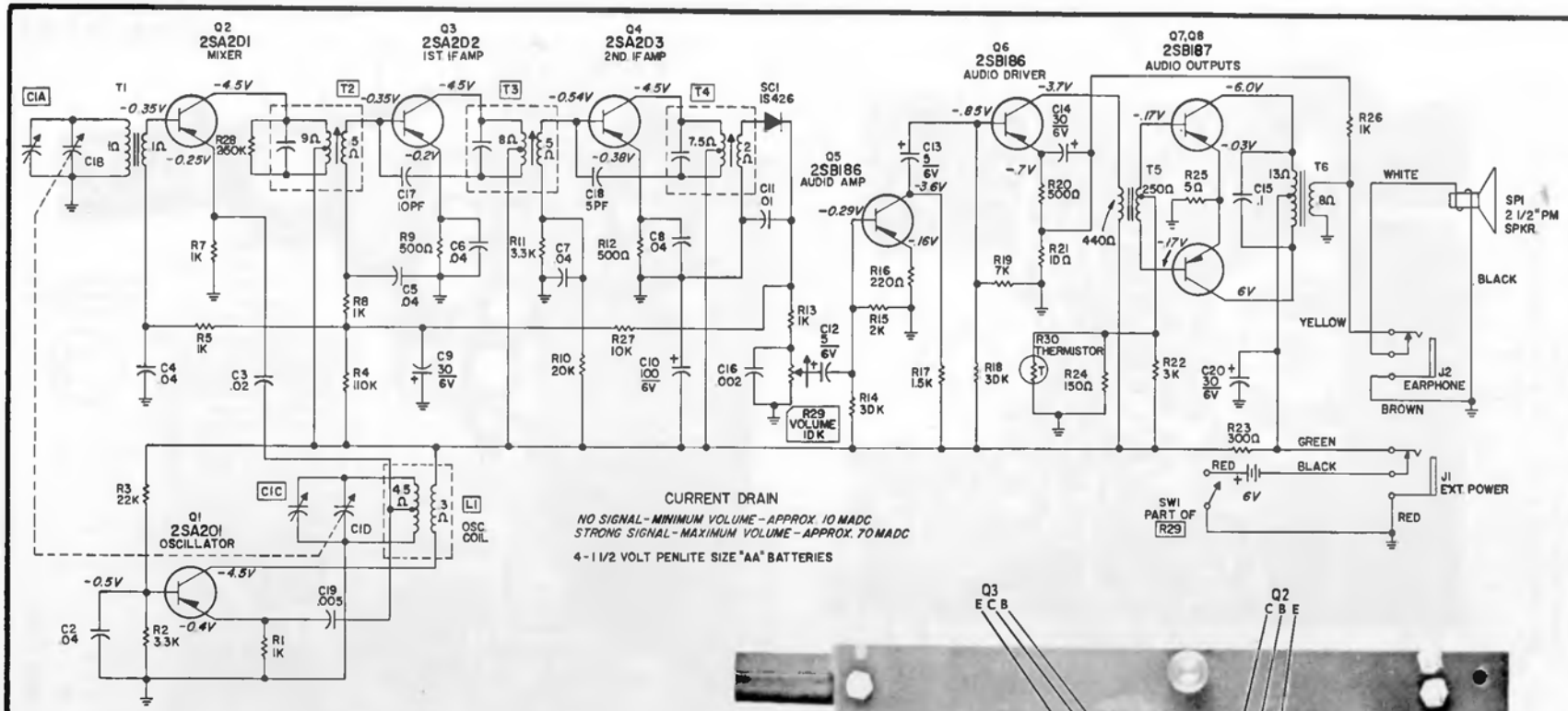


## SCHEMATIC NOTES

1. Voltage measured to chassis ground, test point (G), with receiver tuned to off station and full volume.
2. Operating voltage must be 6 volts DC. (Employ battery eliminator).
3. Voltages shown are average readings. Variations may be noted due to normal production tolerance (±10%).
4. All voltage readings taken with RCA Volt-Ohmyst (WV - 97A).
5. All capacitors in microfarads unless otherwise specified.
6. Intermediate frequency (IF), 455 KC.
7. Resistance readings taken with components in circuit.

IF 455 KC

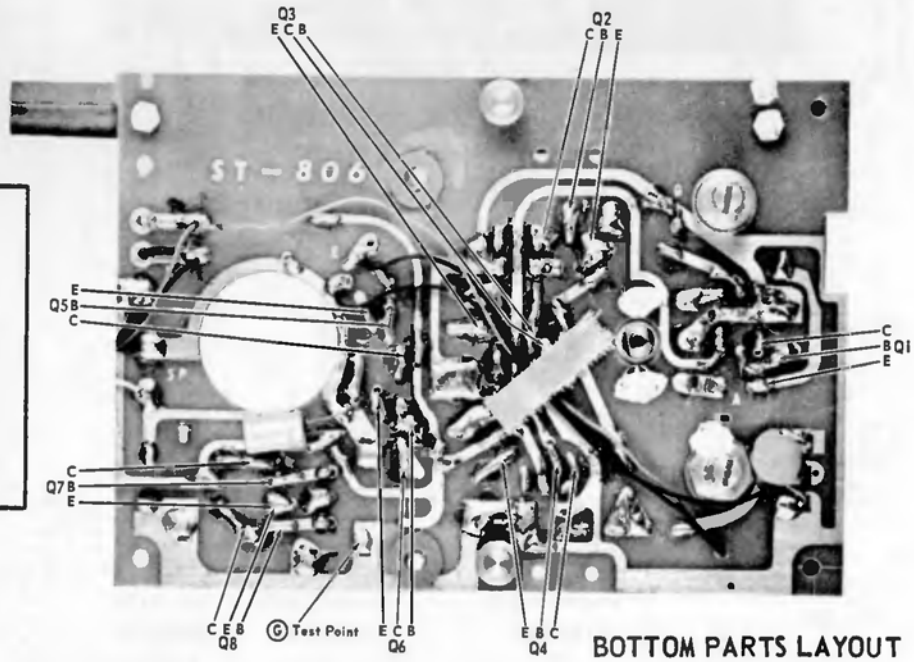


BOTTOM PARTS LAYOUT

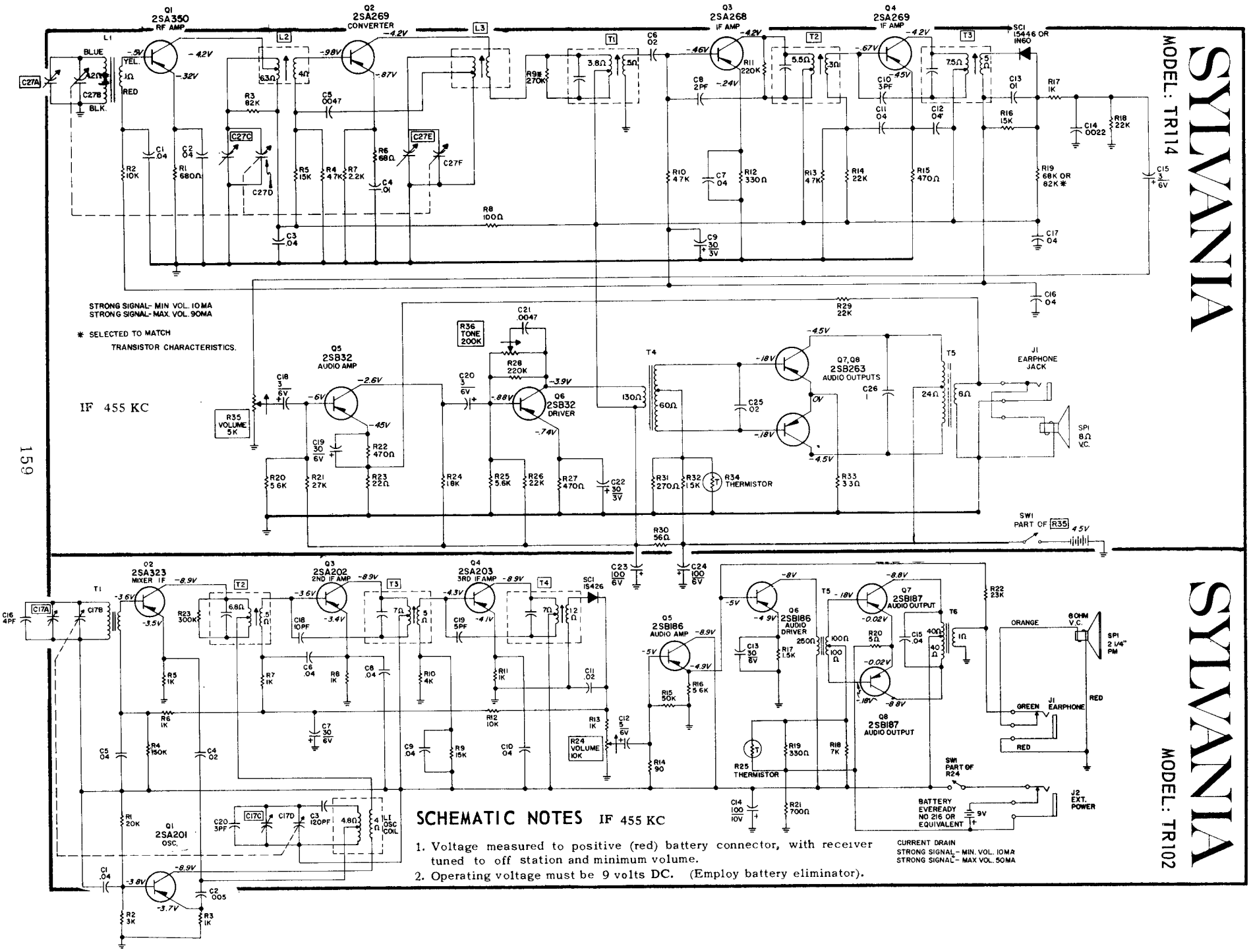


## SCHEMATIC NOTES IF 455 KC

1. Voltage measured to positive (red) battery connector, with receiver tuned to off station and minimum volume.
2. Operating voltage must be 9 volts DC. (Employ battery eliminator).

# SYLVANIA MODEL: TR122

AM IF 455KC
FM IF 10.7MC

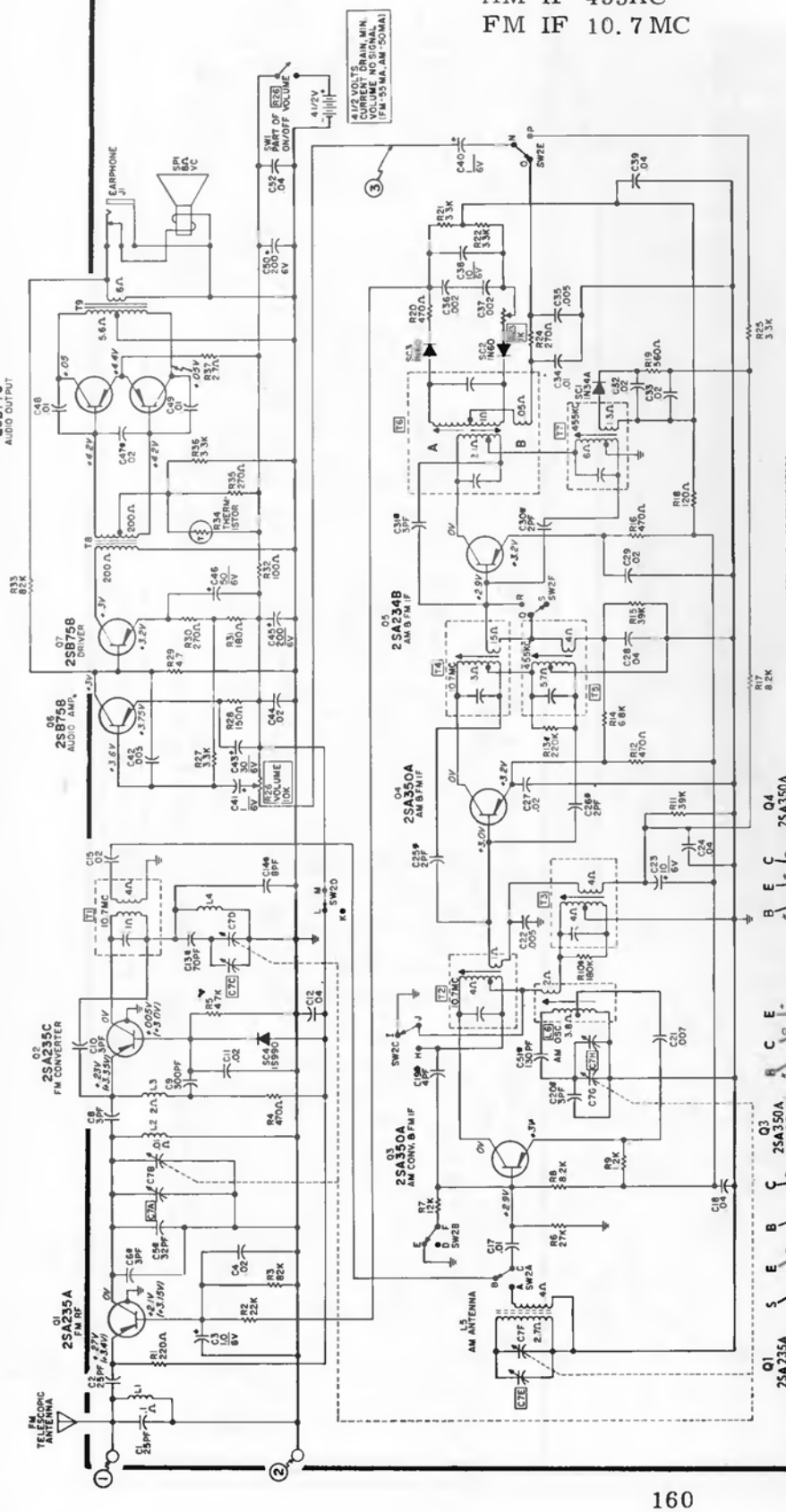


## SCHEMATIC NOTES

1. Voltages measured to chassis ground, test point (2), with receiver tuned to off station and minimum volume.
2. Operating voltage must be 4.5 volts DC. (Employ battery eliminator).
3. Voltages shown are average readings. Voltages in brackets are measured with switch in FM position.
4. Switch SW2 is shown in the FM position.
5. All capacitors in microfarads unless otherwise specified.
6. All resistors are 1/4W - 10% unless otherwise specified.
7. Resistance readings taken with components in circuit.
*8. Values selected to match transistor characteristics.

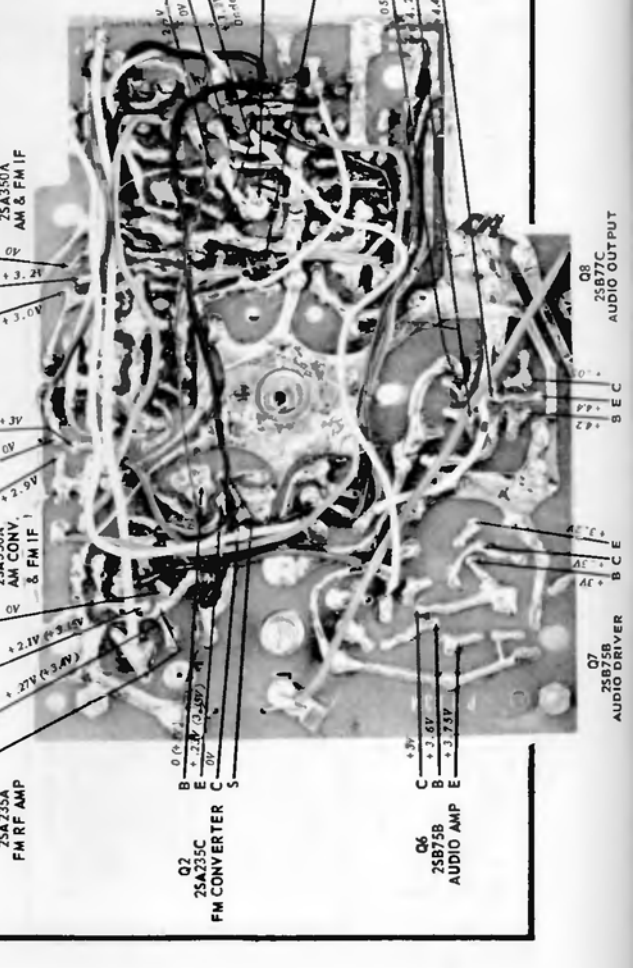

# SYLVANIA Model TR125; Chassis 350-1

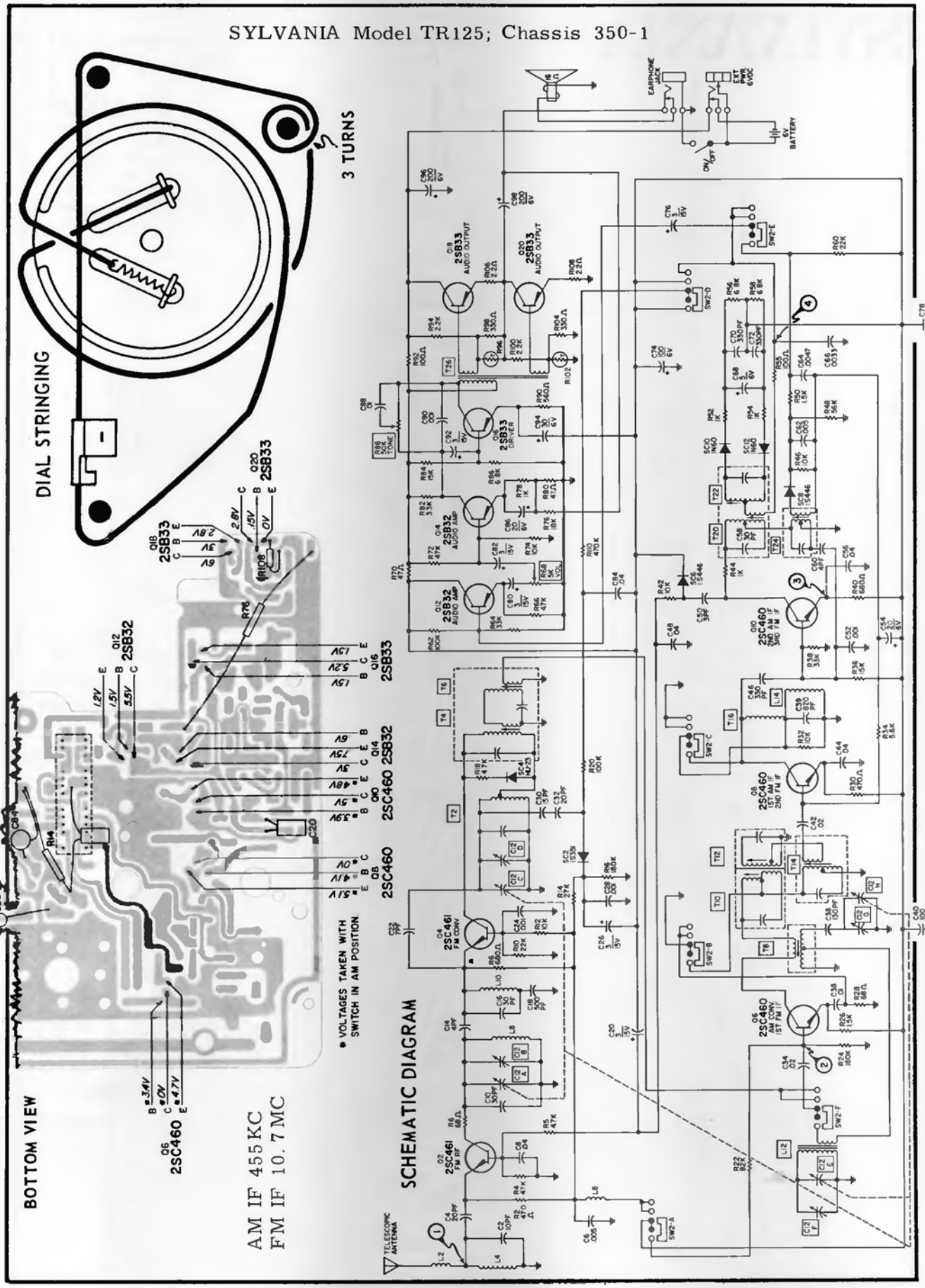

# SYLVANIA

Models: Exponent 4/20, 4/30 Series; Chassis P05-1, -2

(Continued on next page.)

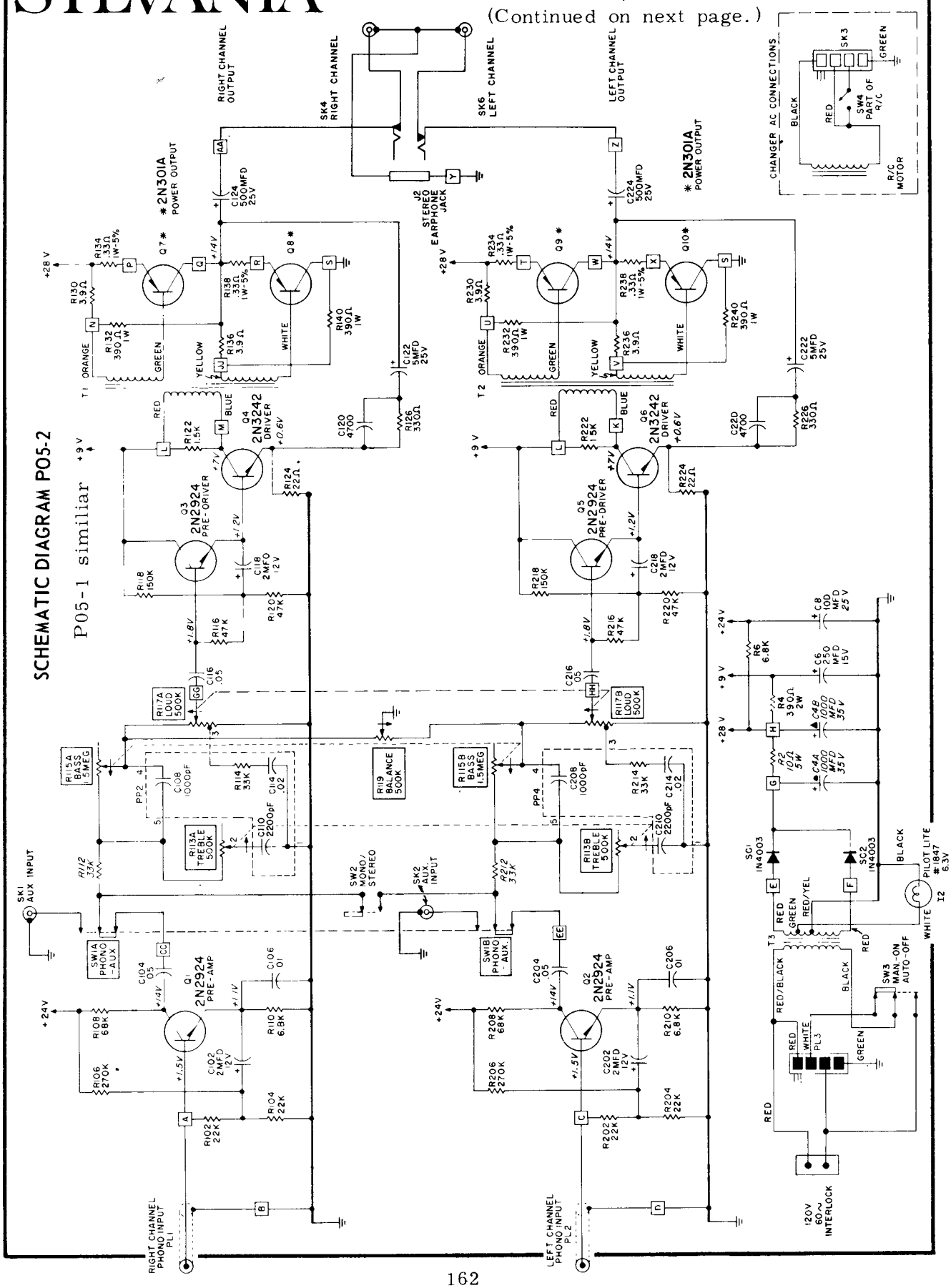

(Continued from preceding page.)

**NOTE:**

1. Voltage measurements are average readings measured to chassis ground with no signal input. Variations may be noted due to normal production tolerances.
2. See schematic diagram on page 5 for voltage readings on power output transistors (Q7,Q8,Q9,Q10).

BOTTOM VIEW OF TRANSISTORS

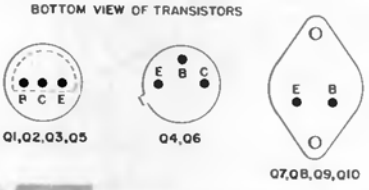


## PRINTED BOARD PARTS LAYOUT

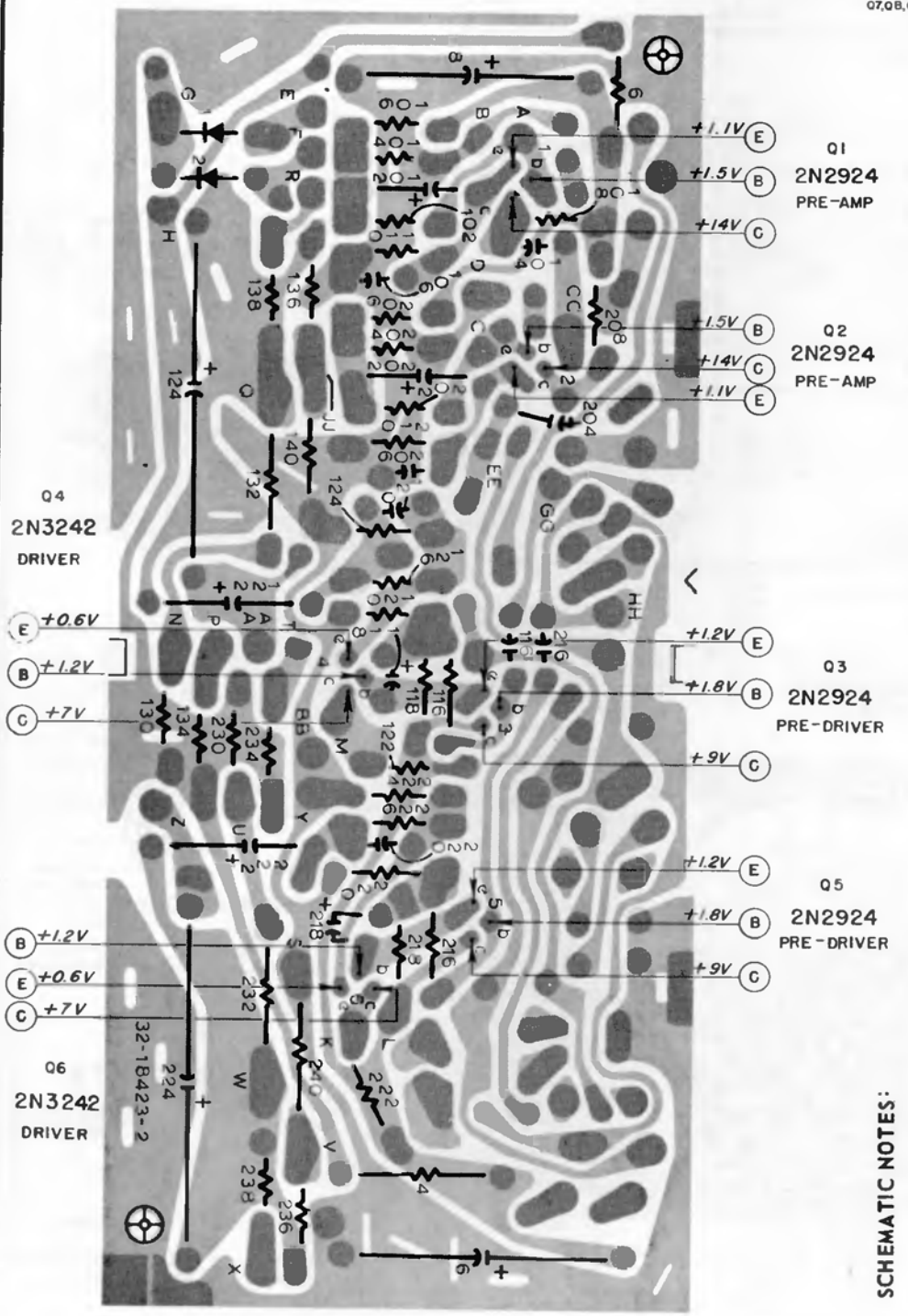


5. All resistors are 1/2W, 10% unless otherwise specified.
6. ⏚ Designates chassis ground.
7. ● Indicates color dot on speakers for correct phasing.
8. R113, R115, R117 are dual ganged controls.
9. ✱ Indicates replace in matched pairs.
10. Arrows on controls indicates clockwise rotation.

**SCHEMATIC NOTES:**

1. Voltage measurements are average reading measured to chassis with no signal input. Variations may be noted due to normal production tolerances.
2. AC power source 120 volt, 60 cycle.
3. Capacitance in MFD unless otherwise specified.
4. Resistors and capacitors not on printed circuit board are shown in italics.

# SYLVANIA

MODEL: 45P80
CHASSIS: P02-5

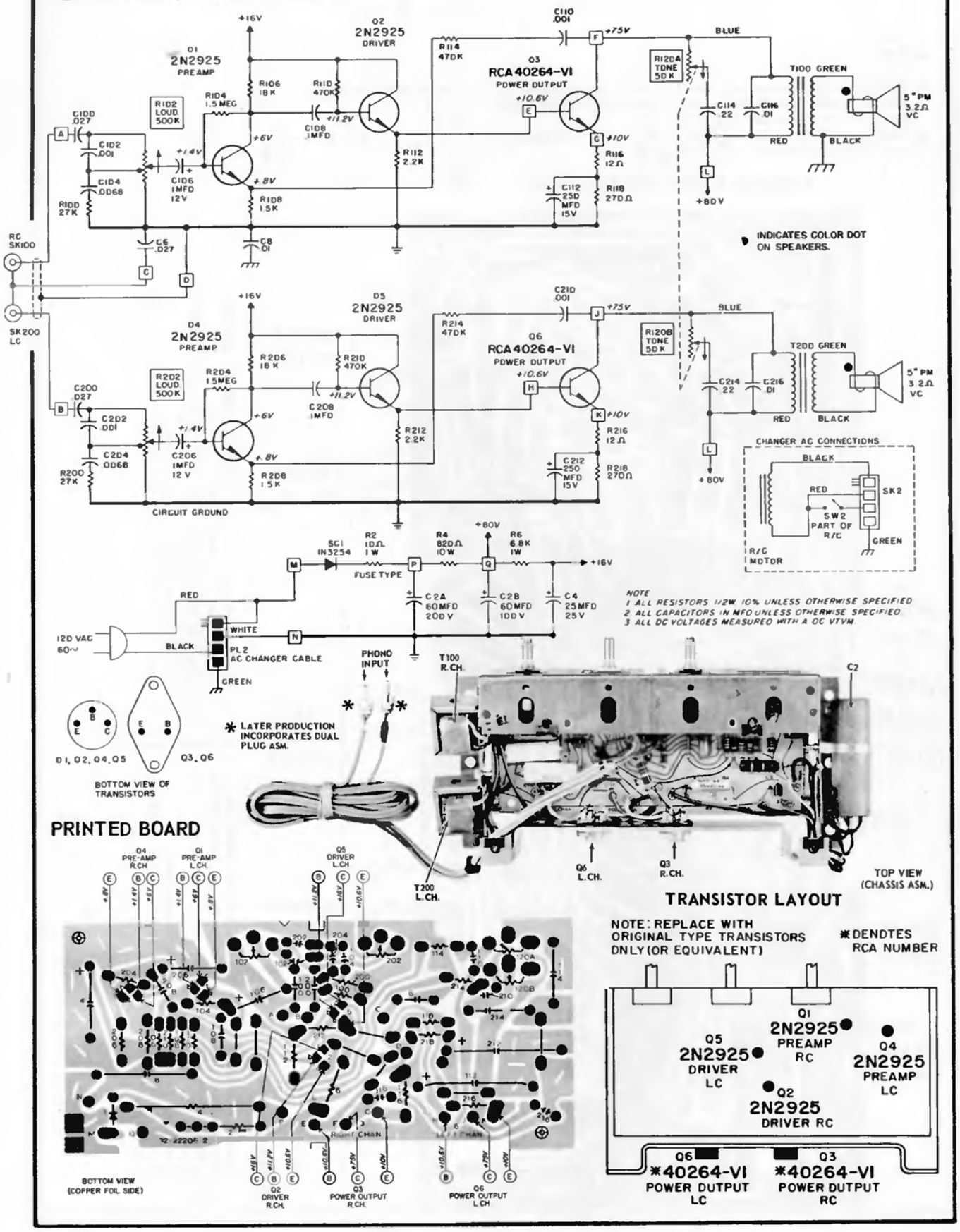

# SYLVANIA

**MODEL: 45P84**
**CHASSIS: P03-5**

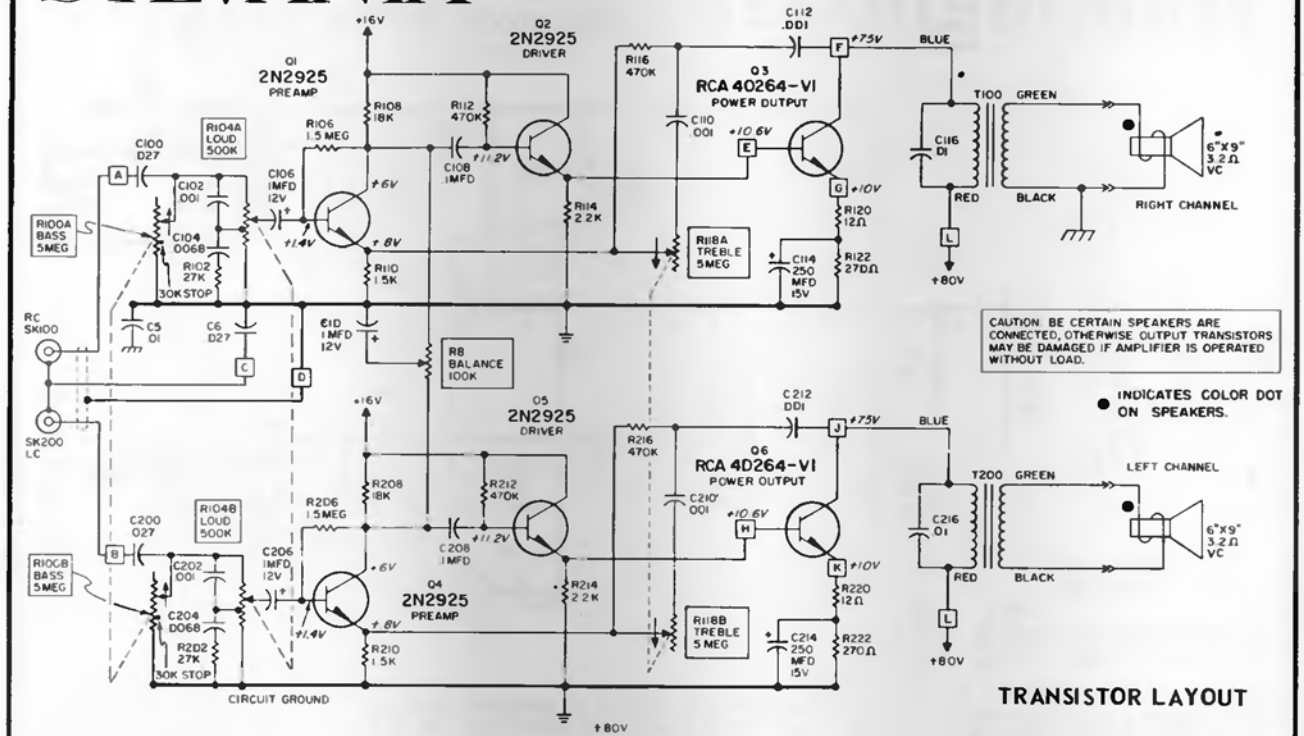


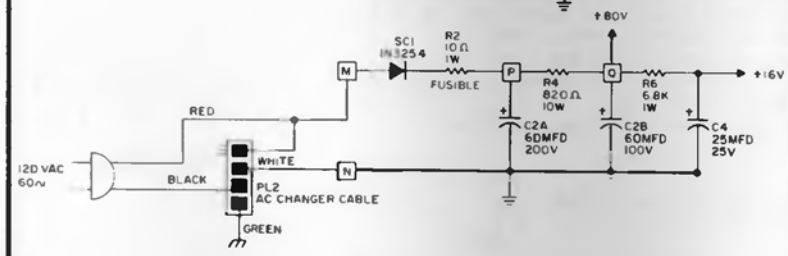


NOTE
1. ALL RESISTORS 1/2W 10% UNLESS OTHERWISE SPECIFIED
2. ALL CAPACITORS IN MFD UNLESS OTHERWISE SPECIFIED
3. ALL DC VOLTAGES MEASURED WITH A DC VTVM

## TRANSISTOR LAYOUT

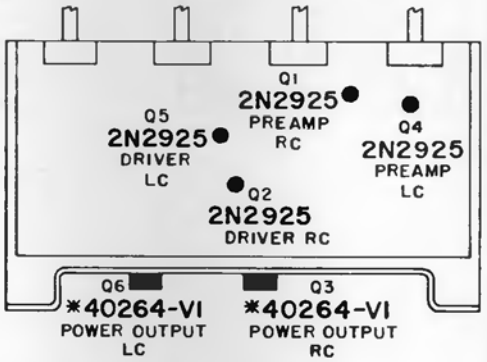


*DENOTES RCA NUMBER

## NOTE:

Voltage measurements are average readings to circuit ground with no signal input. Variations may be noted due to normal production tolerances.

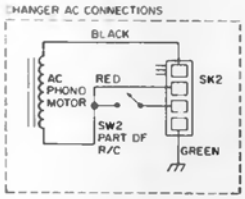


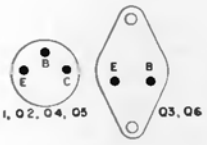


BOTTOM VIEW OF TRANSISTORS

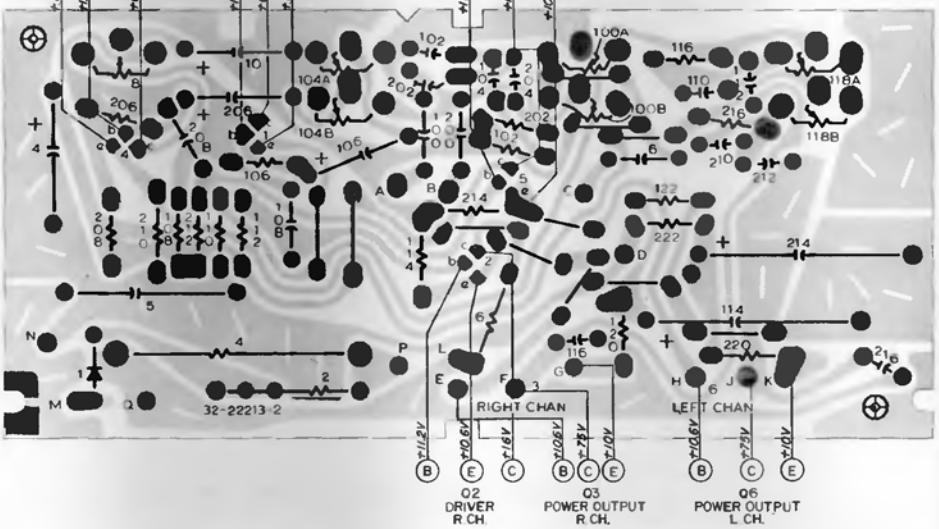


## BOTTOM VIEW (COPPER FOIL SIDE)

# Westinghouse

## PAM 7000A CHASSIS V4005C01

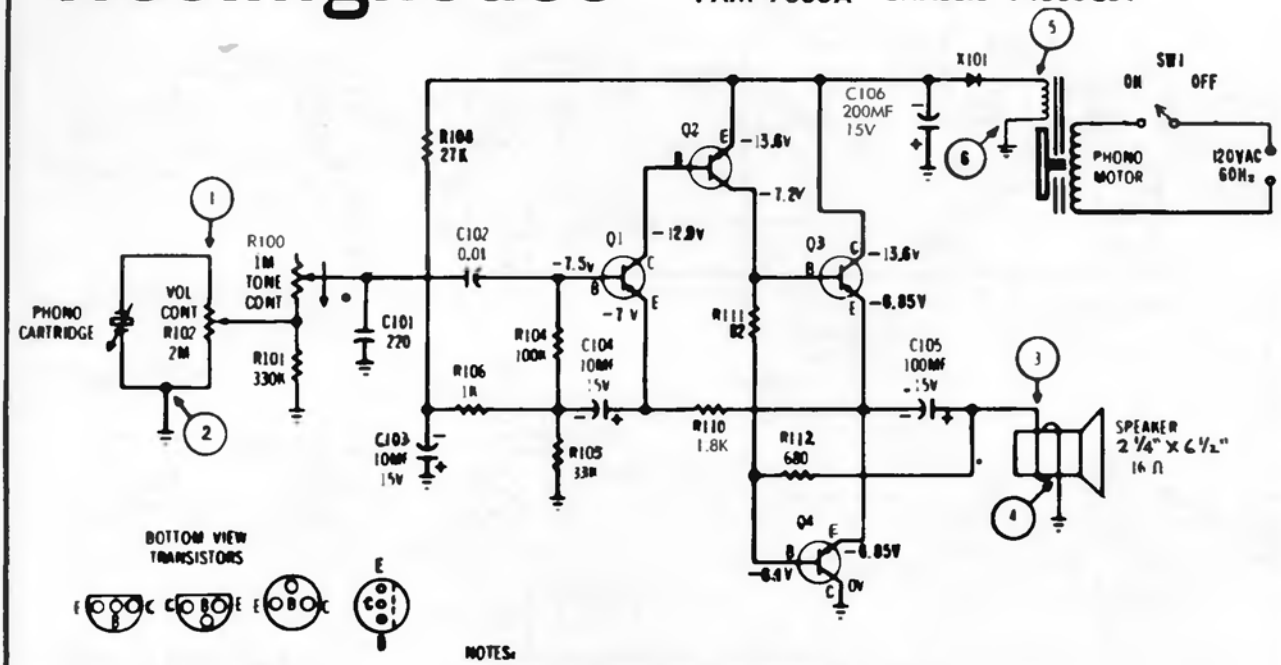


| TRANSISTOR COMPLEMENT | | | |
|---|---|---|---|
| | FUNCTION | TYPE | W PART NO. |
| Q1 | INPUT | PNP | 297V083C01 |
| Q2 | DRIVER | NPN | 297V083C02 |
| Q3 | OUTPUT | PNP | 297V083C03 |
| Q4 | OUTPUT | NPN | 297V083C04 |

NOTES:

1. UNLESS OTHERWISE INDICATED ALL CAPACITANCE VALUES LESS THAN 1 ARE IN MF AND VALUES GREATER THAN 1 ARE IN PF, ALL RESISTANCE VALUES ARE IN OHMS, 1/2 WATT.
2. VOLTAGE MEASUREMENTS MADE WITH A VTVM FROM POINTS INDICATED TO GROUND, VOLUME CONTROL AT MINIMUM, LINE VOLTAGE AT 120VAC.

• DIRECTION OF ARROW INDICATES MAXIMUM TREBLE.

○ DENOTES CONNECTIONS ON PC BOARD.

Cartridge Wiring

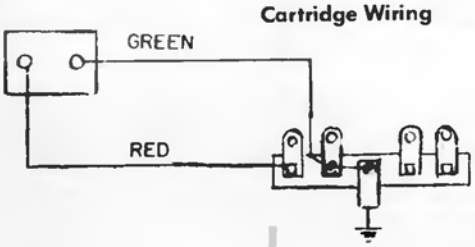


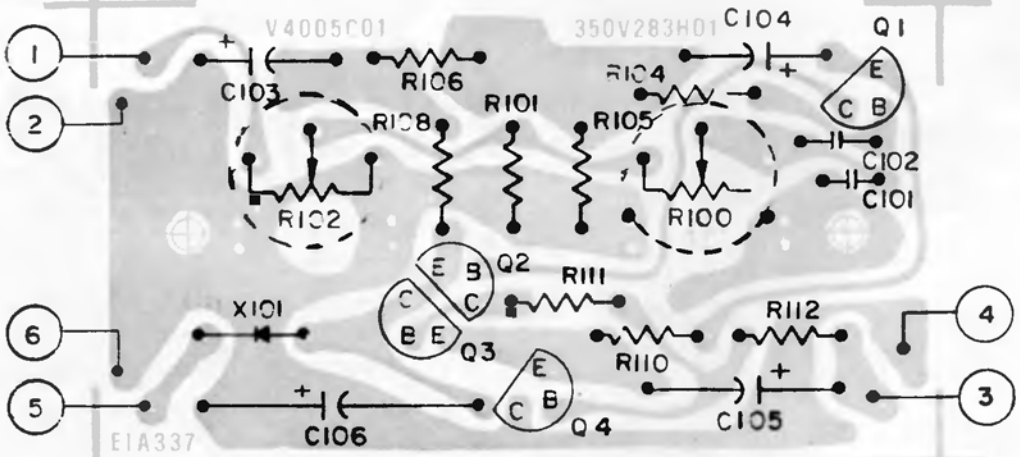


○ DENOTES CONNECTIONS ON SCHEMATIC

WESTINGHOUSE Models RC42N08A
RC42N28A
RT32N08A, B
RT32N38A

Chassis V2577-1, 2, 3, 4

AM IF 455 KC, FM IF 10.7 MC

NOTES:
1. UNLESS OTHERWISE INDICATED, ALL CAPACITANCE VALUES LESS THAN 1 ARE IN MF, AND ALL VALUES GREATER THAN 1 ARE IN PF, ALL RESISTANCE VALUES ARE IN OHMS 0.5 WATT.
2. VOLTAGE MEASUREMENTS MADE WITH VTVM FROM POINTS INDICATED TO CIRCUIT GROUND WITH TUNING CAPACITOR AT MAX. VOLUME CONTROL AT MIN (NO SIGNAL INPUT) LINE VOLTAGE SET AT 120 VAC.
3. UNDERLINED VOLTAGES TAKEN IN FM POSITION.
4. RESISTANCE MEASUREMENTS TAKEN WITH COMPONENTS IN CIRCUIT.
*ON CLOCK MODELS, SWITCH SW1 IS PART OF CLOCK NON CLOCK MODELS SWITCH SW1 IS PART OF VOLUME CONTROL R33.

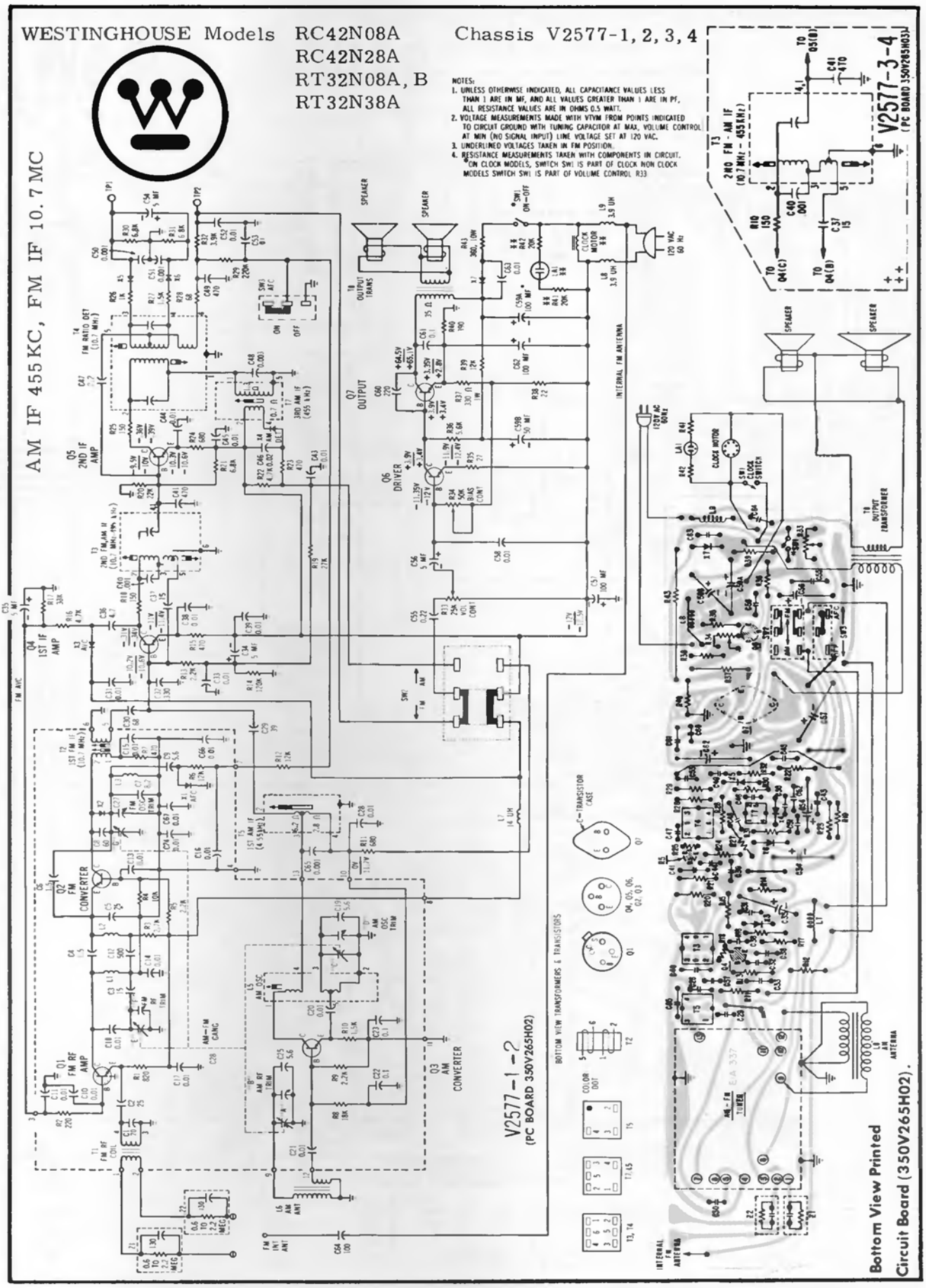

WESTINGHOUSE Models: RC42R67B, 42R87B, 52R07B, RT42R37B, 42R87B  Chassis: V3004CO1, 2, 3, 4

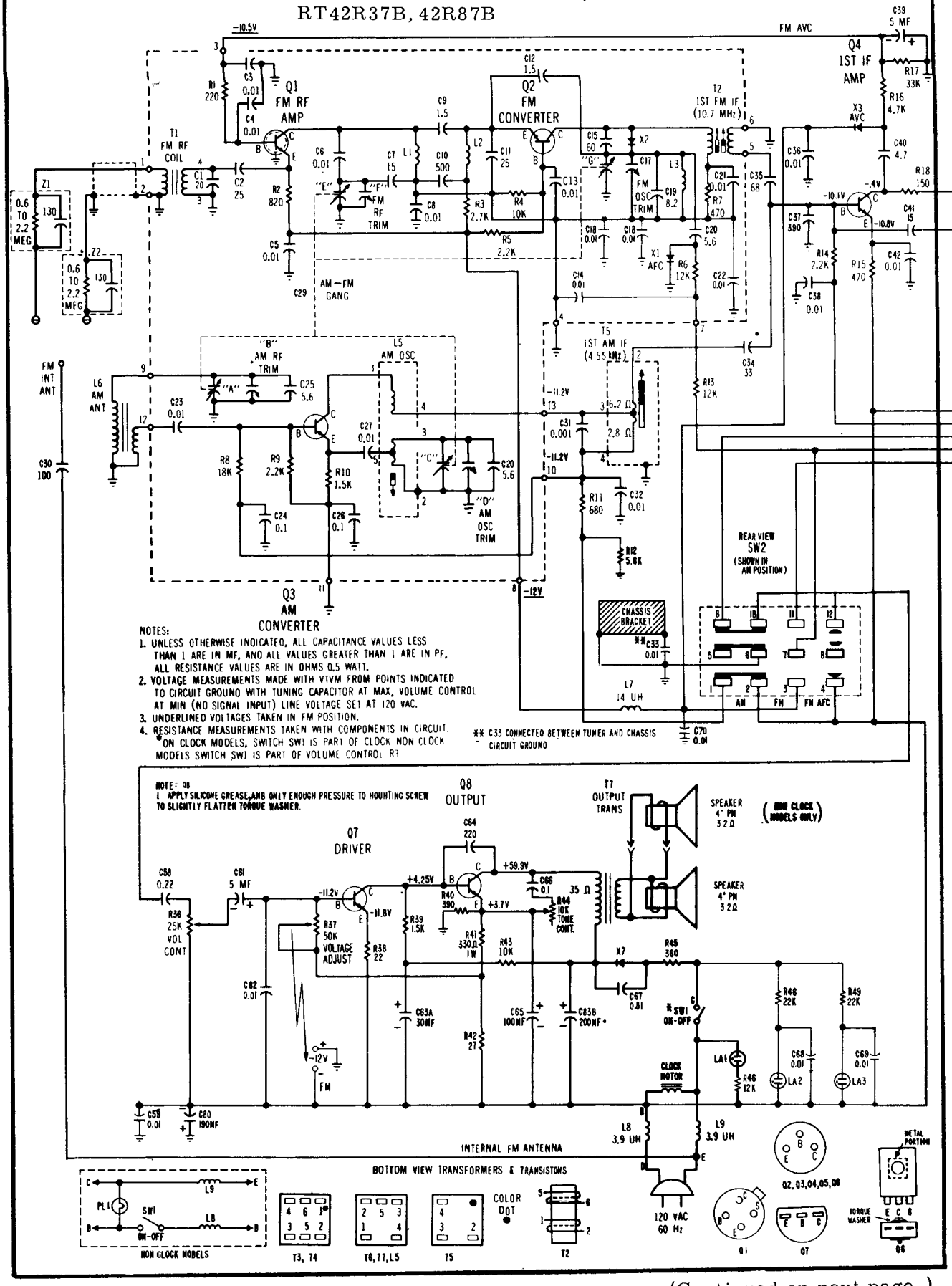




(Continued on next page.)

# Westinghouse

Models: RC42R67B, 42R87B, 52R07B, RT42R37B, 42R87B;

Chassis V3004C01, 2, 3, 4

(Continued from preceding page.)

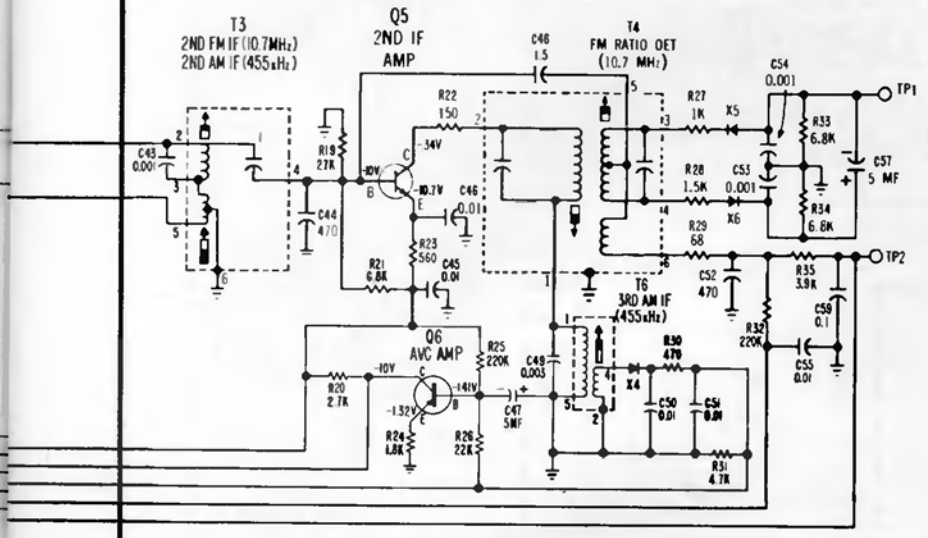


AM IF 455 KC
FM IF 10.7 MC

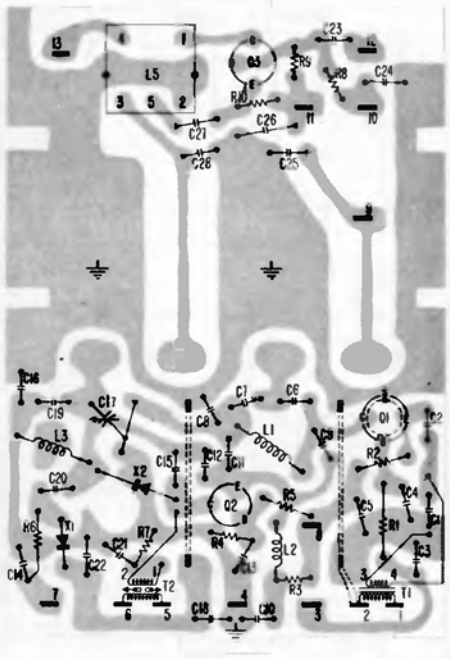

Figure 7 — Bottom View Tuner

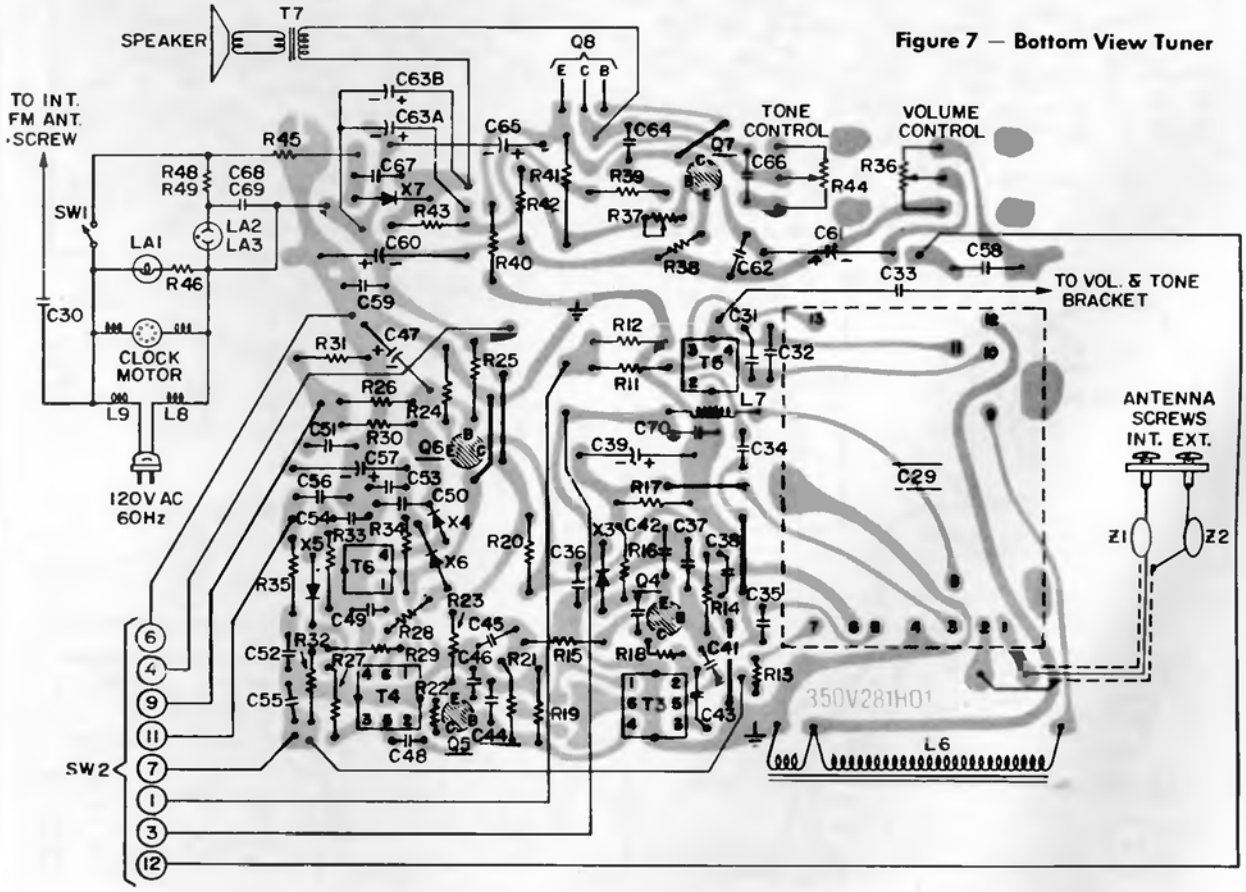


Figure 9 — Bottom View PC Board 350V281H01

# WESTINGHOUSE Models H-972XLB, H-974XLA; Chassis V-2463-5

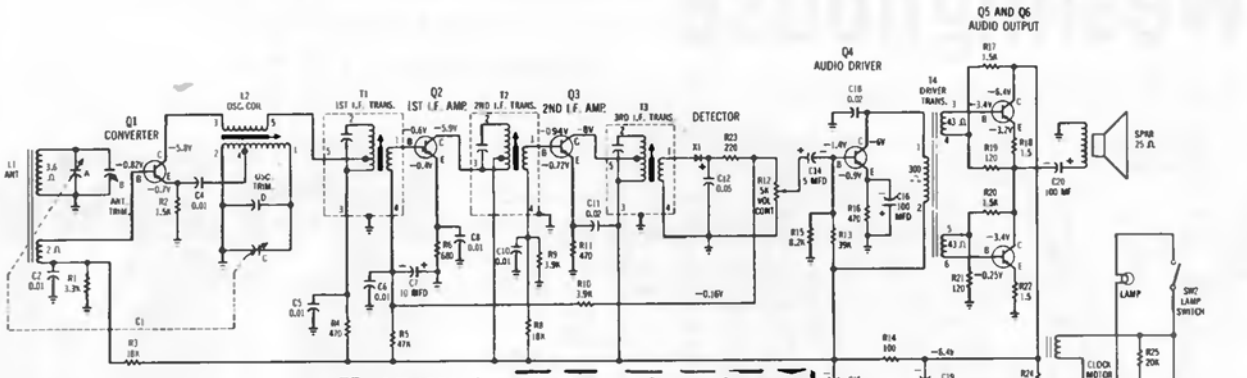


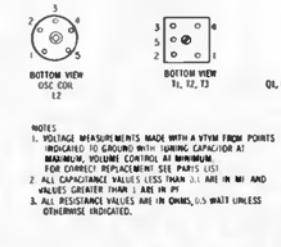


NOTES
1. VOLTAGE MEASUREMENTS MADE WITH A VTVM FROM POINTS INDICATED TO GROUND WITH TUNING CAPACITOR AT MAXIMUM, VOLUME CONTROL AT MINIMUM FOR CORRECT REPLACEMENT SEE PARTS LIST
2. ALL CAPACITANCE VALUES LESS THAN 0.1 ARE IN MF AND VALUES GREATER THAN 1 ARE IN PF
3. ALL RESISTANCE VALUES ARE IN OHMS, 0.5 WATT UNLESS OTHERWISE INDICATED.

H-974XLA

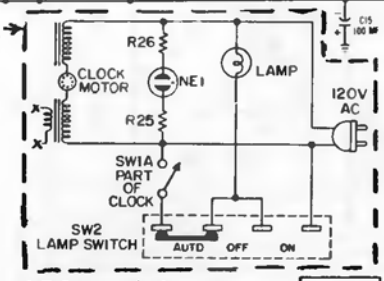


IF 455 KC

**Bottom View of PC Board showing top components in solid outline.**

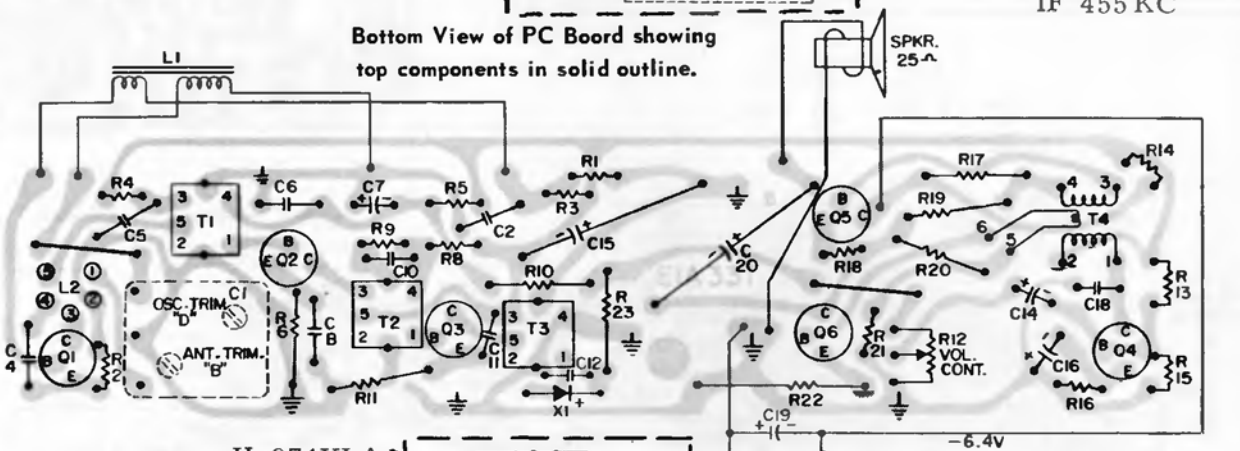


H-974XLA

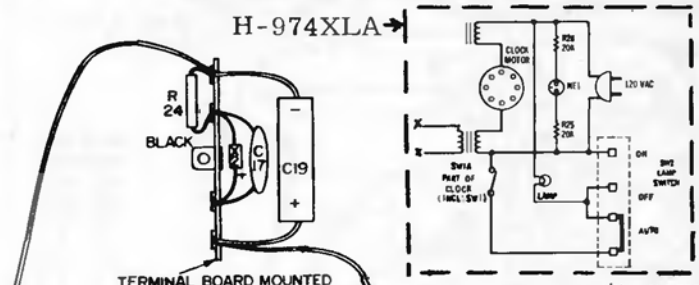


TERMINAL BOARD MOUNTED ON CABINET FRONT

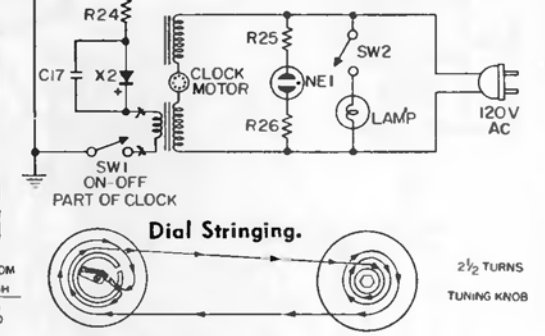


**Dial Stringing.**

1 1/2 TURNS FROM START TO FINISH
TUNING GANG FULLY CLOSED

2 1/2 TURNS
TUNING KNOB

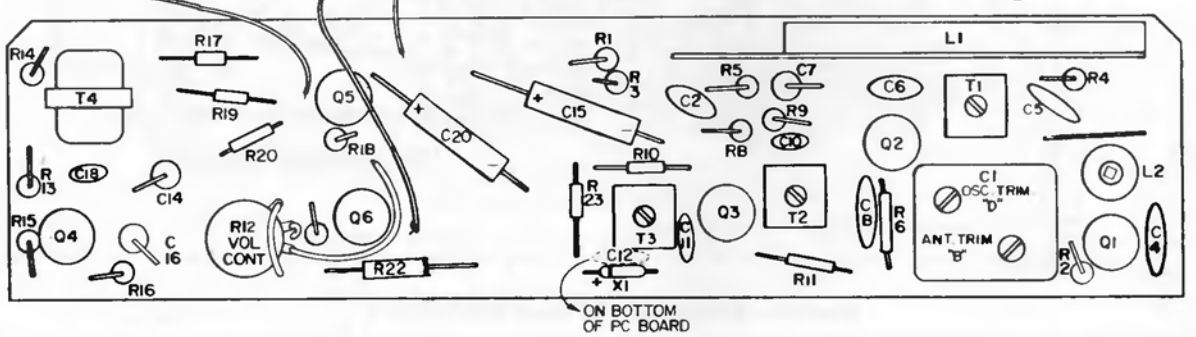

# WESTINGHOUSE Models RLA1160A, 1161A; Chassis V-2463-9
## Models RS31M08A, M38A, M78A; Chassis V-2463-8

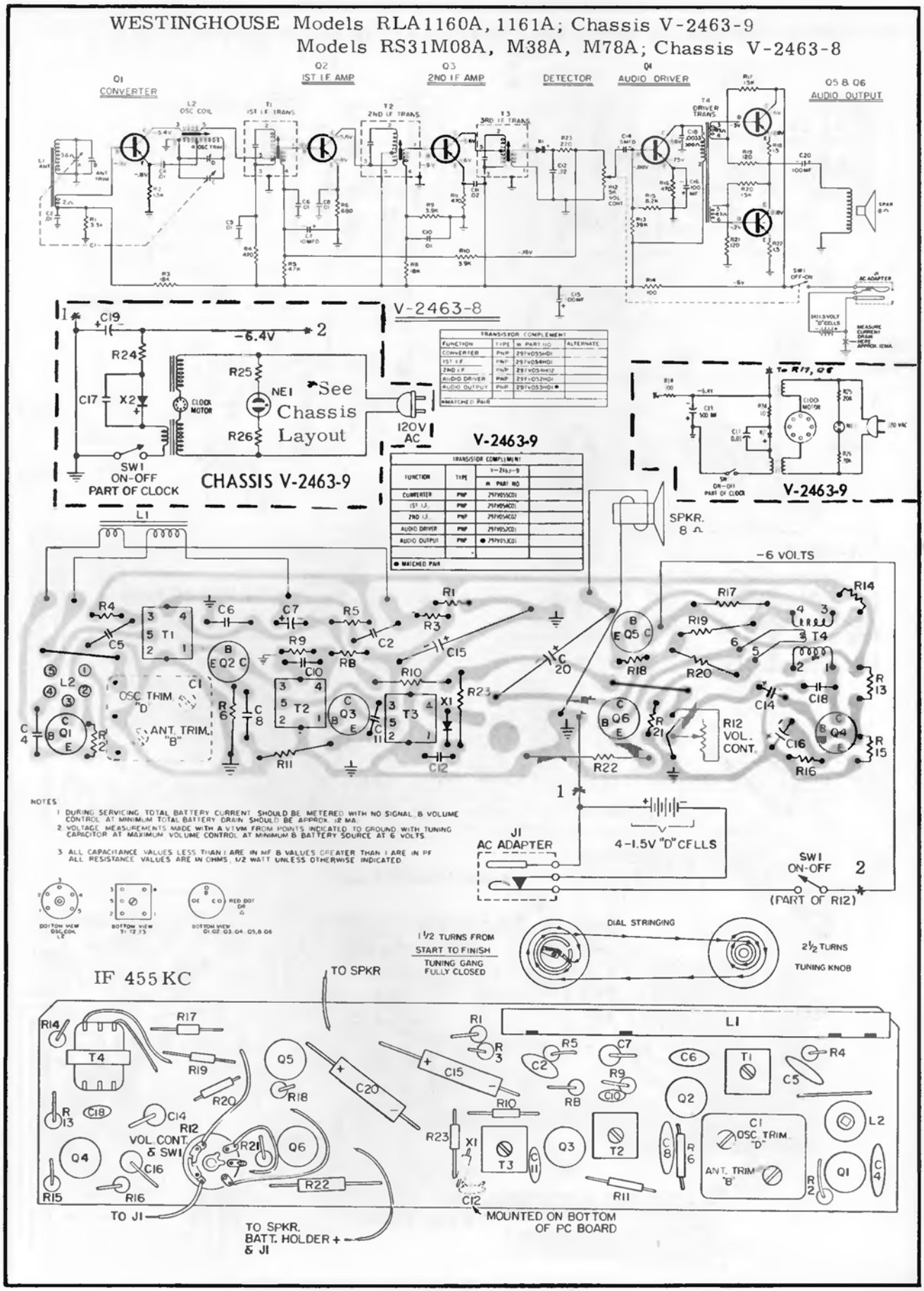

WESTINGHOUSE Models RC31P78A, RT41P58A; Chassis V-2575-3, V-2575-2

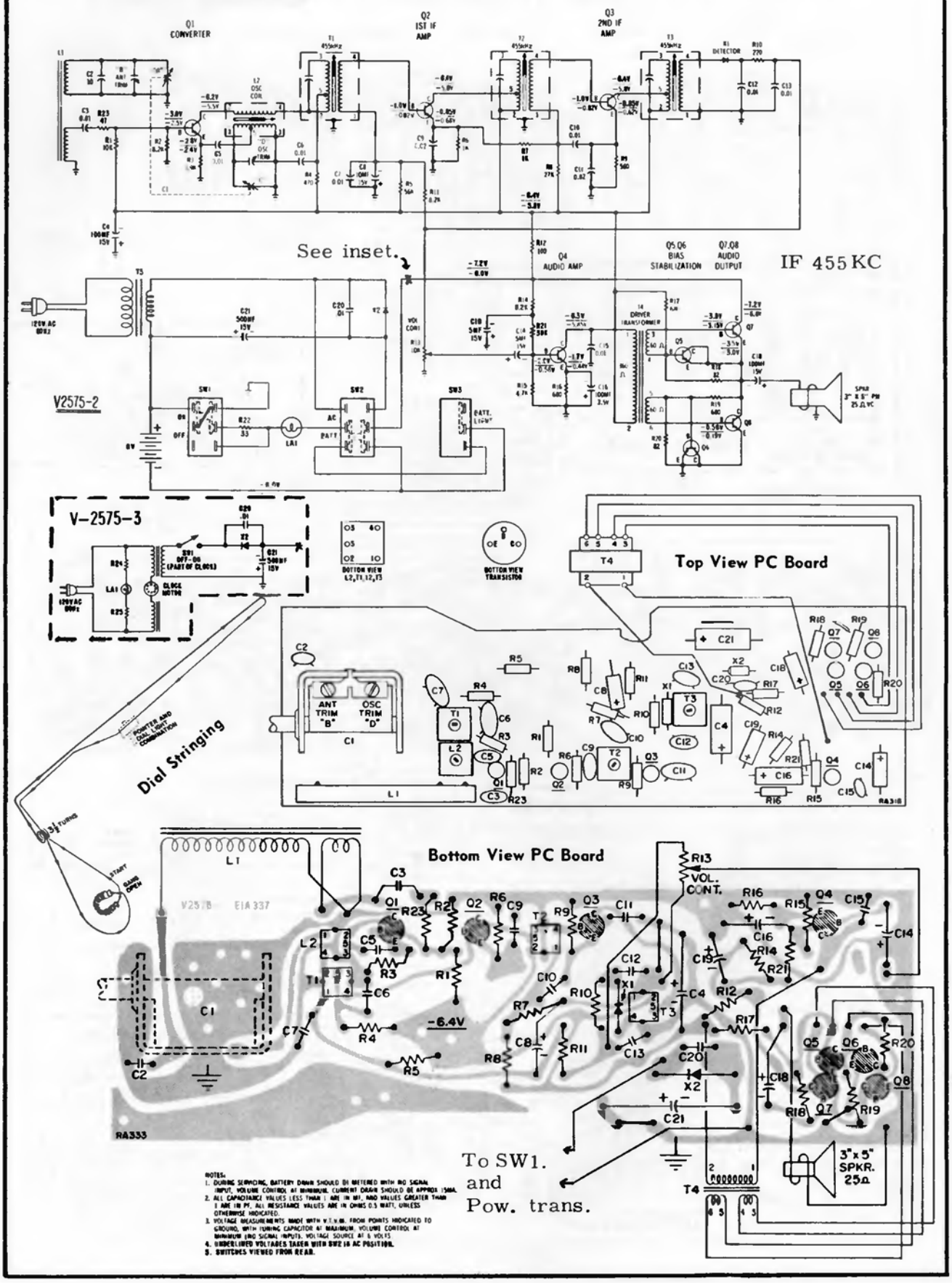


NOTES:
1. DURING SERVICING, BATTERY DRAIN SHOULD BE METERED WITH NO SIGNAL INPUT, VOLUME CONTROL AT MINIMUM. CURRENT DRAIN SHOULD BE APPROX 15MA.
2. ALL CAPACITANCE VALUES LESS THAN 1 ARE IN MF, AND VALUES GREATER THAN 1 ARE IN PF. ALL RESISTANCE VALUES ARE IN OHMS 0.5 WATT, UNLESS OTHERWISE INDICATED.
3. VOLTAGE MEASUREMENTS MADE WITH V.T.V.M. FROM POINTS INDICATED TO GROUND, WITH TUNING CAPACITOR AT MAXIMUM, VOLUME CONTROL AT MINIMUM AND SIGNAL INPUTS. VOLTAGE SOURCE AT 6 VOLTS.
4. UNDERLINED VOLTAGES TAKEN WITH SW2 IS AC POSITION.
5. SWITCHES VIEWED FROM REAR.

WESTINGHOUSE Models RLA1010A, 1010B, 1011A, 1011B, 1020A, 1020B, 1021A, 1021B, 1100B, 1110B, 1120A, RTA3010A, 3010B; Chassis V-2576

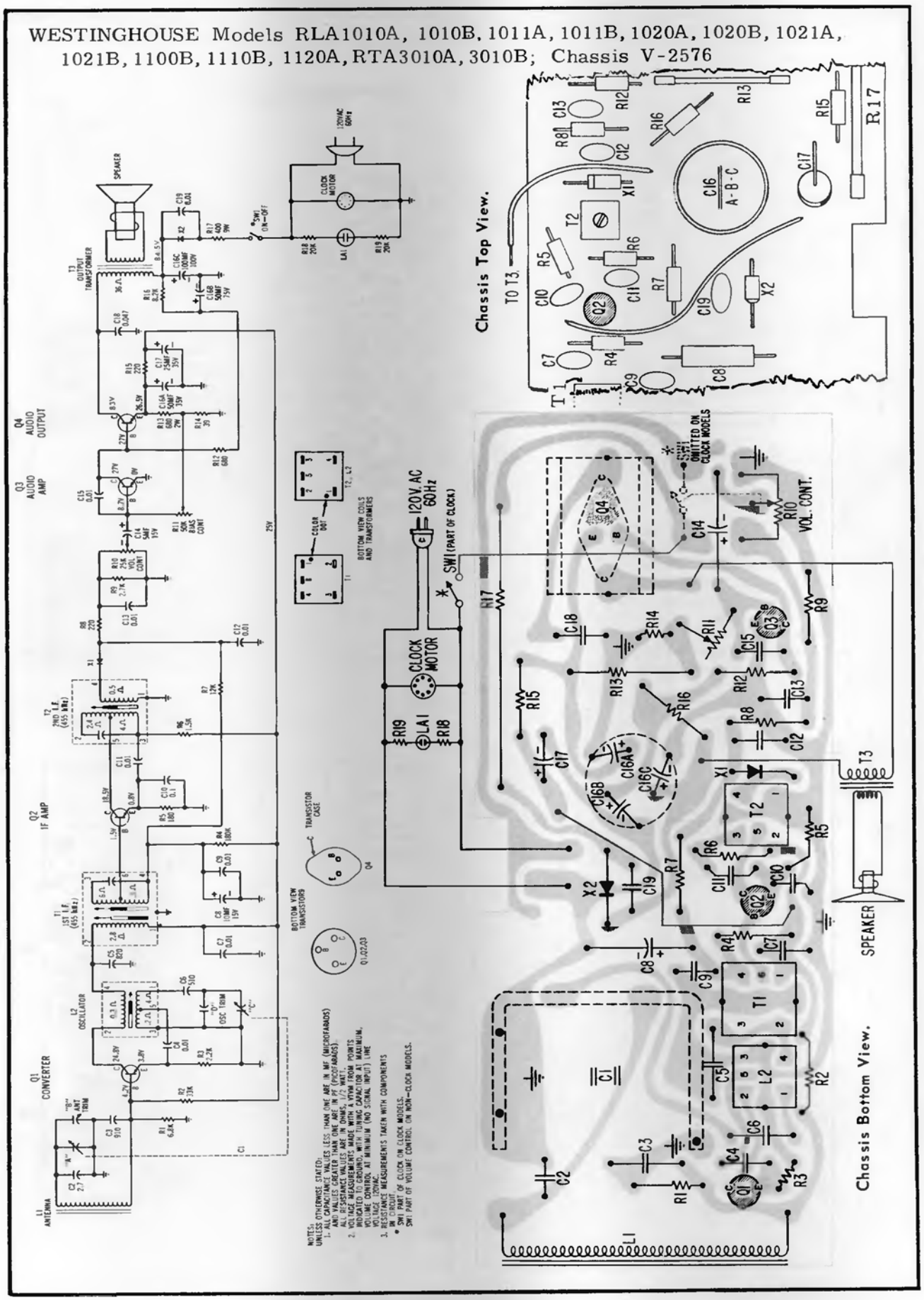

WESTINGHOUSE Model H-926P8GPA; Chassis V-2584-2

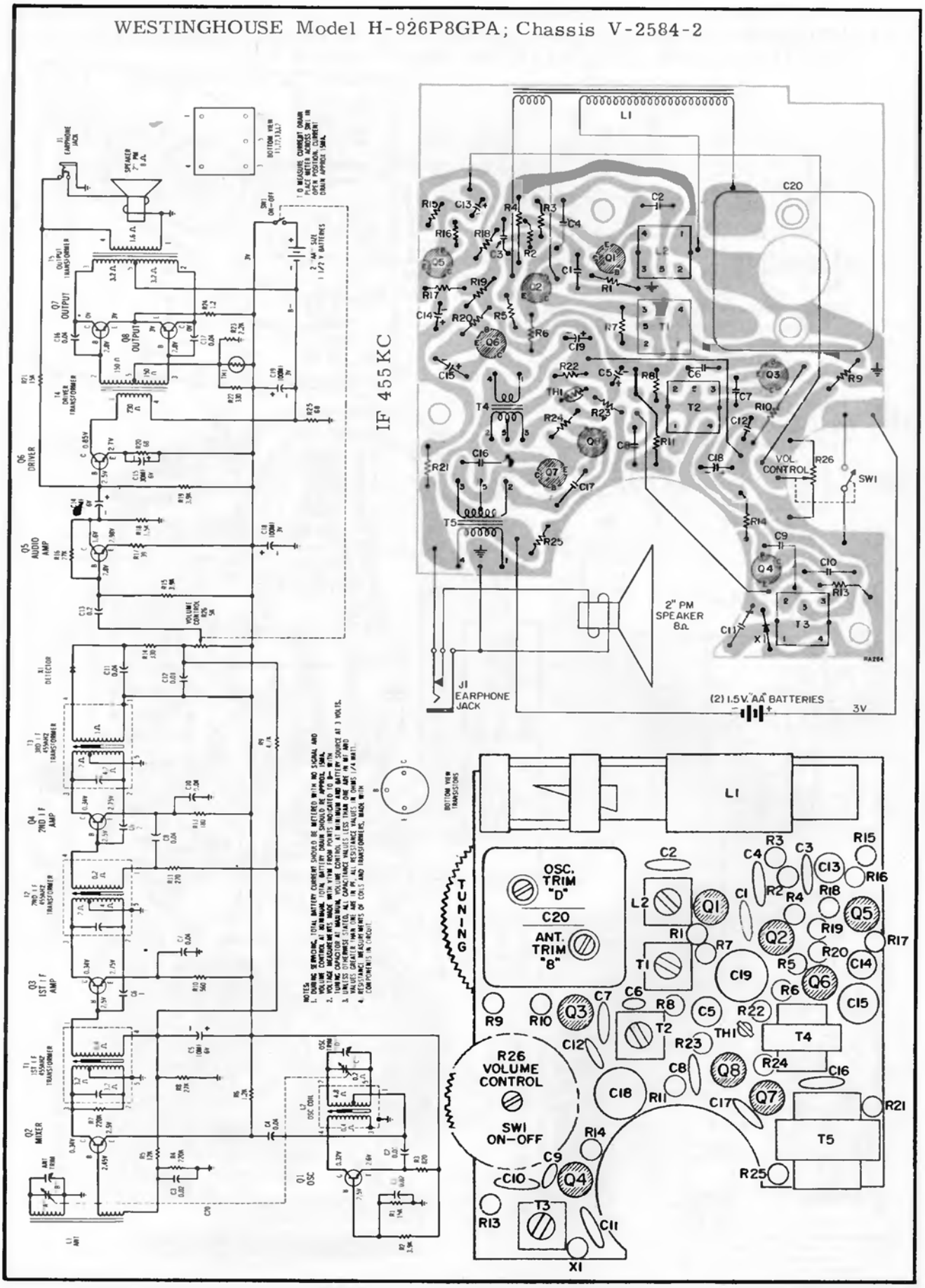

# WESTINGHOUSE Model PS70E170; Chassis V-2684-1

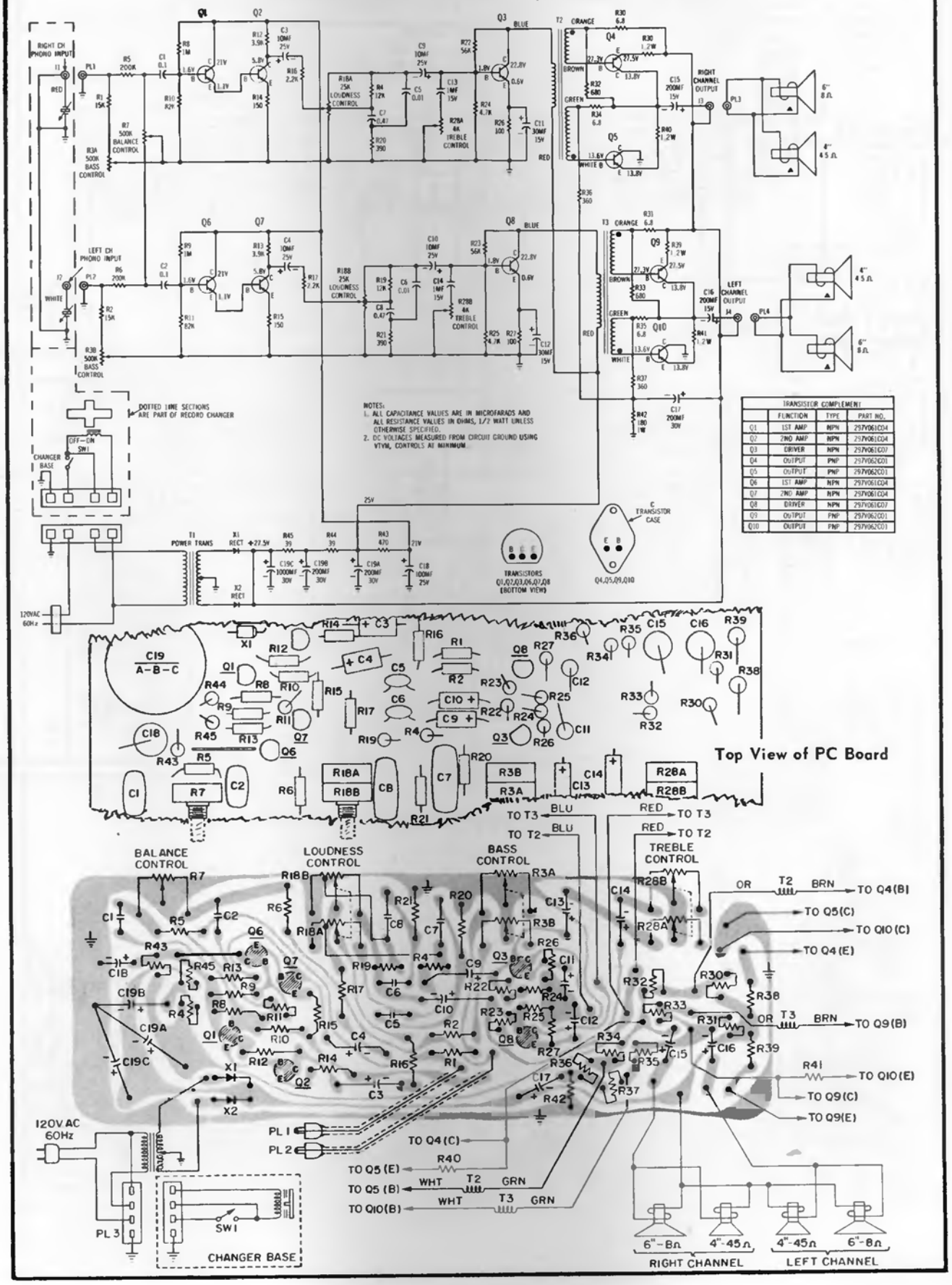


| TRANSISTOR COMPLEMENT | | | |
|---|---|---|---|
| | FUNCTION | TYPE | PART NO. |
| Q1 | 1ST AMP | NPN | 297V061C04 |
| Q2 | 2ND AMP | NPN | 297V061C04 |
| Q3 | DRIVER | NPN | 297V061C07 |
| Q4 | OUTPUT | PNP | 297V062C01 |
| Q5 | OUTPUT | PNP | 297V062C01 |
| Q6 | 1ST AMP | NPN | 297V061C04 |
| Q7 | 2ND AMP | NPN | 297V061C04 |
| Q8 | DRIVER | NPN | 297V061C07 |
| Q9 | OUTPUT | PNP | 297V062C01 |
| Q10 | OUTPUT | PNP | 297V062C01 |

WESTINGHOUSE Models CR705A, H-975XLNA, RLF-1090A, RTF-3040A;
Chassis V-2598-1, 2, 3

(Continued on next page.)

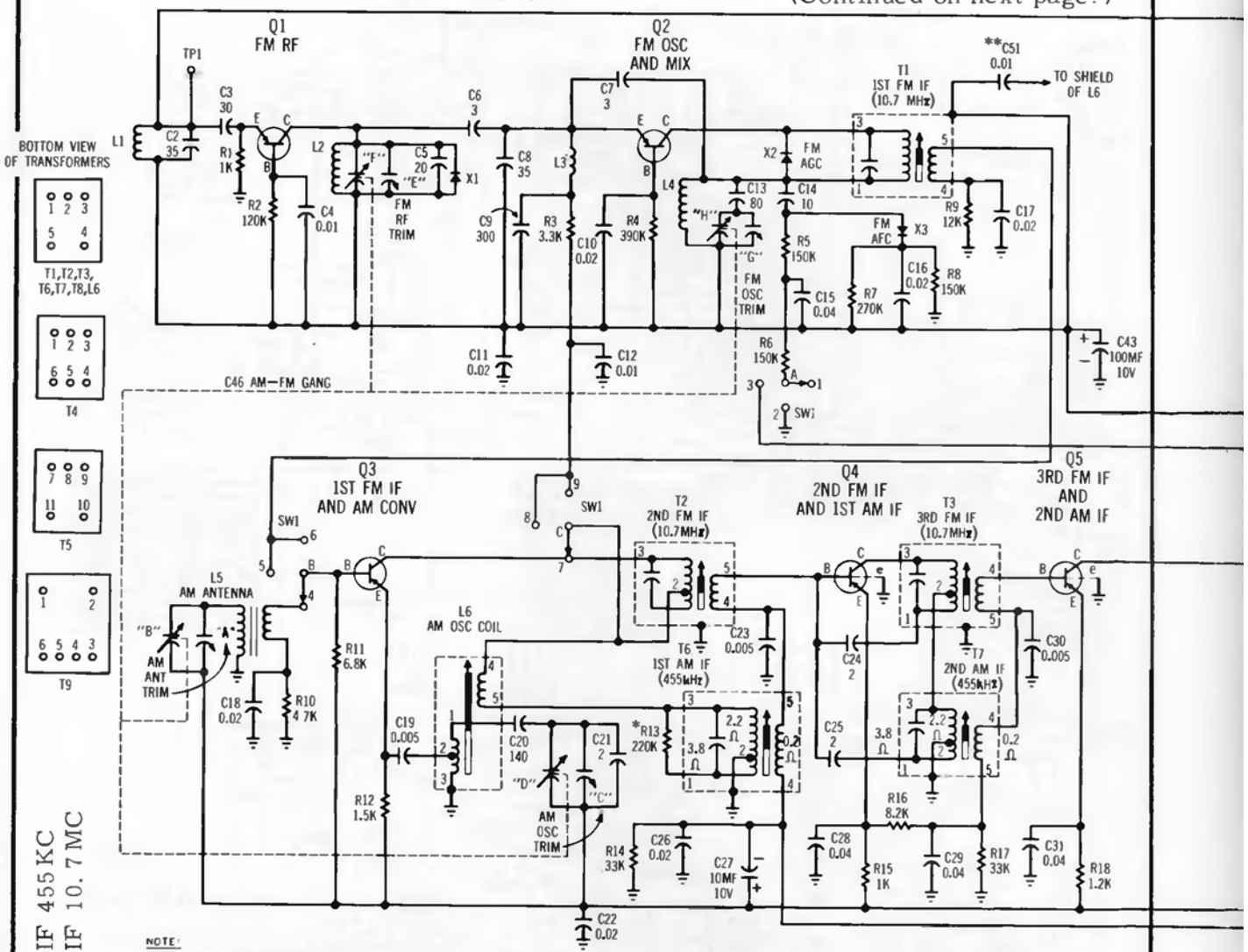


NOTE:
1. SW1 SHOWN IN AM POSITION.
2. C51 LOCATED ON TOP OF BOARD (V2598-2)
3. BROKEN LINES LOCATED ON TOP OF BOARD.

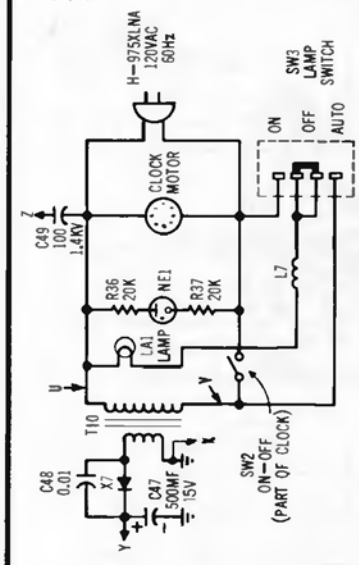


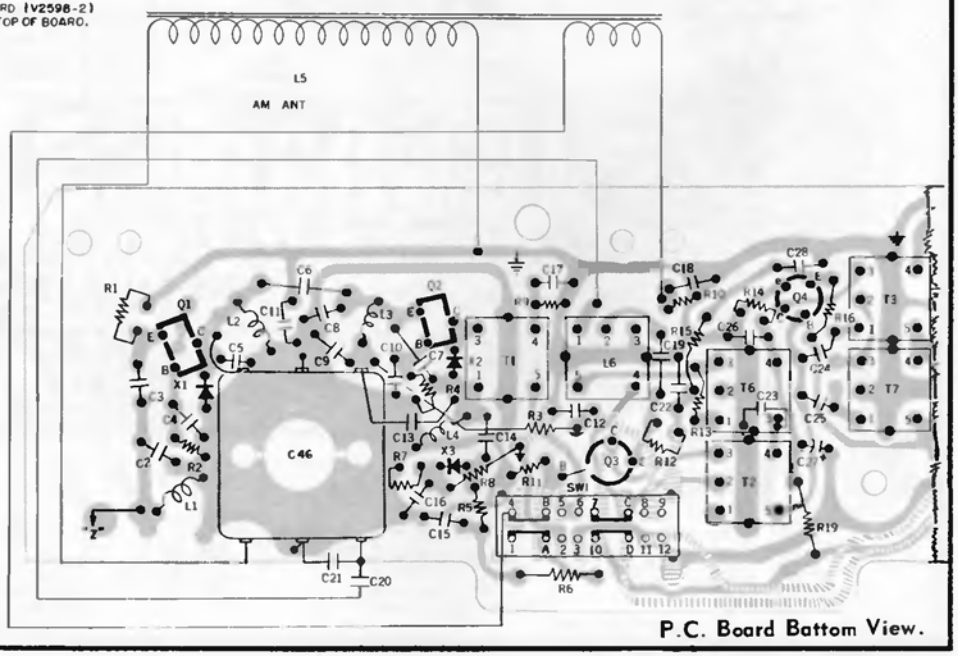


P.C. Board Bottom View.

WESTINGHOUSE Models CR705A, H-975XLNA, RLF-1090A, RTF-3040A;
Chassis V-2598-1, 2, 3 (Continued from preceding page.)

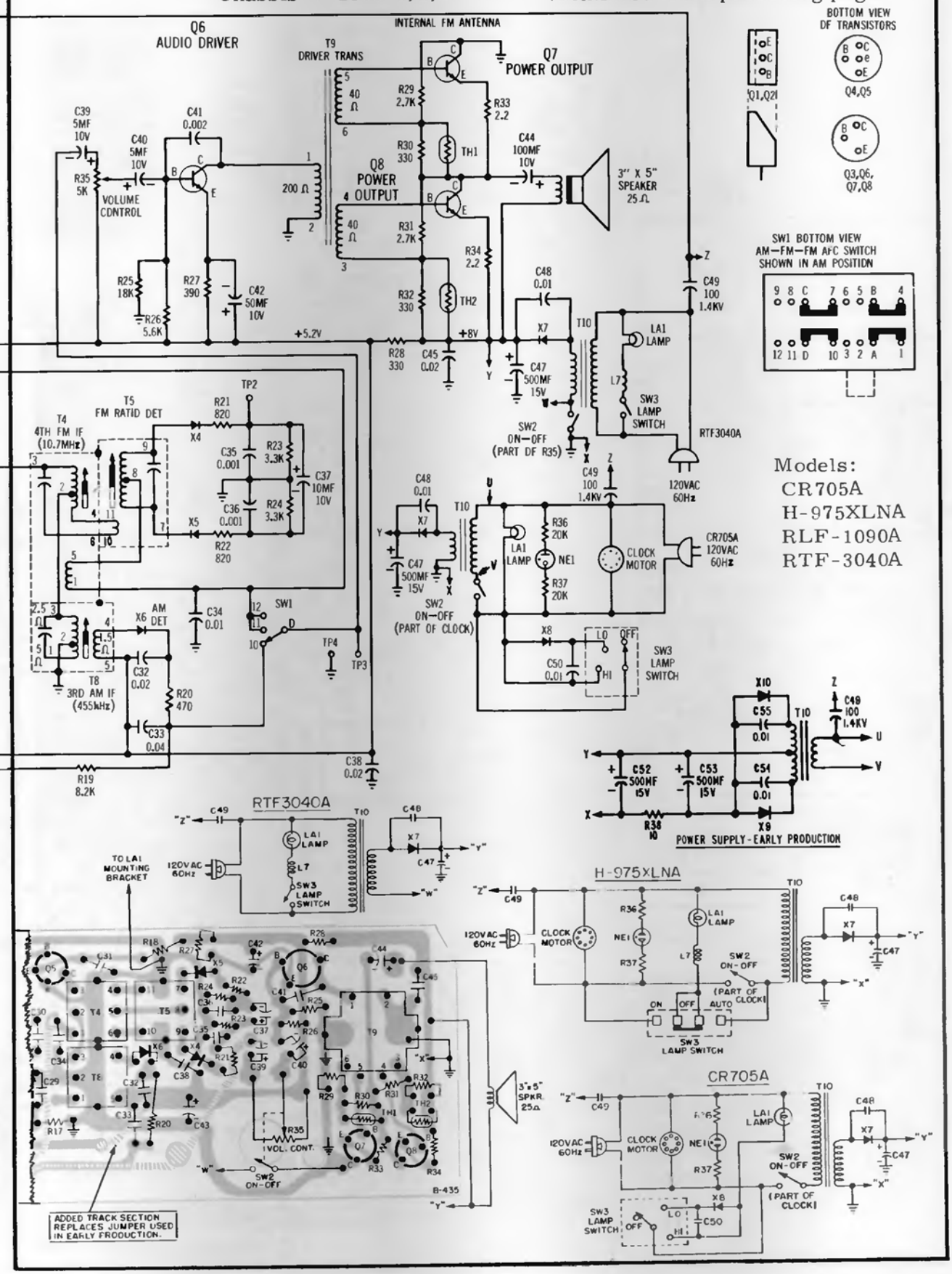

# WESTINGHOUSE Model PAS7080A; Chassis V-4003C01

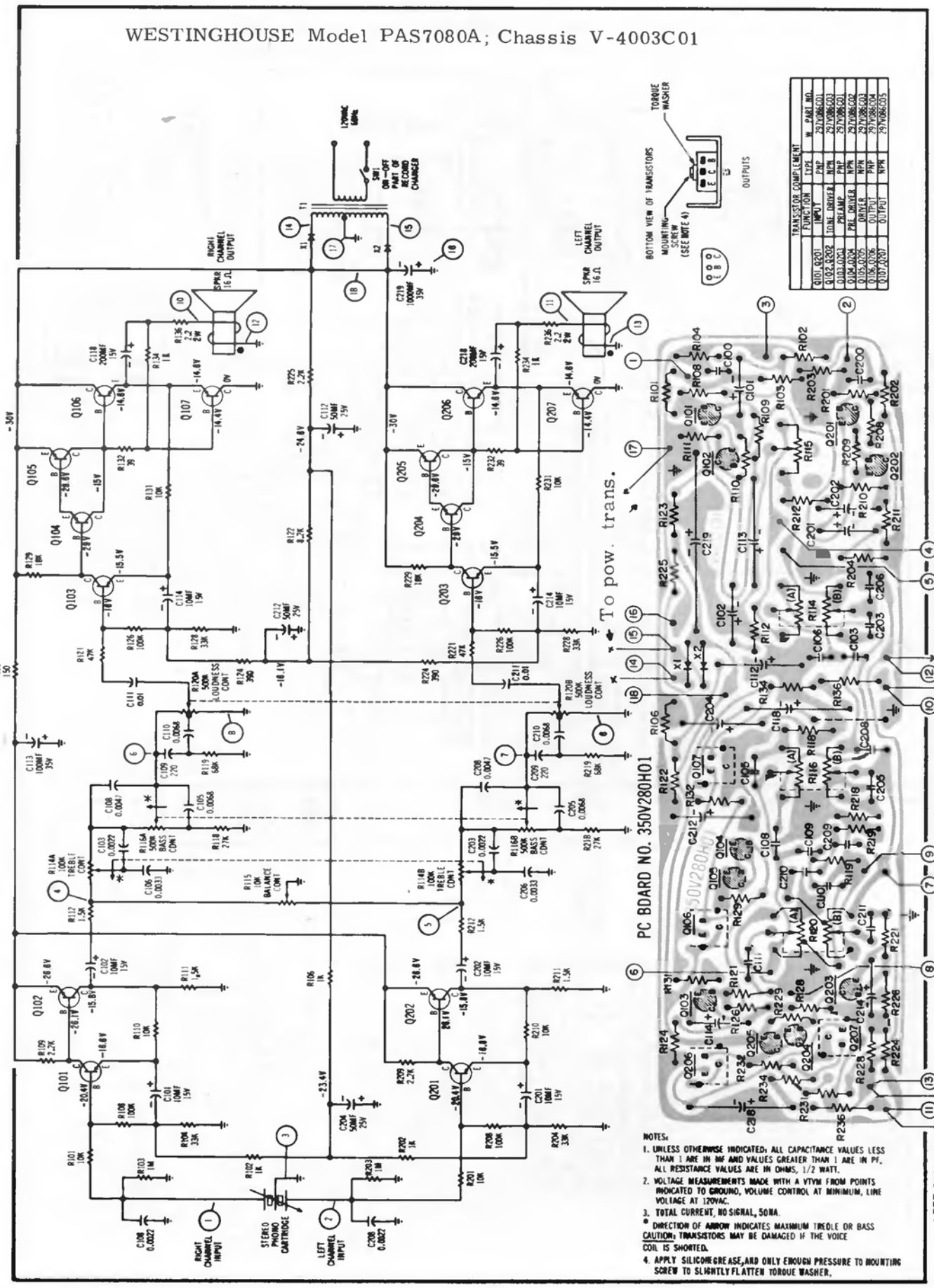

# WESTINGHOUSE Model PAS7020A; Chassis V-4002C01

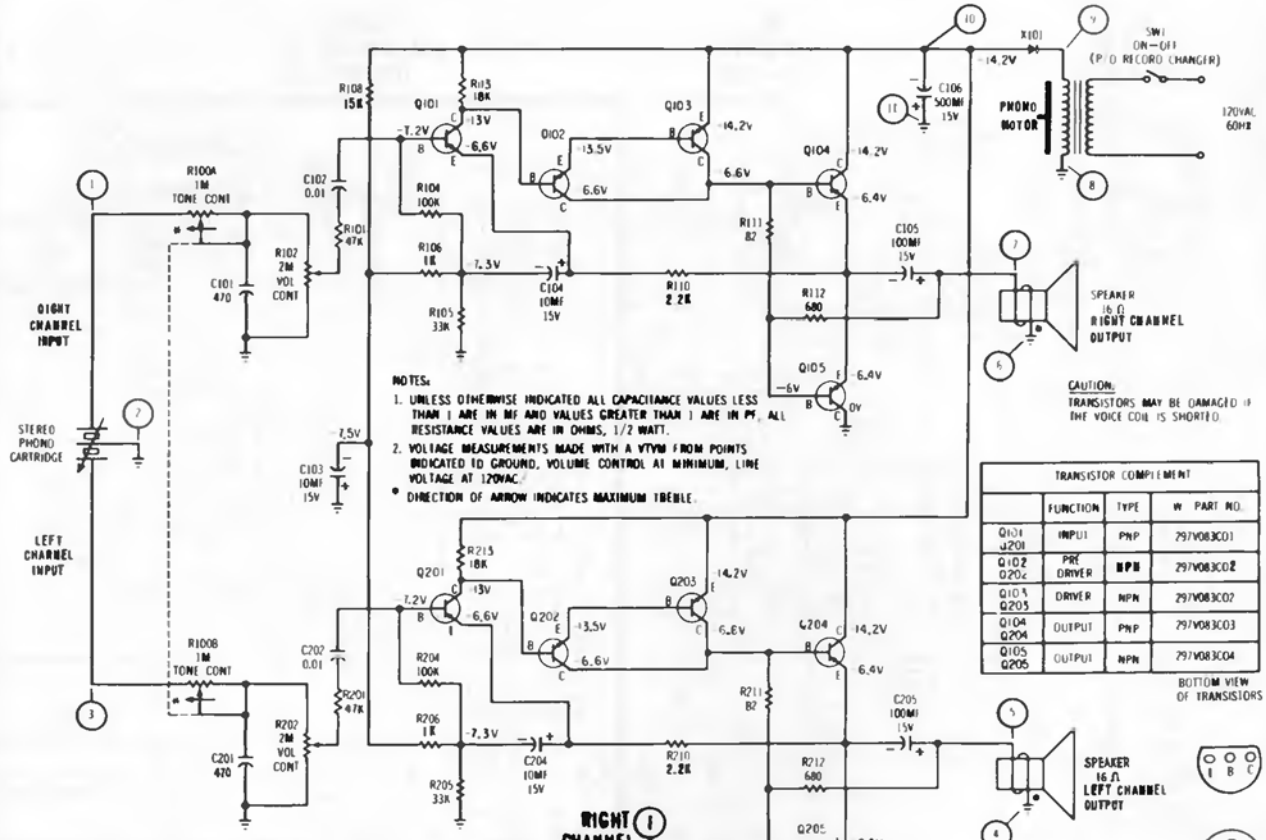


| TRANSISTOR COMPLEMENT | | | |
|---|---|---|---|
| | FUNCTION | TYPE | W PART NO. |
| Q101 Q201 | INPUT | PNP | 297V083C01 |
| Q102 Q202 | PRE DRIVER | NPN | 297V083C02 |
| Q103 Q203 | DRIVER | NPN | 297V083C02 |
| Q104 Q204 | OUTPUT | PNP | 297V083C03 |
| Q105 Q205 | OUTPUT | NPN | 297V083C04 |

BOTTOM VIEW OF TRANSISTORS

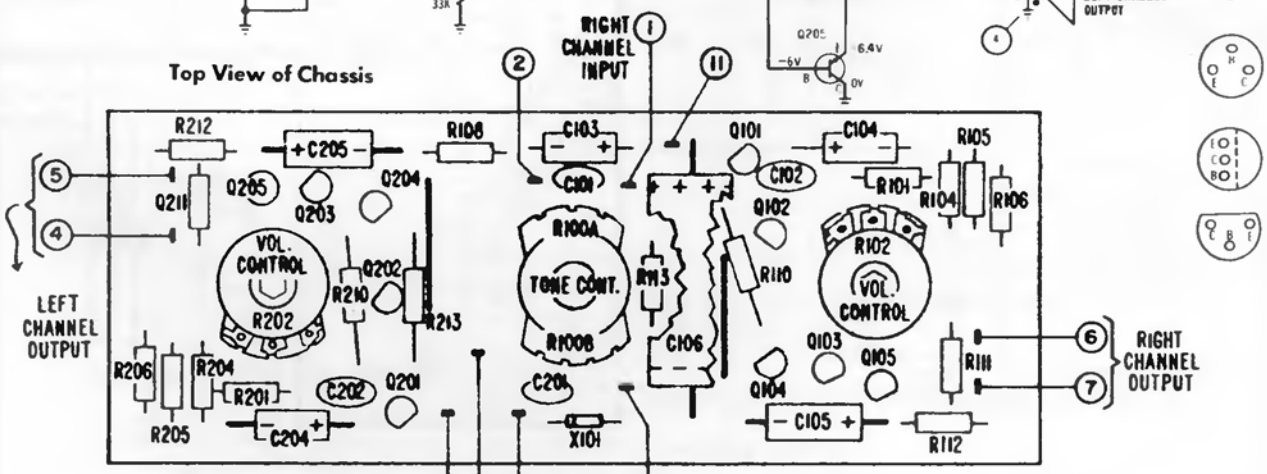


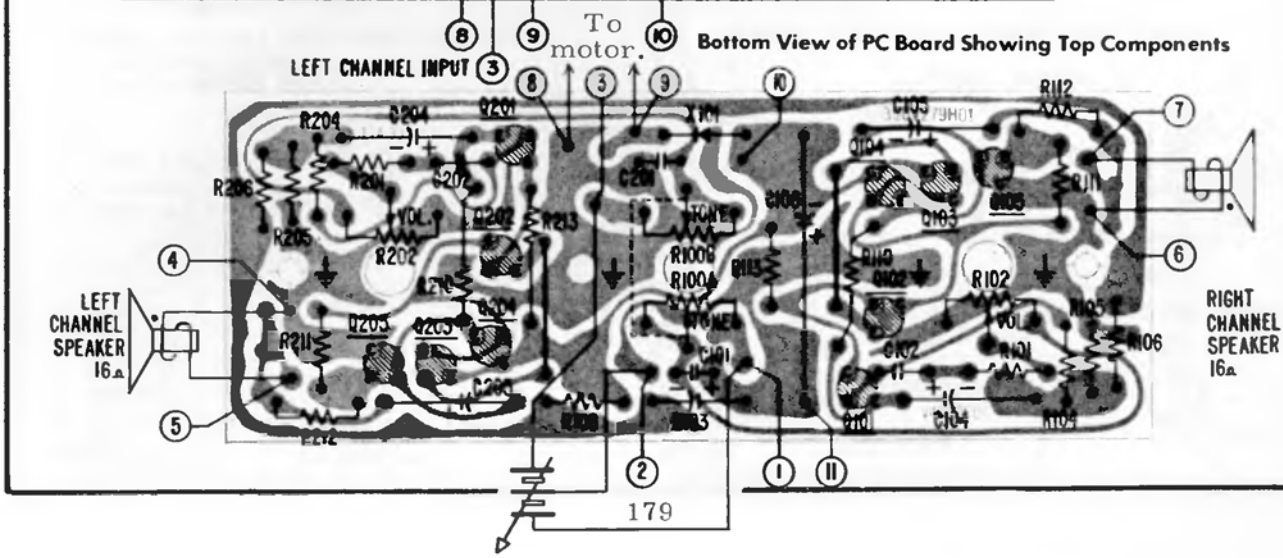

ZENITH Chassis 9ZT15, Models Z430, Z434, T2546 (Continued across page)

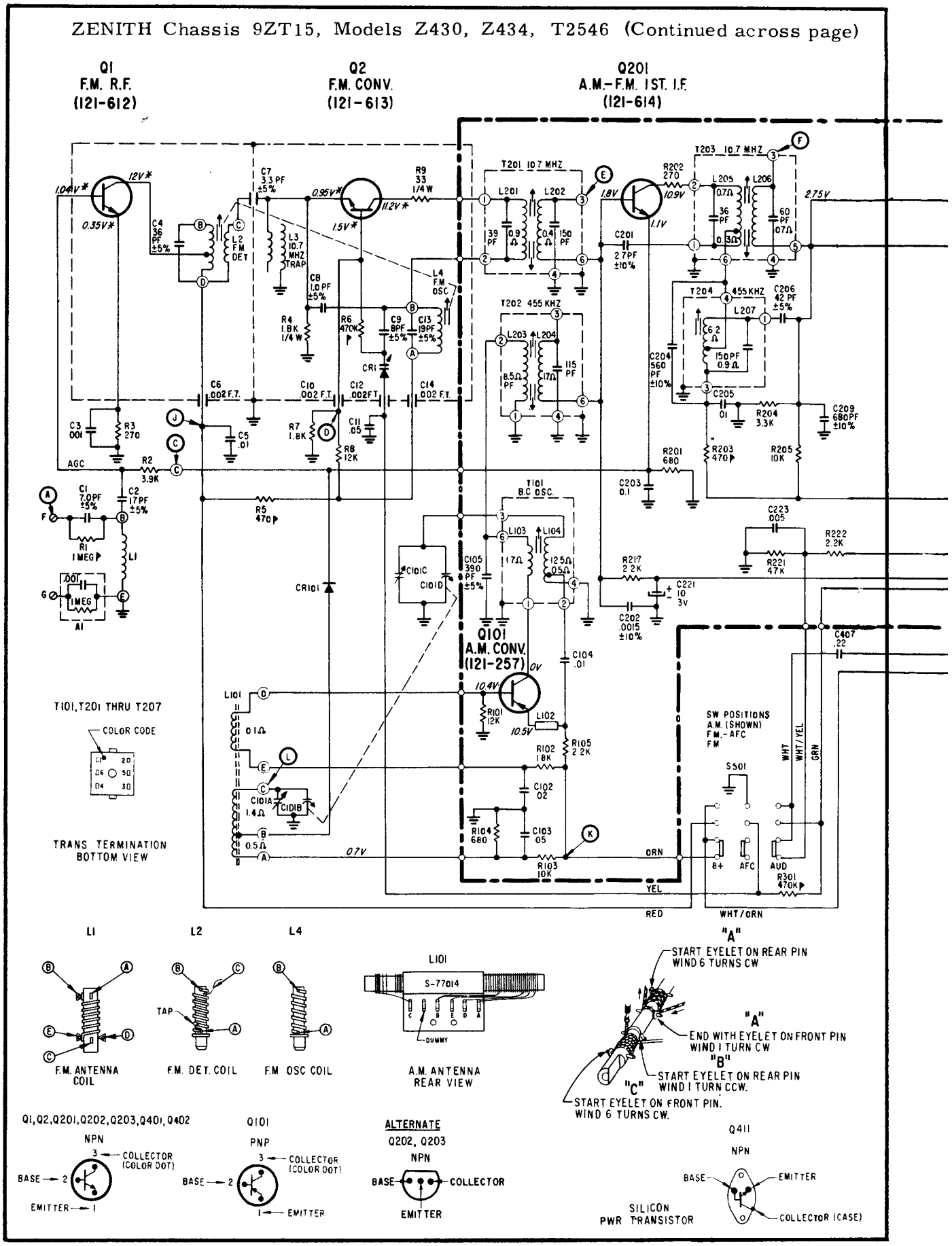

# ZENITH Chassis 9ZT15, Models Z430, Z434, T2546

(Continued from page 180)

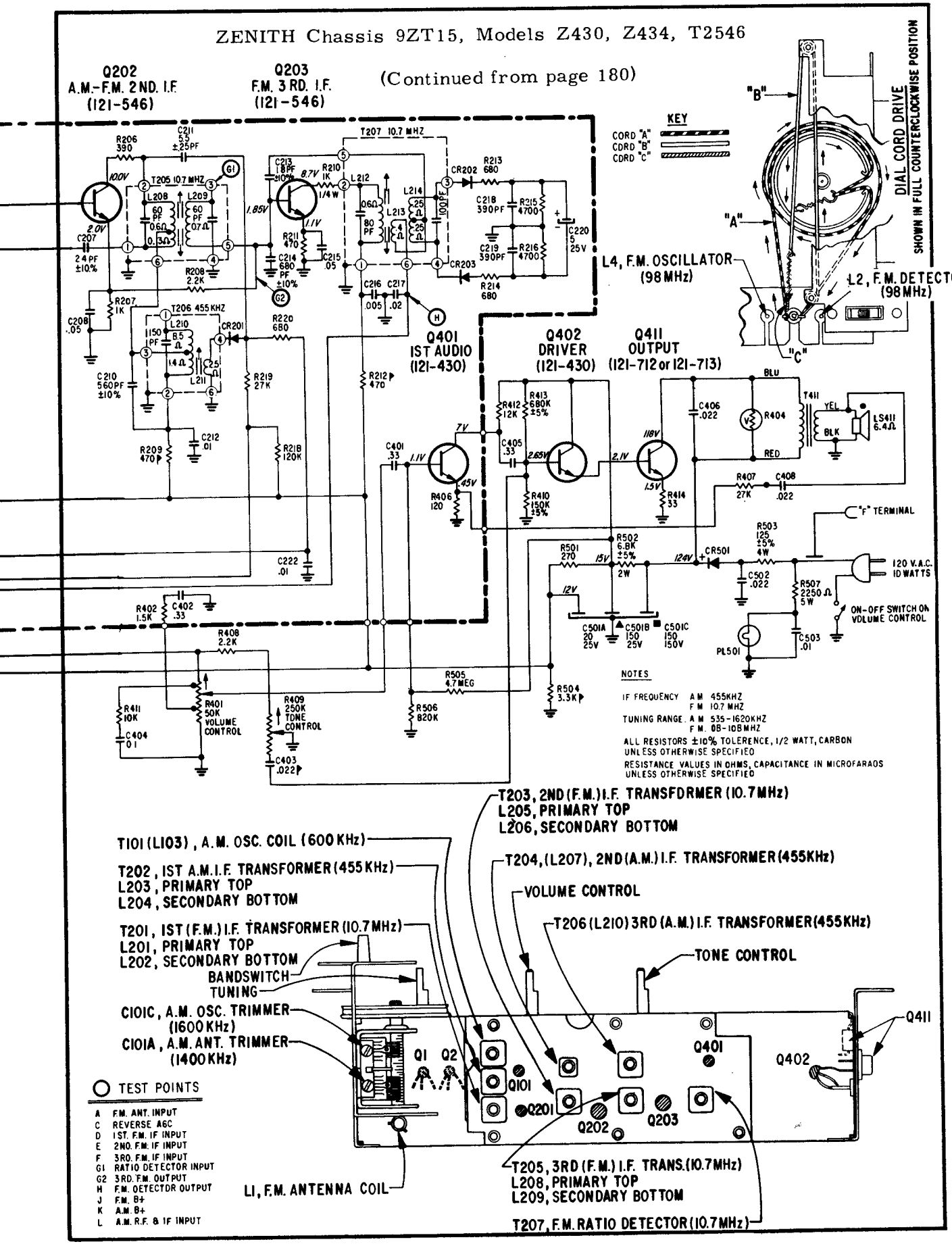

# ZENITH RADIO CORPORATION

Chassis 4NT23Z2, 4NT23Z9,
4NT24Z2, 4NT24Z9,
4NT25Z2, 4NT25Z9,

Models N855C, W,
N870F, J, W, N875A, M

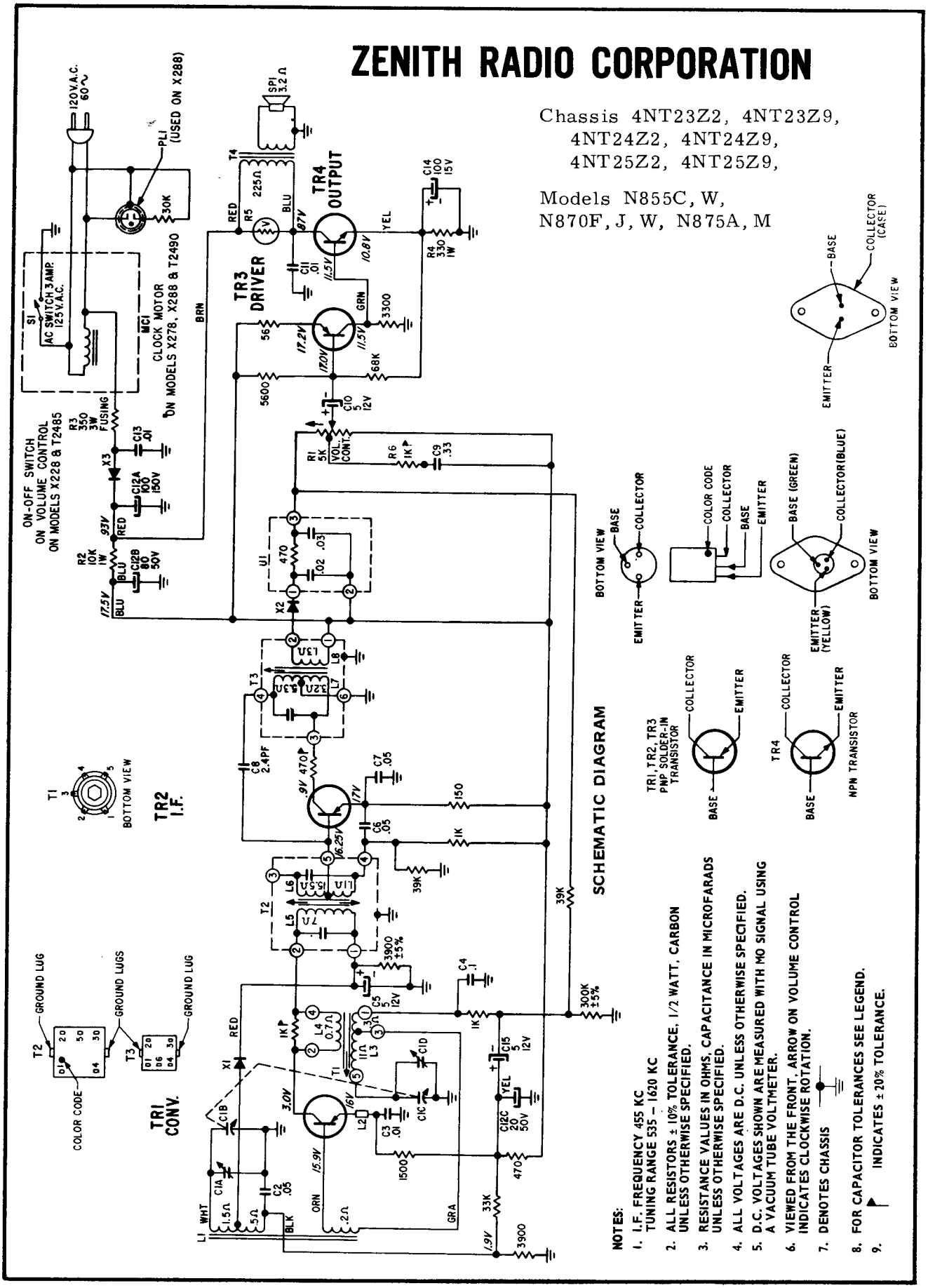

# ZENITH RADIO CORPORATION

## MODEL T325 W & M CHASSIS 7M05

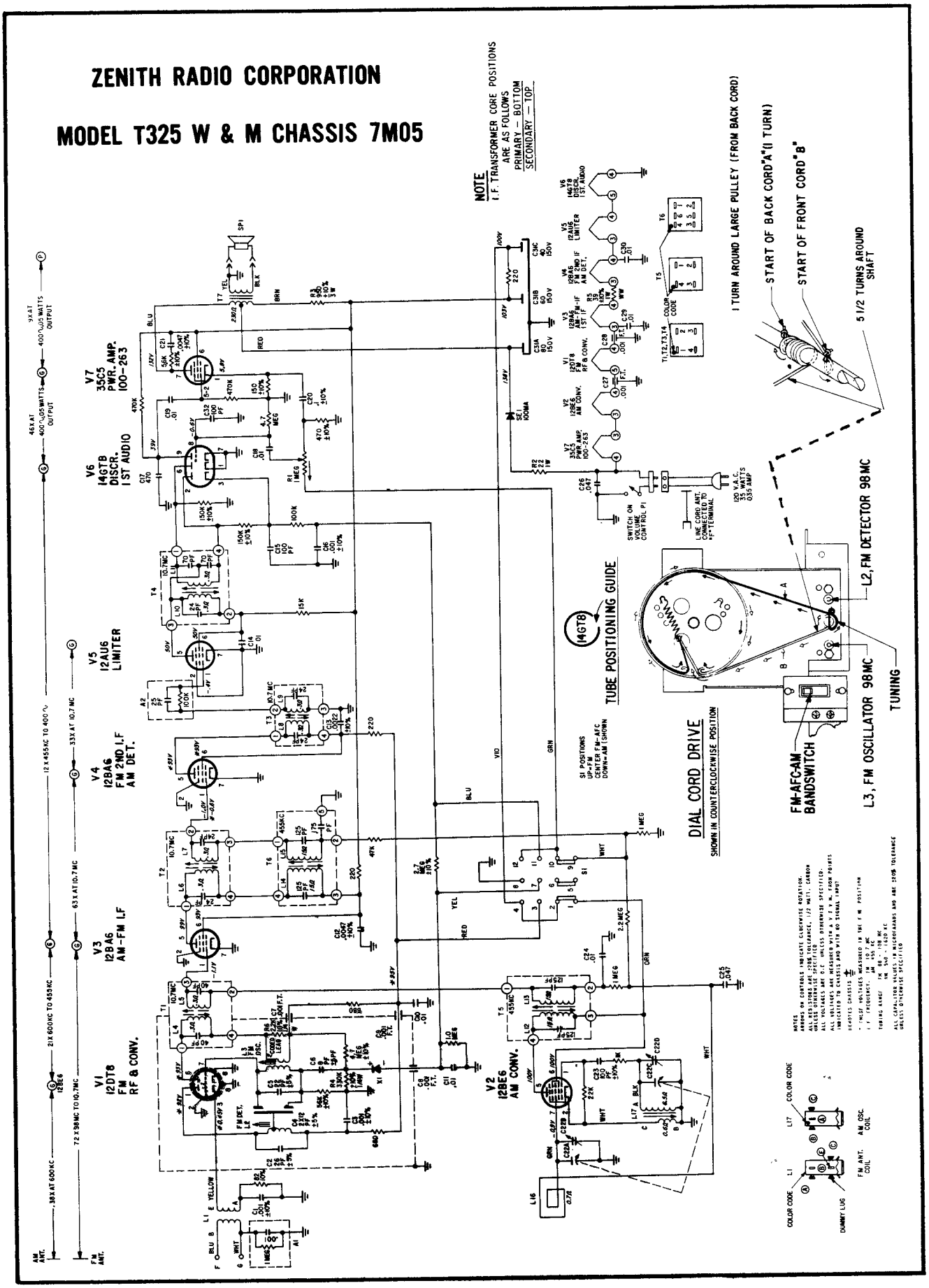

# ZENITH RADIO CORPORATION

Chassis 4ZT28, 4ZT29,

Models Z212, Z214, Z260, Z265, T2504, T2511

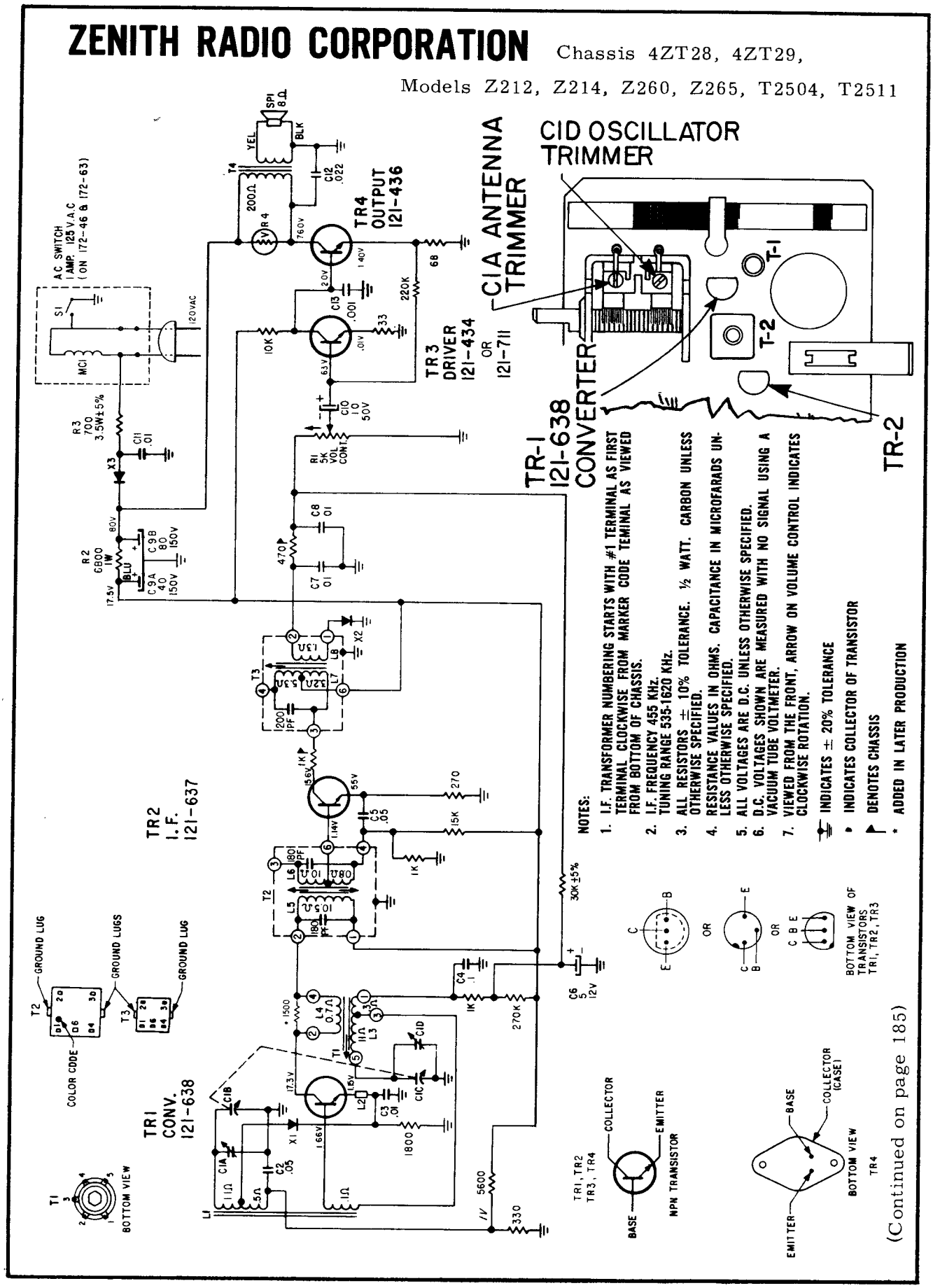


(Continued on page 185)

# ZENITH RADIO CORPORATION

Chassis 4ZT28, 4ZT29, Continued
(See page 184 for diagram)

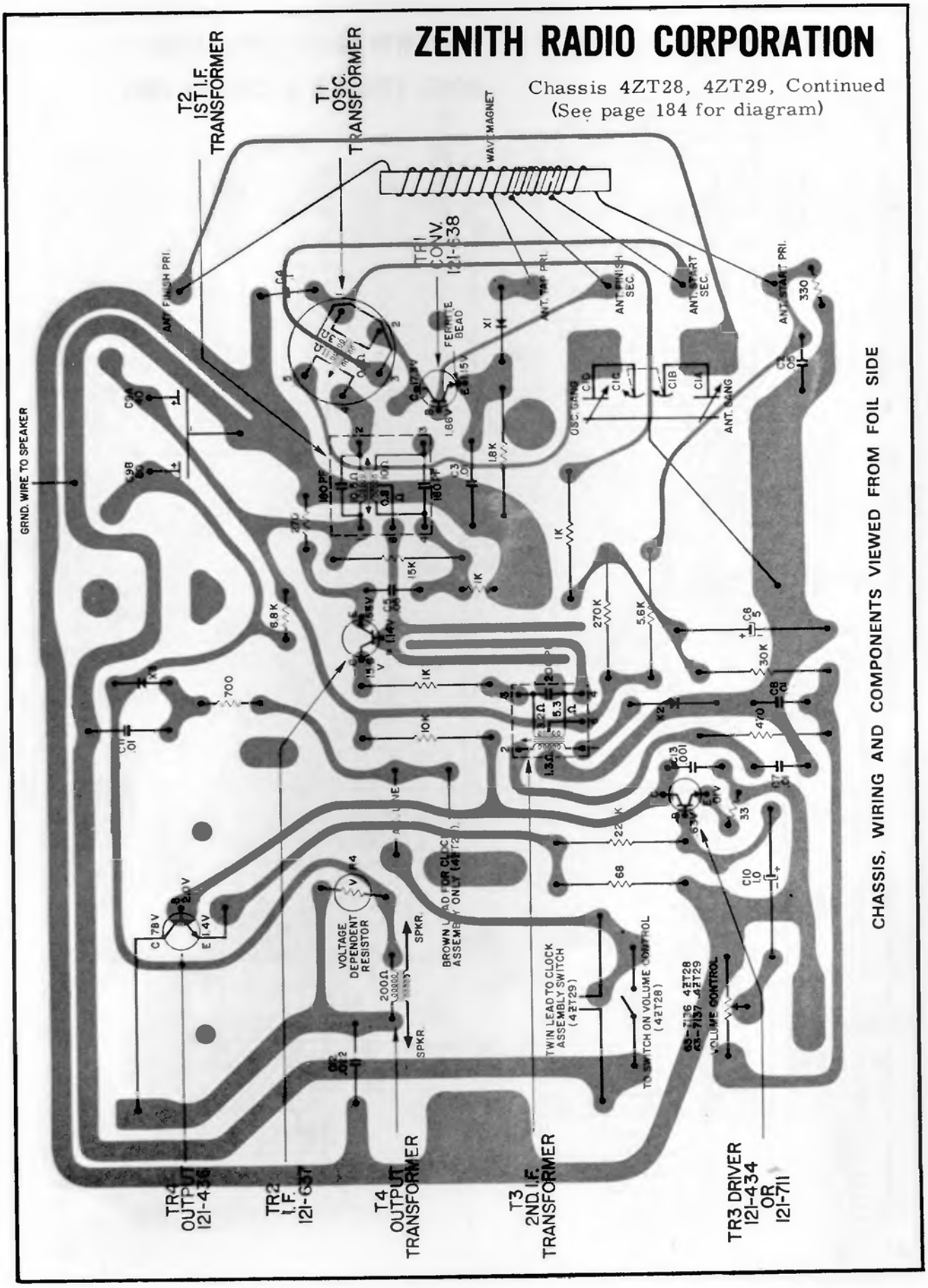


CHASSIS, WIRING AND COMPONENTS VIEWED FROM FOIL SIDE

# ZENITH RADIO CORPORATION

## MODEL T350 R & W CHASSIS 7M07

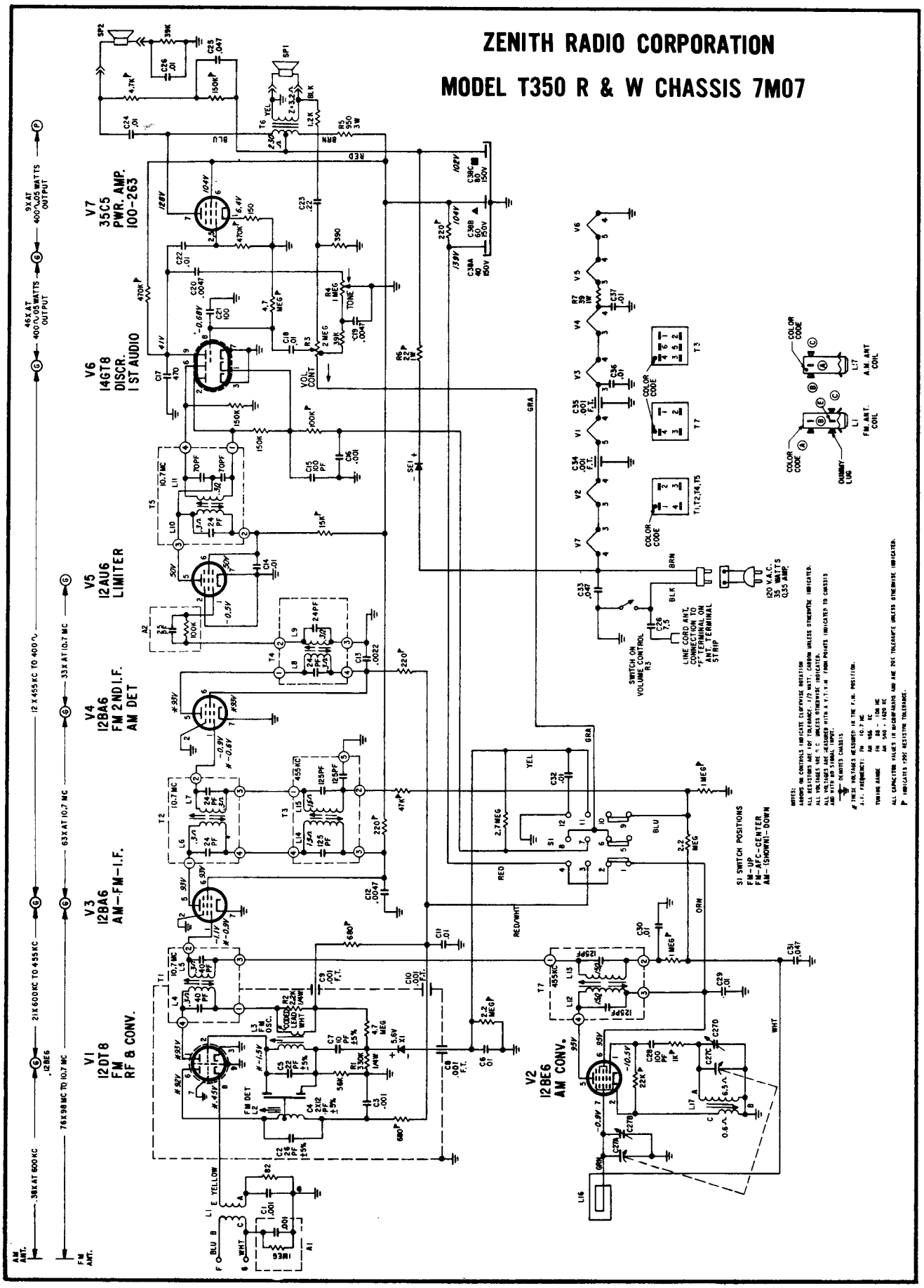

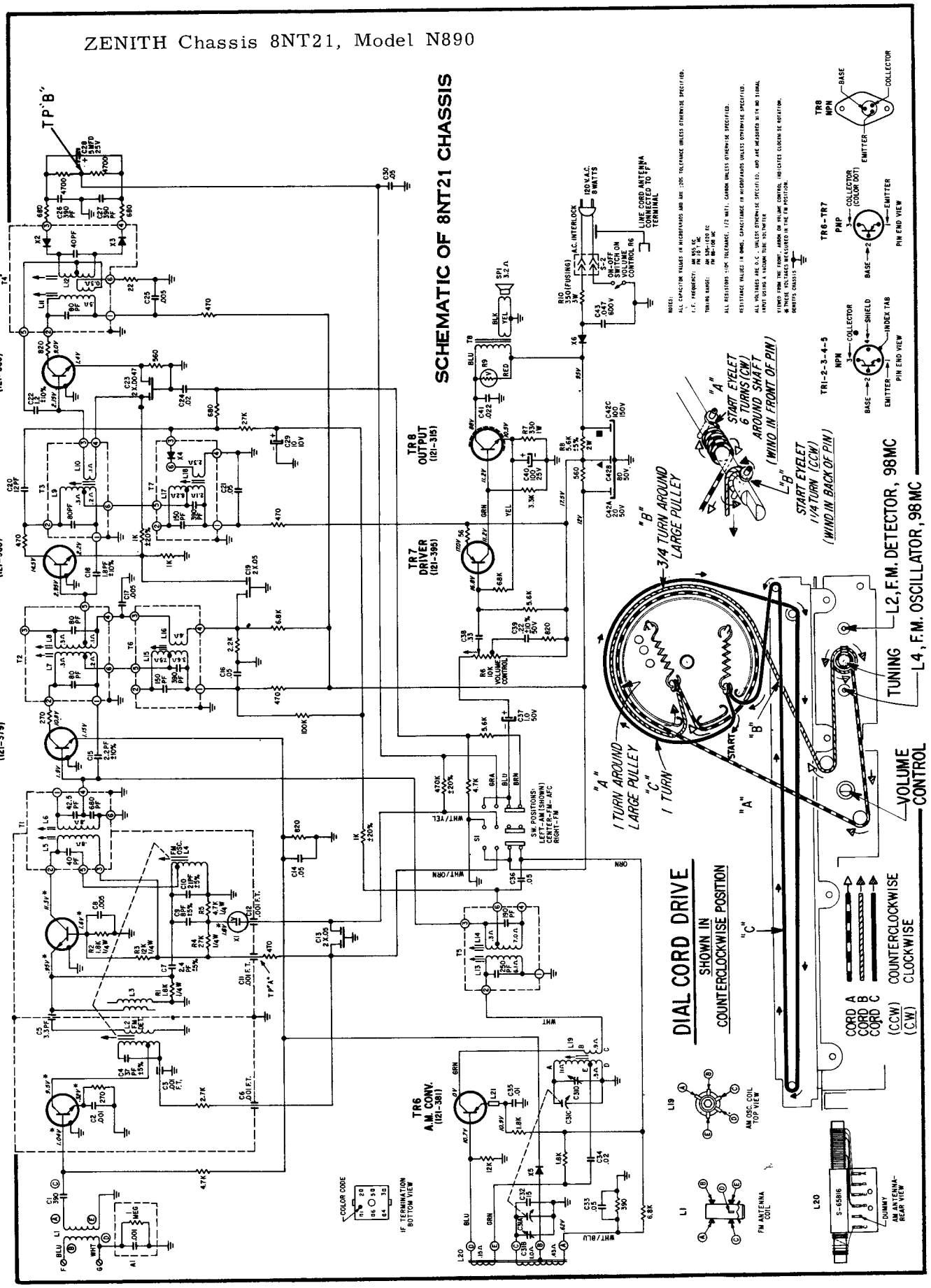
SCHEMATIC OF 8NT21 CHASSIS
TR1 F.M. R.F. (121-377)
TR2 F.M. CONV. (121-378)
TR3 A.M.-F.M. 1ST I.F. (121-379)
TR4 A.M.-F.M. 2ND I.F. (121-380)
TR5 F.M. 3RD I.F. (121-380)
TR6 A.M. CONV. (121-381)
TR7 DRIVER (121-395)
TR8 OUTPUT (121-315)
TR1-2-3-4-5 NPN
TR6-TR7 PNP
TR8 NPN
DIAL CORD DRIVE
SHOWN IN COUNTERCLOCKWISE POSITION
"A" START EYELET 6 TURNS (CW) AROUND SHAFT (WIND IN FRONT OF PIN)
"B" START EYELET 1/4 TURN (CCW) (WIND IN BACK OF PIN)
"B" 3/4 TURN AROUND LARGE PULLEY
"A" 1 TURN AROUND LARGE PULLEY
"C" 1 TURN
TUNING
L2, F.M. DETECTOR, 98MC
L4, F.M. OSCILLATOR, 98MC
VOLUME CONTROL
CORD A
CORD B
CORD C
(CCW) COUNTERCLOCKWISE
(CW) CLOCKWISE
COLOR CODE
IF TERMINATION BOTTOM VIEW
AM OSC. COIL TOP VIEW
FM ANTENNA COIL
DUMMY AM ANTENNA REAR VIEW
SW. POSITIONS: LEFT-AM (SHOWN) CENTER-AFC RIGHT-FM
A.C. INTERLOCK
120 V.A.C. 8 WATTS
LINE CORD ANTENNA CONNECTED TO F TERMINAL
S-2 SW-OFF SWITCH ON VOLUME CONTROL R6
NOTES:
ALL CAPACITOR VALUES IN MICROFARADS AND ARE ±20% TOLERANCE UNLESS OTHERWISE SPECIFIED.
I.F. FREQUENCY: AM 455 KC FM 10.7 MC
TUNING RANGE: AM 540-1700 KC FM 88-108 MC
ALL RESISTORS ±10% TOLERANCE, 1/2 WATT, CARBON UNLESS OTHERWISE SPECIFIED.
RESISTANCE VALUES IN OHMS, CAPACITANCE IN MICROFARADS UNLESS OTHERWISE SPECIFIED.
ALL VOLTAGES ARE D.C. UNLESS OTHERWISE SPECIFIED, AND ARE MEASURED WITH NO SIGNAL INPUT USING A VACUUM TUBE VOLTMETER.
VIEWED FROM THE FRONT, ARROW ON VOLUME CONTROL INDICATES CLOCKWISE ROTATION.
◎ THESE VOLTAGES MEASURED IN THE FM POSITION.
DENOTES CHASSIS

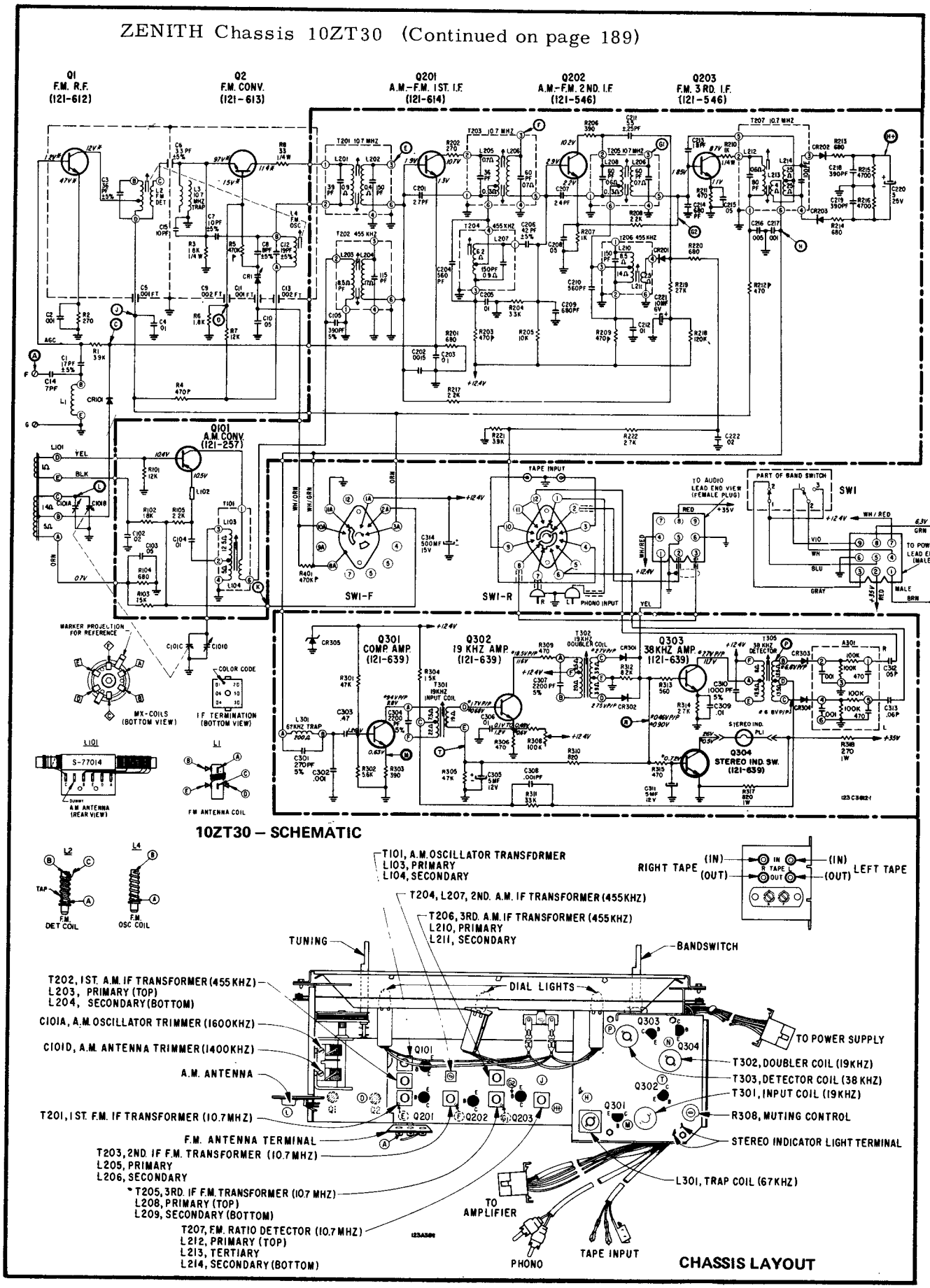


## 10ZT30 – SCHEMATIC




## CHASSIS LAYOUT

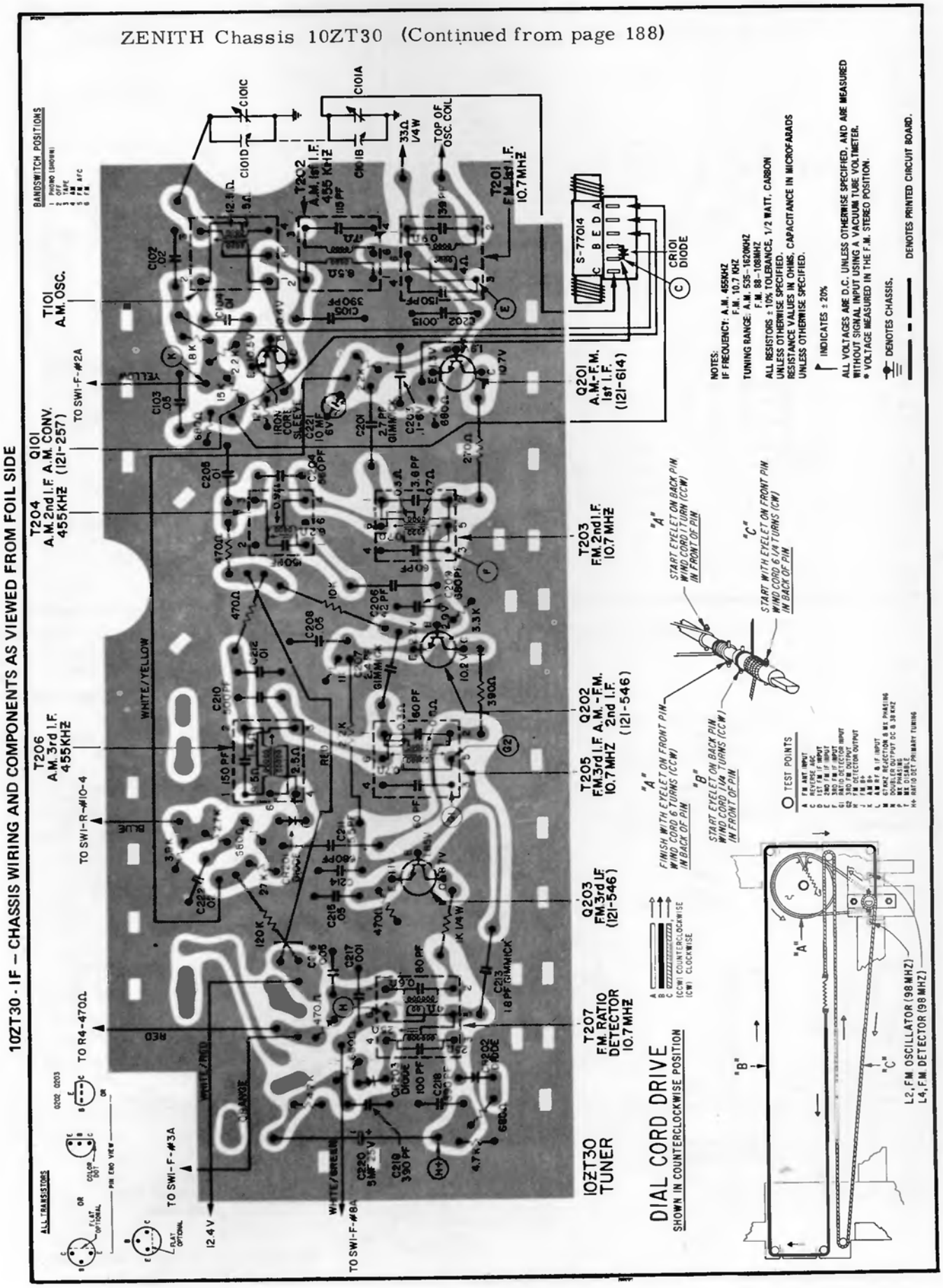
10ZT30 - IF – CHASSIS WIRING AND COMPONENTS AS VIEWED FROM FOIL SIDE
BANDSWITCH POSITIONS
T101 A.M. OSC.
Q101 A.M. CONV. (121-257)
T204 A.M. 2nd I.F. 455KHZ
T206 A.M. 3rd I.F. 455KHZ
T202 A.M. 1st I.F. 455 KHZ
T201 F.M. 1st I.F. 10.7 MHZ
T203 F.M. 2nd I.F. 10.7 MHZ
T205 F.M. 3rd I.F. 10.7 MHZ
T207 F.M. RATIO DETECTOR 10.7 MHZ
Q201 A.M.-F.M. 1st I.F. (121-614)
Q202 A.M.-F.M. 2nd I.F. (121-546)
Q203 F.M. 3rd I.F. (121-546)
CR101 DIODE
S-77014
TOP OF OSC. COIL
TO SW1-F-#2A
TO SW1-R-#10-4
TO R4-470Ω
TO SW1-F-#3A
TO SW1-F-#8A
12.4 V
10ZT30 TUNER
DIAL CORD DRIVE
SHOWN IN COUNTERCLOCKWISE POSITION
(CCW) COUNTERCLOCKWISE
(CW) CLOCKWISE
"A" FINISH WITH EYELET ON FRONT PIN WIND CORD 6 TURNS (CCW) IN BACK OF PIN
"B" START EYELET ON BACK PIN WIND CORD 1 1/4 TURNS (CCW) IN FRONT OF PIN
"A" START EYELET ON BACK PIN WIND CORD 1 TURN (CCW) IN FRONT OF PIN
"C" START WITH EYELET ON FRONT PIN WIND CORD 6 1/4 TURNS (CW) IN BACK OF PIN
TEST POINTS
L2, F.M. OSCILLATOR (98 MHZ)
L4, F.M. DETECTOR (98 MHZ)
NOTES:
IF FREQUENCY: A.M. 455KHZ
F.M. 10.7 KHZ
TUNING RANGE: A.M. 535-1620KHZ
F.M. 88-108MHZ
ALL RESISTORS ± 10% TOLERANCE, 1/2 WATT, CARBON UNLESS OTHERWISE SPECIFIED.
RESISTANCE VALUES IN OHMS, CAPACITANCE IN MICROFARADS UNLESS OTHERWISE SPECIFIED.
INDICATES ± 20%
ALL VOLTAGES ARE D.C. UNLESS OTHERWISE SPECIFIED, AND ARE MEASURED WITHOUT SIGNAL INPUT USING A VACUUM TUBE VOLTMETER.
* VOLTAGE MEASURED IN THE F.M. STEREO POSITION.
DENOTES CHASSIS.
DENOTES PRINTED CIRCUIT BOARD.
ALL TRANSISTORS

## ZENITH Chassis 8NT46Z9, Models "Royal 270"

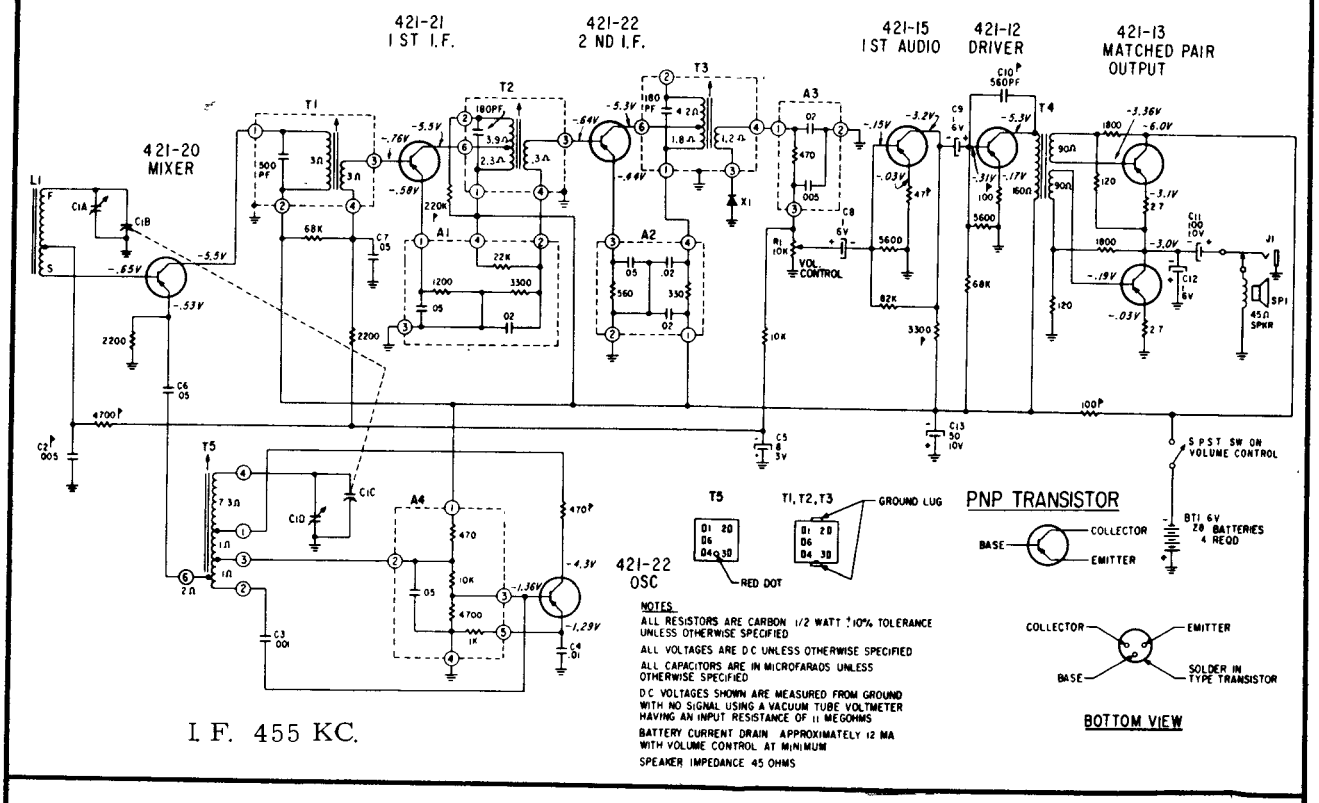


NOTES

ALL RESISTORS ARE CARBON 1/2 WATT ±10% TOLERANCE UNLESS OTHERWISE SPECIFIED

ALL VOLTAGES ARE D C UNLESS OTHERWISE SPECIFIED

ALL CAPACITORS ARE IN MICROFARADS UNLESS OTHERWISE SPECIFIED

D C VOLTAGES SHOWN ARE MEASURED FROM GROUND WITH NO SIGNAL USING A VACUUM TUBE VOLTMETER HAVING AN INPUT RESISTANCE OF 11 MEGOHMS

BATTERY CURRENT DRAIN APPROXIMATELY 12 MA WITH VOLUME CONTROL AT MINIMUM

SPEAKER IMPEDANCE 45 OHMS

I. F. 455 KC.

## ZENITH Models X540G-1, 540L-1, X547P-1, 547X-1

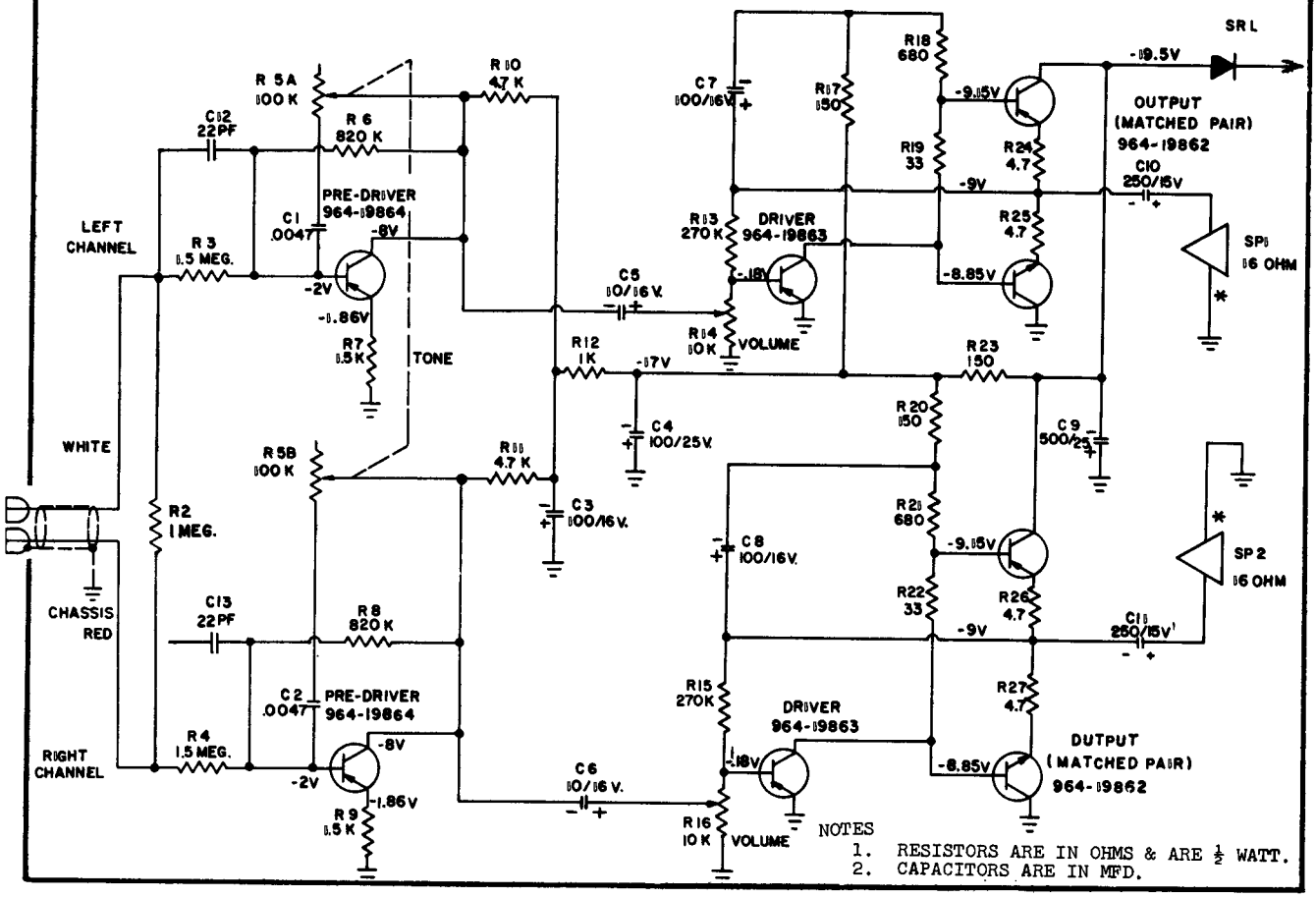


NOTES

1. RESISTORS ARE IN OHMS & ARE ½ WATT.
2. CAPACITORS ARE IN MFD.

# Index



(INDEX continued)

INDEX Continued