# *Most-Often-Needed*

# 1966

Volume R-26

# RADIO DIAGRAMS

## *and Servicing Information*

Compiled by

**M. N. BEITMAN**

**SUPREME PUBLICATIONS**

© by Supreme Publications, 1966. Material copyrighted, reproduction prohibited.

# Supreme Publications for Faster Radio-Television Repairs

## COVERS ALL POPULAR SETS

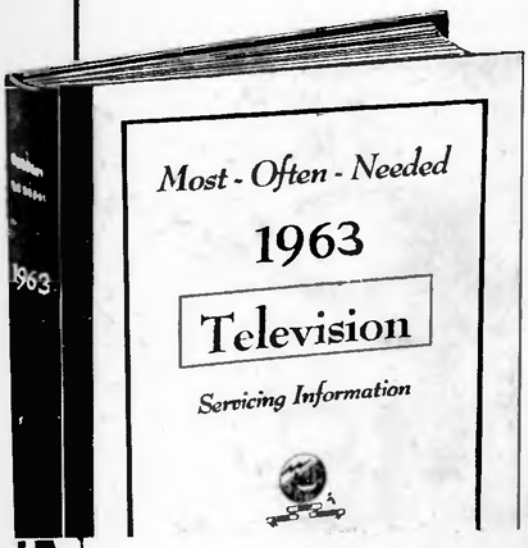


Here is your service data for faster, easier TV repairs. Lowest priced. Best by comparison. *Supreme* **TV** manuals have all needed service material on every popular TV set. Helpful, practical, factory-prepared data that will really make TV servicing easy for you. Benefit and save with these amazing values in service manuals. Only $3 per large volume. Used by 184,000 wise servicemen for faster repairs. Join them; begin to make TV repairs easily.

The repair of any TV set is simple with **Supreme Television** service manuals. Every set is covered in a practical manner to simplify trouble-shooting and repair. With this help find toughest faults in a jiffy. Most $3 TV volumes cover a whole year.

## RADIO Manuals

Your best source for all needed RADIO diagrams and service data. Covers everything from most recent **1966** radios to pre-war old-timers; home radios, stereo, combinations, transistor portables, FM. Every manual has large schematics, all needed alignment facts, printed boards, voltages, trimmers, dial stringing, and hints. Volumes are big, 8½x11 inches, about 190 pages. See coupon at right for list of SUPREME popular radio service manuals ►

**NO-RISK ORDER COUPON**

### TELEVISION SERVICE MANUALS

*Supreme* TV manuals are best for faster, easier TV repairs. Lowest priced. Factory data on practically all sets. Complete circuits, all needed alignment facts, wiring board views, waveforms, voltages, production changes, and double-page schematics. Only $3 per large annual manual. Check volumes wanted.

- ☐ *New* **1966 Television Manual, $3.** ☐ **1963 TV, $3.**
- ☐ **Additional 1965 TV, $3.** ☐ **Early 1965 TV, $3.**
- ☐ *New* **1964 Television Manual, $3.** ☐ **1963 TV, $3.**
- ☐ **Additional 1962 TV, $3.** ☐ **Early 1962 TV, $3.**
- ☐ **1961 TV Manual, $3.** ☐ **1960 TV Manual, $3.**
- ☐ **Additional 1959 TV, $3.** ☐ **Early 1959 TV, $3.**
- ☐ **1958 TV Manual, $3.** ☐ **Additional 1957 TV, $3.**
- ☐ **Early 1957 Television, $3.** ☐ **1956 TV Manual, $3.**
- ☐ **Additional 1955 TV, $3.** ☐ **Early 1955 TV, $3.**
- ☐ **1954 TV, $3.** ☐ **Master Index to all Manuals, 25¢**

### RADIO DIAGRAM MANUALS

Here are low-priced radio manuals that simplify repairing. Cover everything from most recent 1966 radios to pre-war old-timers; home radios, stereo, combinations, transistor portables, FM, and auto sets. Large schematics, all needed alignment facts, printed boards, voltages, dial stringing, hints. Volumes are big, 8½ x 11", about 190 pages, each.

**$2.50**

☐ **1985,** ☐ **1964 Manual, only $2.50**
☐ **1963,** ☐ **1962,** ☐ **1961,** ☐ **1960,** ☐ **1959,** ☐ **1958,**
☐ **1957,** ☐ **1956,** ☐ **1955,** ☐ **1954,** ☐ **1953,** ☐ **1952,**
☐ **1951,** ☐ **1950,** ☐ **1949,** ☐ **1946,** ☐ **1947,** ☐ **1946,**
☐ **1942,** ☐ **1941,** ☐ **1940,** ☐ **1926-36, EACH, $2.50**
☐ Auto Radio 1964-65 Diagram Manual, $2.50

### SUPREME PUBLICATIONS

**1760 Balsam Road, Highland Park, ILL.**

Rush today **TV** and **Radio** manuals checked in no-risk order form of this ad. Send postpaid, I am enclosing full price. You guarantee my complete satisfaction or my money back.

Name: _____

Address: _____

**Admiral** Chassis 8K4, Models YD201GP, A, YD202GP, A

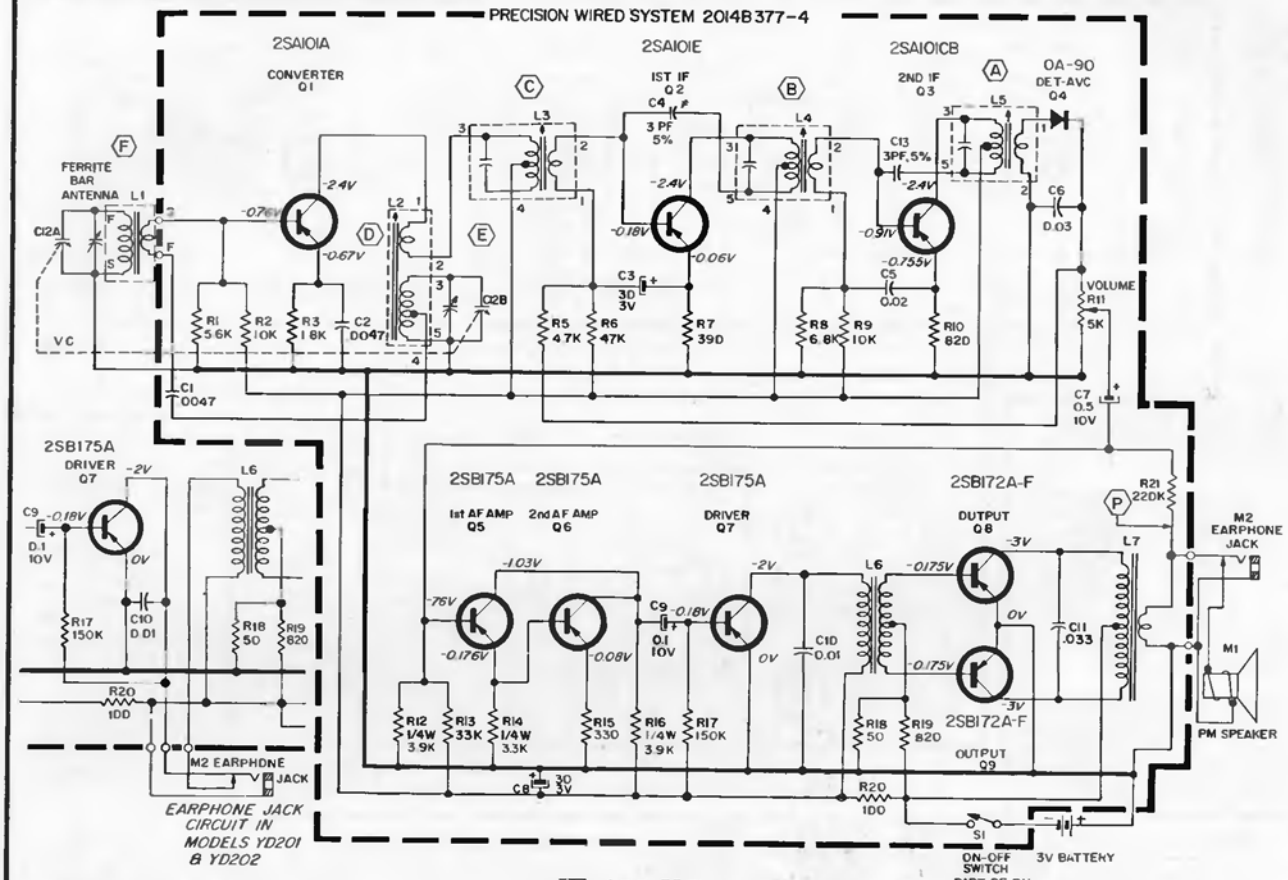


IF 455 KC.

*COMMON PRECISION WIRED GROUND
IF=455KC UNLESS OTHERWISE SPECIFIED
CAPACITOR VALUES IN MICROFARADS;
RESISTOR VALUES IN OHMS 1/2WATT, 10%
VOLTAGE AND CURRENT READINGS TAKEN
WITH FRESH BATTERY, NO SIGNAL,
VOLUME CONTROL AT MINIMUM.
CURRENT DRAIN=17MA
NOT MOUNTED ON CIRCUIT BOARD.
VOLTAGES TAKEN WITH VTVM BETWEEN
POINTS INDICATED AND COMMON
GROUND (POSITIVE).*

COMPONENT CONNECTIONS TO BACK OF BOARD AND WIRING

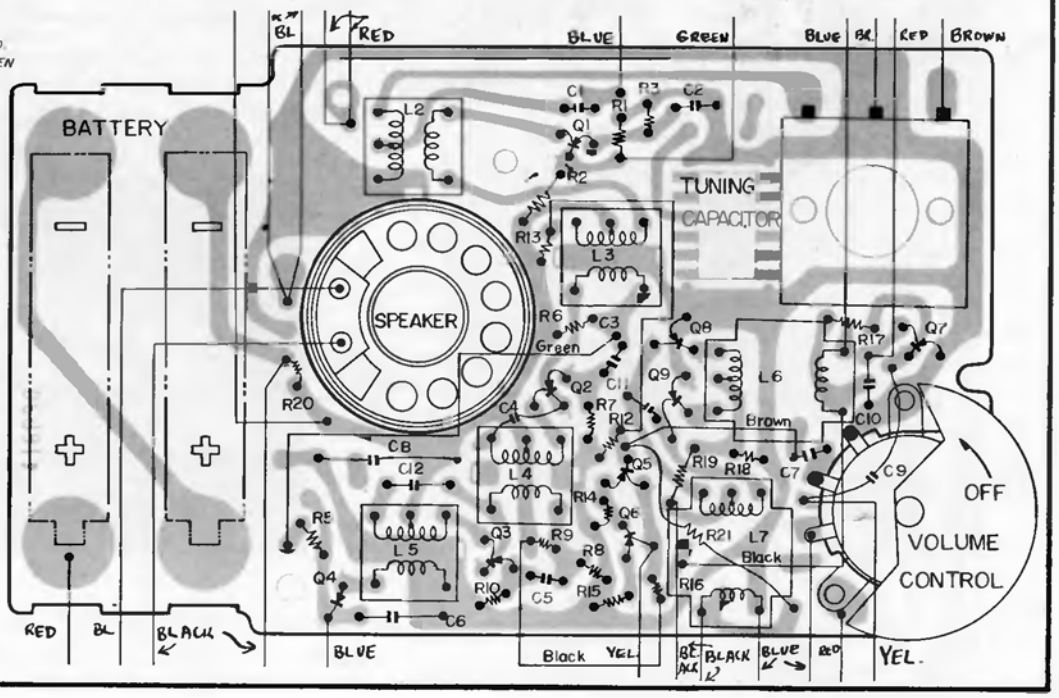

**Admiral®** Chassis 8F3, Models YD242, YD243

PRECISION WIRED SYSTEM 2014B377-3

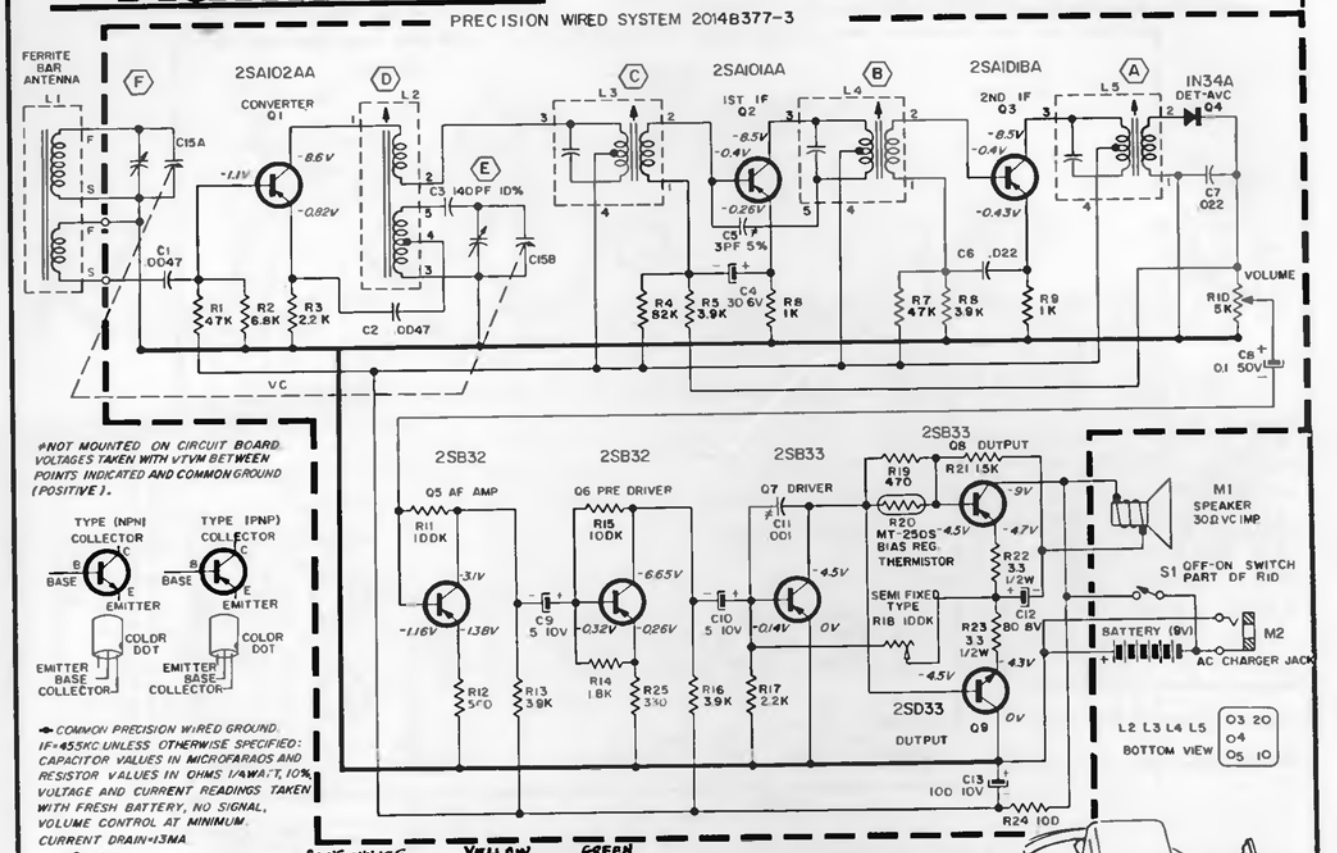


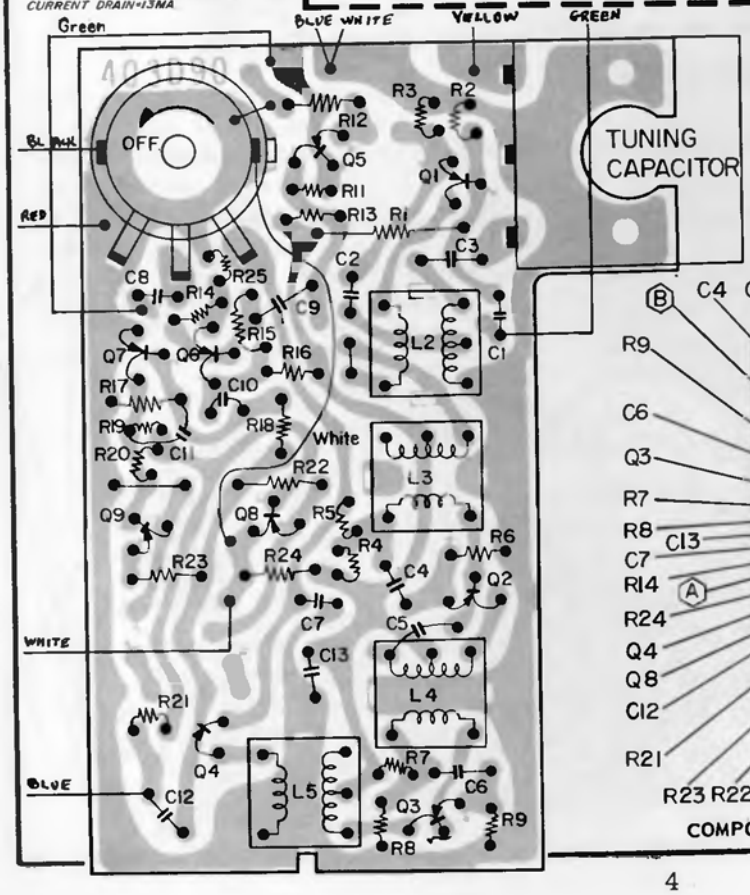


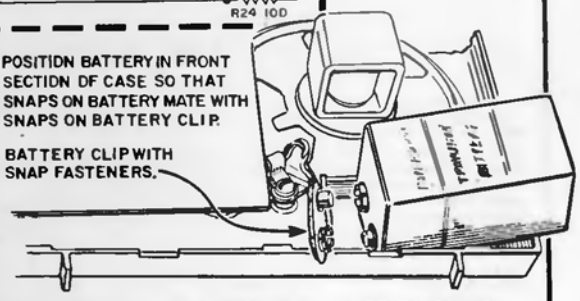


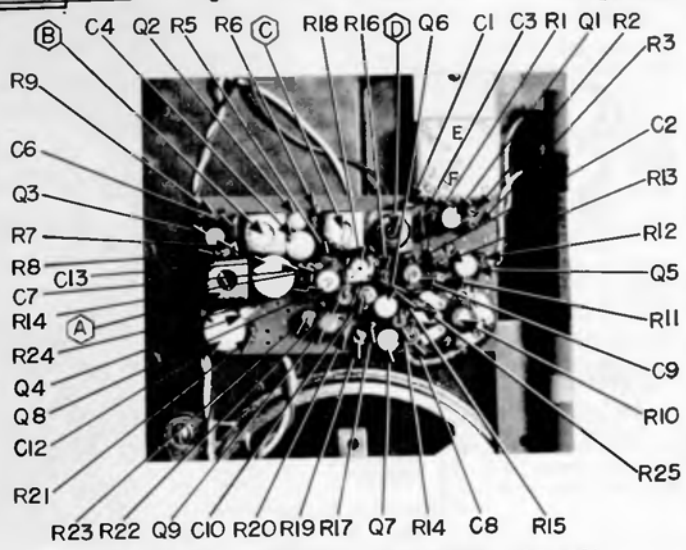


COMPONENT & ALIGNMENT LOCATIONS, TOP VIEW

**Admiral®** Chassis 10J1, Model YD257

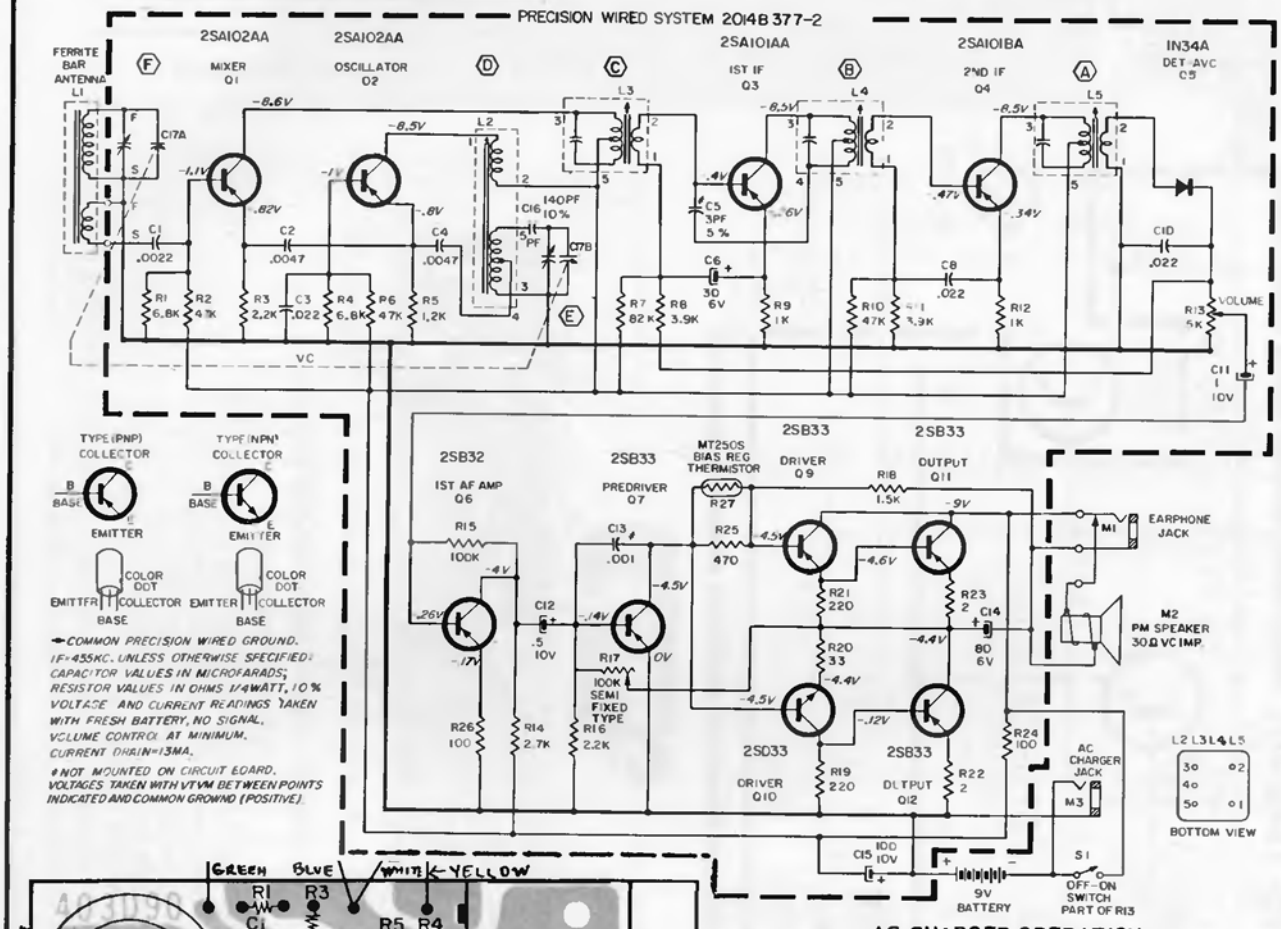


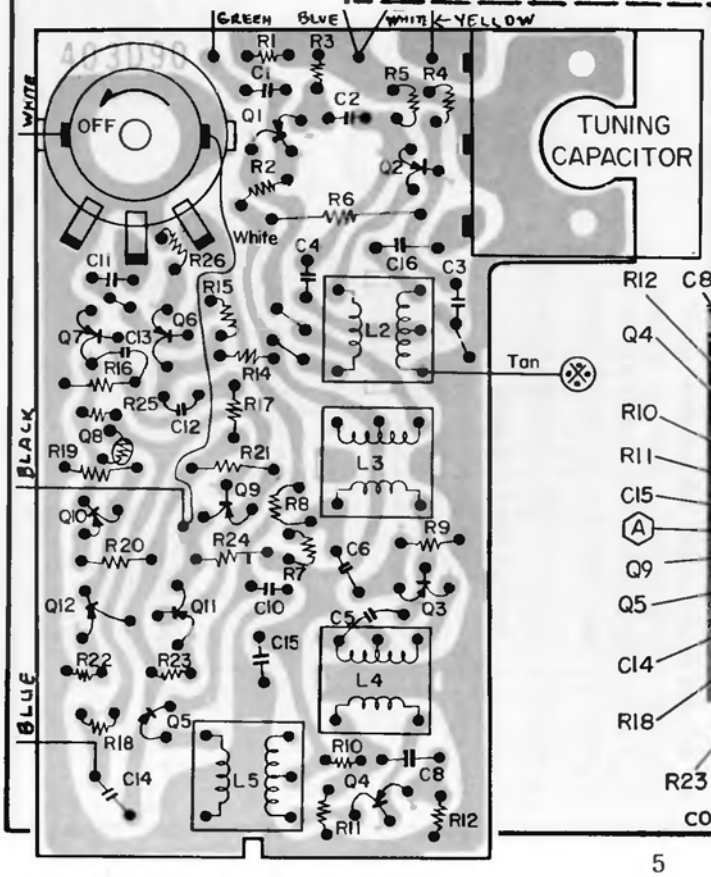


## AC CHARGER OPERATION

Plug the AC Charger into the jack on the radio and into a wall outlet and the radio operates from ordinary AC house current—little battery drain. After using radio outdoors (from battery), plug in the AC charger with radio turned "OFF" and the AC Charger will restore power to the radio battery. The AC Charger will extend the useful life of the transistor radio battery many times its normal expectancy.

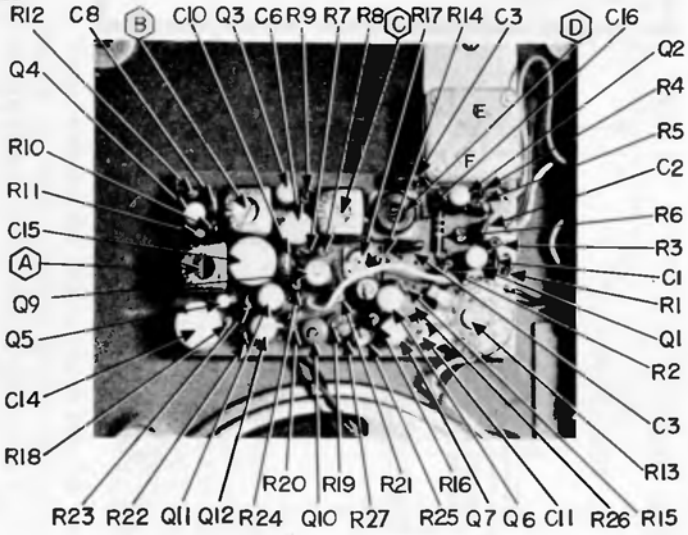


COMPONENT & ALIGNMENT LOCATIONS, TOP VIEW

**Admiral**

Chassis 2B2, Models YG1027, YG1029, YG1037, YG1047, YG1057

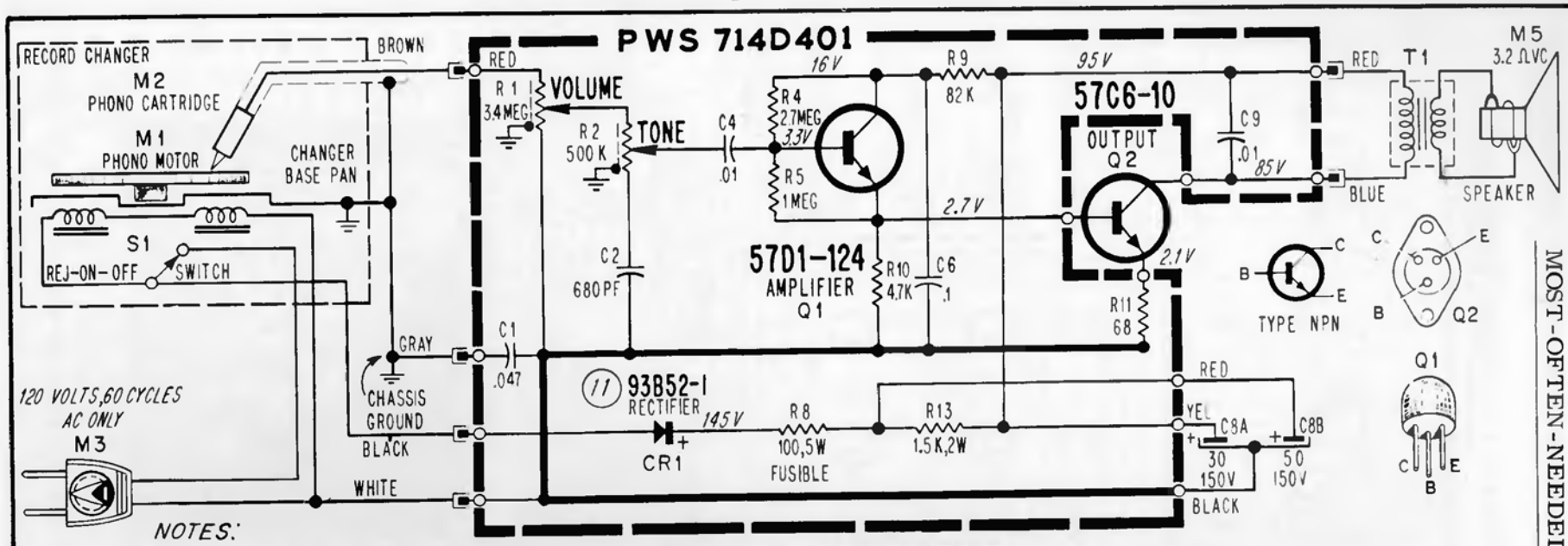


NOTES:

ALL RESISTOR VALUES IN OHMS AND CAPACITOR VALUES IN MICROFARADS UNLESS OTHERWISE SHOWN. ALL VOLTAGES TAKEN WITH A VACUUM TUBE VOLTMETER WITH RESPECT TO COMMON B- ⊸ COMMON B- ⏚ CHASSIS GROUND

⏚● DENOTES FRAME OF CONTROL IS GROUNDED TO CHASSIS

## NEEDLE REPLACEMENT

Turn Needle Selector handle so that desired needle number ("LP" or "78") faces up. Corresponding needle will be pointing down. Loosen screw at base of needle assembly and slide assembly forward and remove from cartridge. To install new needle assembly, slide lugs of assembly under screw and tighten securely. Needle shaft must rest in centering notch. Be sure new needles are mounted to correct sides of turn-over cartridge.

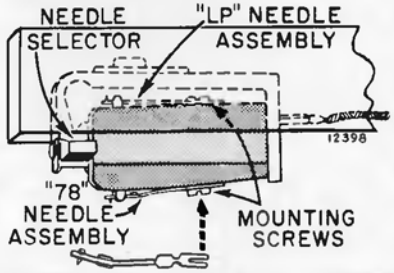


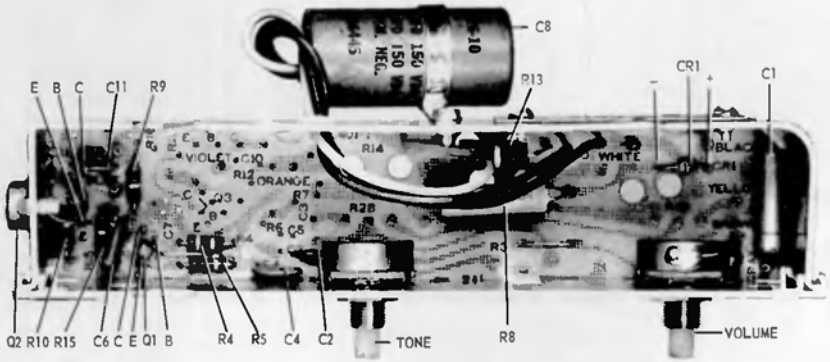


## VIEW OF CHASSIS SHOWING COMPONENTS

## CHASSIS REMOVAL

1. Remove the four turntable hold-down screws.
2. Raise turntable front edge for access to chassis.
3. For chassis removal: Pull off knobs.
4. Remove the nuts on the tone and loudness shafts, while supporting escutcheon.
5. Set escutcheon and control cups off.
6. Pull "plug-in" wire connectors to chassis off.
7. Remove chassis.

# Admiral

**MODEL IDENTIFICATION CHART**

| MODEL | FINISH | RECORD CHANGER | CHASSIS |
|---|---|---|---|
| YG1571 | Walnut | RC7F5M-71AN or RC7W5Q-71AN or RC7W5Q-87AN | 22C5A |
| YG8001 | Walnut | RC7F4E-70AN | *20C5 |
| YG8002 | Mahogany | | |
| YG8001M | Walnut | RC7W4N-94AN or RC7W4N-70AN | |
| YG8002M | Mahogany | | |
| YG8011 | Walnut | RC7F4E-70AN | 22C5 |
| YG8012 | Mahogany | | |
| YG8025 | Maple | | |
| YG8031 | Walnut | RC7F4F-87AN or RC7F4F-71AN | |
| YG8045 | Maple | | |
| YG8051 | Walnut | | |
| YG8061 | Walnut | | |
| YG8075 | Maple | | |
| YG8011M | Walnut | RC7W4N-94AN or RC7W4N-70AN | 22C5 |
| YG8012M | Mahogany | | |
| YG8025M | Maple | RC7W4N-70AN or RC7W4N-86AN | |
| YG8031M | Walnut | RC7W4P-87AN or RC7W4P-71AN | |
| YG8045M | Maple | | |
| YG8051M | Walnut | | |
| YG8061M | Walnut | | |
| YG8075M | Maple | | |
| Radio Information for the Following Stereo Theater Models | | | |
| SMG3001 | Walnut | RC7F4F-71AN or RC7F4F-87AN | 22C5 |
| SMG3002 | Mahogany | | |
| SMG3701 | Walnut | RC7W4P-71AN or RC7W4P-87AN | 22C5A |
| SMG3705 | Maple | | |
| SMG3711 | Walnut | | |
| SRG2201 | Walnut | RC7W4P-71AN or RC7W4P-87AN | *20C5A |
| SMG2201 | Walnut | | 22C5A |
| SMG2205 | Maple | | |

*FM-AM, no provisions for FM Stereo

## GENERAL

Model YG1571 is a table or wall mount unit, while the others are console models of walnut, mahogany or maple finish. An 11" turntable, 4-speed automatic phonograph with a complete system shut-off is used in each model.

The various chassis are completely transistorized and are in one unit. The chassis are basically identical except that the 20C5 and 20C5A chassis do not have FM stereo circuits. No provisions are available for adding this service to the 20C5 and 20C5A chassis. The 22C5 and 22C5A chassis include the necessary circuitry for FM stereo.

The FM and AM, RF and IF sections are all on one precision wired board. FM Stereo and stereo audio circuits are on a second precision wired board. The FM circuit consists of RF, mixer, oscillator, three IF and a ratio detector stage. The AM consists of an auto-dyne converter, two IF and a diode detector stage. The FM stereo section consists of a 19KC amplifier, 38KC doubler, indicator control stage, and four diodes for FM Stereo detection. Six transistors are used for each stereo audio amplifier section. Attenuator type bass and treble controls along with loudness and balance controls are part of each stereo amplifier. The last three stages are direct coupled for both AC and DC current. Negative feedback is provided from the output to the base of the predriver. The output circuit is complimentary symmetry type.

Chassis 22C5, A, 20C5, A

Circuit diagram on pages 8 and 9; other service material on page 10.

## SPEAKER WIRING SCHEMATICS

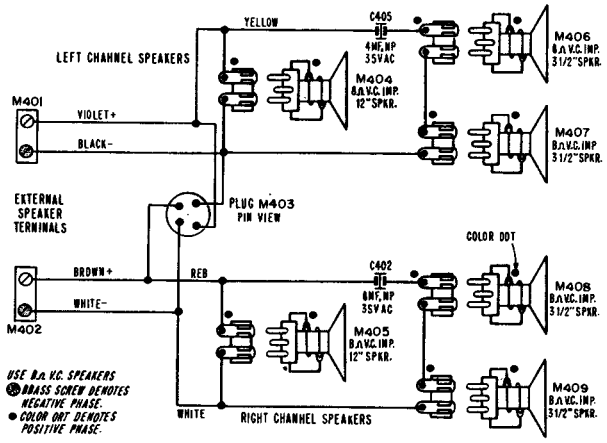


**SPEAKER WIRING FOR 'G8031 & M, 45 & M, 51 & M, 61 & M, 75 & M.**

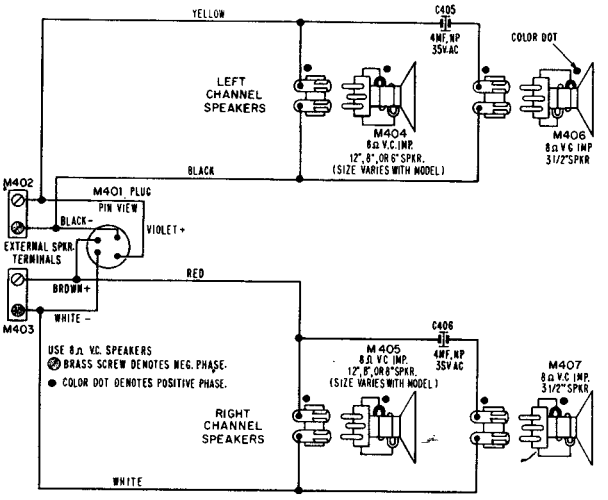


**SPEAKER WIRING FOR YG1571, YG800 & M, YG8010 & M, YG8020 & M SERIES.**

**Admiral**

Chassis 22C5,A, Schematic Diagram
(Chassis 20C5,A, are similar less FM stereo)

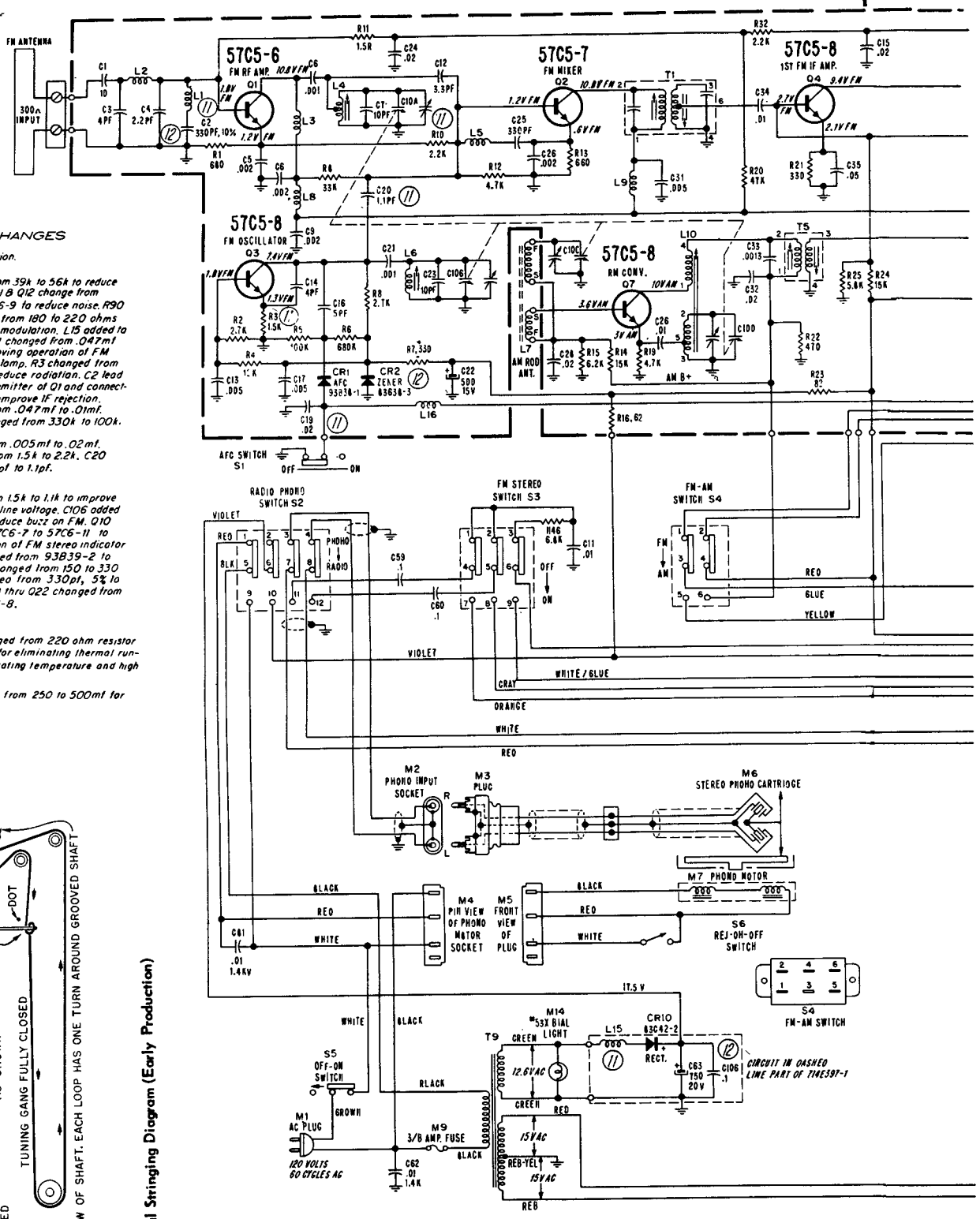


RUN CHANGES

(10) Start of production.

(11) R29 changed from 39k to 56k to reduce noise on AM. Q11 & Q12 change from 57C6-4 to 57C6-9 to reduce noise. R90 & R95 changed from 180 to 220 ohms to reduce cross-modulation. L15 added to reduce buzz. C71 changed from .047mf to .1mf for improving operation of FM stereo indicator lamp. R3 changed from 2.7k to 1.5k to reduce radiation. C2 lead removed from emitter of Q1 and connected to ground to improve IF rejection. C47 changed from .047mf to .01mf. R59 & R61 changed from 330k to 100k.

C19 changed from .005mf to .02mf. R10 changed from 1.5k to 2.2k. C20 changed from 2pf to 1.1pf.

(12) R3 changed from 1.5k to 1.1k to improve operation at low line voltage. C106 added across C83 to reduce buzz on FM. Q10 changed from 57C6-7 to 57C6-11 to improve operation of FM stereo indicator lamp. CR2 changed from 93B39-2 to 93B39-3. R7 changed from 150 to 330 ohms. C2 changed from 330pf, 5% to 330pf, 10%. Q19 thru Q22 changed from 57C6-2 to 57C6-8.

(13) R90 & R95 changed from 220 ohm resistor to a Thermistor, for eliminating thermal runaway at high operating temperature and high line voltage

(14) C96 was changed from 250 to 500mf for reducing hum.

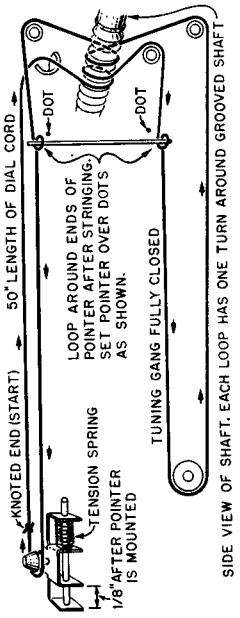


**Dial Stringing Diagram (Early Production)**

NOTES:

1. VOLTAGES MEASURED WITH VTVM WITH RESPECT TO CHASSIS GROUND. NO SIGNAL, 120V AC LINE. VOLTAGES AT FM RF MIXER, IF & MX STAGES TAKEN WITH REFERENCE VOLTAGE OF 10.4 AT CR2. VOLTAGE MAY VARY BY 10%.
2. UNLESS OTHERWISE SPECIFIED CAPACITOR VALUES IN MICROFARADS.
3. MOUNT IF & MULTIPLEX TRANSFORMER SO DIMPLE OR RED DOT ON CANS FACE REAR OF CHASSIS.
4. GREEN DOT ON BOTTOM OF IF & MULTIPLEX TRANSFORMER BASES INDICATES PIN 1.
5. ALL RESISTORS ARE 1/2 WATT, 10% EXCEPT AS SPECIFIED.

ADMIRAL Chassis 22C5, A, Schematic Diagram, Continued

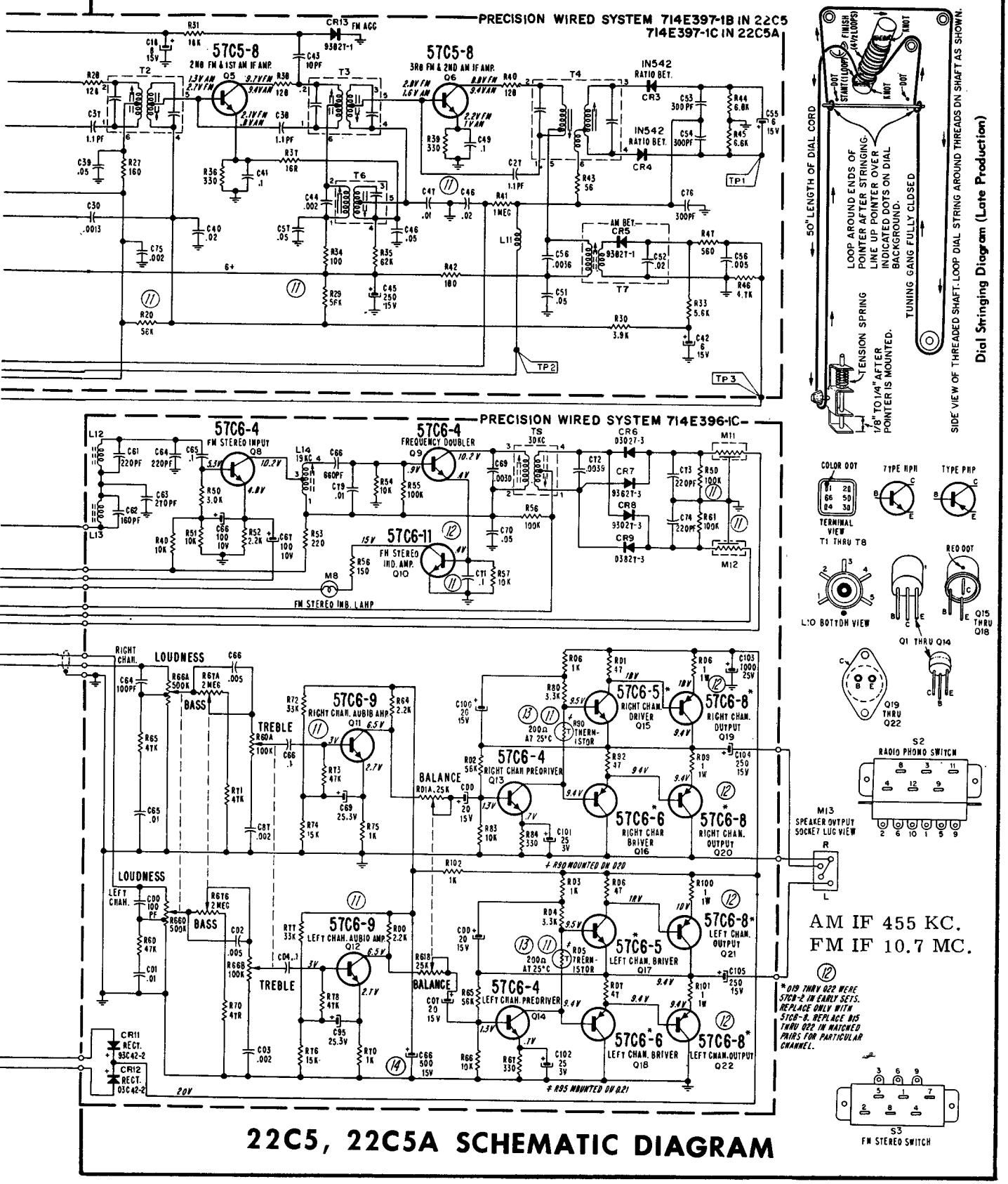


## 22C5, 22C5A SCHEMATIC DIAGRAM

## ADMIRAL Chassis 20C5, A, 22C5, A, Service Information, Continued

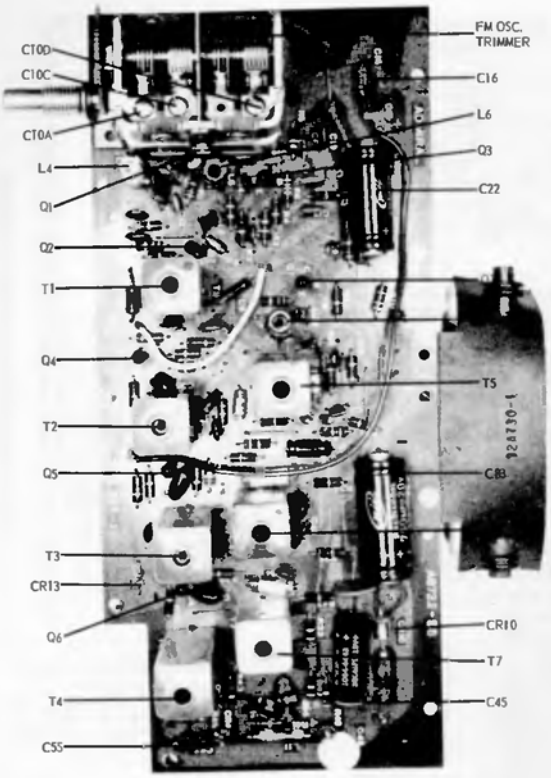


Top View of FM-AM, RF & IF Section

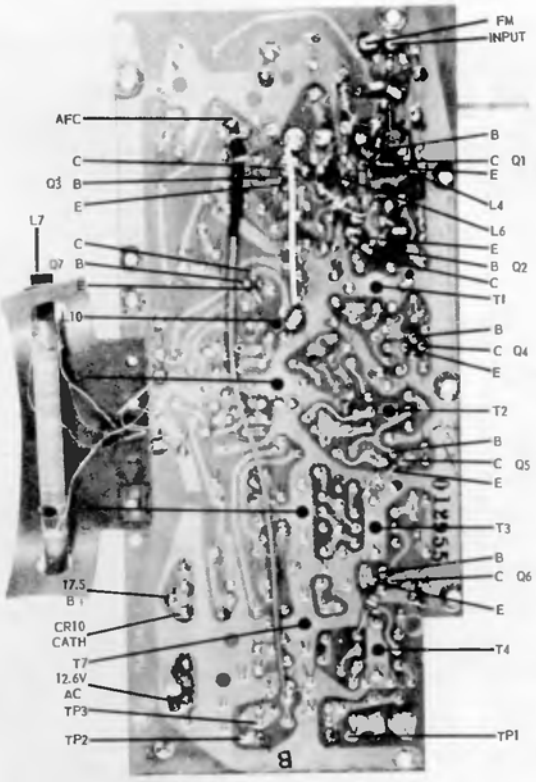


Bottom View of FM-AM, RF & IF Section

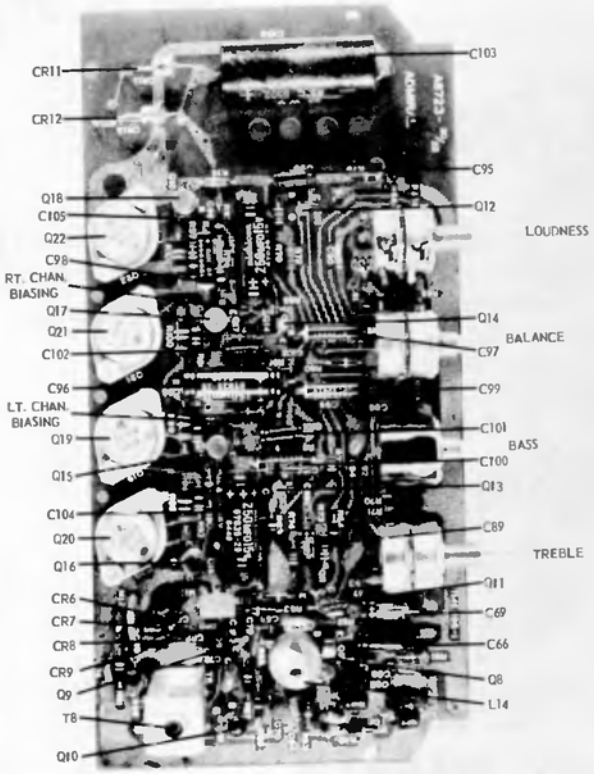


Top View of FM Stereo and Stereo Amp Section

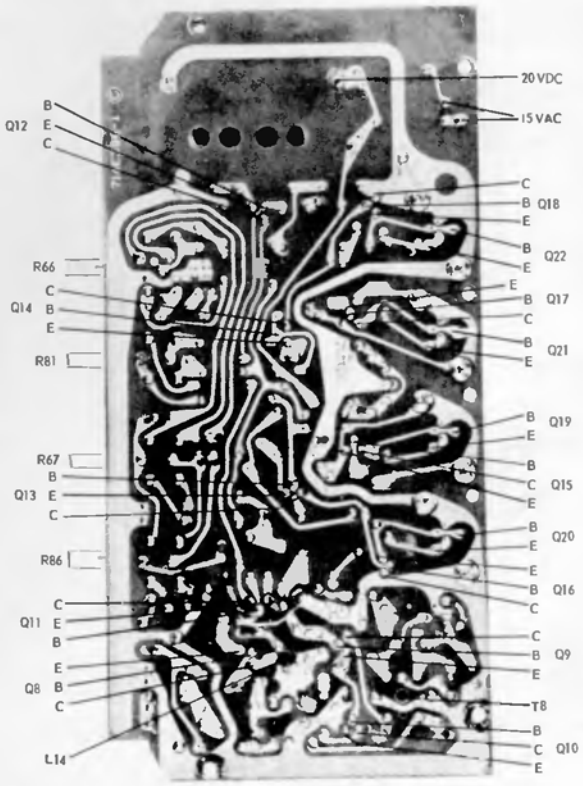


Bottom View of FM Stereo and Stereo Amp Section

# Admiral

Chassis 4E4

Models YG1507, YG1527, YG1531

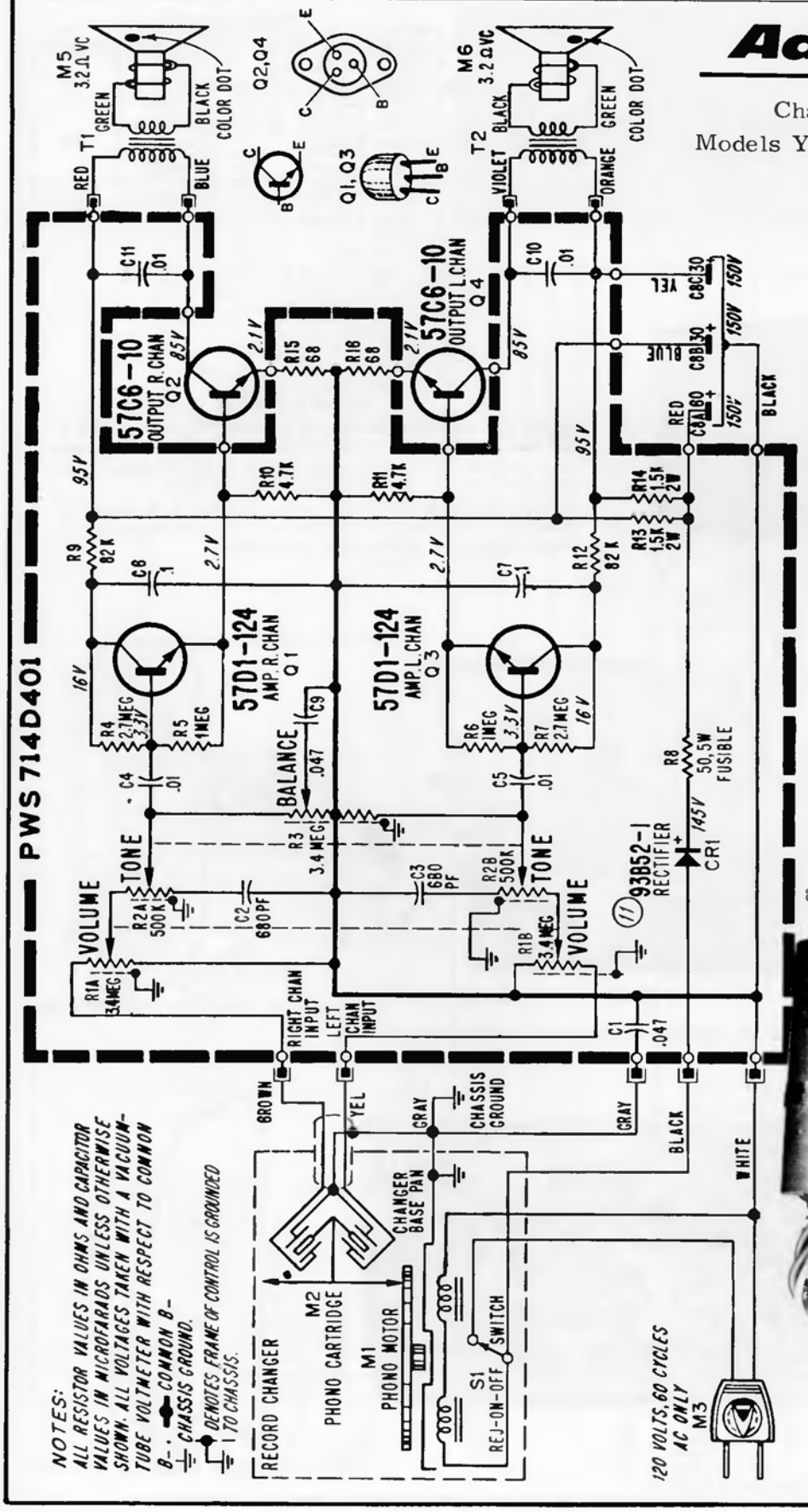


## CHASSIS REMOVAL

1. Remove the four turntable hold-down screws.
2. Raise turntable front edge for access to chassis.
3. For chassis removal: Pull of knobs.
4. Remove the nuts on the tone and loudness shafts, while supporting escutcheon.
5. Set escutcheon and control cups off.
6. Pull "plug-in" wire connectors to chassis off.
7. Remove chassis.

VIEW OF CHASSIS SHOWING COMPONENTS

# Admiral

**MODEL CHART**

| MODEL | NAME | FINISH | CHASSIS |
|---|---|---|---|
| YG827 | Kimberly | Tan | 5V6A |
| YG829 | Kimberly | Charcoal | |
| YG837 | Dunbar | Brown | 5V6 |
| YG839 | Dunbar | Charcoal | |
| YG841 | Aurora | Walnut | |
| YG851 | Galaxy | Walnut | 5V6A |
| YG861 | Golden Classic | Walnut | 5W6 |

(For circuit diagram see next page, directly at right)

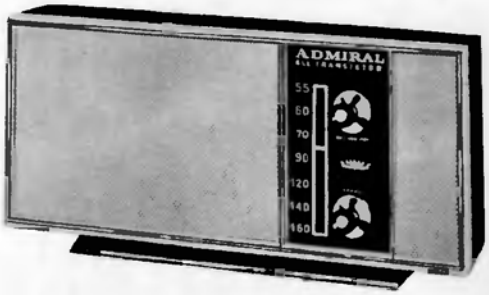


YG830 SERIES

**SERVICE HINT**

Severe hum on these chassis can be caused by a breakdown of the Output Transistor Q5, No. 57C6-14. Should this be encountered, replace the transistor and change R19, 24 ohm, ½ watt resistor to 36 ohm ½ watt for increased reliability.

When servicing the chassis for other reasons, R19 should be changed to 36 ohms to avoid the possibility of damaging Q5. Some chassis will already have this change.

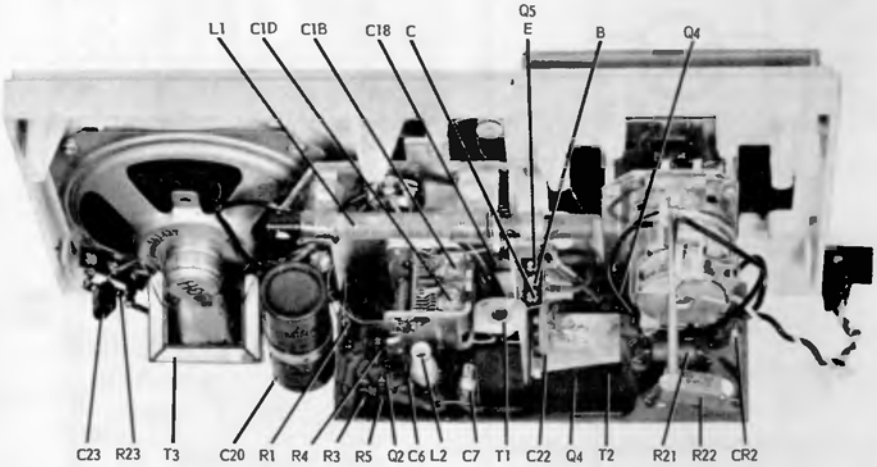


TOP VIEW OF CHASSIS SHOWING ALIGNMENT POINTS AND COMPONENTS

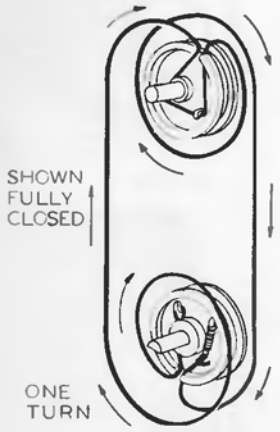


DIAL STRINGING DIAGRAM, 5W6

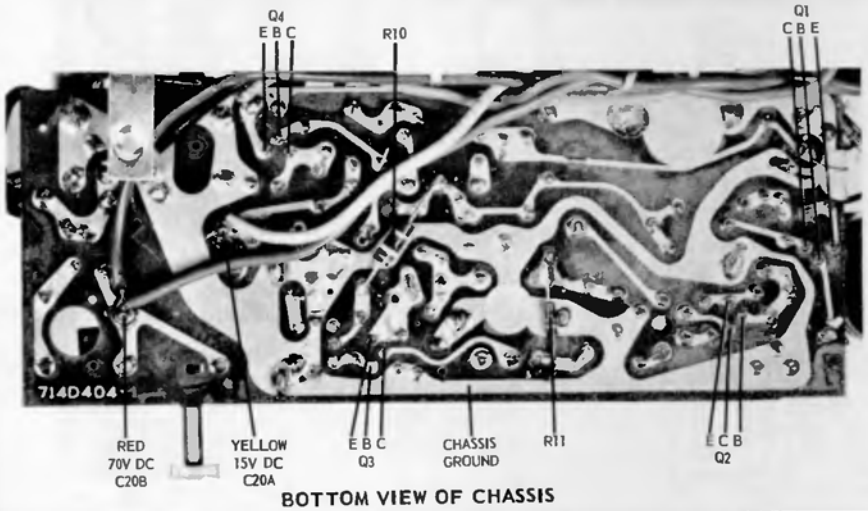


BOTTOM VIEW OF CHASSIS

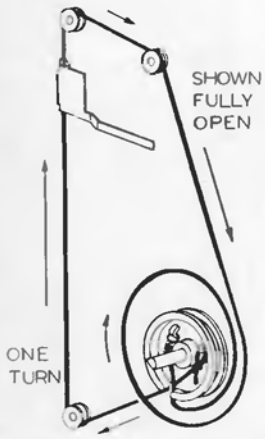


DIAL STRINGING DIAGRAM, 5V6, 5V6A

ADMIRAL Chassis 5V6, 5V6A, 5W6, Schematic Diagram, Continued

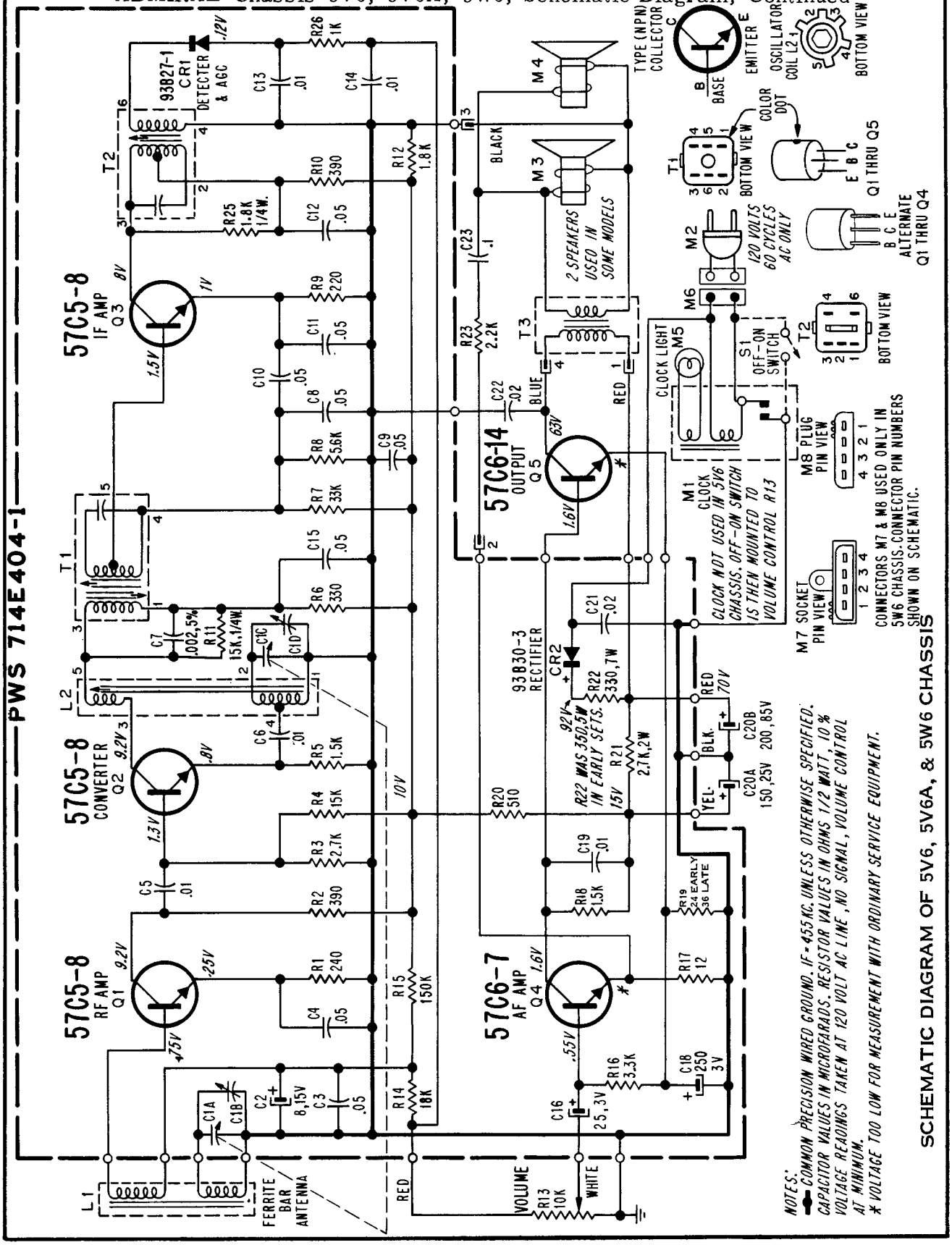


SCHEMATIC DIAGRAM OF 5V6, 5V6A, & 5W6 CHASSIS

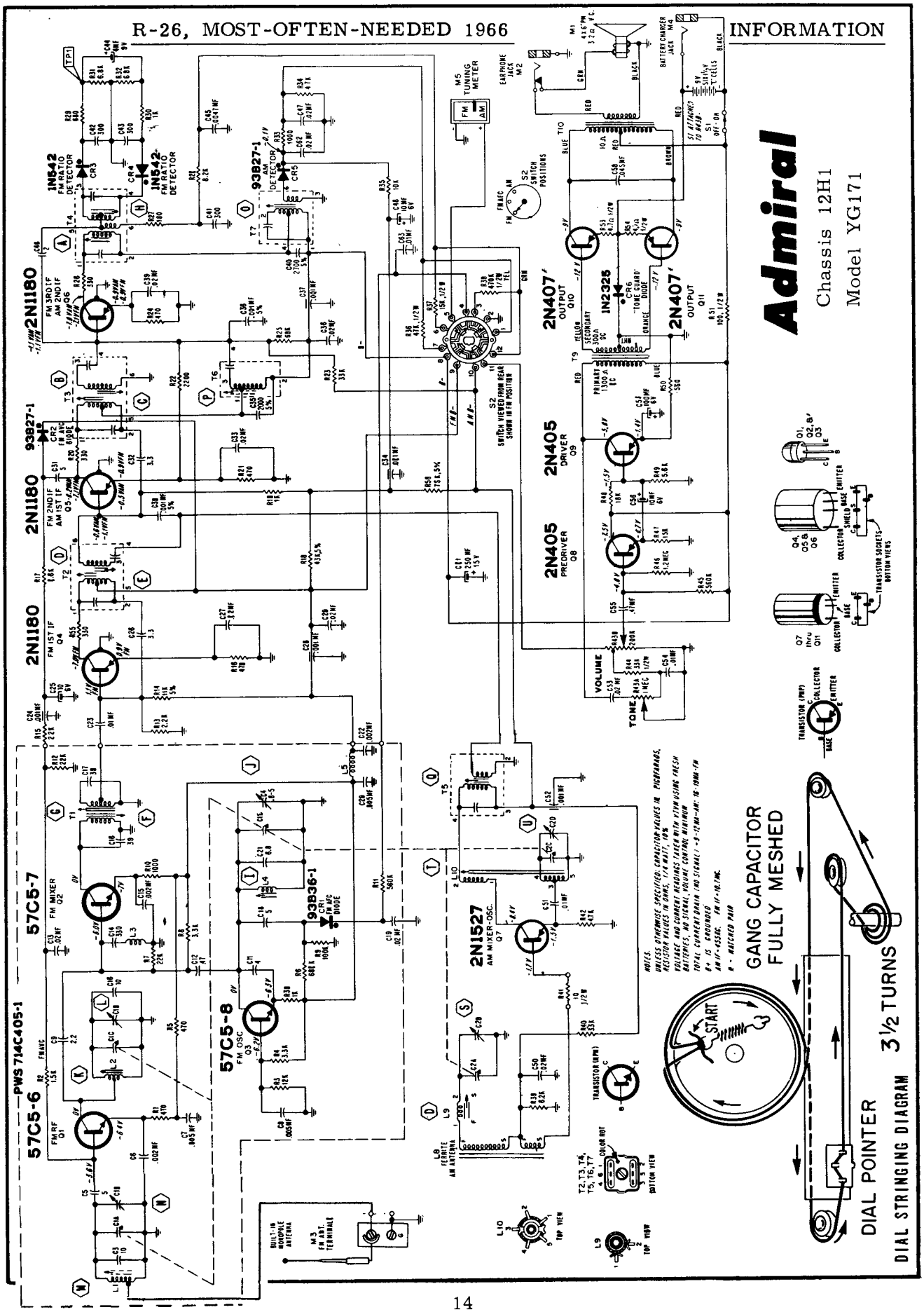
Admiral
Chassis 12H1
Model YG171
DIAL STRINGING DIAGRAM
DIAL POINTER
3½ TURNS
GANG CAPACITOR
FULLY MESHED
START
PWS 714C405-1
57C5-6
57C5-7
57C5-8
2N1180
2N1527
2N405
2N407
1N542
1N2325
93827-1
93836-1
VOLUME
TONE

**Admiral** Chassis 8A4, Models YH301GP, YH302GP

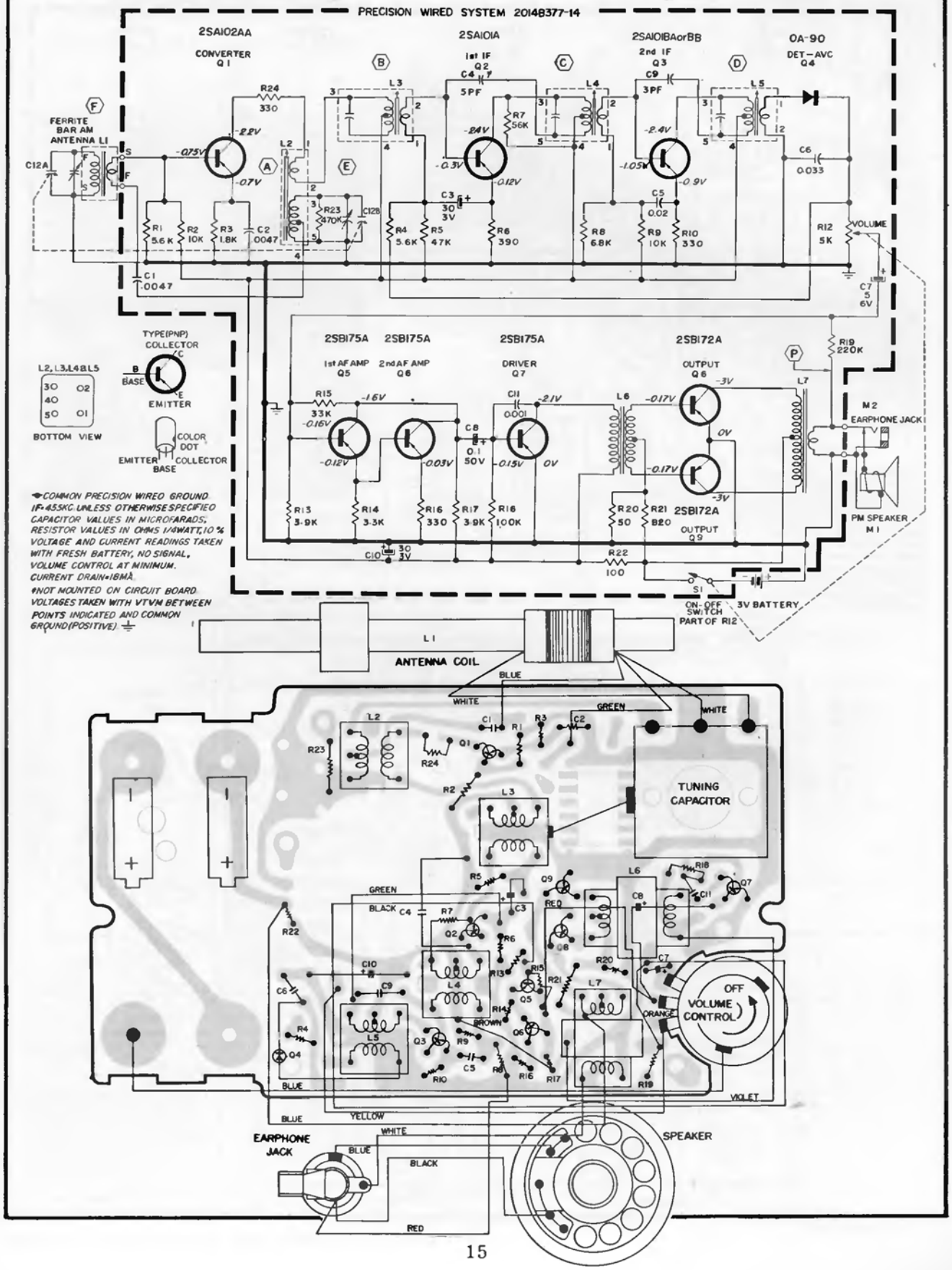

# Admiral

Chassis 8B4, Models YH312, YH313

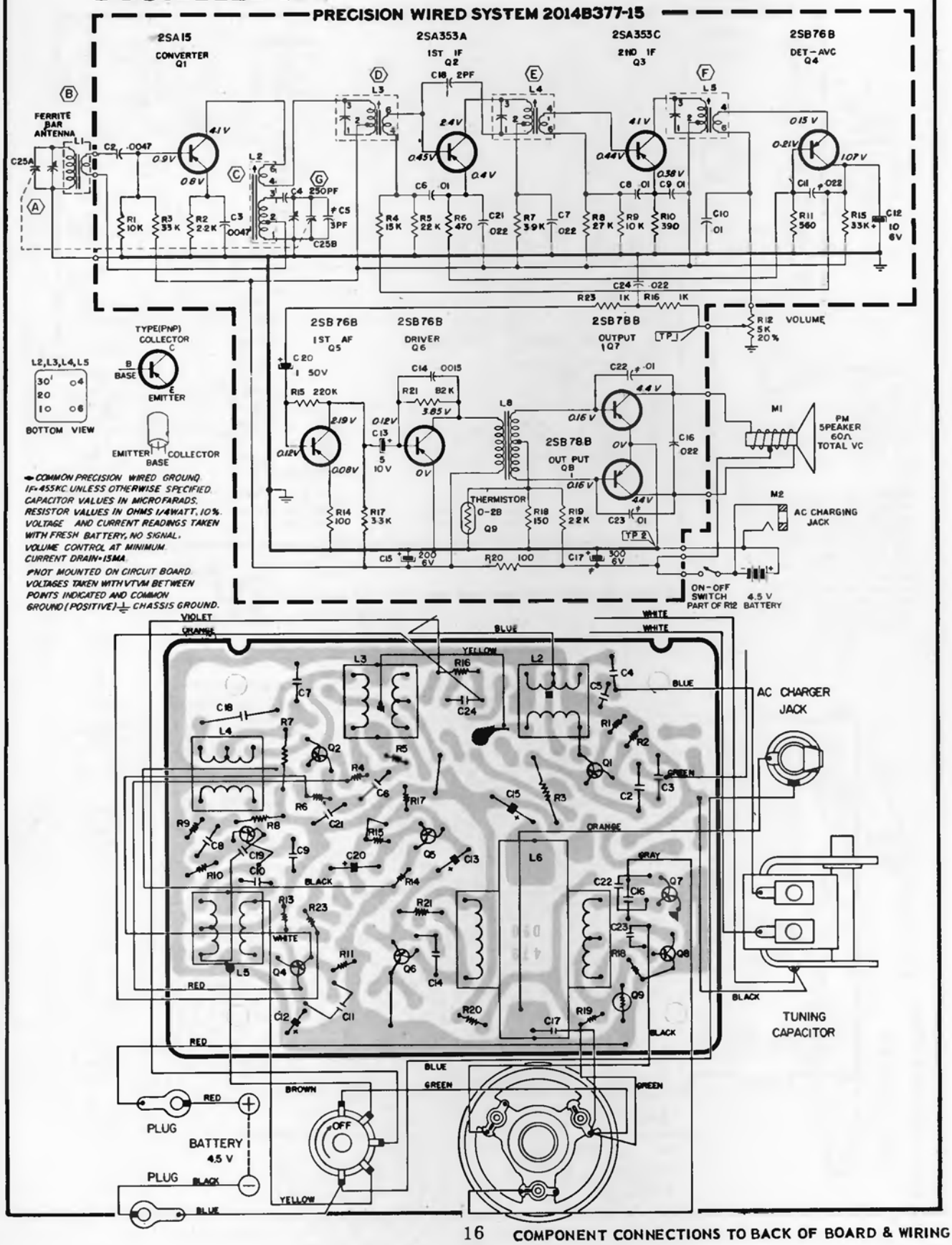

# Admiral

## Chassis 10A2, Model YH321

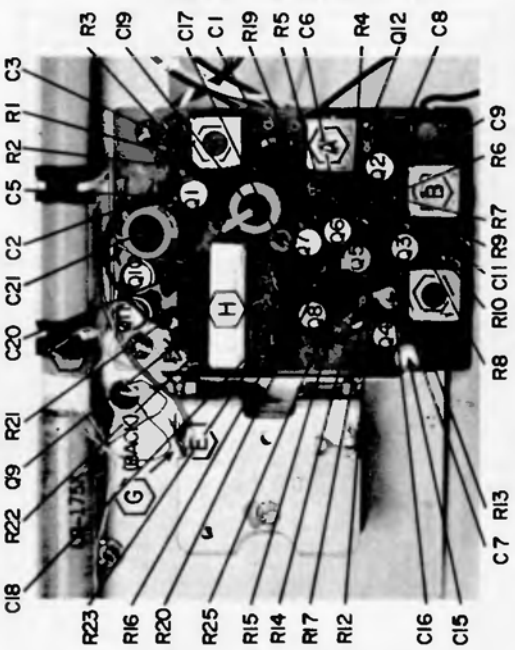


COMPONENT & ALIGNMENT LOCATIONS, TOP VIEW

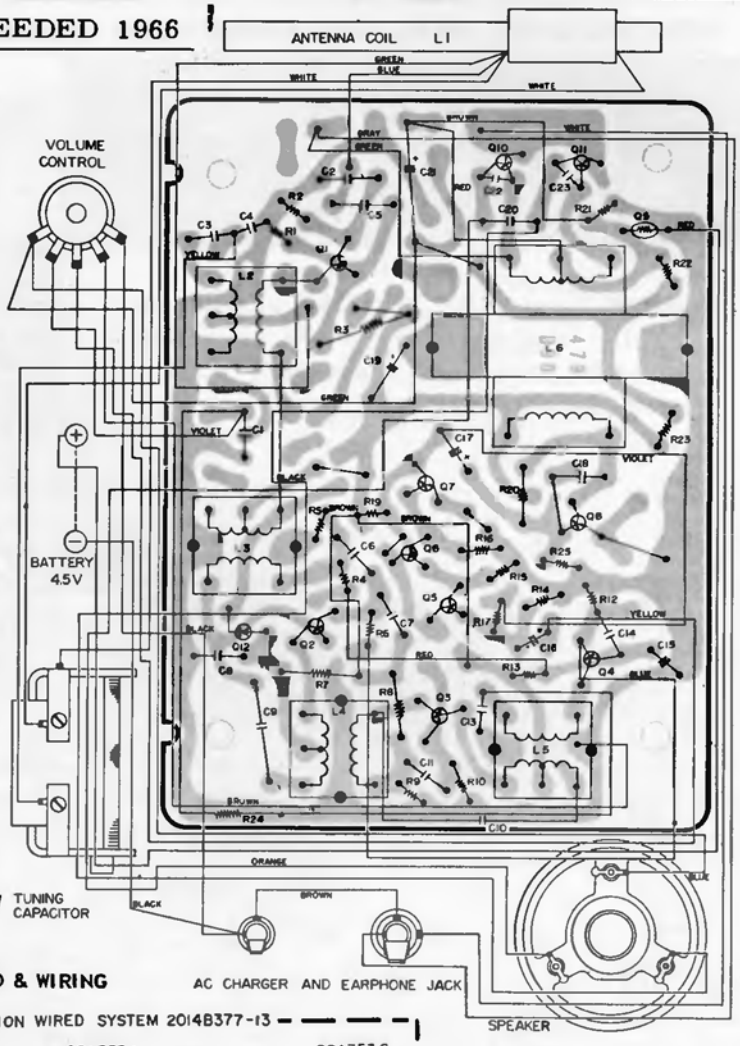


COMPONENT CONNECTIONS TO BACK OF BOARD & WIRING

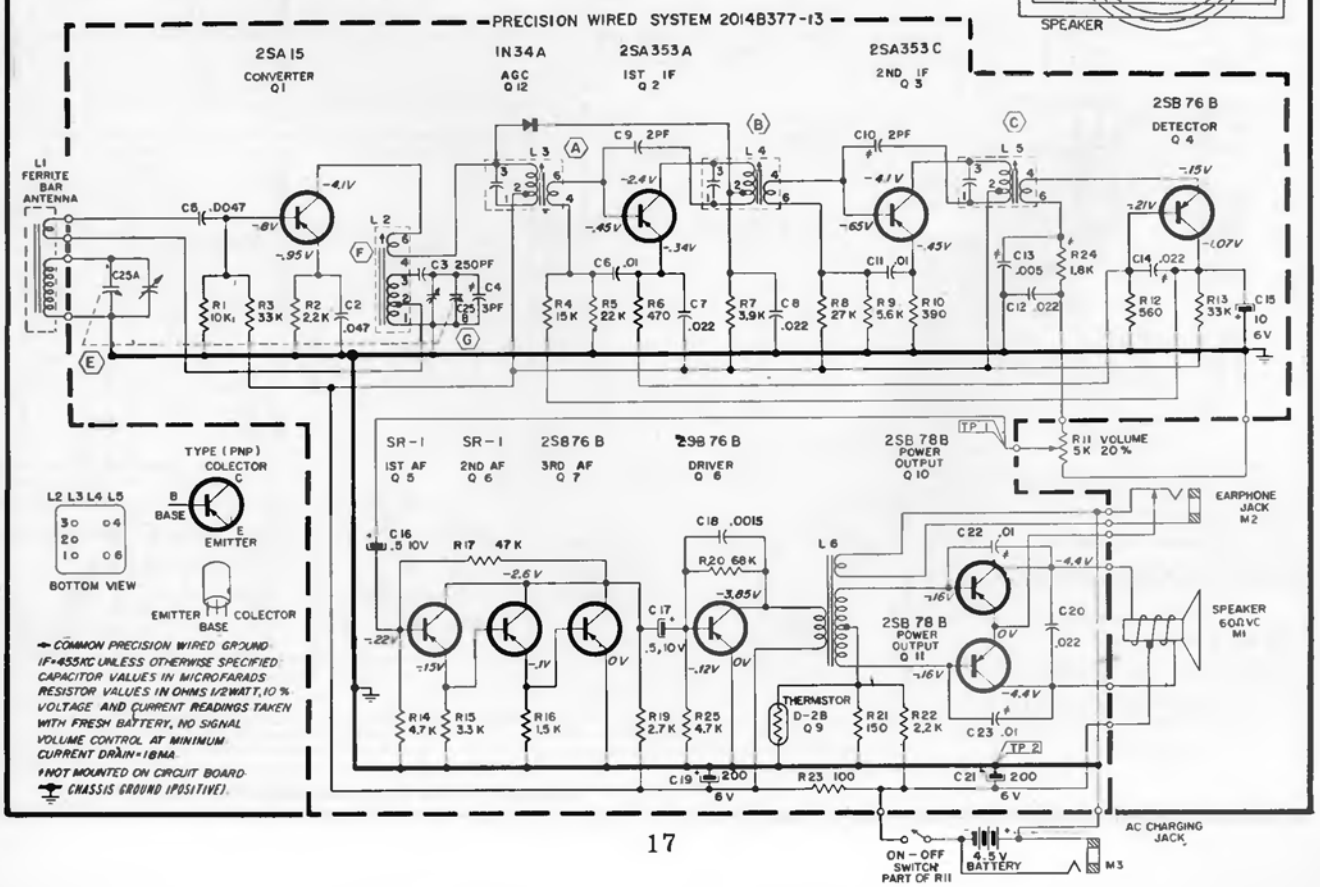

Diagram of 12B2 Tuner across pages 18-19. See page 20 for 4F4 pre-amp and 8L3 power unit diagrams. List of models in chart at right.

**MODEL CHART**

| MODEL | NAME | FINISH | CHASSIS |
|---|---|---|---|
| YG8201 | Brookshire | Walnut | 12B2, 4F4, 8L3 RC7K4K-93AZ |
| YG8215 | Dunhill | Maple | |
| YG8229 | Marseilles | Cherrywood | |

**YG411 IDENTIFICATION CHART**

| MODEL | TYPE | FINISH | CHASSIS |
|---|---|---|---|
| TM441 | Tuner | Walnut | 12B2 |
| PA451 | Pre-amplifier | Walnut | 4F4A |
| PS461 | Power Unit | Walnut | 8L3A |
| SS1501A | Speaker | Walnut | 2 enclosures |
| RP471 | Record Changer | Walnut | RC7K4K-93AZ |
| YG411 | Complete Unit | Walnut | All above |

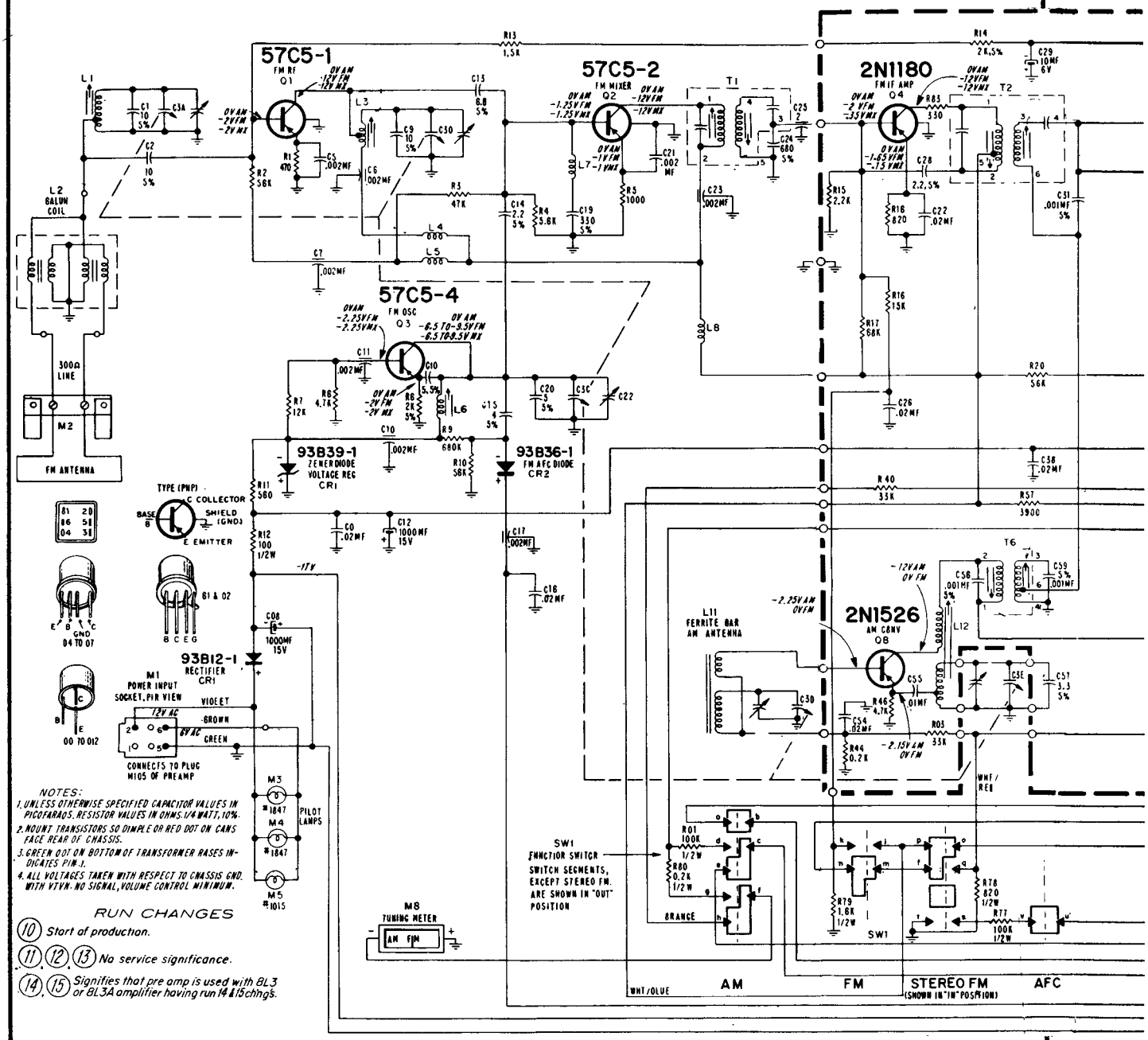


SCHEMATIC FOR 12B2 AM-FM-MX TUNER CHASSIS

## ADMIRAL Chassis 12B2 Tuner Schematic Diagram (Continued)

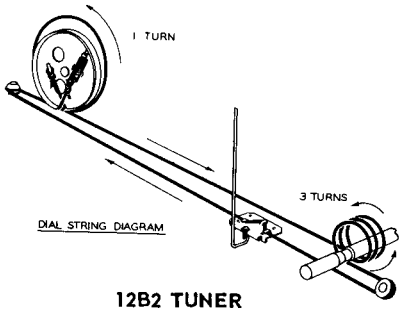


12B2 TUNER

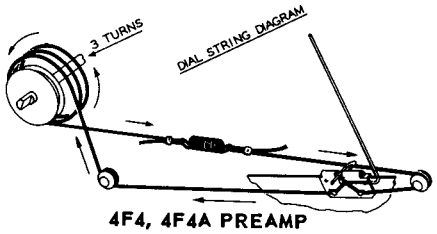


4F4, 4F4A PREAMP

AM IF 455 KC.
FM IF 10.7 MC.

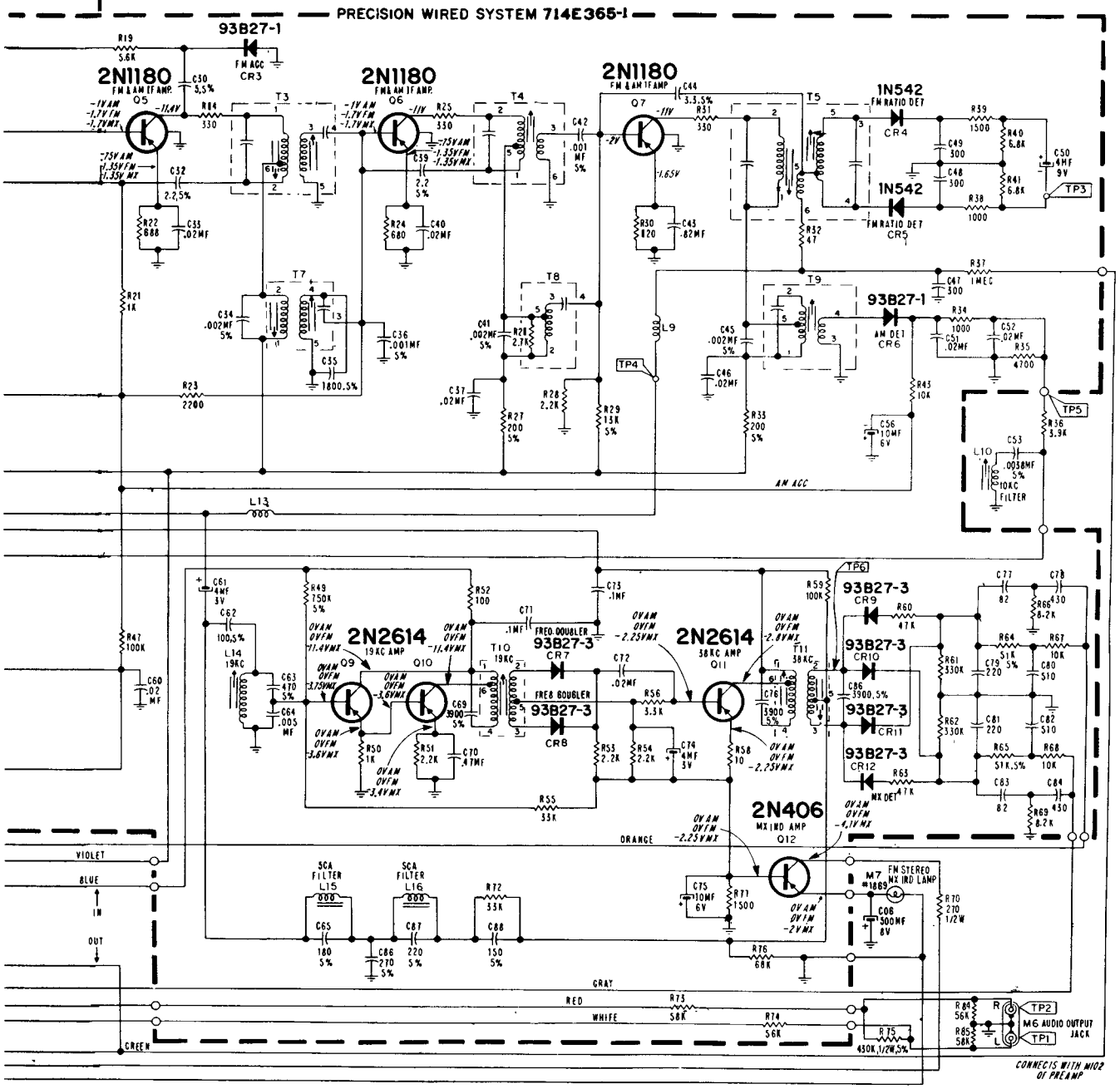

## ADMIRAL 4F4, A, Pre-Amp, and 8L3, A, Power Unit, Continued

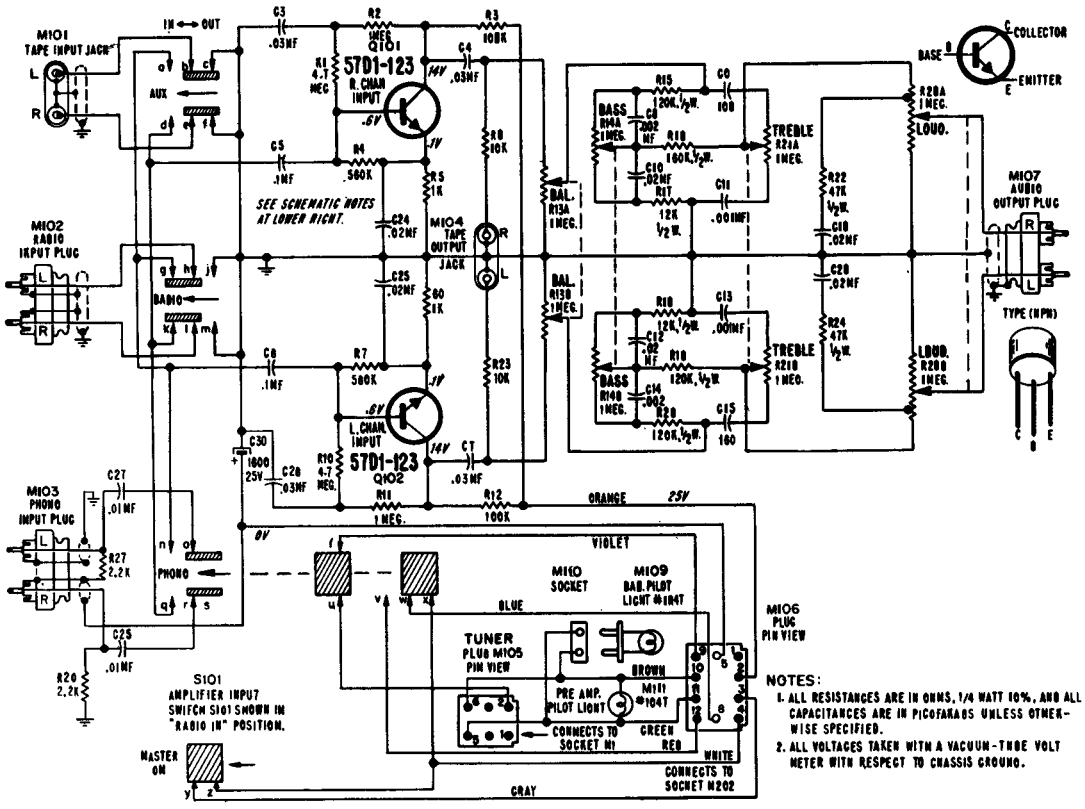


SCHEMATIC FOR 4F4, 4F4A PRE-AMP CHASSIS

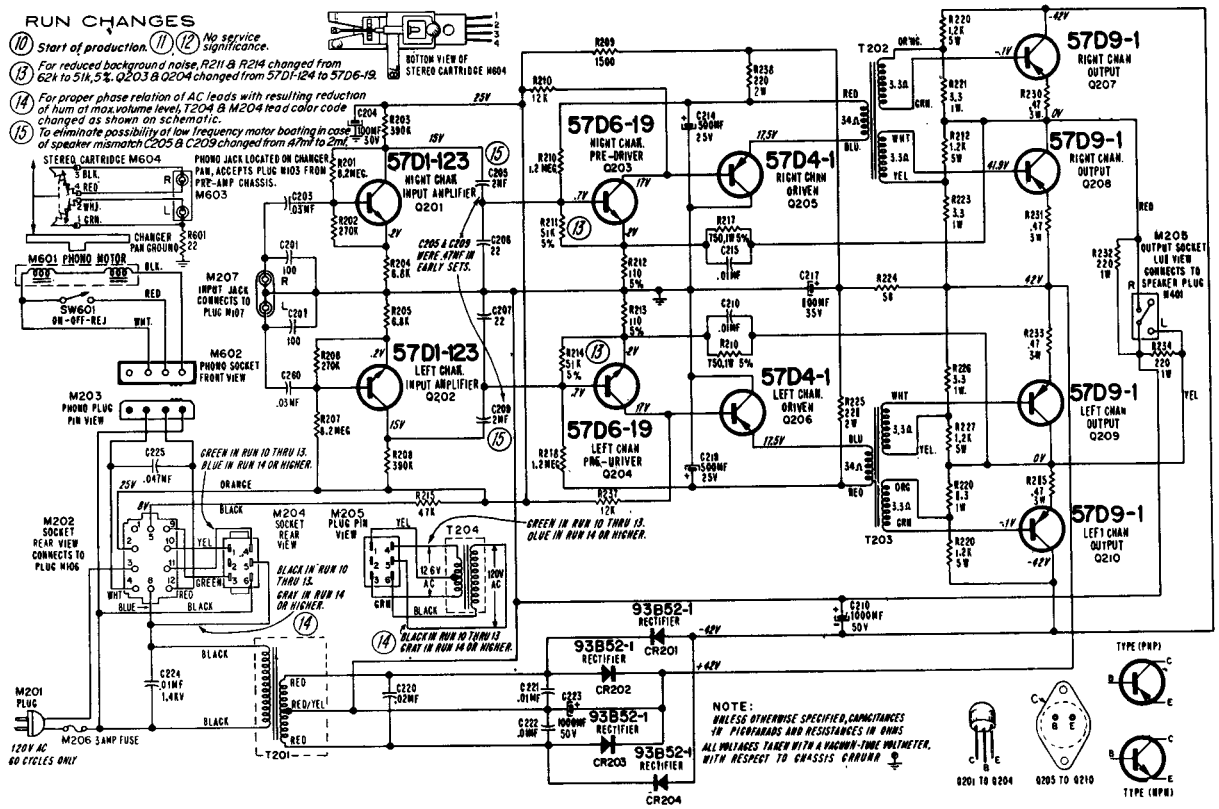


SCHEMATIC FOR 8L3, 8L3A AMPLIFIER - POWER SUPPLY CHASSIS

# Emerson Radio

**MODELS:**
**31T09, 31T10, 31T11**
**31L09, 31L10, 31L11**

Chassis 120791, 120792, 120793, 120794. Similar Chassis 120826, 120828, are also used in some of these models.

31L11

### SERVICING PRECAUTIONS

1) Do not operate the chassis without a loudspeaker or suitable dummy load connected to the secondary of the audio output transformer, since this may result in damage to the audio output transistors.

2) Note that B – (chassis ground) is connected to one side of the power line through R-11. For this reason, an isolation transformer must be used whenever servicing procedures require that a signal be conductively (by direct connection) injected into the receiver, otherwise damage to the chassis may result.

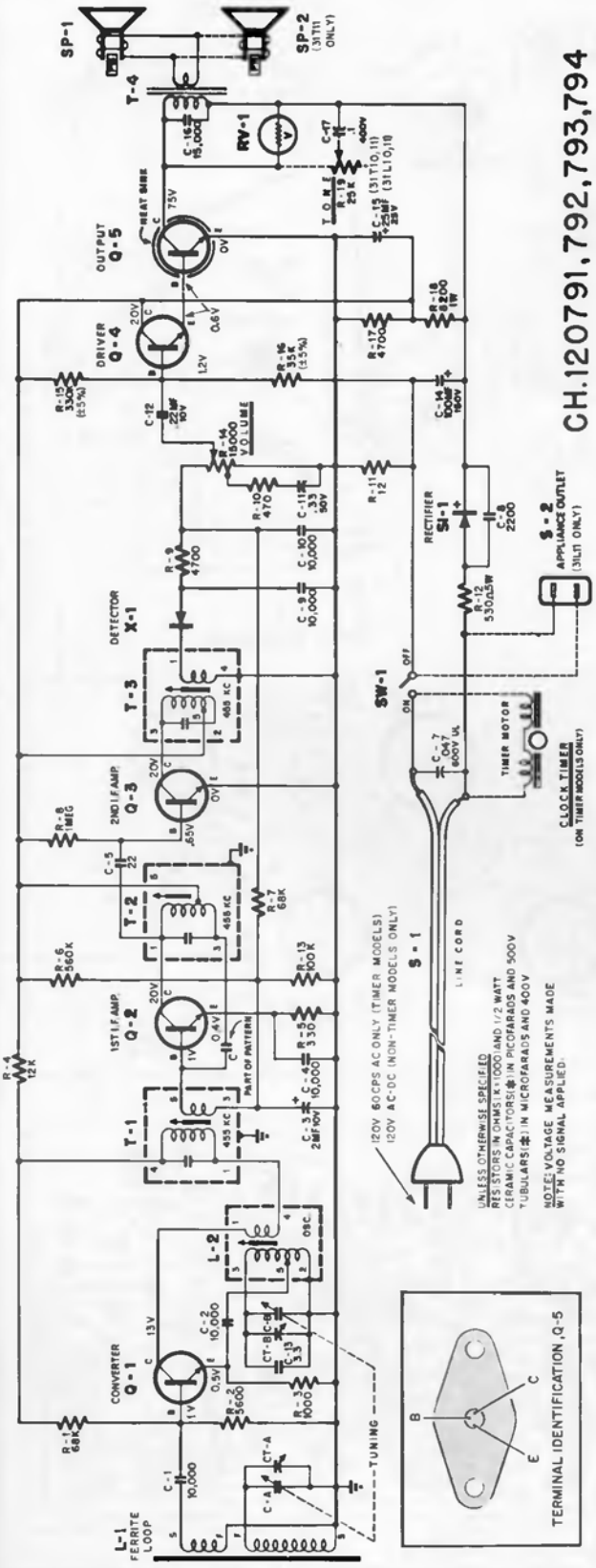


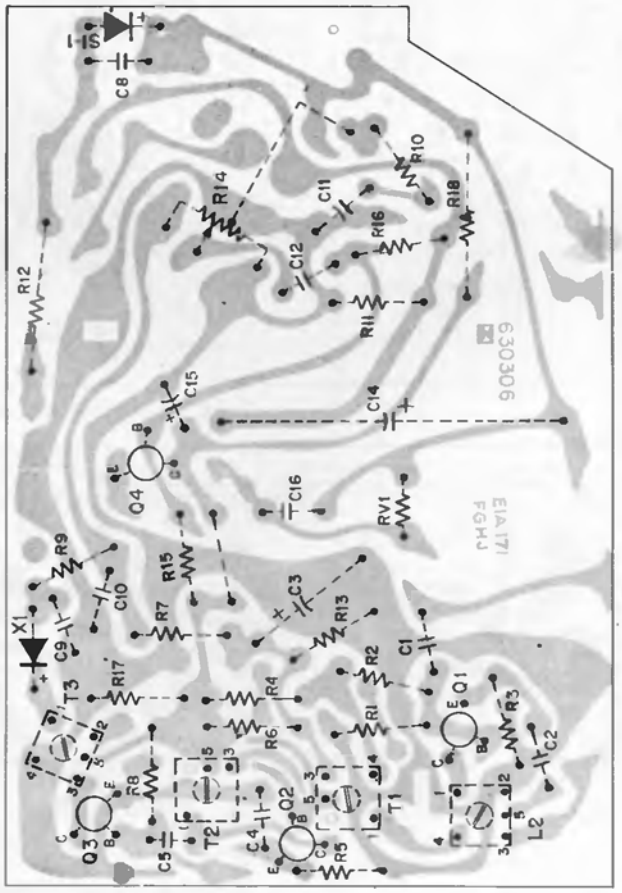


ETCHED CIRCUIT BOARD (BOTTOM VIEW)

EMERSON Chassis 120789, Models 31L07, 31L08
(See adjacent page at right for schematic diagram)

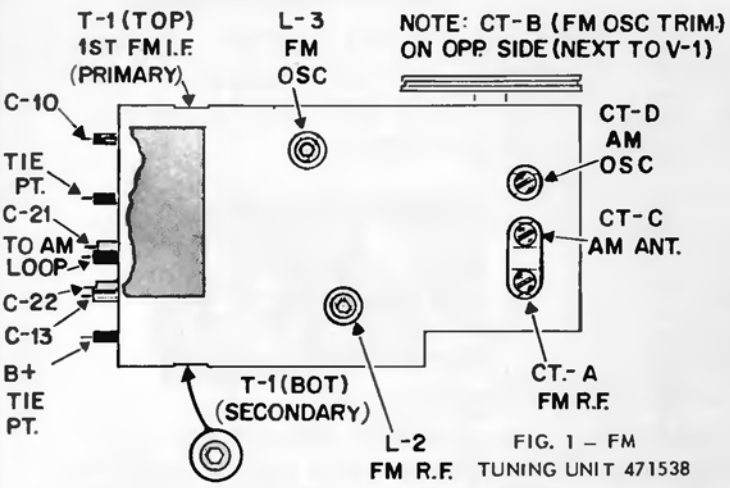


FIG. 1 – FM TUNING UNIT 471538

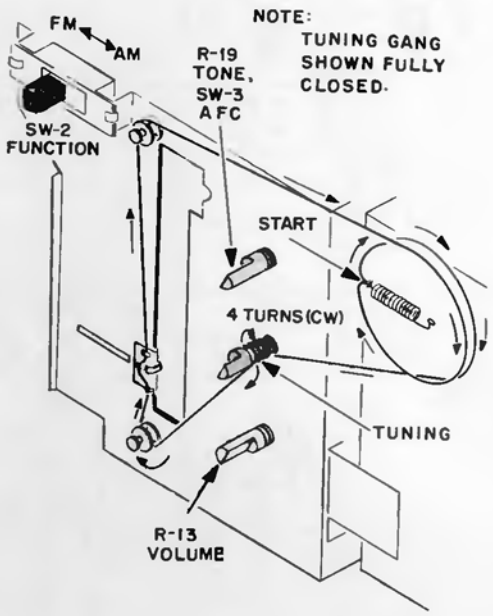


DIAL STRINGING

**REPLACEMENT INFORMATION FM TUNING UNIT 471538**

When removing the FM tuning unit for exchange or replacement, be sure to retain the dial string pulley, associated mounting parts and rubber grommets. New units are supplied by the factory complete with metal cover and vacuum tube, but less the items noted above.

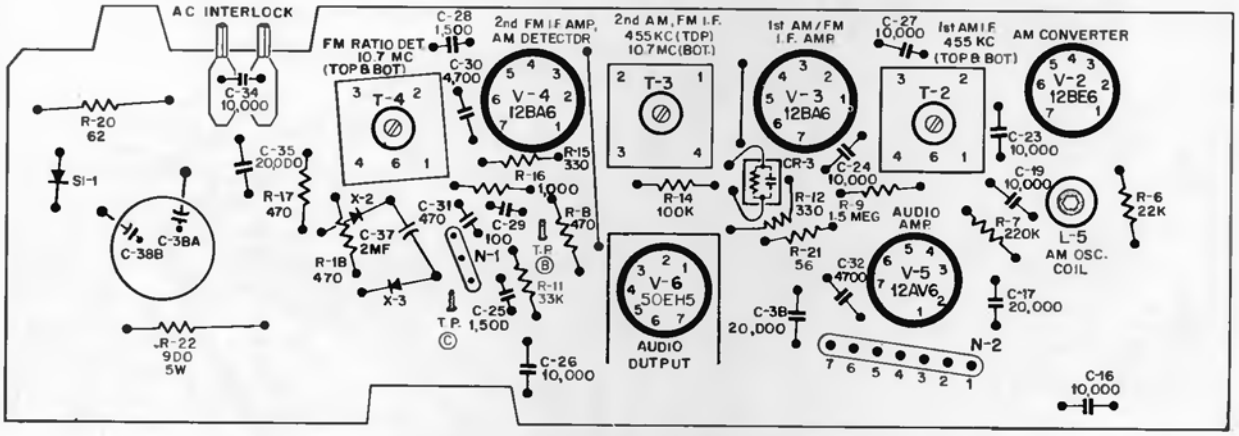


TUBE LOCATIONS AND ALIGNMENT POINTS

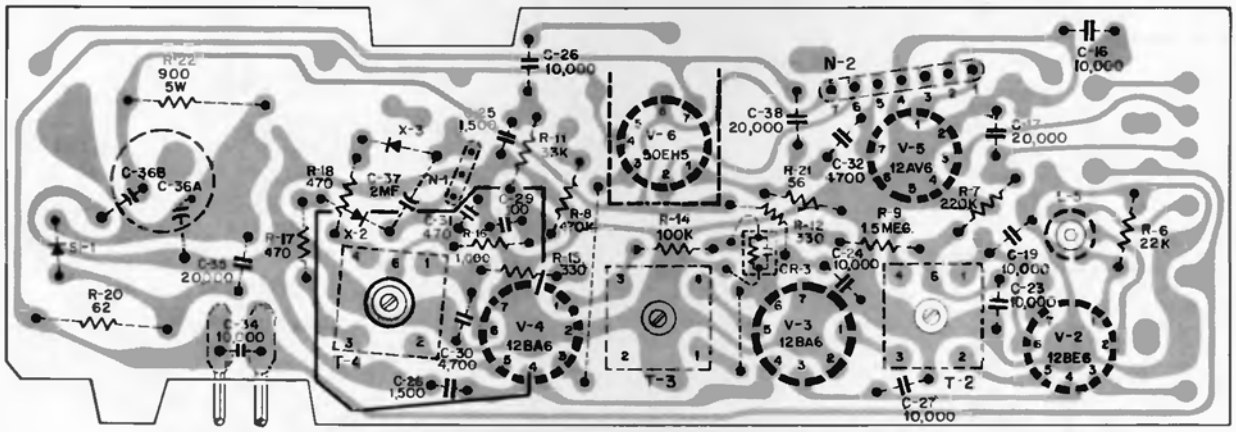


ETCHED CIRCUIT CHASSIS (BOTTOM VIEW)

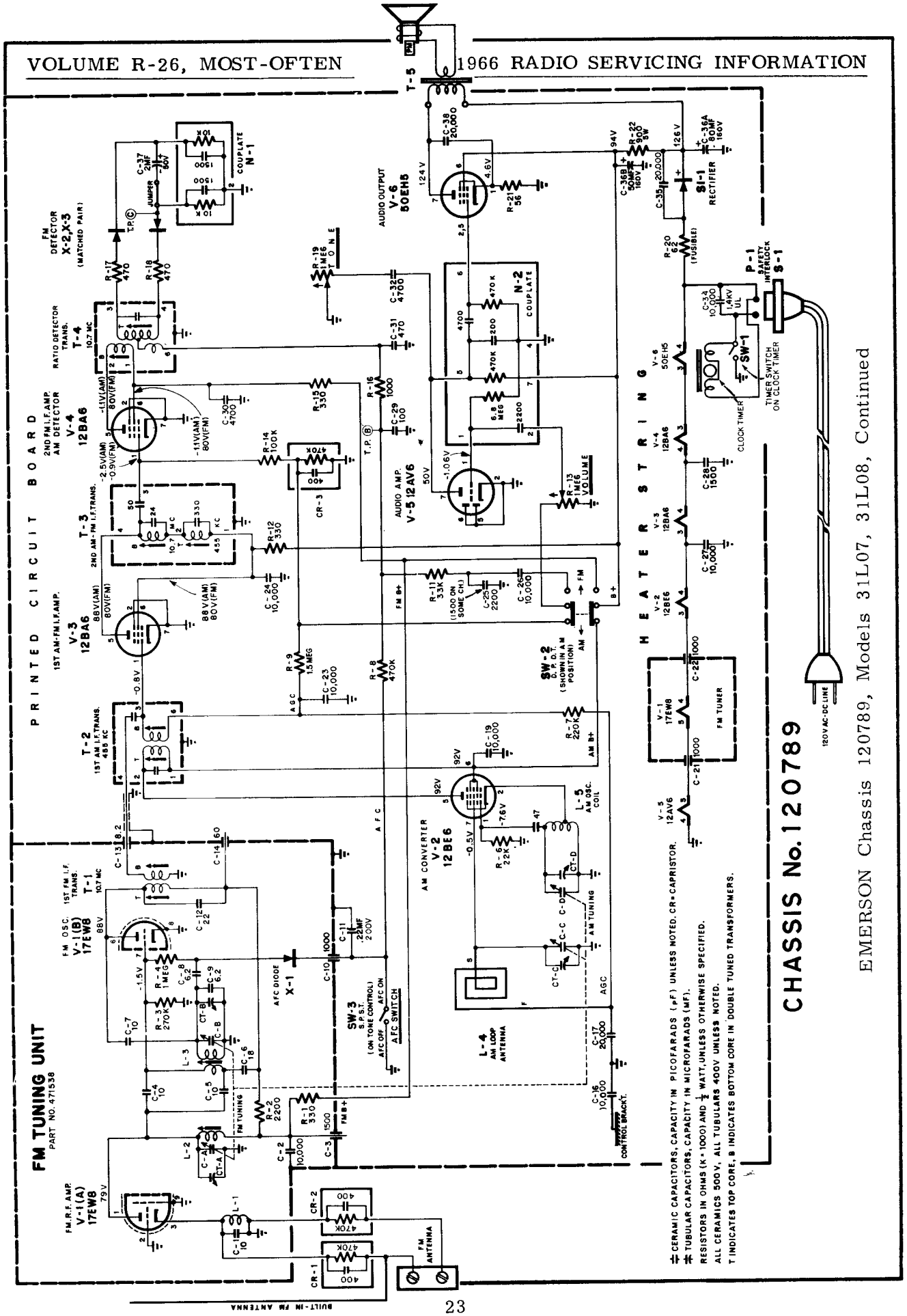


EMERSON Chassis 120789, Models 31L07, 31L08, Continued

# Emerson Radio

MODELS: 31T12, 31T13, 31L12, 31L13, 31L14
CHASSIS: 120818, 120819

(For schematic diagram see page at right)

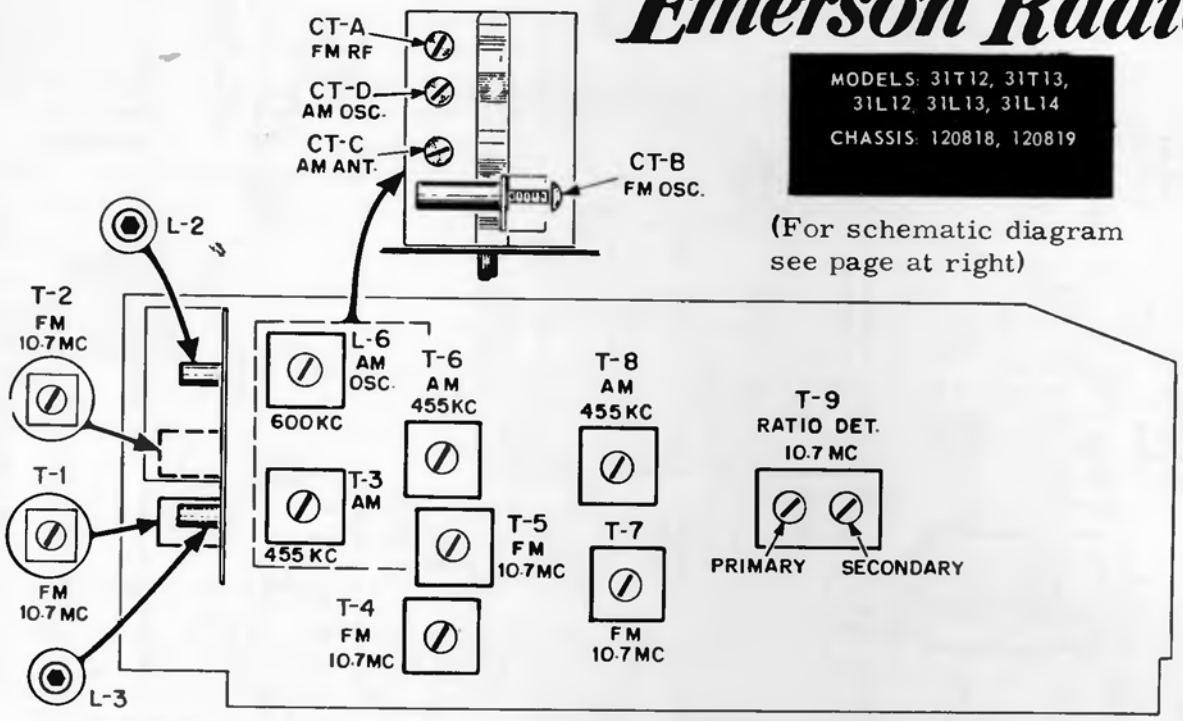


ALIGNMENT POINTS

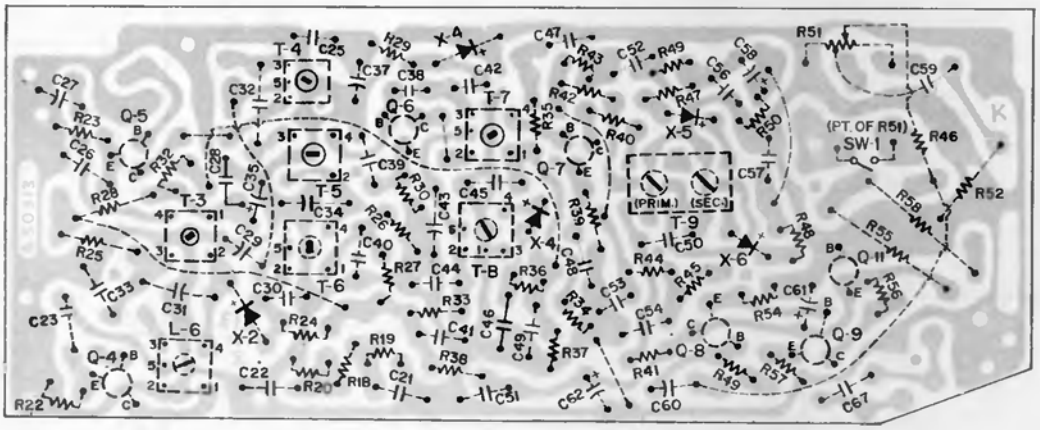

ETCHED CIRCUIT BOARD – MAIN CHASSIS SECTION (BOTTOM VIEW)

DIAL-CORD STRINGING VIEWED FROM FRONT

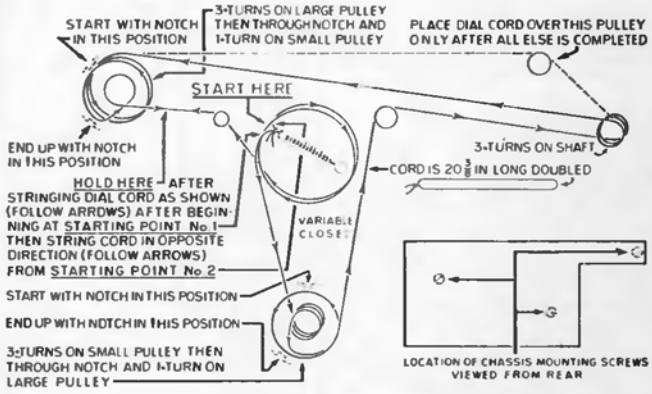


NOTE. WHEN REMOVING OR REPLACING CHASSIS, IT IS RECOMMENDED THAT LEAD DRESSING AND CAPTIVATION BE MAINTAINED.

DIAL STRINGING

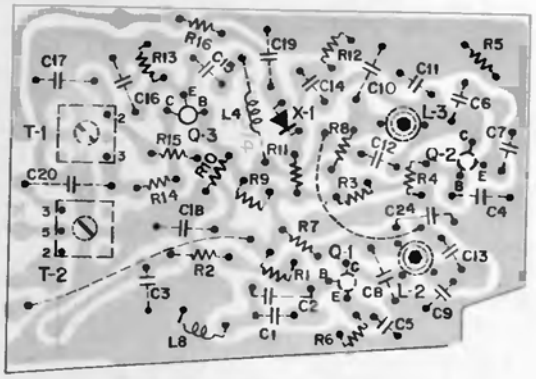

ETCHED CIRCUIT BOARD – TUNING SECTION (BOTTOM VIEW)

EMERSON Chassis 120818, 120819, Models 31L12, 31L13, 31L14, 31T12, and 31T13, continued from page at left

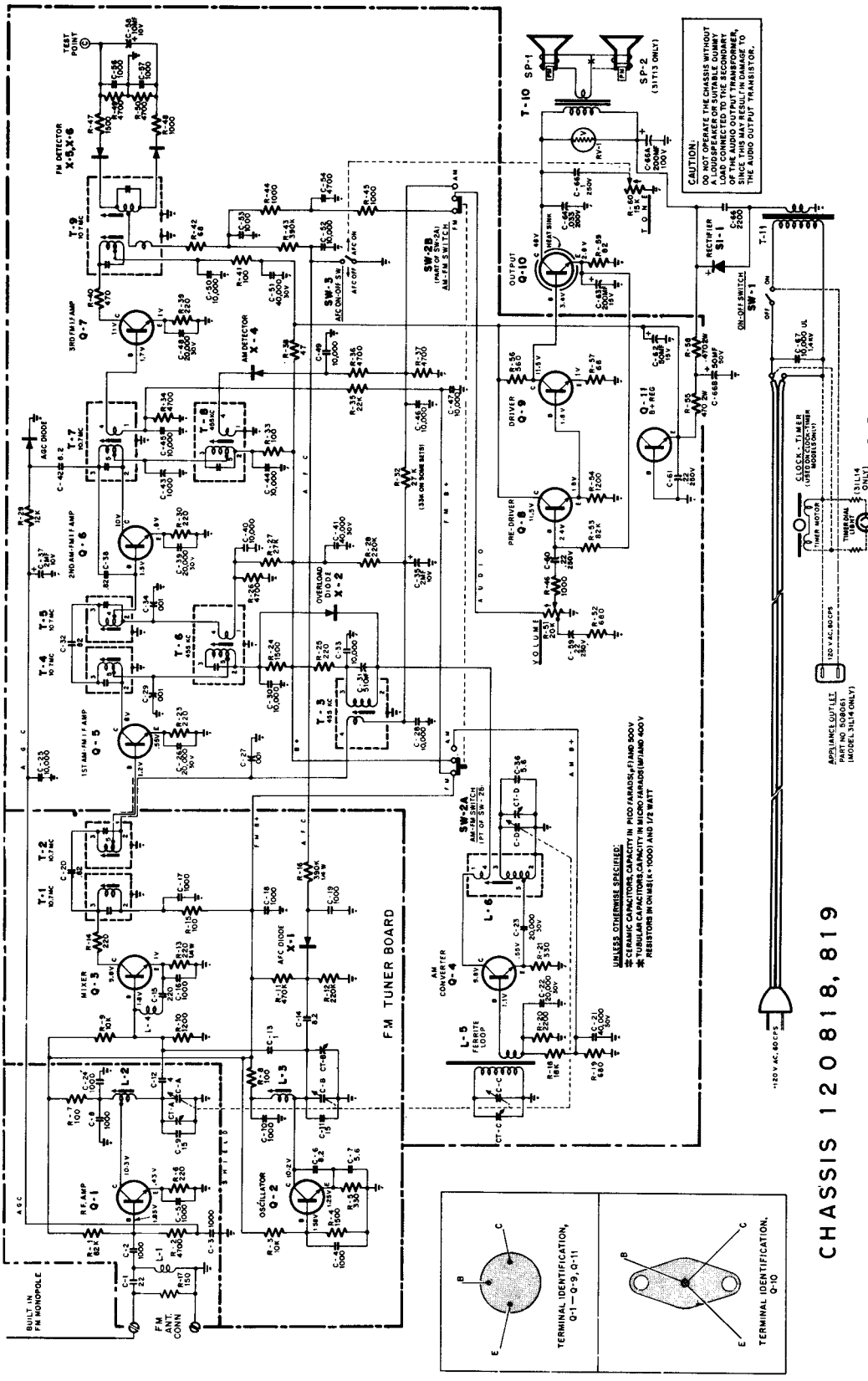


## SERVICING OF ETCHED CIRCUIT BOARDS

When servicing etched circuit boards, it is recommended that a low-wattage soldering iron (approximately 20 to 30 watts) be utilized. Under no circumstances should an excessive amount of heat be applied to the etched foil, since this will result in the etched wiring becoming unbonded from the circuit board. Broken foil leads, if encountered, may be repaired by soldering a piece of stiff hook-up wire across the break. When soldering, a small stiff-bristled brush should be used to wipe away melted solder before it has a chance to accummulate or drip into adjacent wiring or components.

## CONDITIONS FOR MEASUREMENT OF VOLTAGE READINGS INDICATED ON SCHEMATIC DIAGRAM

1) Voltage measurements are positive DC, taken between points indicated and common terminal of electrolytic capacitor C-66.
2) Volume control set for minimum volume and tuning capacitor fully open with no signal applied.
3) Measurements taken with SW-2 in following positions: Q-1, 2, 3, 7 (FM) Q-4 (AM) Q-5, 6, 8, 9, 10, 11 (AM or FM)

# Emerson Radio

| MODEL | CHASSIS |
|---|---|
| 31L15 | 120797 |
| 31L17 | 120798 |
| 31T15 | 120795 |
| 31T17 | 120796 |

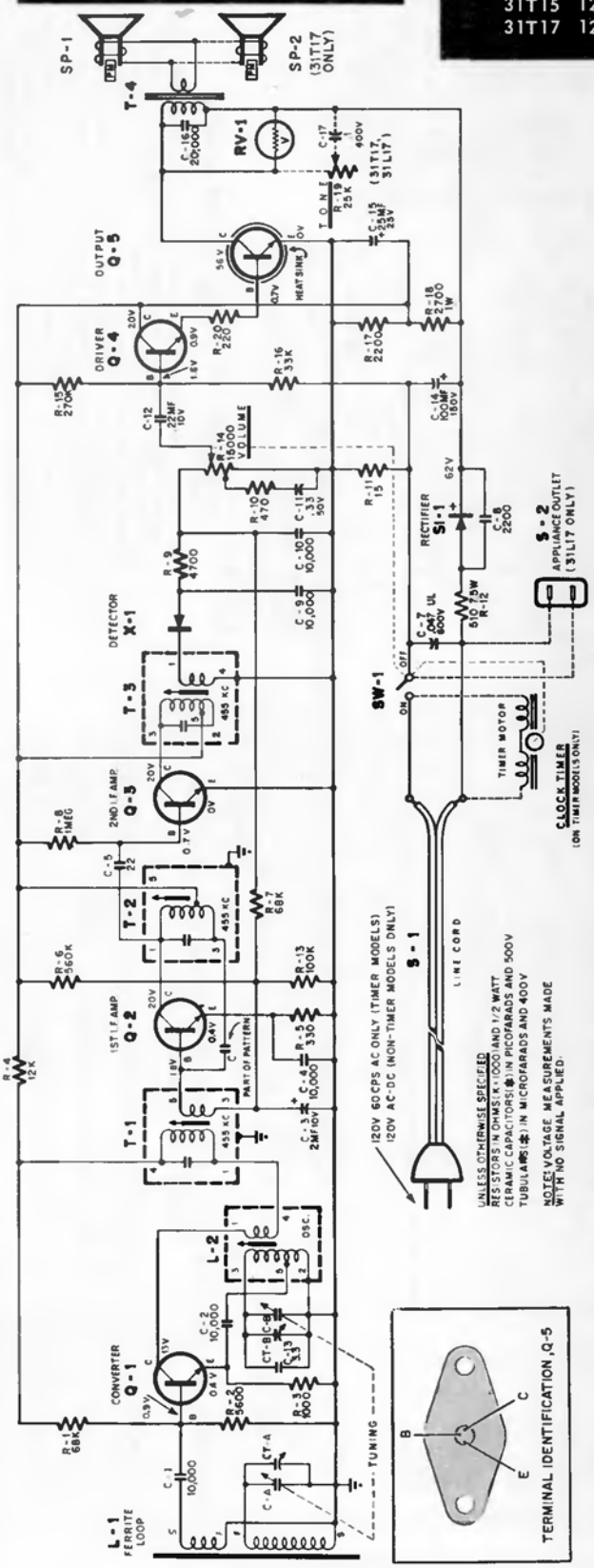


CH.120795,796,797,798

## ALIGNMENT INSTRUCTIONS

| STEP | SIGNAL GENERATOR COUPLING | SIGNAL GENERATOR FREQUENCY | RADIO DIAL SETTING | OUTPUT METER | ADJUST. |
|---|---|---|---|---|---|
| 1 | Form loop of several turns and radiate signal into receiver. | 455 KC | Variable condenser fully open. | Across voice coil. | T-3 T-2 T-1 |
| 2 | As above | 600 KC | 600 KC | As above | L-2 |
| 3 | As above | 1638 KC | Variable condenser fully open. | As above | Trimmer CT-B (Osc.) |
| 4 | As above | 1420 KC | Tune for maximum output. | As above | Trimmer CT-A (Ant.) |

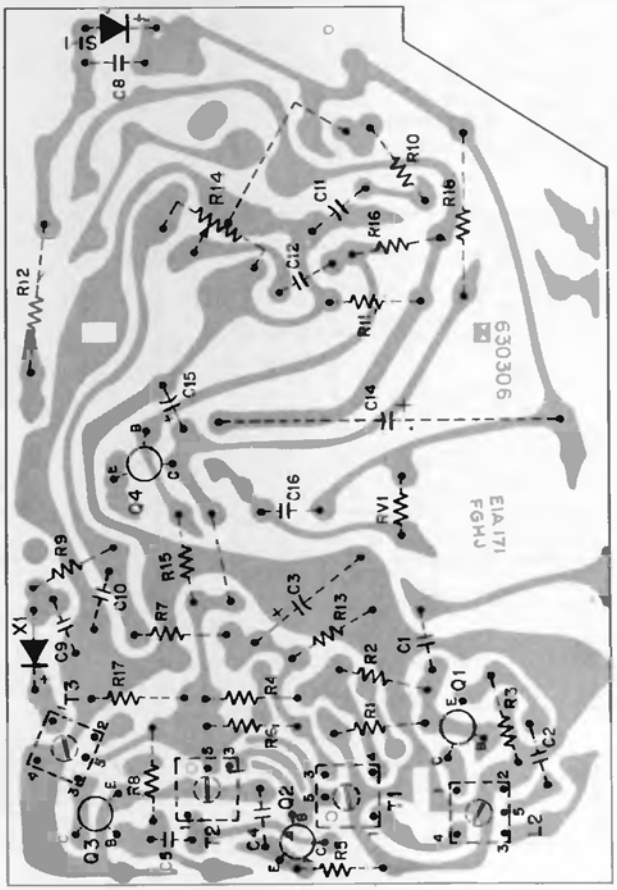


ETCHED CIRCUIT BOARD (BOTTOM VIEW)

32P06, 32P07
CH. 120815
32P06A, 32P07A
CH. 120832

# Emerson Radio

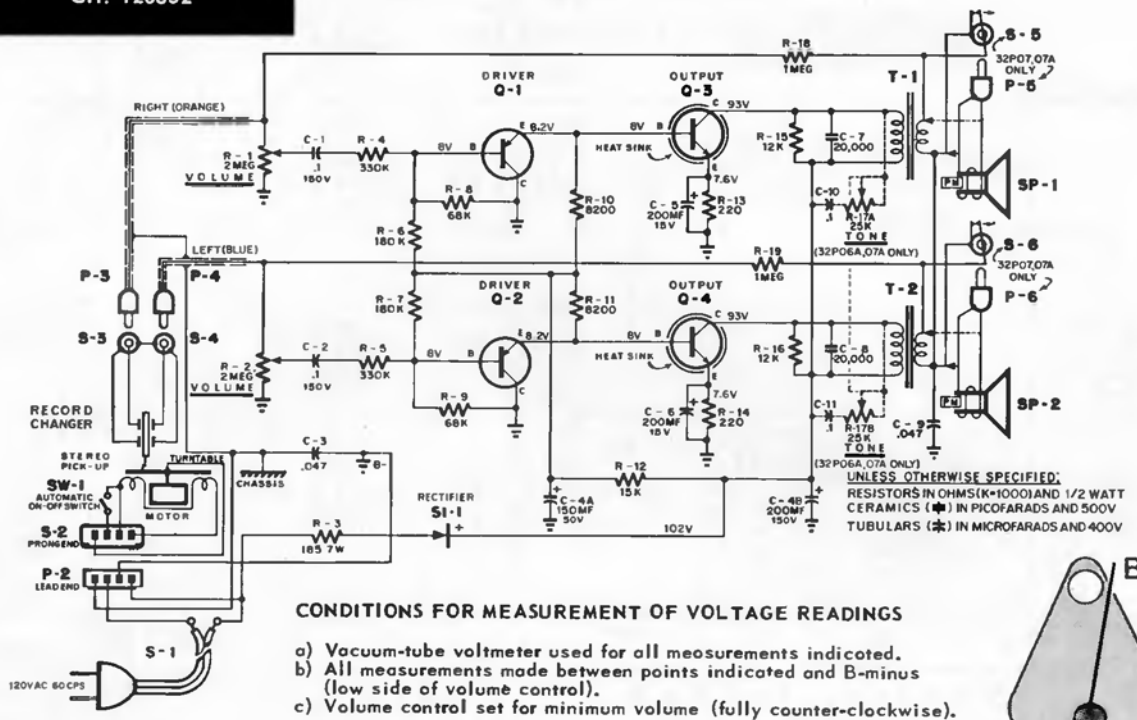


**CONDITIONS FOR MEASUREMENT OF VOLTAGE READINGS**

a) Vacuum-tube voltmeter used for all measurements indicated.
b) All measurements made between points indicated and B-minus (low side of volume control).
c) Volume control set for minimum volume (fully counter-clockwise).

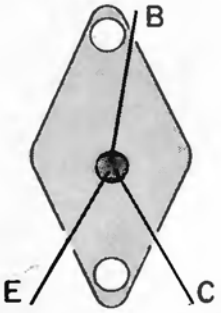


TERMINAL IDENTIFICATION - Q,3, Q-4

**TRANSISTOR REPLACEMENT INFORMATION**

| CHASSIS PRODUCTION | RESISTANCE VALUES EMPLOYED | | | USE ONLY THE FOLLOWING REPLACEMENTS | |
|---|---|---|---|---|---|
| | R-4,5 | R-8,9 | R-15,16 | Q-1,2 | Q-3,4 |
| GROUP A | 330 K | 68 K | 12 K | 815181-B | 815180-3 OR -4 |
| GROUP B | 220 K | 82 K | 8.2 K | 815181-D | 815180-7 |

MODEL : 32P01A
MODEL : 32P12
CHASSIS: 120833

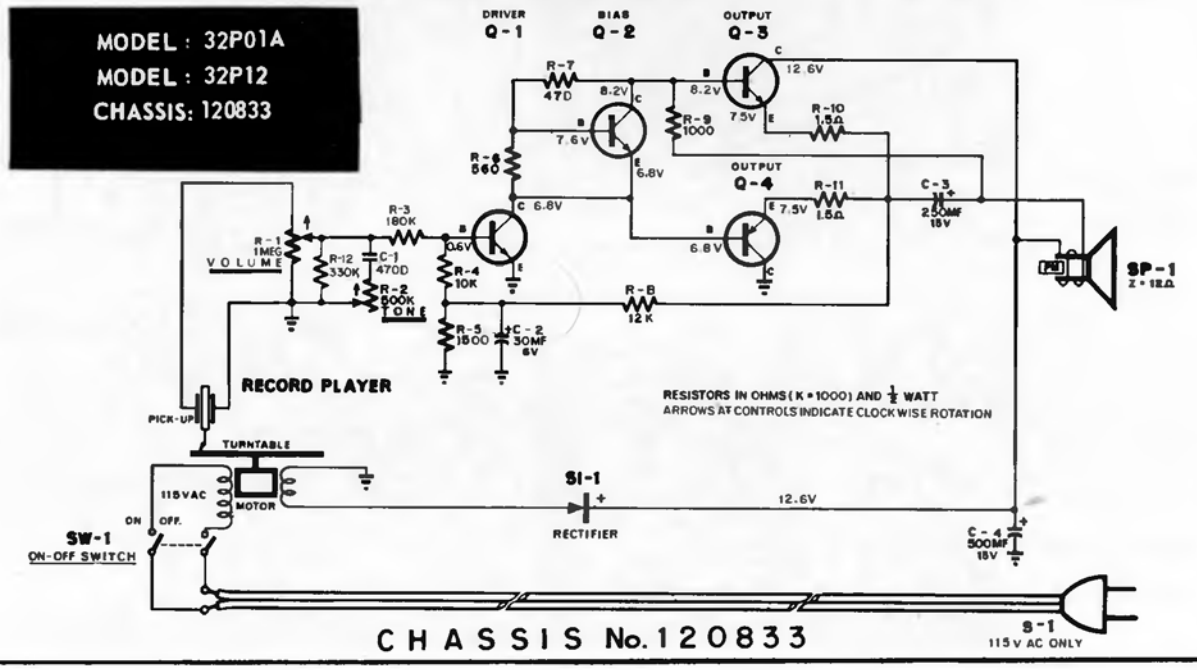


CHASSIS No. 120833

## EMERSON Chassis 120836, Models 32P09, 32P10, 32P11

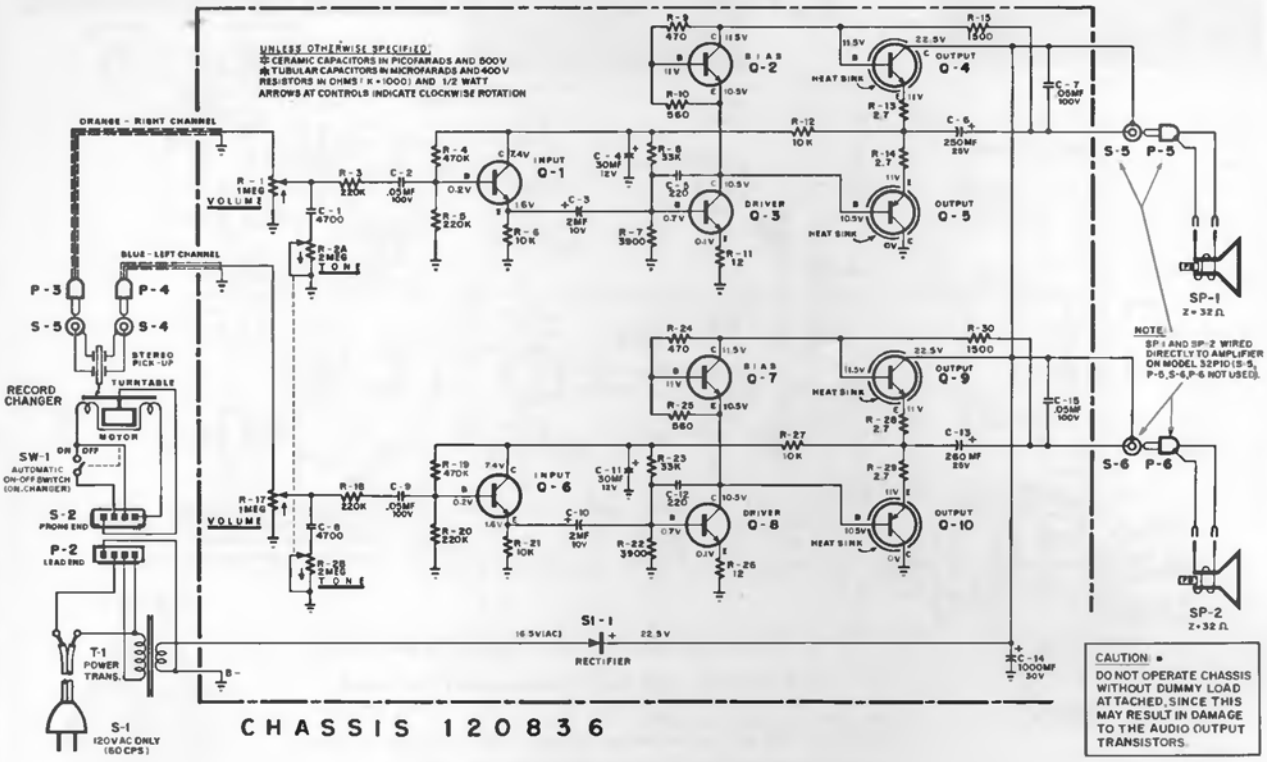


### CONDITIONS FOR VOLTAGE MEASUREMENTS

Voltage readings shown on the schematic diagram are positive DC, measured using a VTVM between the points indicated and chassis ground. All measurements were made with controls set fully counter-clockwise, and line voltage maintained at 120 volts, 60 cps AC. Allow ± 10% variation in readings obtained to compensate for normal component tolerances.

ETCHED CIRCUIT BOARD (Top View)

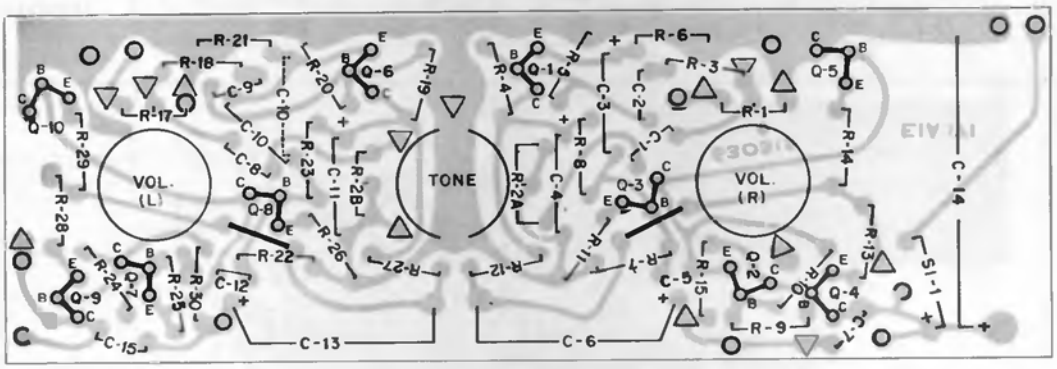


ETCHED CIRCUIT BOARD (Bottom View)

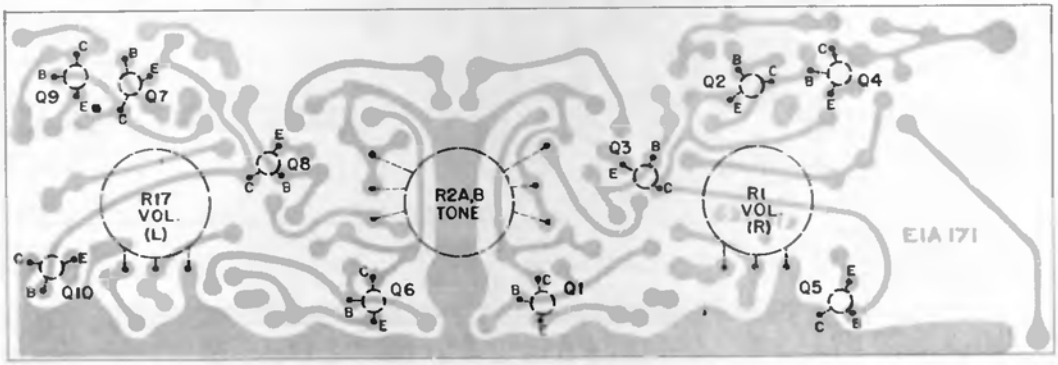

# GENERAL ELECTRIC

Model P891A

SCHEMATIC WIRING DIAGRAM FOR RADIO MODEL P891

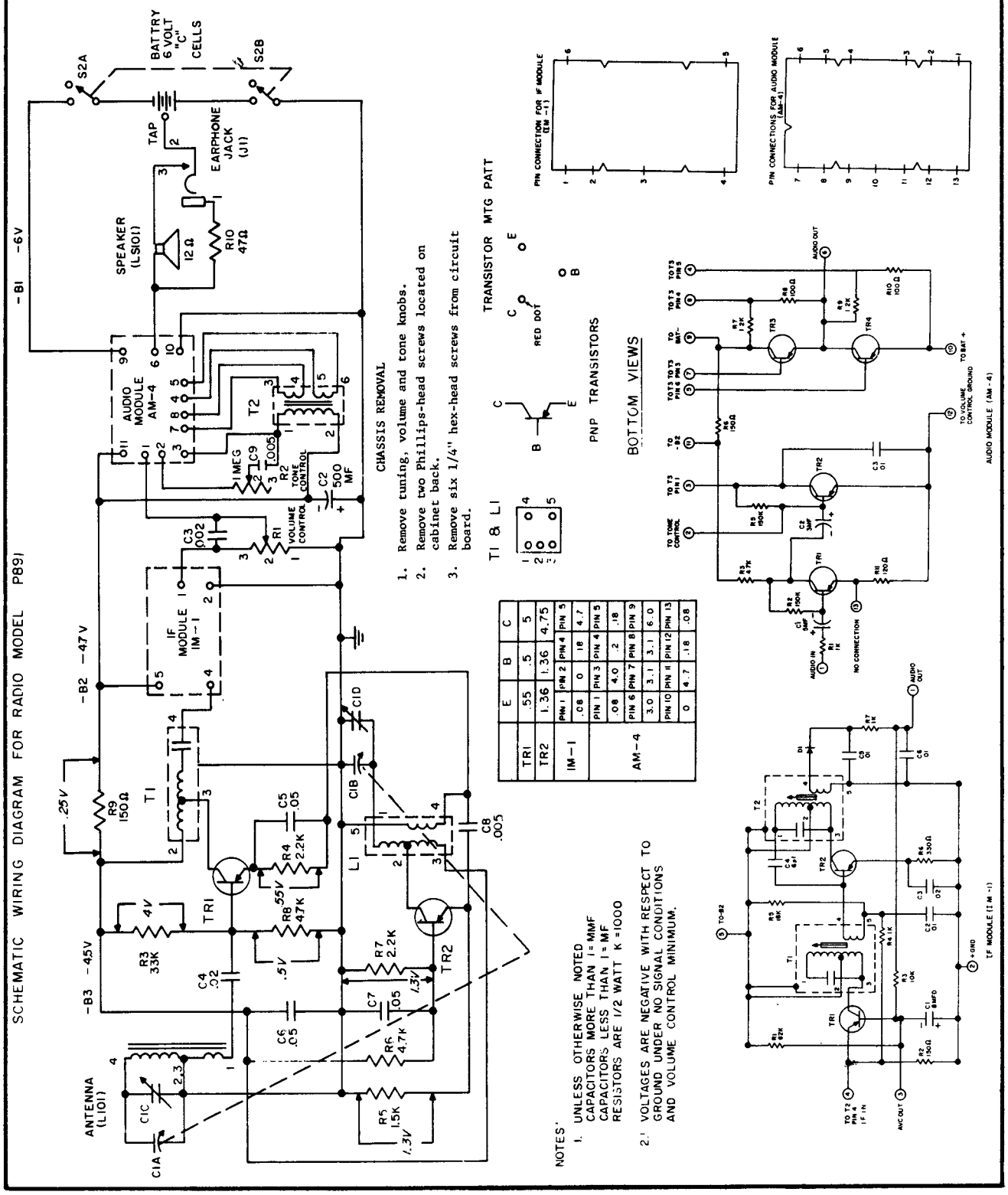


| | E | B | C |
|---|---|---|---|
| TR1 | .55 | .5 | 5 |
| TR2 | 1.36 | 1.36 | 4.75 |
| IM-1 | PIN 1 .08 | PIN 2 0 | PIN 4 .18 | PIN 5 4.7 |
| AM-4 | PIN 1 .08 | PIN 3 4.0 | PIN 4 .2 | PIN 5 .18 |
| | PIN 6 3.0 | PIN 7 3.1 | PIN 8 3.1 | PIN 9 6.0 |
| | PIN 10 0 | PIN 11 4.7 | PIN 12 .18 | PIN 13 .08 |

NOTES:

1. UNLESS OTHERWISE NOTED CAPACITORS MORE THAN 1 = MMF CAPACITORS LESS THAN 1 = MF RESISTORS ARE 1/2 WATT K=1000
2. VOLTAGES ARE NEGATIVE WITH RESPECT TO GROUND UNDER NO SIGNAL CONDITIONS AND VOLUME CONTROL MINIMUM.

## GENERAL ELECTRIC Model P780H

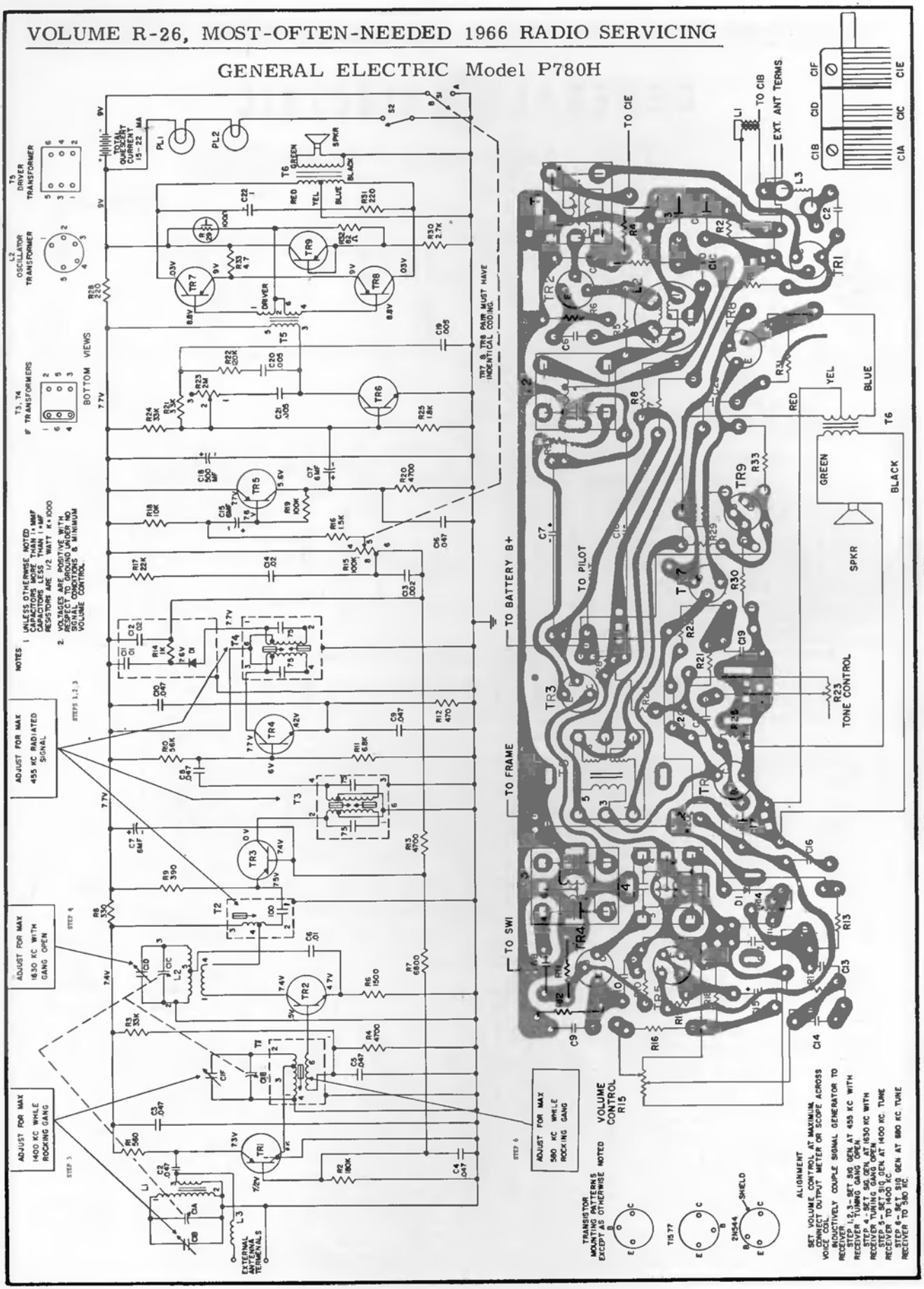


MODEL P780H WIRING DIAGRAM - BOTTOM VIEW

## GENERAL ELECTRIC

### Models P740A, P741A, P915E, P916E, P917E, P9151E, P9161E, P9171E

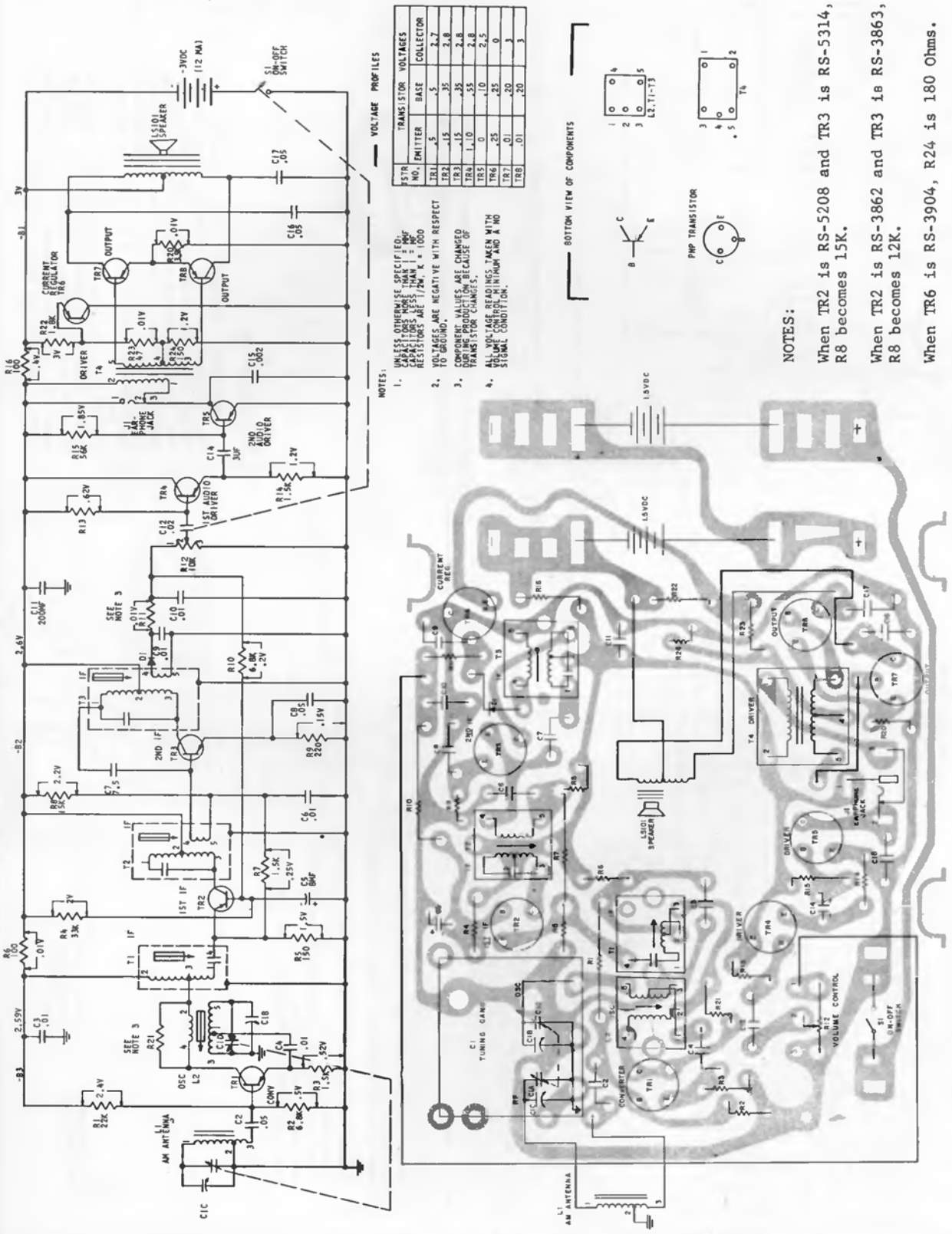


NOTES:

When TR2 is RS-5208 and TR3 is RS-5314, R4 becomes 47K, R8 becomes 15K.

When TR2 is RS-3862 and TR3 is RS-3863, R4 becomes 33K, R8 becomes 12K.

When TR6 is RS-3904, R24 is 180 Ohms.

When TR6 is RS-3948 or RS-3949, R24 is 270 Ohms.

COMPONENT WIRING DIAGRAM (BOTTOM VIEW) FOR RADIO MODELS P915E AND P916E

# GENERAL ELECTRIC

## Model P955E

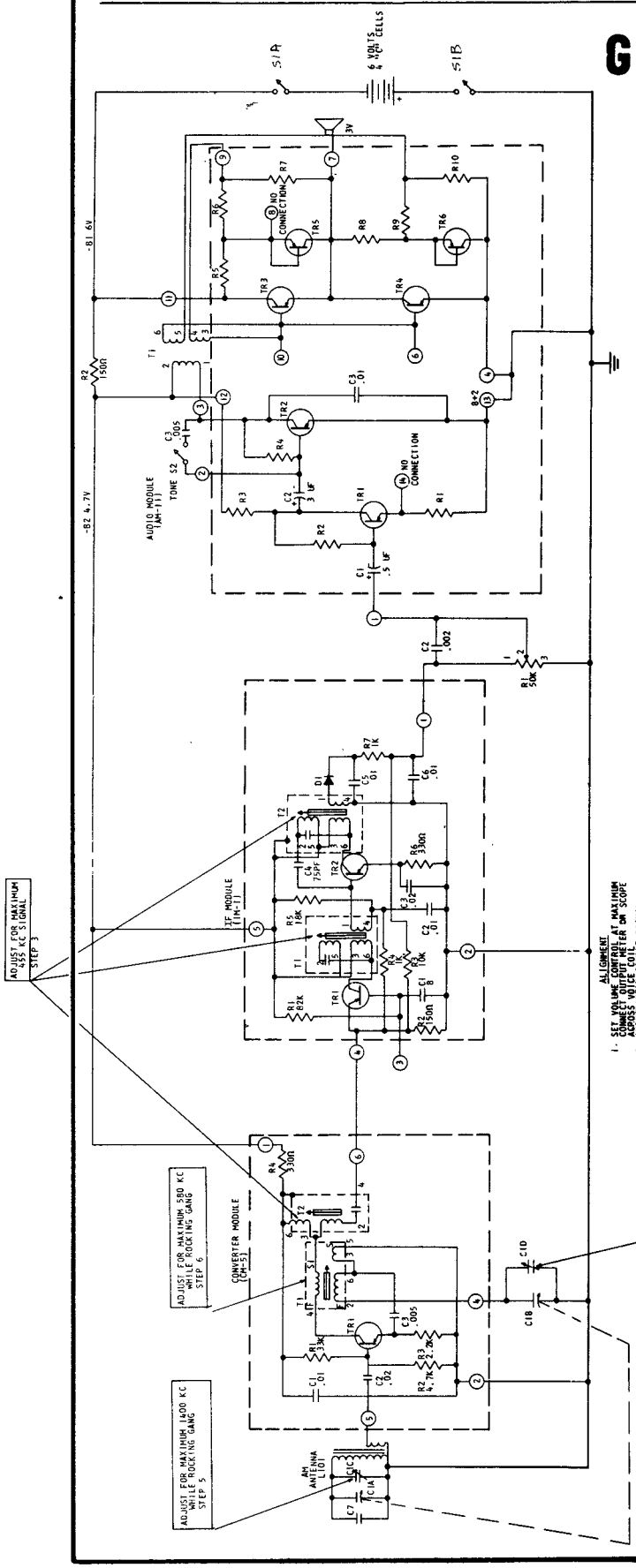


| | | | | | |
|---|---|---|---|---|---|
| CM-1 | PIN 1 | PIN 2 | PIN 6 | | |
| | 4.7 | 0 | .2 | | |
| IM-1 | PIN 1 | PIN 2 | PIN 4 | PIN 5 | |
| | .1 | 0 | .2 | 4.7 | |
| AM-11 | PIN 1 | PIN 2 | PIN 3 | PIN 4 | |
| | 0 | .18 | 4.6 | 0 | |
| | PIN 5 | PIN 6 | PIN 7 | PIN 8 | |
| | .185 | .185 | 3 | 3.1 | |
| | PIN 9 | PIN 10 | PIN 11 | PIN 12 | |
| | 3.1 | 3.1 | 6 | 4.7 | |
| | PIN 13 | PIN 14 | | | |
| | 0 | .07 | | | |

1. VOLTAGES ARE NEGATIVE WITH RESPECT TO GROUND UNDER NO SIGNAL CONDITIONS AND VOLUME CONTROL MAXIMUM.
2. UNLESS OTHERWISE NOTED: CAPACITORS LESS THAN 1 = MFD CAPACITORS LESS THAN 1 = MMF RESISTORS ARE 1/2 WATT, 5 %, 1000 OHMS AND LESS, 10 % OVER 1000 OHMS.
3. SHOWN ARE A POSSIBLE COMBINATION BECAUSE OF THE WIDE VARIATION IN BETA, THESE VOLTAGES WILL VARY IF COMPONENTS ARE FREQUENTLY CHANGED.

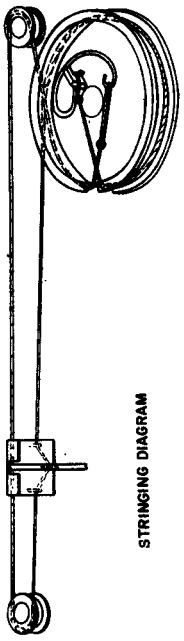

STRINGING DIAGRAM

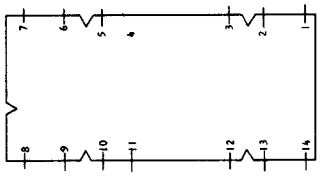

PIN CONNECTIONS FOR AUDIO MODULE (AM-11) (VIEWED FROM COMPONENT SIDE)

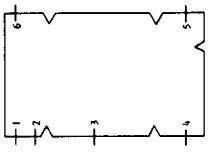

PIN CONNECTIONS FOR TF MODULE (IM-1) (VIEWED FROM COMPONENT SIDE)

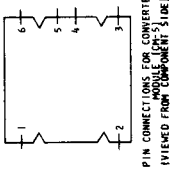

PIN CONNECTIONS FOR CONVERTER MODULE (CM-5) (VIEWED FROM COMPONENT SIDE)

### CHASSIS REMOVAL

1. Remove volume and tuning knobs.
2. Remove two Phillips-head screws from cabinet back.
3. Remove seven hex-head screws from circuit board.
4. Remove one hex-head screw inside battery compartment.
5. Label and unsolder wires going to speaker and battery terminals.
6. Carefully lift circuit board from cabinet.

### TROUBLESHOOTING

IMPORTANT: The audio output terminals of the radio must be D.C. isolated from ground during servicing procedures. This is to prevent the audio output transistors from becoming damaged by excess voltages in the audio circuit. Therefore, care must be exercised in using test equipment that may cause a D.C. path to ground.

Use of a VOM creates no particular problem as the meter is isolated from ground. If a VTVM is used, a 100 MFD., 200 volt electrolytic capacitor must be inserted in the negative probe to isolate the VTVM.

## GENERAL ELECTRIC Models C1410A, C1411A, C1412A

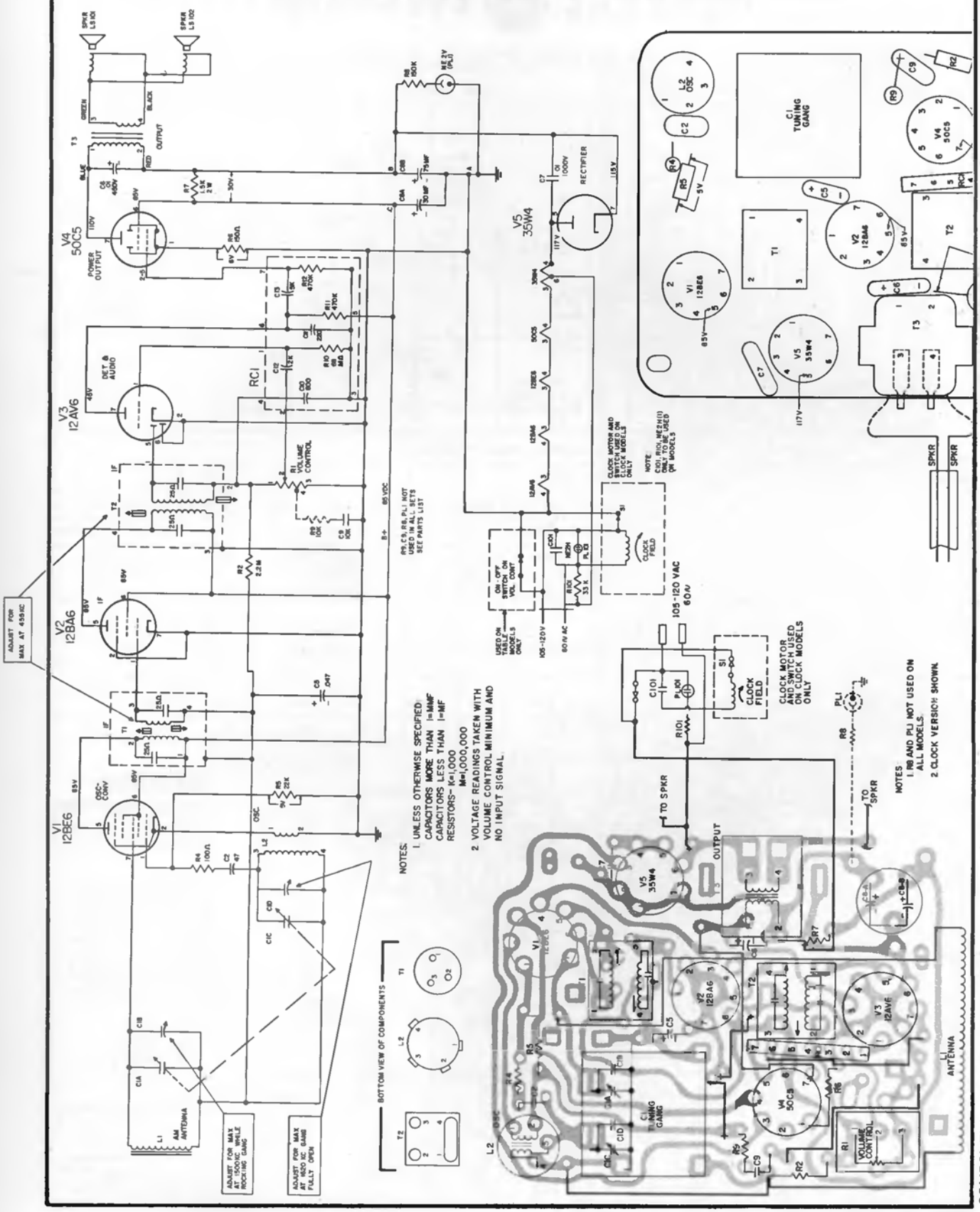

# GENERAL ELECTRIC

## Models P1700A, P1701A, P1704A

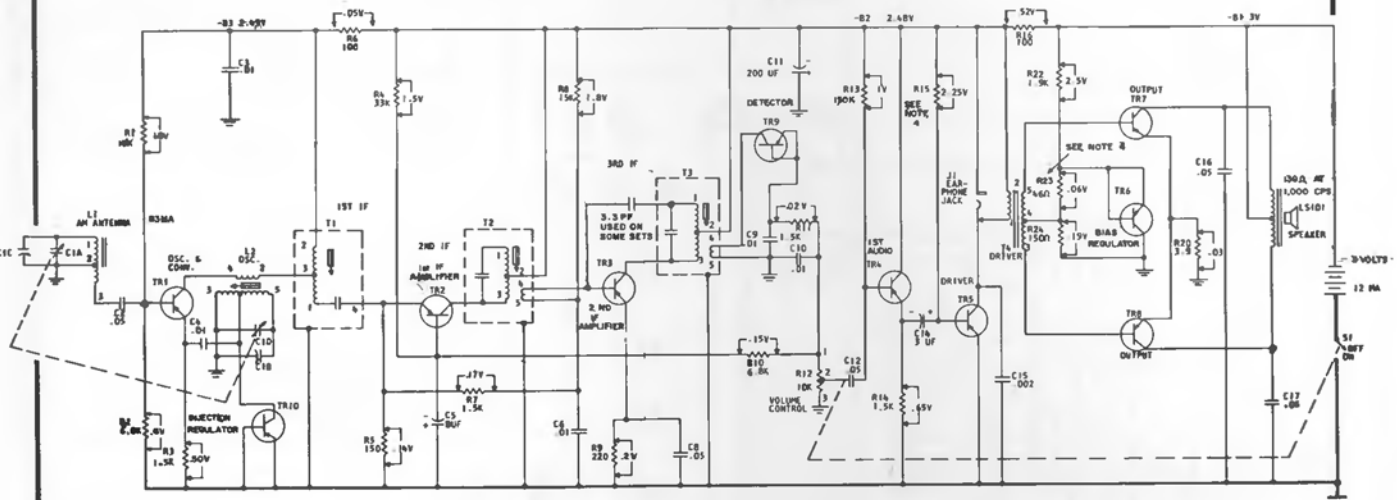


COMPONENT SUBSTITUTION CHART

| GROUP | 1 | 2 | 3 | 4 | 5 | 6 | 7 | 8 | 9 | 10 | 11 | 12 | 13 | 14 |
|---|---|---|---|---|---|---|---|---|---|---|---|---|---|---|
| TR5 | RS-5551 | RS-5551 | RS-5551 | RS-5552 | RS-5552 | RS-5552 | RS-5552 | RS-5553 | RS-5553 | RS-5553 | RS-5553 | RS-5553 | RS-5554 | RS-5554 |
| TR7,8 | RS-5757 | RS-5758 | RS-5759 | RS-5756 | RS-5757 | RS-5758 | RS-5759 | RS-5755 | RS-5756 | RS-5757 | RS-5758 | RS-5759 | RS-5755 | RS-5756 |
| R15 | 150K | 150K | 150K | 180K | 180K | 180K | 180K | 220K | 220K | 220K | 220K | 220K | 270K | 270K |
| R23 | 39 | 47 | 50 | 22 | 39 | 47 | 56 | 22 | 22 | 39 | 47 | 56 | 22 | 22 |

| GROUP CONT'D. | 15 | 16 | 17 | 18 | 19 | 20 | 21 | 22 | 23 | 24 | 25 | 26 | 27 |
|---|---|---|---|---|---|---|---|---|---|---|---|---|---|
| TR5 | RS-5554 | RS-5554 | RS-5554 | RS-5555 | RS-5555 | RS-5555 | RS-5555 | RS-5556 | RS-5556 | RS-5556 | RS-5557 | RS-5557 | RS-5557 |
| TR7,8 | RS-5757 | RS-5758 | RS-5759 | RS-5755 | RS-5756 | RS-5757 | RS-5758 | RS-5754 | RS-5755 | RS-5756 | RS-5754 | RS-5755 | RS-5756 |
| R15 | 270K | 270K | 270K | 330K | 330K | 330K | 330K | 330K | 330K | 330K | 390K | 390K | 390K |
| R23 | 39 | 47 | 56 | 22 | 22 | 39 | 47 | 22 | 22 | 22 | 22 | 22 | 22 |

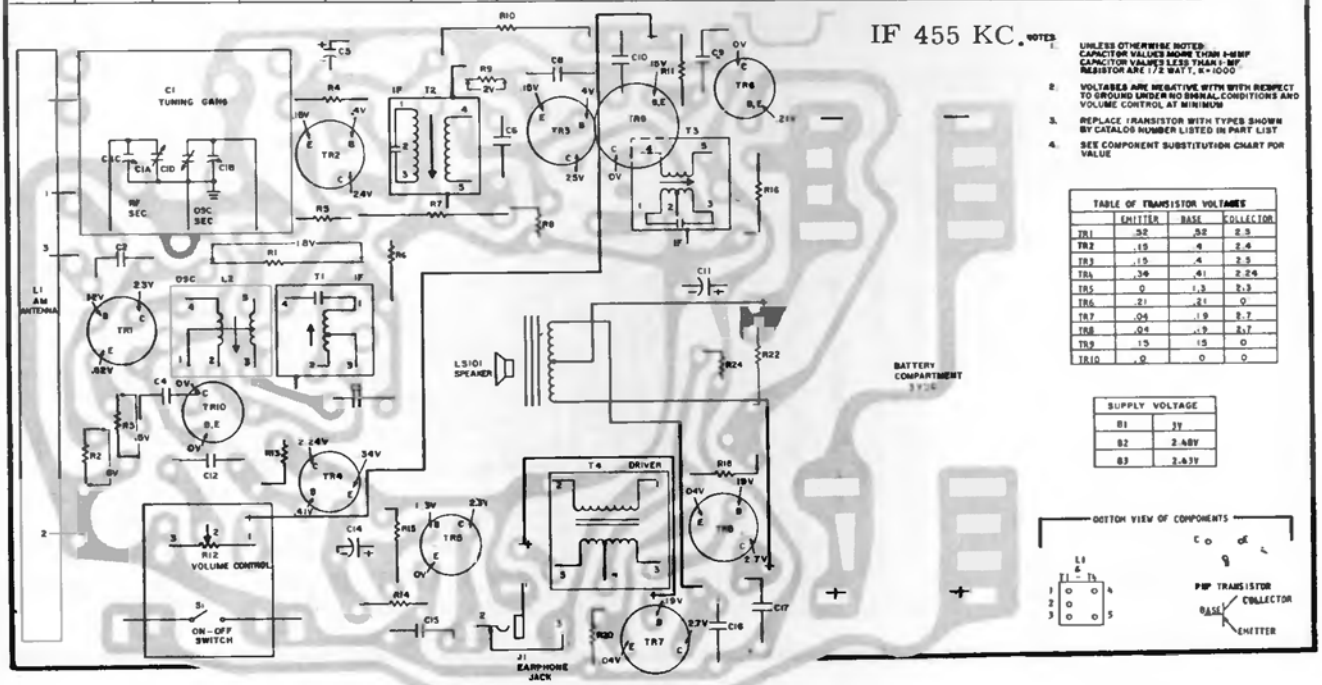

**GENERAL ELECTRIC**

TU50 FM-AM Tuner
(Diagram and data on next two pages)

(TU500 series type tuner is practically to TU50, but has mechanical housing and flywheel tuning.)

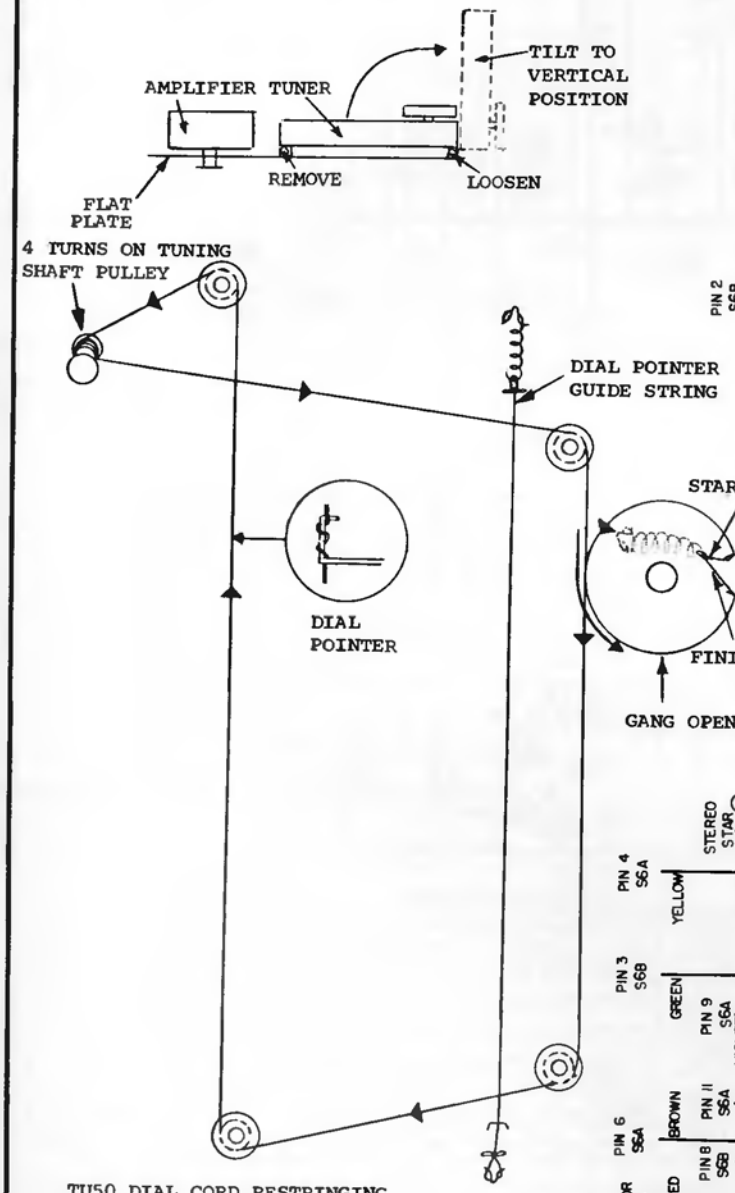


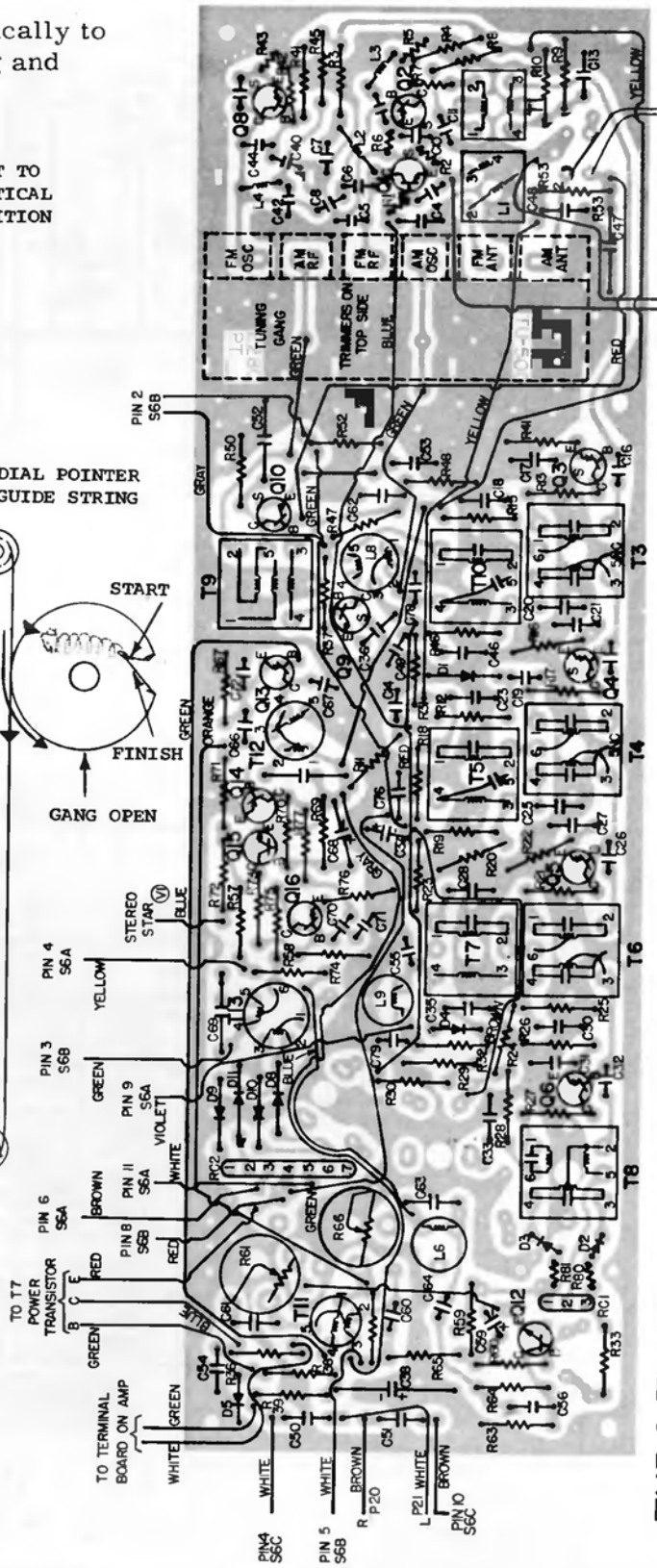


TU50 TUNER COMPONENT LAYOUT BOTTOM VIEW

TU50 DIAL CORD RESTRINGING

1. Place gang to open position.
2. Hook on end of spring on gang drum and bring dial cord around drum and under tuner chassis.
3. Remove the two screws nearest the audio amplifier that hold the tuner to the flat plate. Loosen the other two tuner screws.
4. Tilt the tuner up to a vertical position. (See sketch.)
5. Follow the diagram for restringing the dial cord.

## GENERAL ELECTRIC TU50 Tuner Schematic Diagram (Continued)

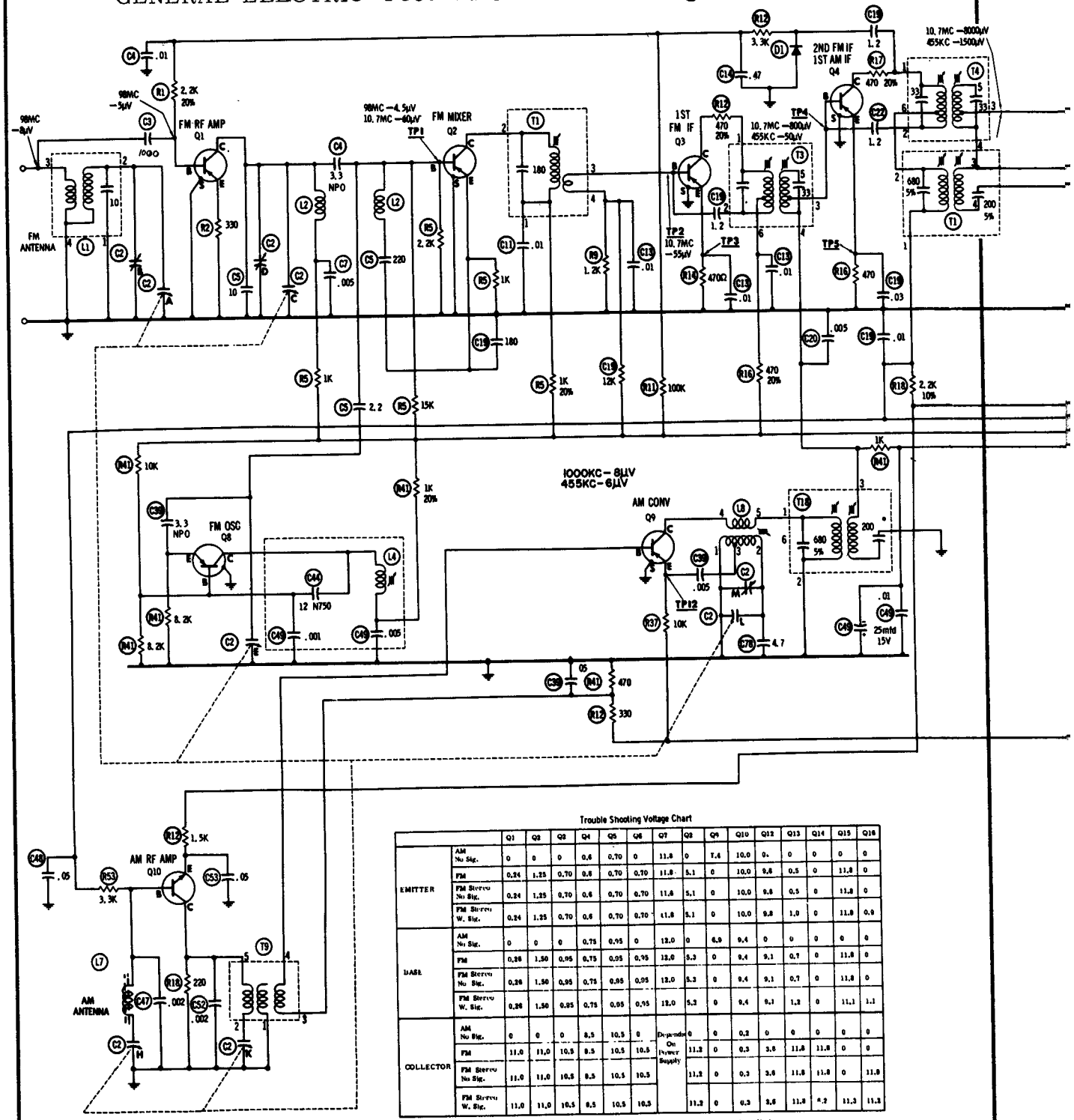


### Trouble Shooting Voltage Chart

| | | Q1 | Q2 | Q3 | Q4 | Q5 | Q6 | Q7 | Q8 | Q9 | Q10 | Q12 | Q13 | Q14 | Q15 | Q16 |
|---|---|---|---|---|---|---|---|---|---|---|---|---|---|---|---|---|
| EMITTER | AM No Sig. | 0 | 0 | 0 | 0.6 | 0.70 | 0 | 11.8 | 0 | 7.4 | 10.0 | 9. | 0 | 0 | 0 | 0 |
| | FM | 0.24 | 1.25 | 0.70 | 0.6 | 0.70 | 0.70 | 11.8 | 5.1 | 0 | 10.0 | 9.8 | 0.5 | 0 | 11.8 | 0 |
| | FM Stereo No Sig. | 0.24 | 1.25 | 0.70 | 0.6 | 0.70 | 0.70 | 11.8 | 5.1 | 0 | 10.0 | 9.8 | 0.5 | 0 | 11.8 | 0 |
| | FM Stereo W. Sig. | 0.24 | 1.25 | 0.70 | 0.6 | 0.70 | 0.70 | 11.8 | 5.1 | 0 | 10.0 | 9.8 | 1.0 | 0 | 11.8 | 0.9 |
| BASE | AM No Sig. | 0 | 0 | 0 | 0.75 | 0.95 | 0 | 12.0 | 0 | 6.9 | 9.4 | 0 | 0 | 0 | 0 | 0 |
| | FM | 0.26 | 1.50 | 0.95 | 0.75 | 0.95 | 0.95 | 12.0 | 5.3 | 0 | 9.4 | 9.1 | 0.7 | 0 | 11.8 | 0 |
| | FM Stereo No Sig. | 0.26 | 1.50 | 0.95 | 0.75 | 0.95 | 0.95 | 12.0 | 5.3 | 0 | 9.4 | 9.1 | 0.7 | 0 | 11.8 | 0 |
| | FM Stereo W. Sig. | 0.26 | 1.50 | 0.95 | 0.75 | 0.95 | 0.95 | 12.0 | 5.3 | 0 | 9.4 | 9.1 | 1.2 | 0 | 11.1 | 1.1 |
| COLLECTOR | AM No Sig. | 0 | 0 | 0 | 8.5 | 10.5 | 0 | Depends On Power Supply | 0 | 0 | 0.2 | 0 | 0 | 0 | 0 | 0 |
| | FM | 11.0 | 11.0 | 10.5 | 8.5 | 10.5 | 10.5 | | 11.2 | 0 | 0.3 | 3.6 | 11.8 | 11.8 | 0 | 0 |
| | FM Stereo No Sig. | 11.0 | 11.0 | 10.5 | 8.5 | 10.5 | 10.5 | | 11.2 | 0 | 0.3 | 3.6 | 11.8 | 11.8 | 0 | 11.8 |
| | FM Stereo W. Sig. | 11.0 | 11.0 | 10.5 | 8.5 | 10.5 | 10.5 | | 11.2 | 0 | 0.3 | 3.6 | 11.8 | 4.2 | 11.3 | 11.3 |

All voltages are negative with respect to ground (chassis), with no signal applied, except for measurements in stereo circuits.
Zener diode (D5) voltage is −12 volts, ±5%. Chart is made for 12.0V Zener diode.
Other voltages have a tolerance of ±15%.

### TU50 SWITCHING

| POS. | S2A | S2B |
|---|---|---|
| 1 | ON | OFF |
| 2 | ON | OFF |
| 3 | OFF | ON |
| 4 | OFF | ON |
| 5 | OFF | ON |

TERM. VIEW OF Q2, Q3, Q5, Q4, & Q8

TERM. VIEW OF Q1

TERM. VIEW OF Q4, Q9, Q10, Q12, Q13, Q14, & Q15 Q16

TERM. VIEW OF Q7

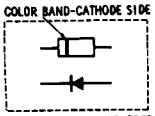


THIS APPLIES TO ALL DIODES

GENERAL ELECTRIC

TU50 Tuner (Continued)

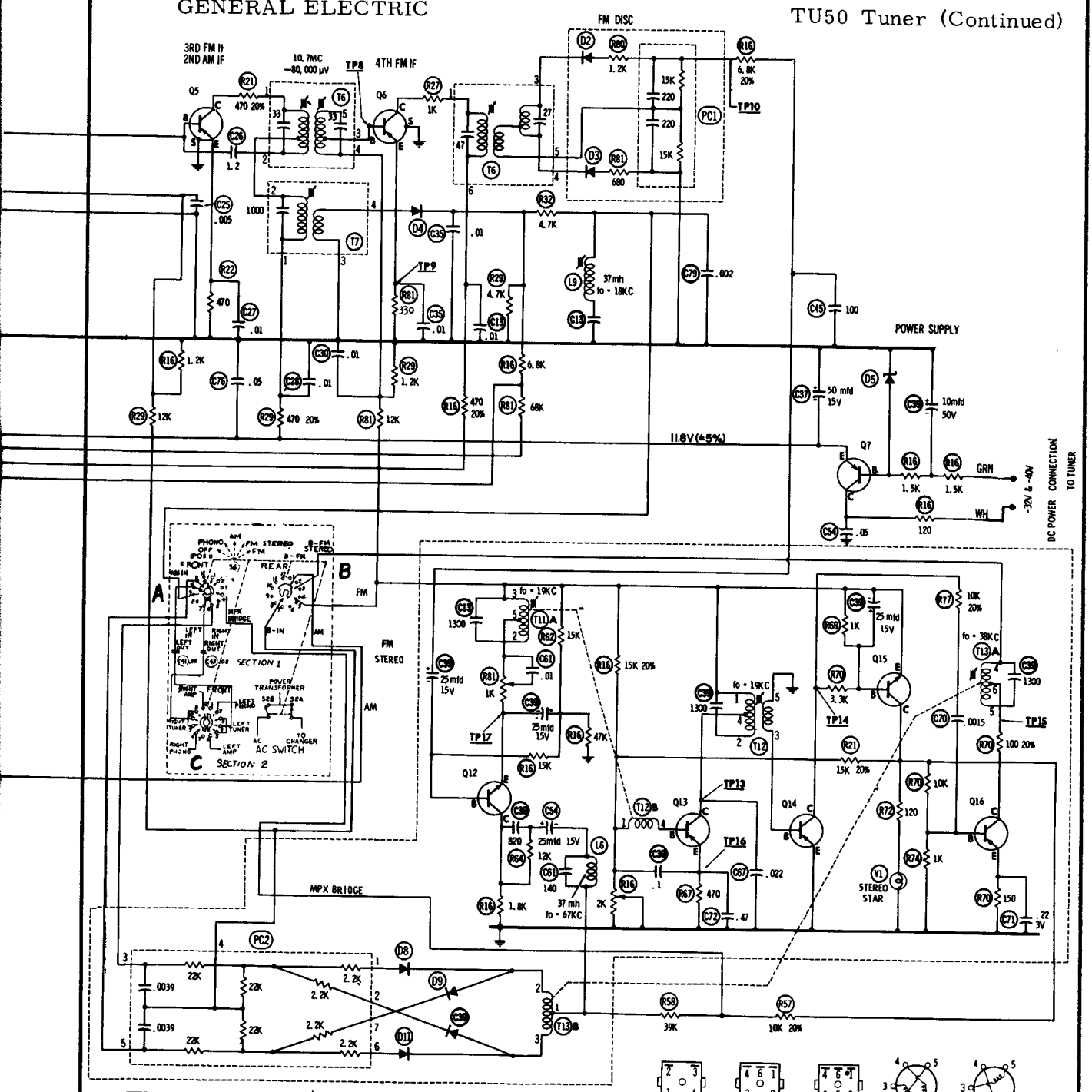


# TU50 SCHEMATIC DIAGRAM

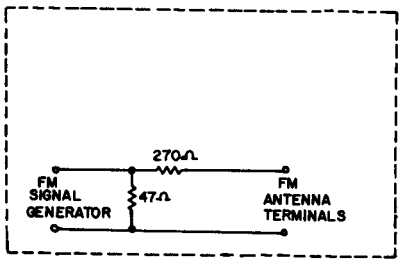


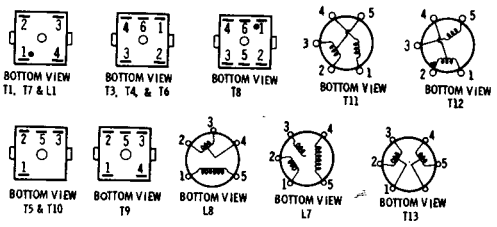


NOTES:

1. Capacitor values more than 1 in mmf; capacitor values less than 1 in mfd, unless otherwise noted.
2. All resistors in ohms, 1/2 watt, 10% tolerance, unless otherwise noted.
3. AM sensitivity is given as the input required to give 30mv audio output. Input = 455kc/1000kc, 30% modulation, 50Ω input impedance.
4. FM sensitivity is given as the input required to give an audio output that is 3db below maximum output. Input = 10.7mc/98mc, 22.5kc deviation, 50Ω input impedance, except 300Ω at antenna terminals.

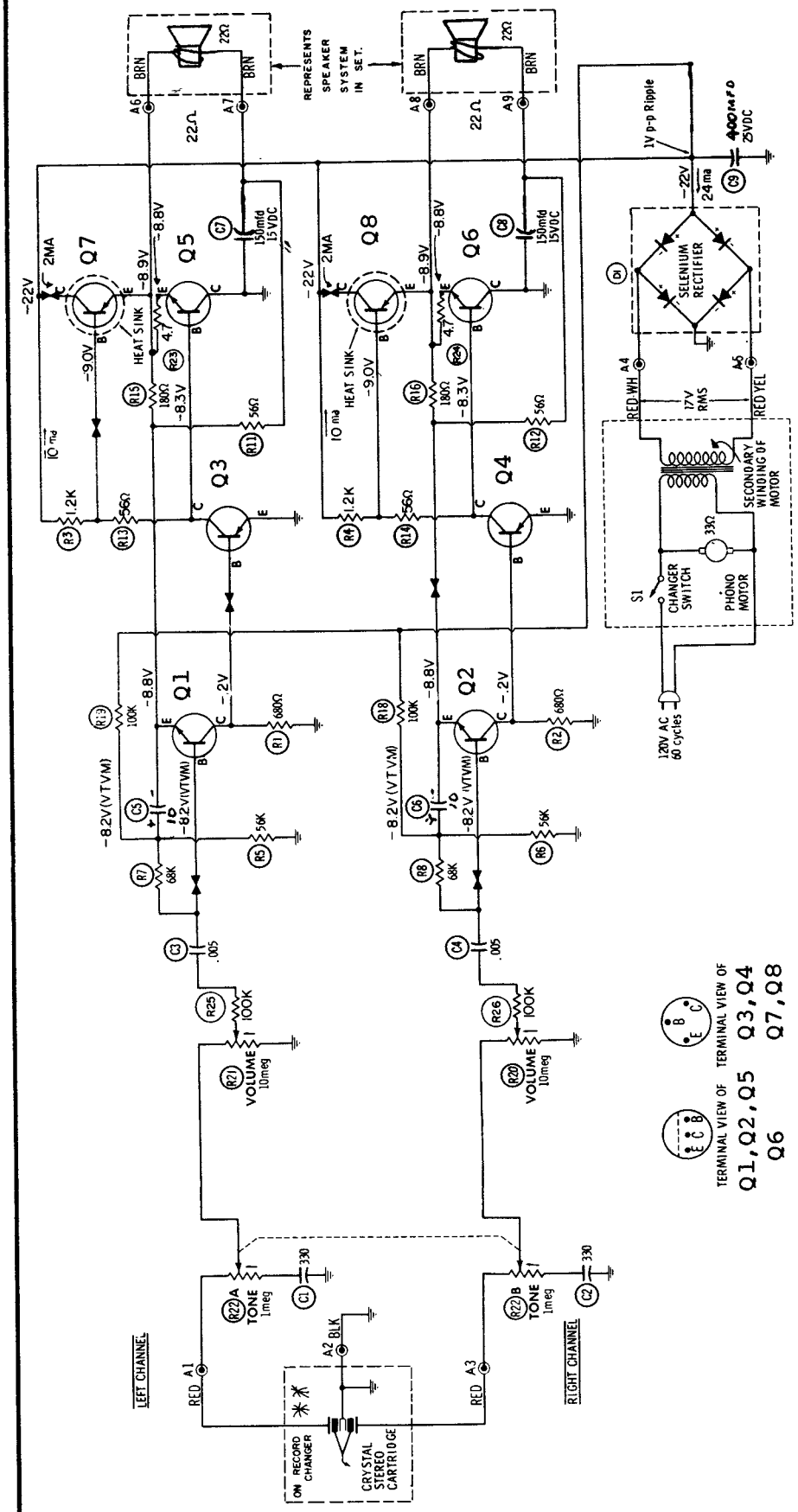


Unless Otherwise Noted:
All voltages shown are typical voltages with no signal applied to circuit.
Measurements shown may deviate ±10%.
A- denotes amp connectors
Resistors shown are 1/2 watt. K= 1000 meg= 1,000,000
Capacitor values less than 1 in mfd; capacitor values more than 1 in mmf
Arrows on controls indicate clockwise rotation.
DC voltages measured from B-(gnd) with 20,000 ohm-per-volt meter.
Line voltage maintained at 120 volts AC, 60 cycles.
▶◀-BOWTIES INDICATE CUT POINTS ON CONDUCTOR PATTERN FOR CIRCUIT TESTING WITH OHMMETER.

GENERAL ELECTRIC

# T2AB

TRANSISTOR AMPLIFIER

# Magnavox

## R252 SERIES RADIO

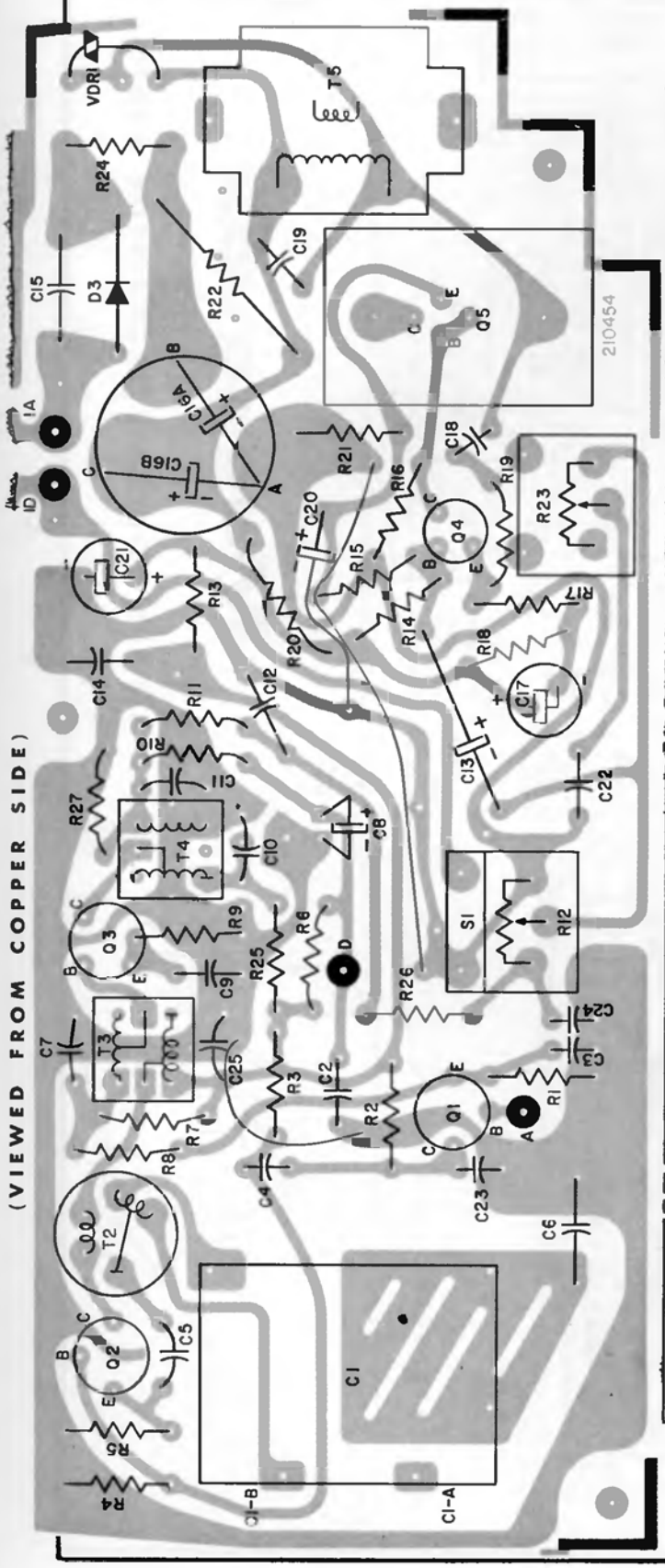


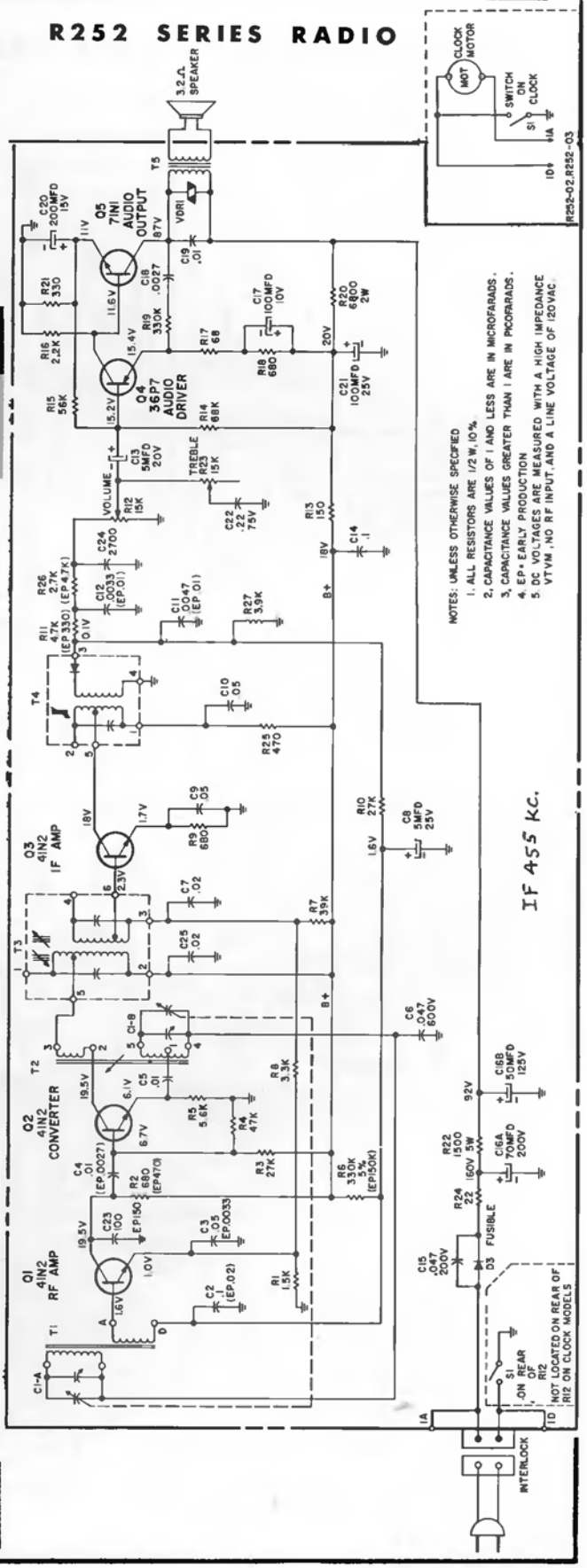


NOTES: UNLESS OTHERWISE SPECIFIED
1. ALL RESISTORS ARE 1/2 W, 10%.
2. CAPACITANCE VALUES OF 1 AND LESS ARE IN MICROFARADS.
3. CAPACITANCE VALUES GREATER THAN 1 ARE IN PICOFARADS.
4. EP = EARLY PRODUCTION
5. DC VOLTAGES ARE MEASURED WITH A HIGH IMPEDANCE VTVM, NO RF INPUT, AND A LINE VOLTAGE OF 120VAC.

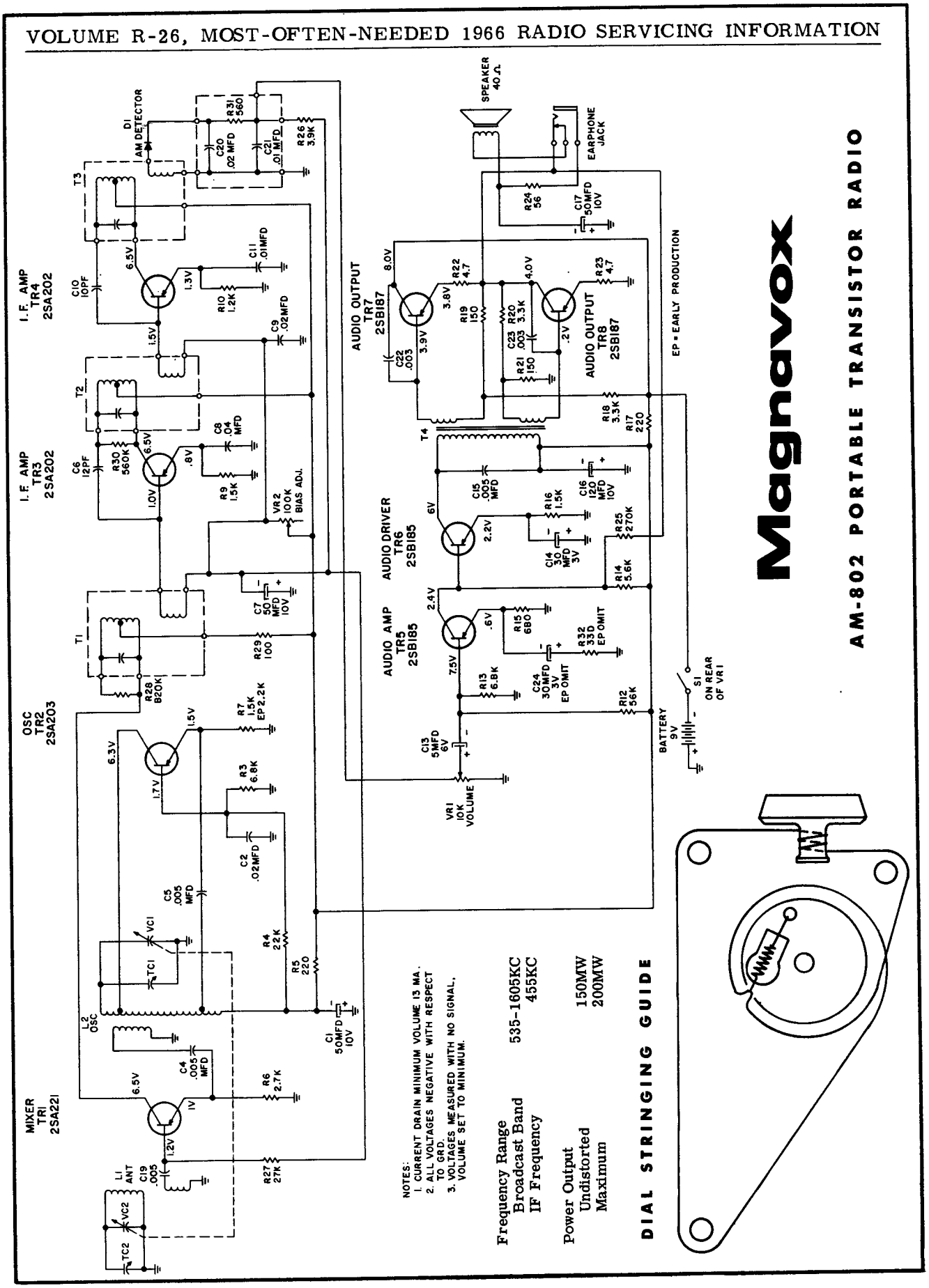
Magnavox
AM-802 PORTABLE TRANSISTOR RADIO
I.F. AMP TR4 2SA202
I.F. AMP TR3 2SA202
OSC TR2 2SA203
MIXER TR1 2SA221
AUDIO OUTPUT TR7 2SB187
AUDIO OUTPUT TR8 2SB187
AUDIO DRIVER TR6 2SB185
AUDIO AMP TR5 2SB185
AM DETECTOR
SPEAKER 40 Ω
EARPHONE JACK
EP = EARLY PRODUCTION
BATTERY 9V
S1 ON REAR OF VR1
VR1 10K VOLUME
VR2 100K BIAS ADJ.
NOTES:
1. CURRENT DRAIN MINIMUM VOLUME 13 MA.
2. ALL VOLTAGES NEGATIVE WITH RESPECT TO GRD.
3. VOLTAGES MEASURED WITH NO SIGNAL, VOLUME SET TO MINIMUM.
Frequency Range
Broadcast Band 535-1605KC
IF Frequency 455KC
Power Output
Undistorted 150MW
Maximum 200MW
DIAL STRINGING GUIDE

# Magnavox A505 SERIES AMPLIFIER CHASSIS

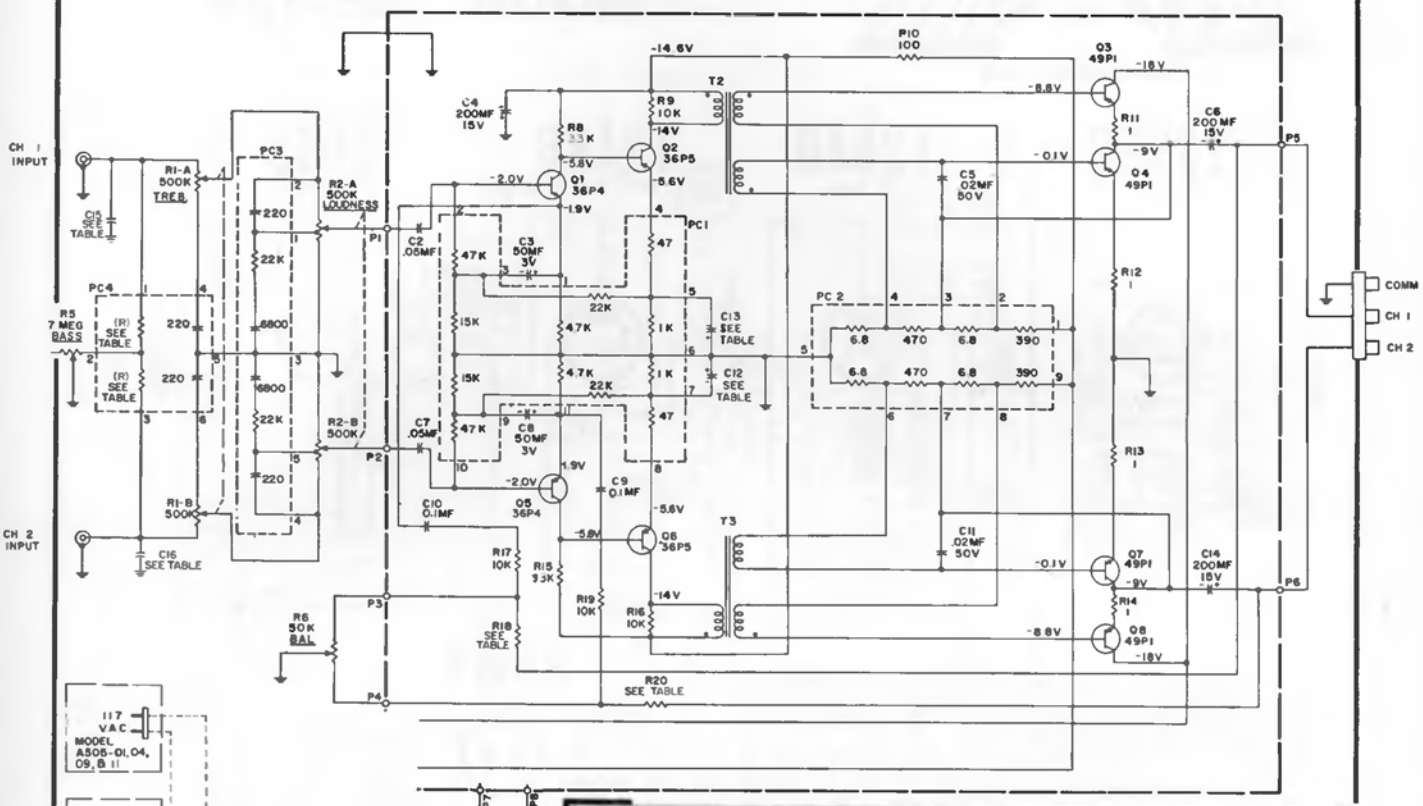


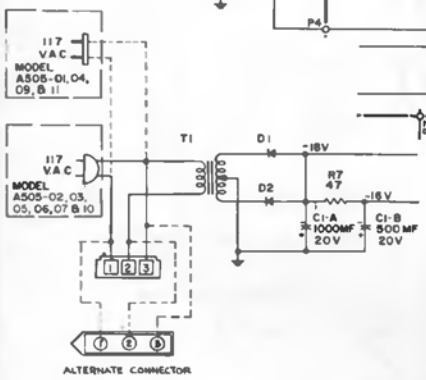


NOTES:
1 VOLTAGES MEASURED WITH VTVM, NO INPUT SIGNAL
2 SOME EARLY CHASSIS HAD 100K RESISTORS AT R18 & R20.

| | | | | | | | |
|---|---|---|---|---|---|---|---|
| A505-11 | 250 MF, 10V | 250 MF, 10V | 100K | 100K | 1000 | 1000 | 180K |
| A505-10 | 250 MF, 10V | 250 MF, 10V | 68K | 68K | OMIT | OMIT | 100K |
| A505-09 | 250 MF, 10V | 250 MF, 10V | 68K | 68K | OMIT | OMIT | 100K |
| A505-07 | 250 MF, 10V | 250 MF, 10V | 68K | 68K | OMIT | OMIT | 100K |
| A505-06 THRU A505-01 | 100MF, 10V | 100 MF, 10V | 68K | 68K | OMIT | OMIT | 100K |
| MODEL | C12 | C13 | R18 | R20 | C15 | C16 | PC4 (R) |

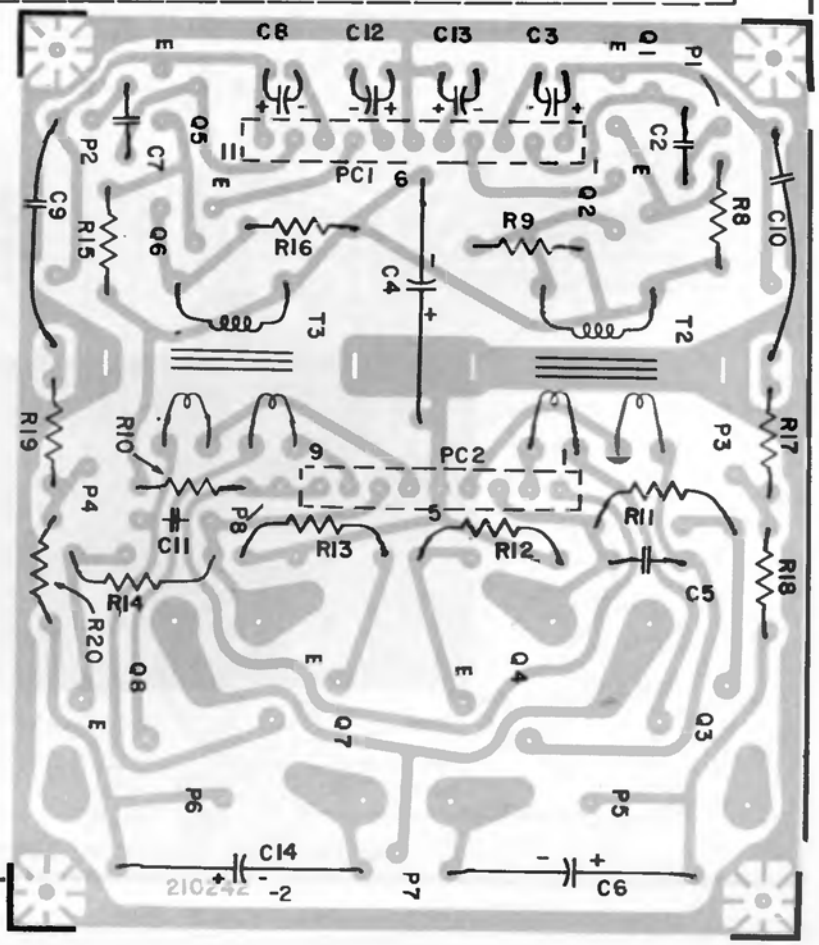

PANASONIC

MATSUSHITA ELECTRIC CORPORATION OF AMERICA

# MODEL RE-124

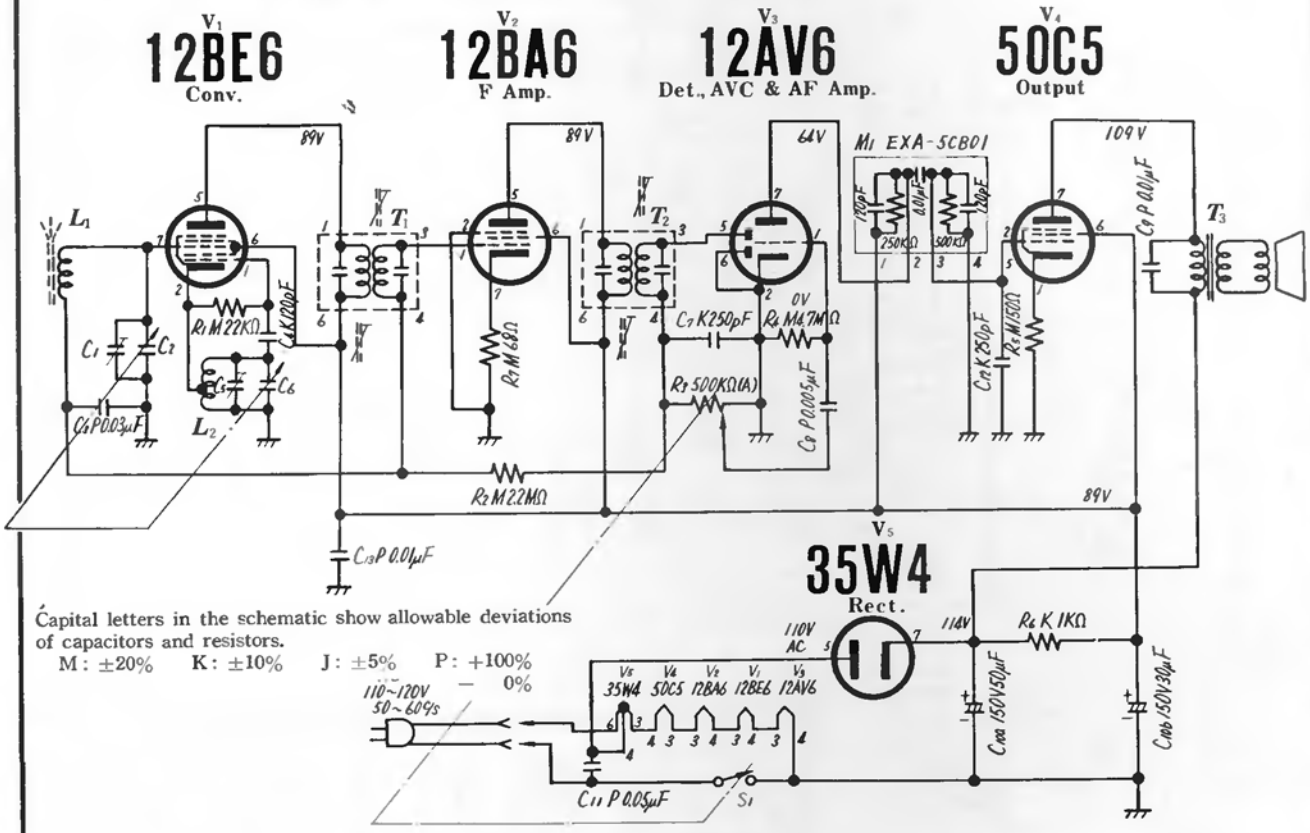


Capital letters in the schematic show allowable deviations of capacitors and resistors.
M: ±20% K: ±10% J: ±5% P: +100% − 0%

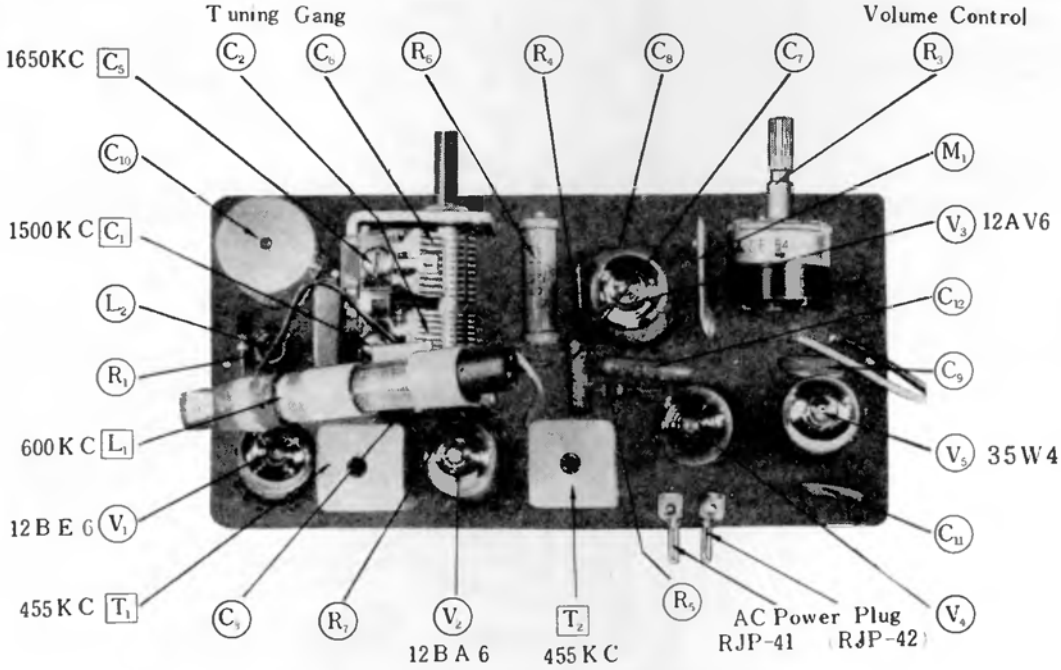


Top View - Parts Identification, Alignment Points.

MONTGOMERY WARD & CO.
Airline Model GEN-1336A

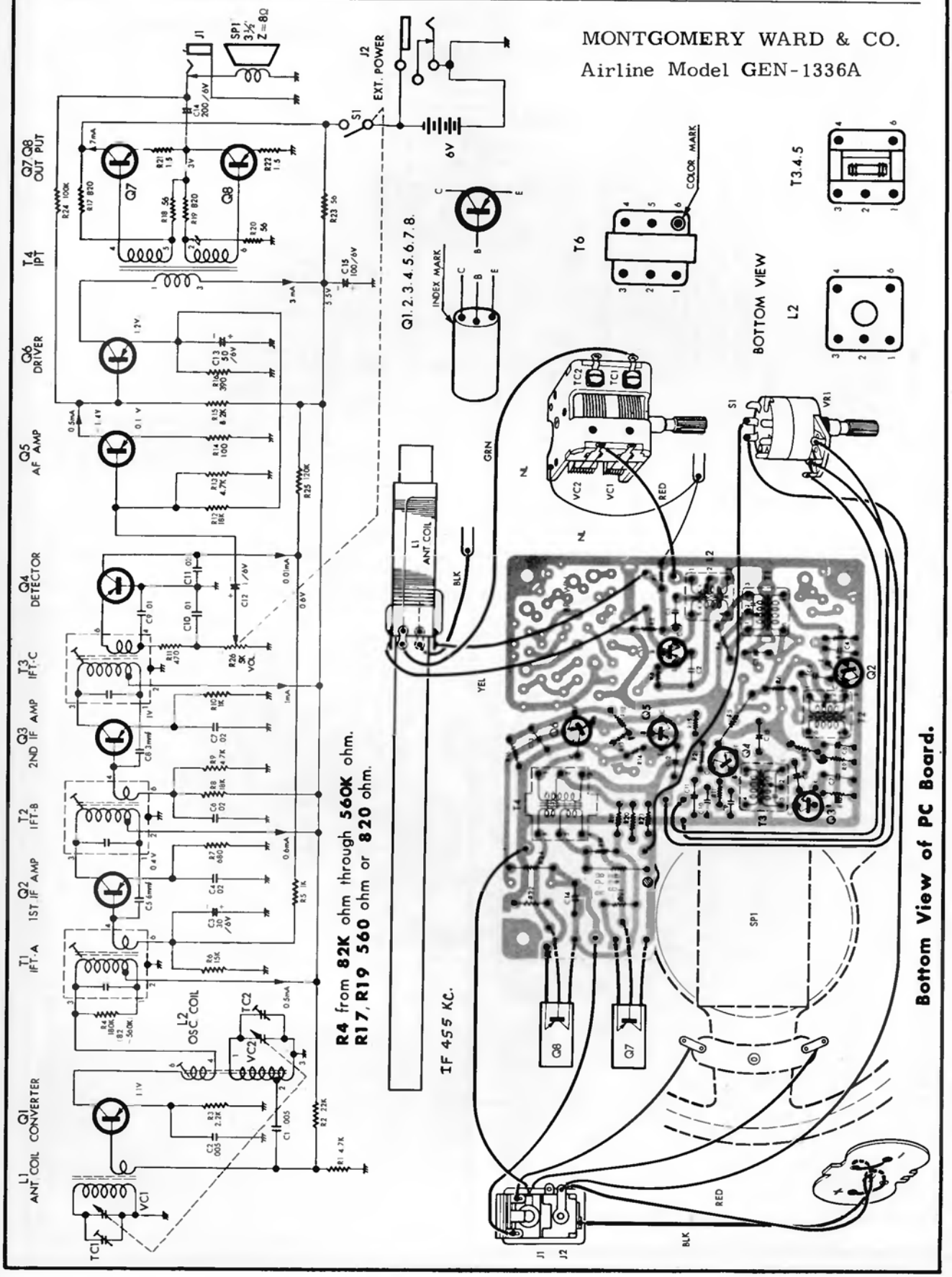

# MONTGOMERY WARD & CO.

## Models GEN-1808A, GEN-1837A, GEN-1847A, GEN-1857A, GEN-1877A, GEN-1897A.

NOTES:

1. ALL CAPACITANCE VALUES ARE IN MICROFARADS +80% -20% 50V MIN. UNLESS OTHERWISE INDICATED.
2. ALL RESISTANCE VALUES ARE IN OHMS, 1/2 W ±10% UNLESS OTHERWISE INDICATED.
3. VOLTAGES SHOWN AT EACH TRANSISTOR ELECTRODE (±20%) MEASURED TO COMMON GROUND WITH A VTVM WITH NO INPUT SIGNAL AND VOLUME CONTROL SET AT MAXIMUM, NEGATIVE GROUNDED.
4. ALL COIL AND TRANSFORMER RESISTANCES ARE MEASURED OUT OF CIRCUIT, RESISTANCES LESS THAN 1 OHM ARE NOT SHOWN.
5. * LIGHTED DIAL ON SOME MODELS ONLY

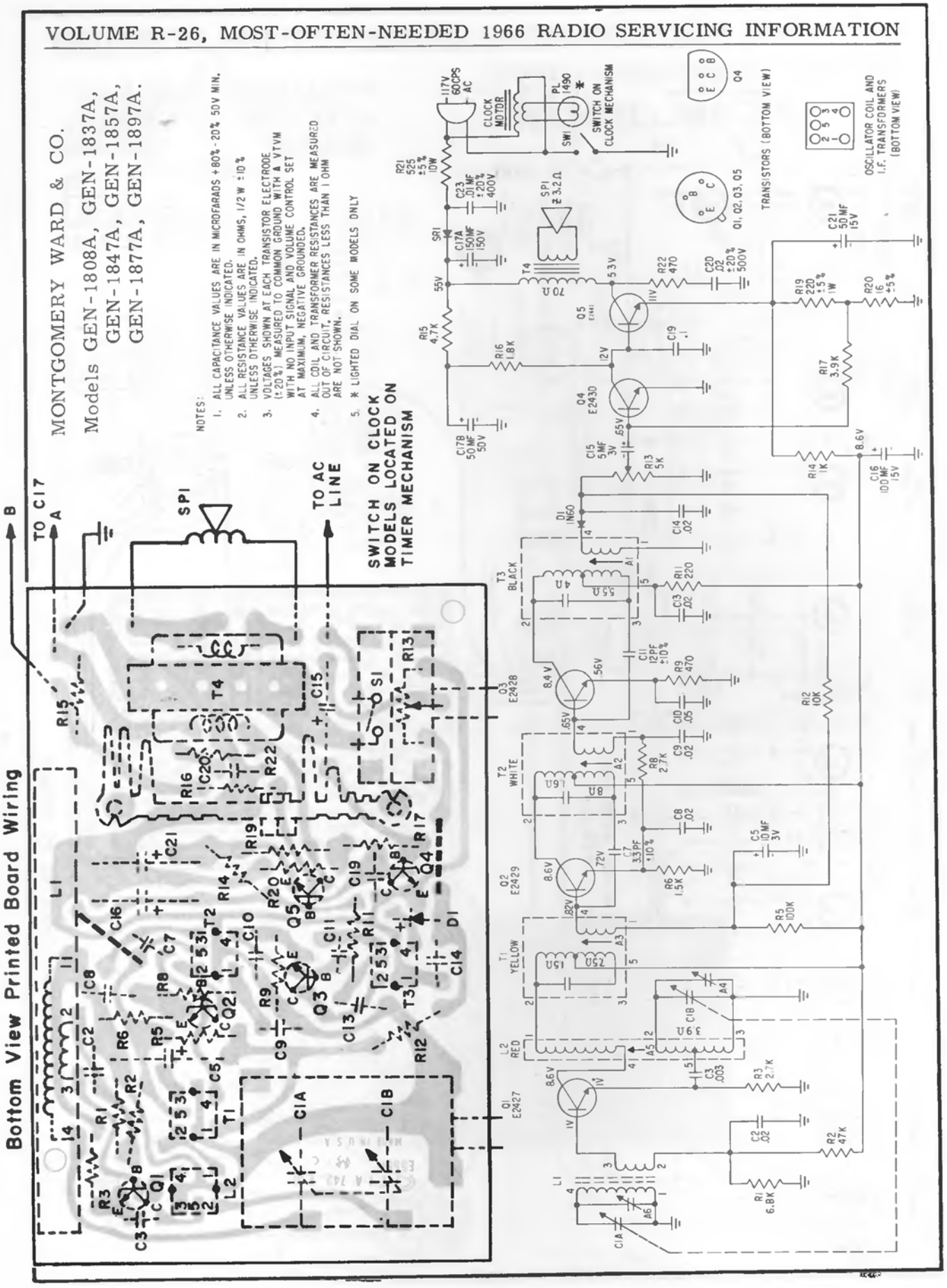

# MOTOROLA

## MODEL AC40A CHASSIS HS-4152 — MODEL AC5B CHASSIS HS-4152

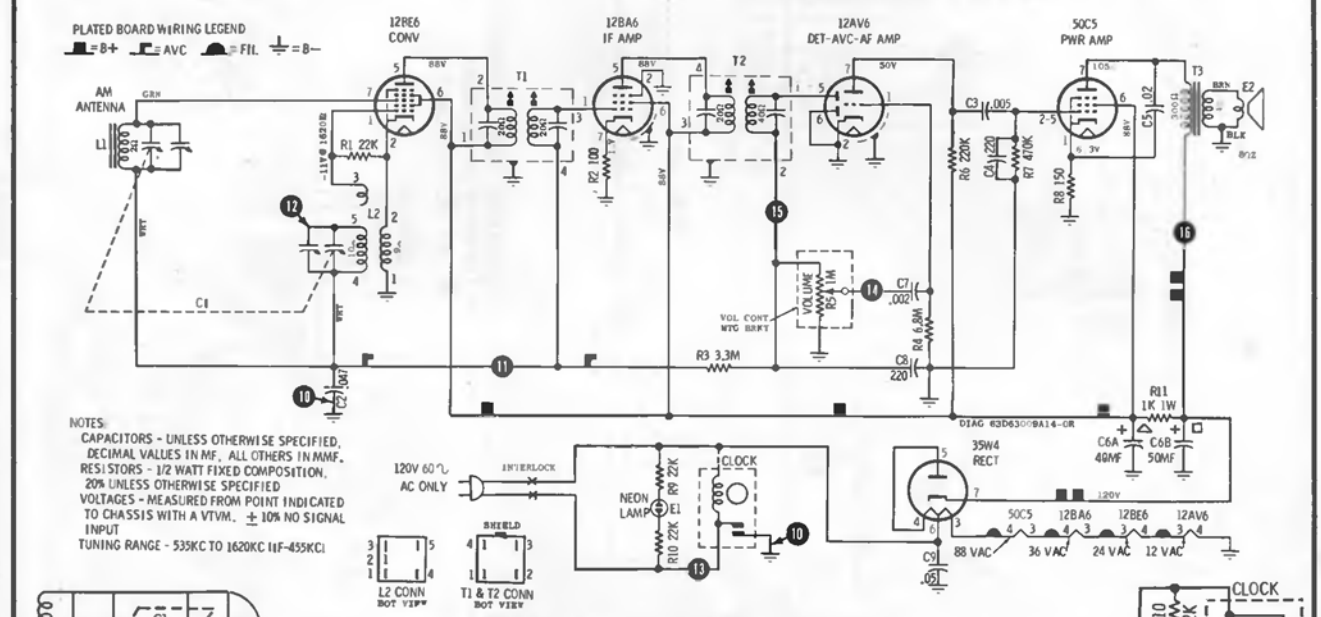


NOTES:
CAPACITORS - UNLESS OTHERWISE SPECIFIED, DECIMAL VALUES IN MF, ALL OTHERS IN MMF.
RESISTORS - 1/2 WATT FIXED COMPOSITION, 20% UNLESS OTHERWISE SPECIFIED
VOLTAGES - MEASURED FROM POINT INDICATED TO CHASSIS WITH A VTVM. ± 10% NO SIGNAL INPUT
TUNING RANGE - 535KC TO 1620KC (IF-455KC)

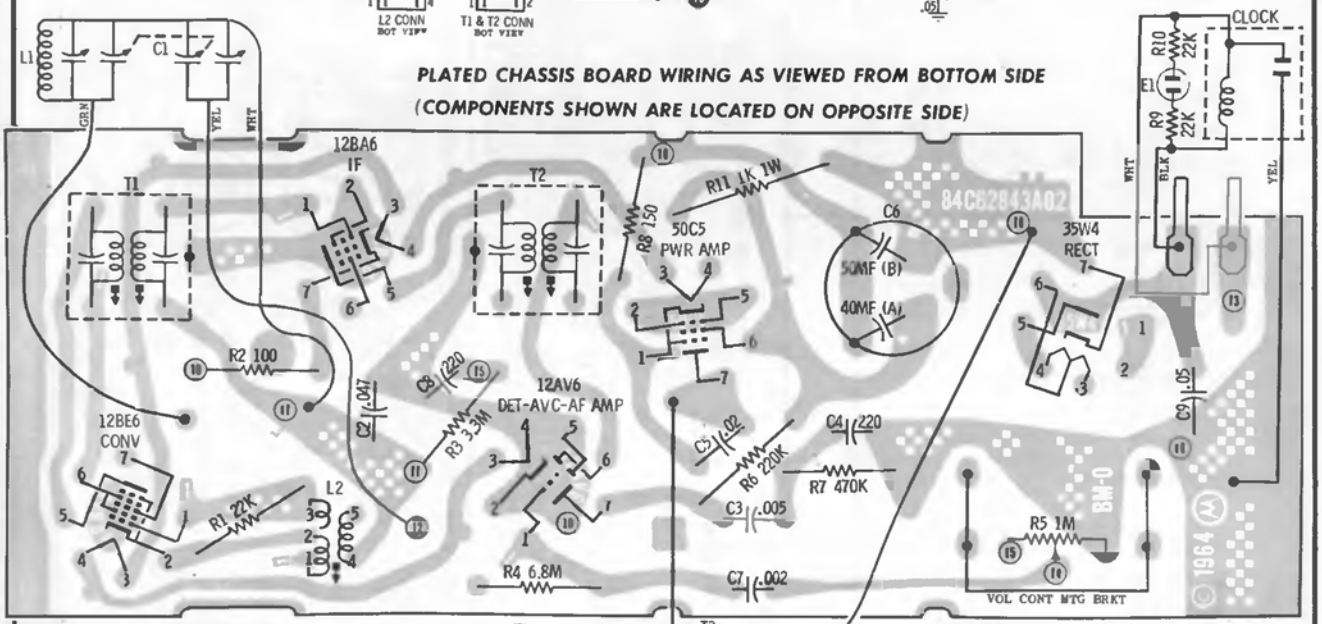


BOTTOM VIEW

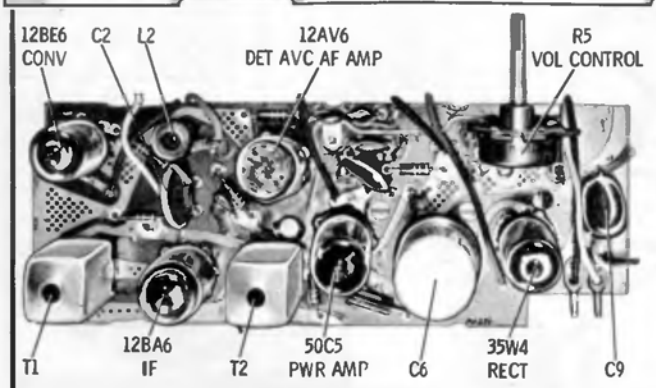


PARTS LOCATION

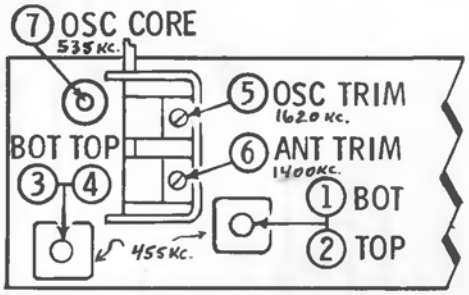


ALIGNMENT LOCATIONS

**MOTOROLA**

# MODEL AT23A
# CHASSIS HS-4143

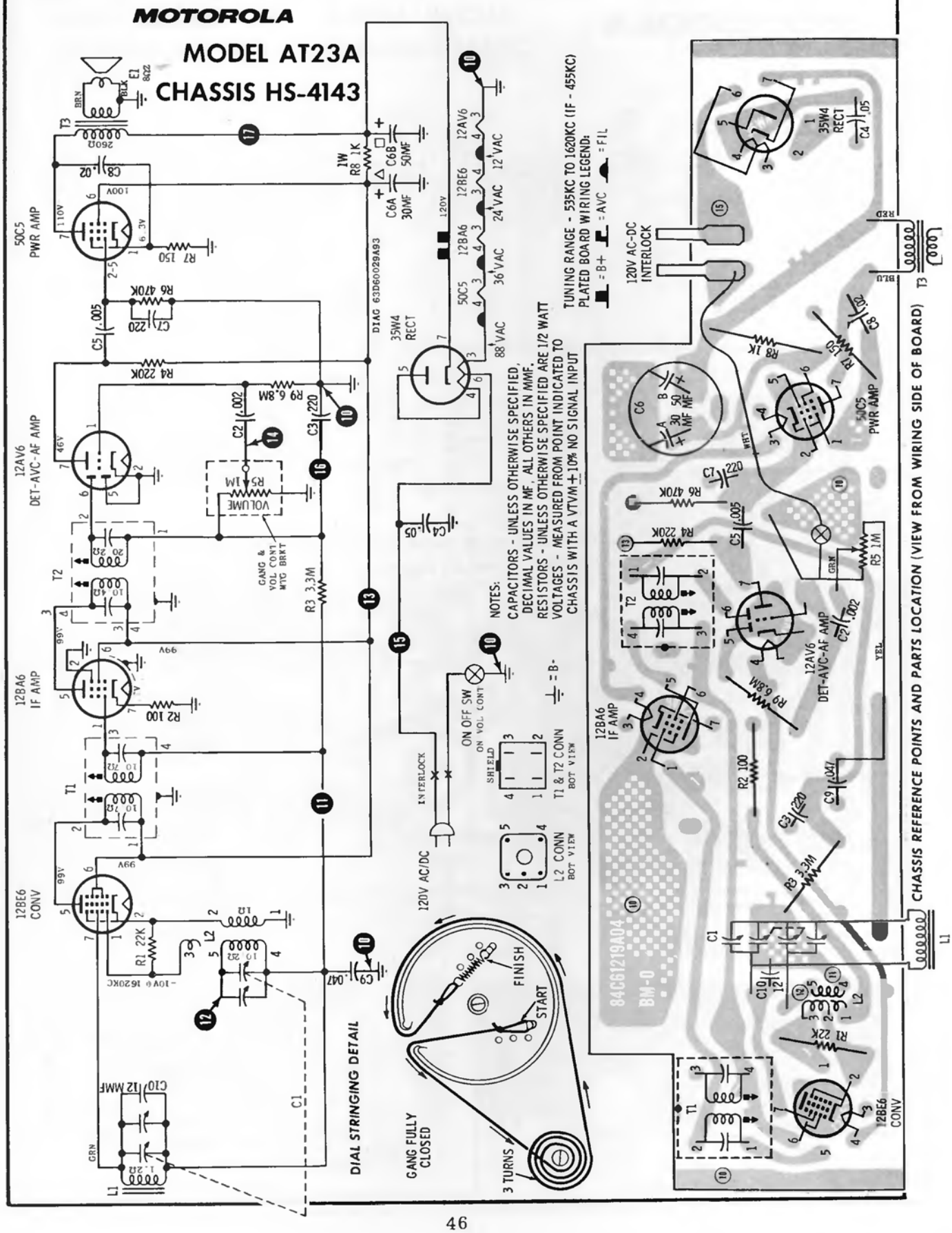

# MOTOROLA

## MODEL X60 CHASSIS HS-6127

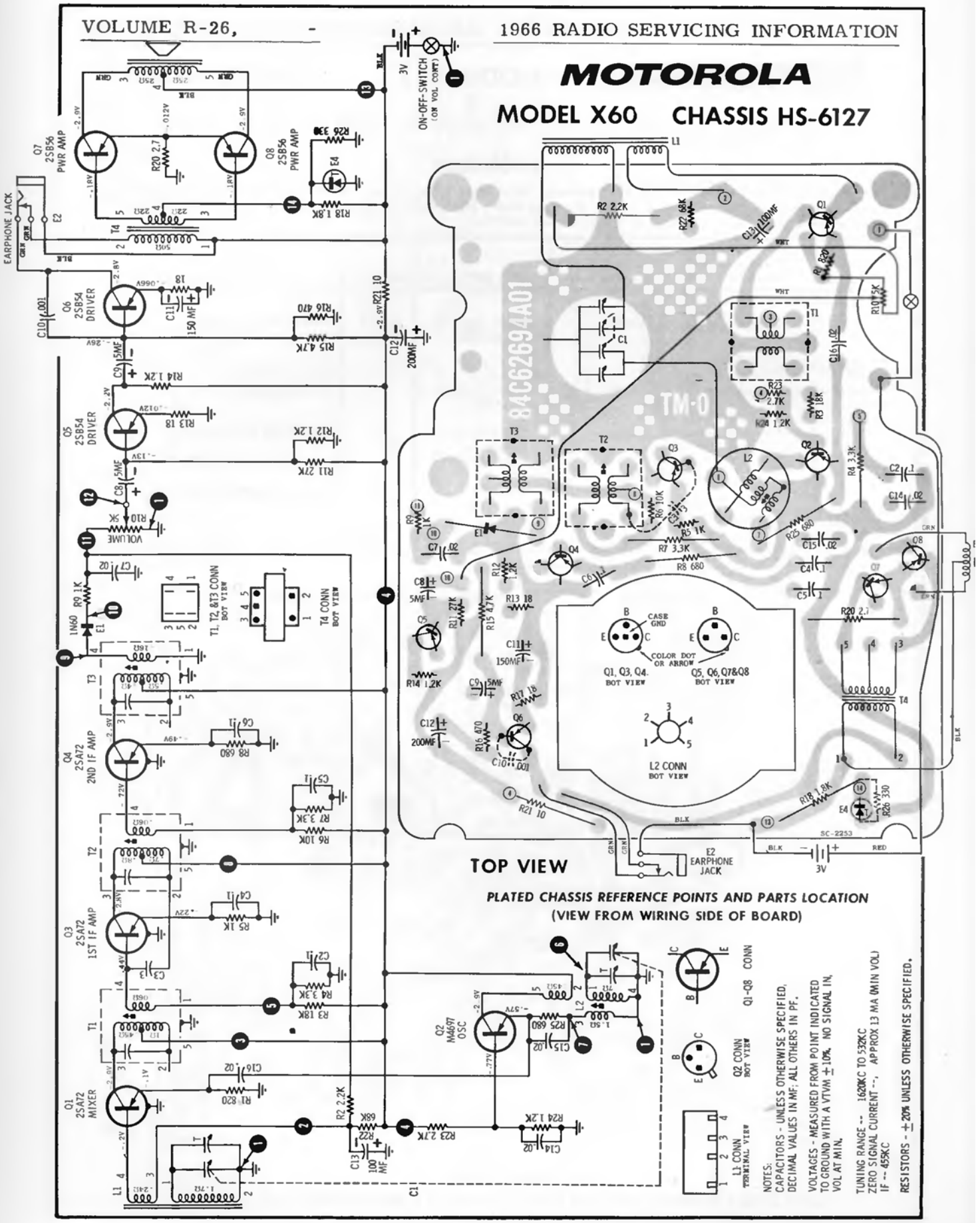

# MOTOROLA MODEL X65 CHASSIS HS-6133

(Diagram and other service data on the next page adjacent at right)

## ALIGNMENT

Connect an output meter across the speaker. Set volume to maximum. Attenuate signal generator output so as not to exceed 50 milliwatts (.64V) on output meter at all times to prevent overloading and AGC action. Alignment should be performed with the chassis installed.

| STEP | GENERATOR CONNECTION | GENERATOR FREQUENCY (1000 cycle mod) | GANG SETTING | ADJUST | REMARKS |
|---|---|---|---|---|---|
| IF ALIGNMENT | | | | | |
| 1. | Radiation loop* | 455Kc | Fully opened (1620Kc) | 1, 2, 3 & 4 | Adjust for maximum. |
| RF ALIGNMENT | | | | | |
| 2. | Radiation loop* | 1620Kc | Fully opened (1620Kc) | 5 | Adjust for maximum. |
| 3. | " | 1400Kc | Tune for maximum at 1400Kc | 6 | Adjust for maximum. |
| 4. | " | 1400Kc | Tune for maximum at 1400Kc | 7 | Adjust for maximum. |

*Connect generator output across 5" diameter, 5-turn loop and couple inductively to receiver antenna. Keep radiation loop at least 15" from receiver antenna.

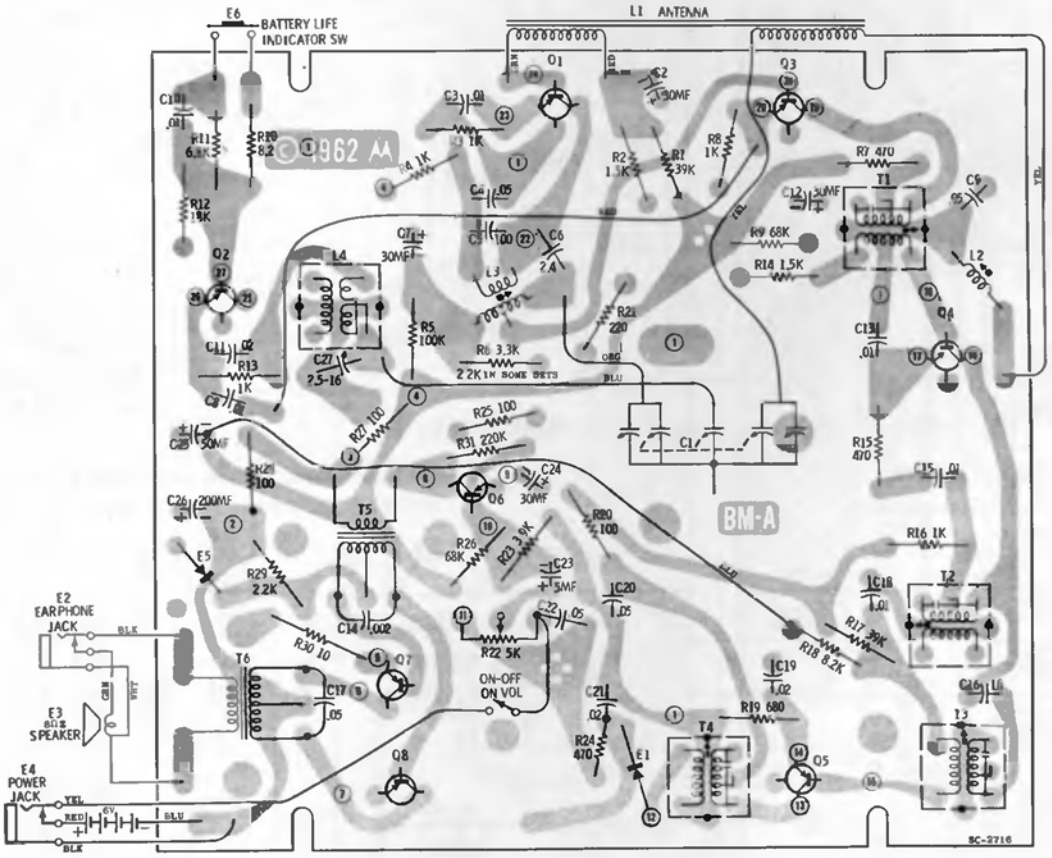


**BOTTOM VIEW**

*PLATED CHASSIS REFERENCE POINTS AND PARTS LOCATION* (VIEW FROM WIRING SIDE OF BOARD)

# MOTOROLA

## MODEL X65
## CHASSIS HS-6133

(See preceding page at left for additional service data)

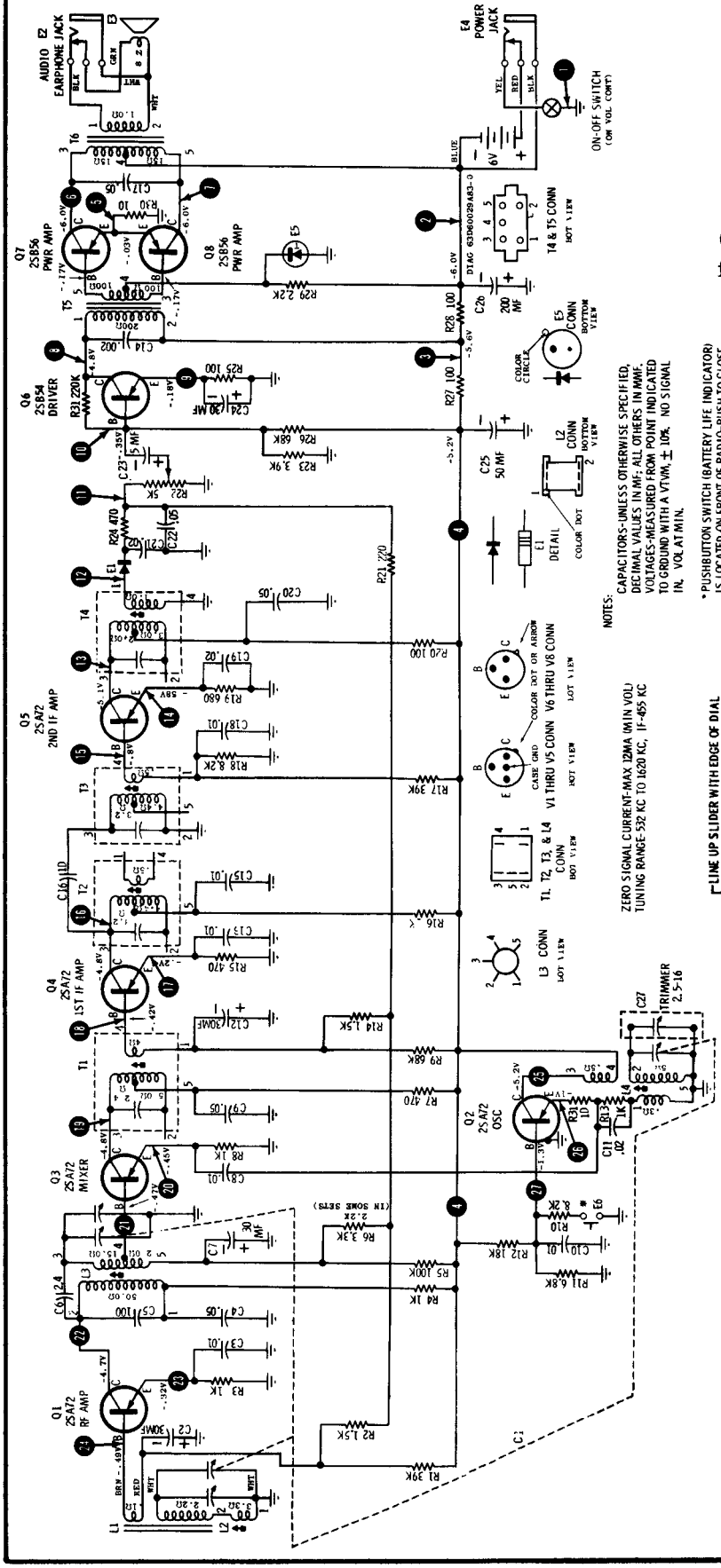


The external power supply jack, when used in conjunction with the optional accessory power supply adaptor, Model HK-73), allows the radio to be operated from a 120 volt, 60 cycle, AC power supply. When the HK-73 is plugged into the radio, the batteries are automatically disconnected from the radio.

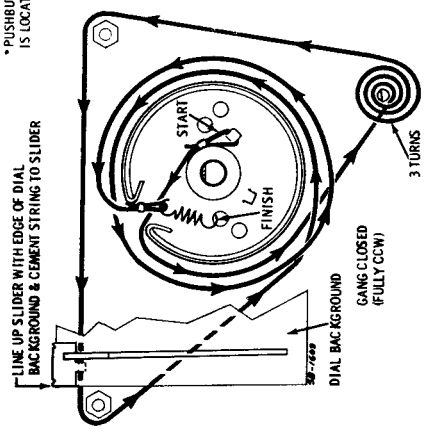


DIAL STRINGING DETAIL

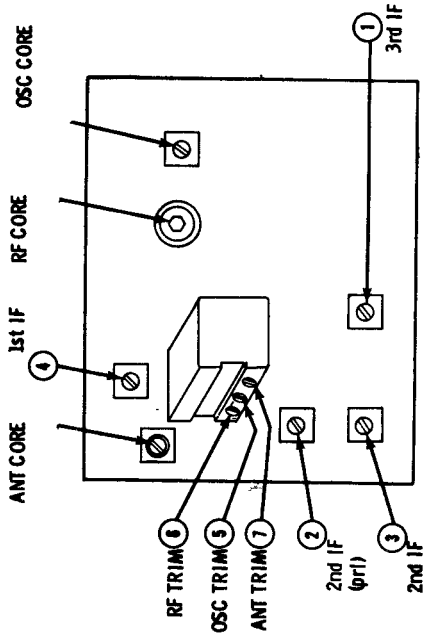


ALIGNMENT LOCATION DETAIL

# MOTOROLA

## MODEL X62 CHASSIS HS-6131

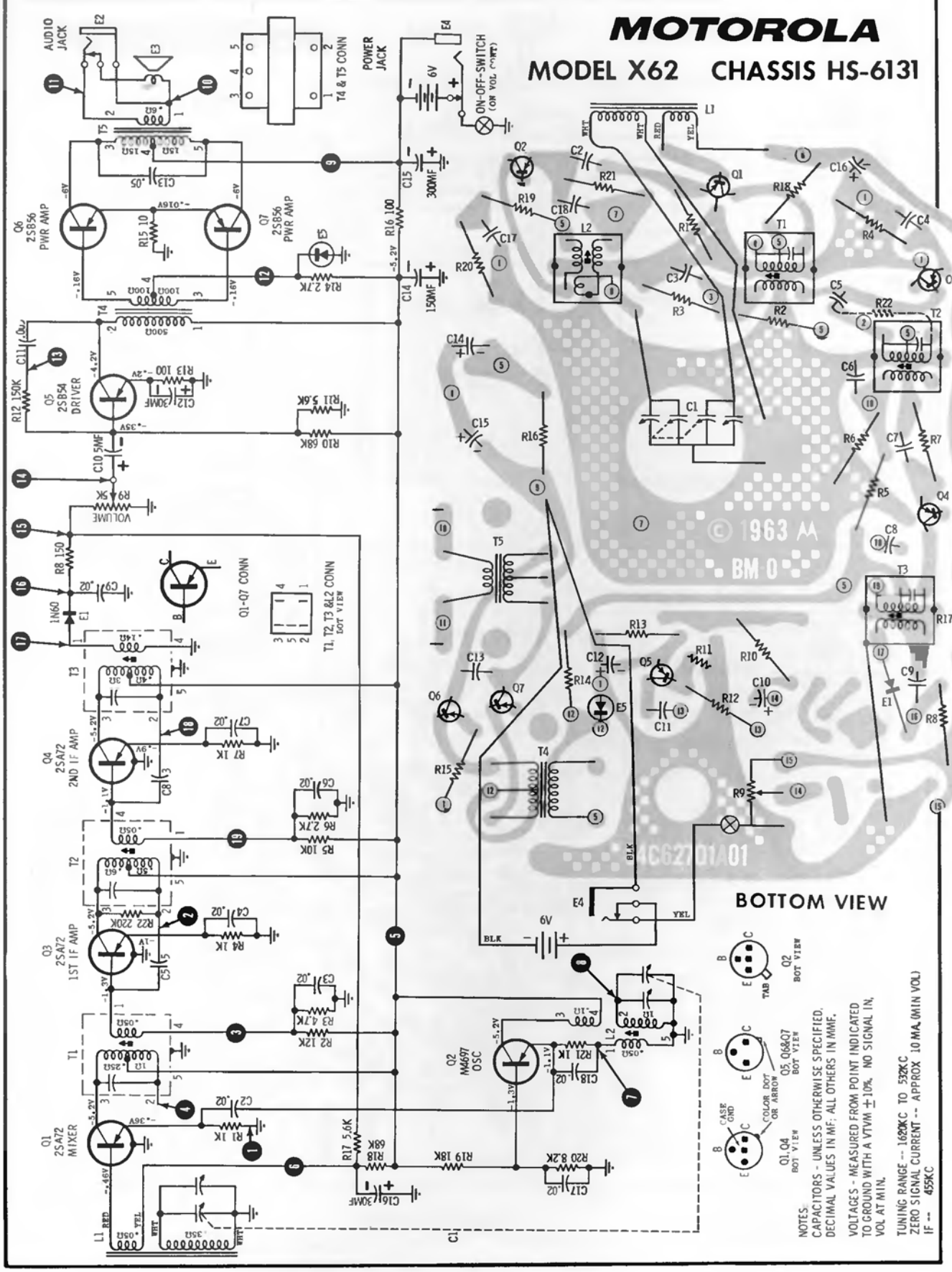

# MOTOROLA

## MODEL X58

## CHASSIS HS-6136

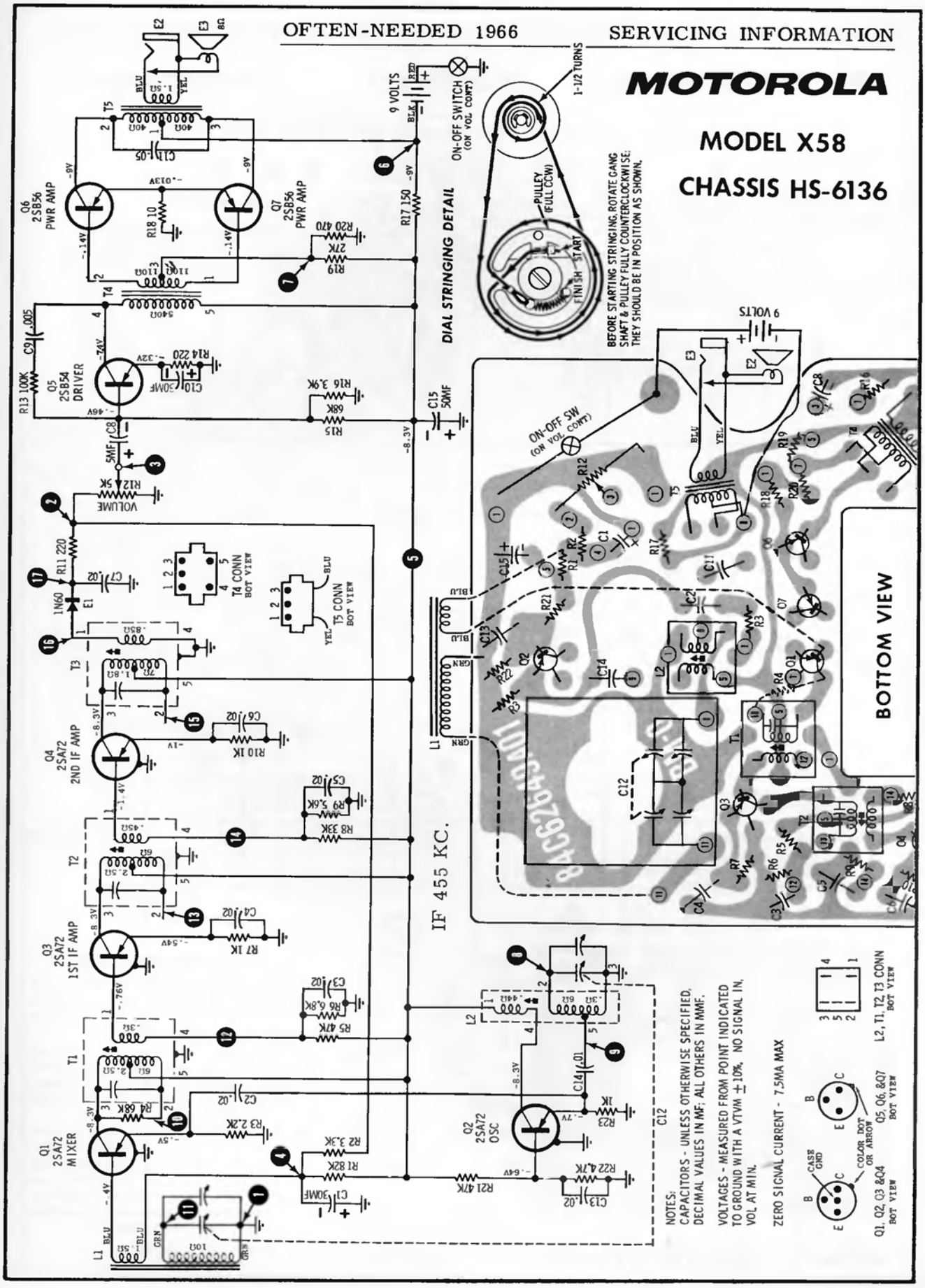


PLATED CHASSIS REFERENCE POINTS AND PARTS LOCATION (VIEW FROM WIRING SIDE OF BOARD)

# MOTOROLA MODEL X61 CHASSIS HS-6137

(Other service material on the next page adjacent at right)

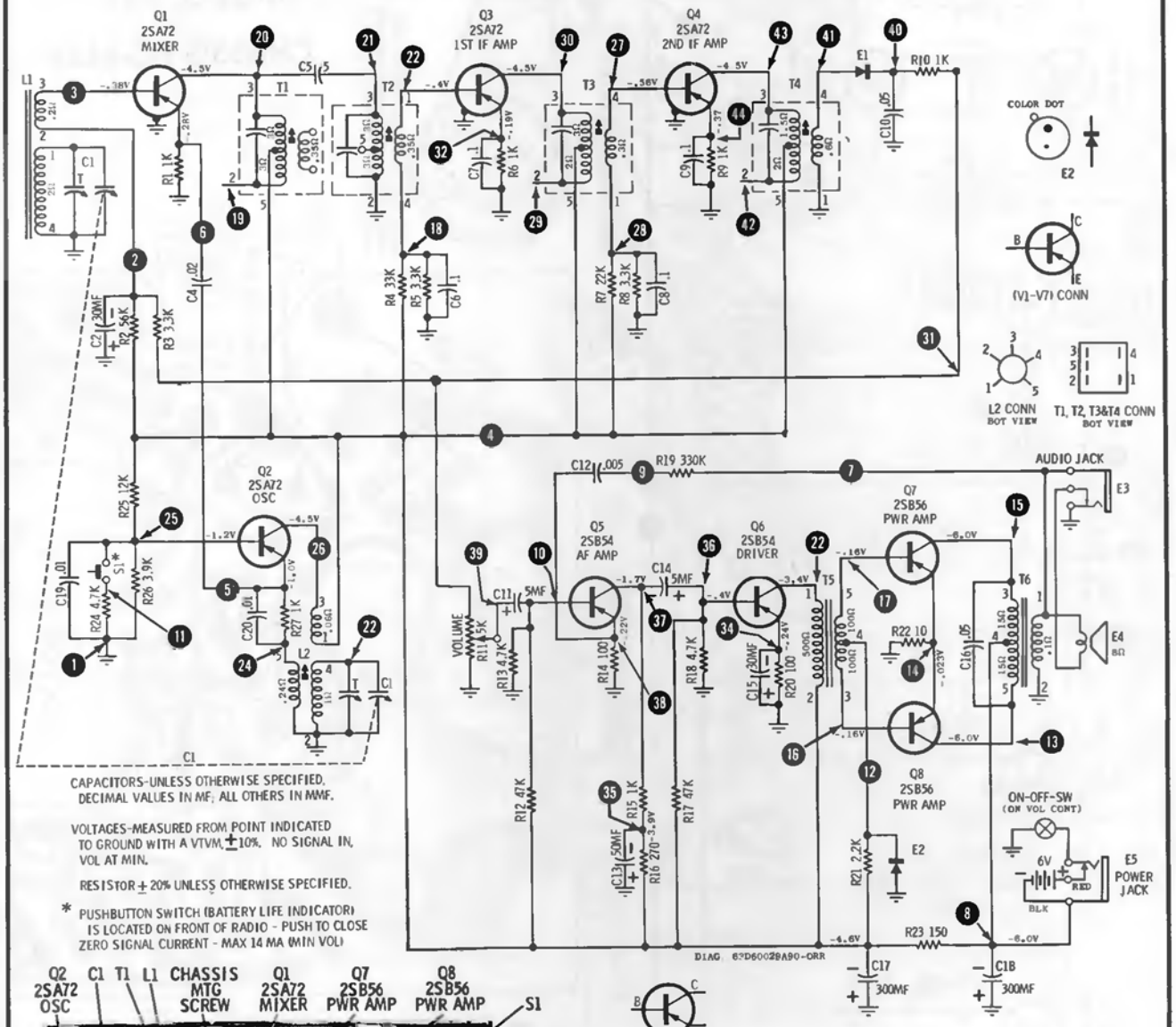


CAPACITORS-UNLESS OTHERWISE SPECIFIED, DECIMAL VALUES IN MF; ALL OTHERS IN MMF.

VOLTAGES-MEASURED FROM POINT INDICATED TO GROUND WITH A VTVM, ±10%. NO SIGNAL IN, VOL AT MIN.

RESISTOR ± 20% UNLESS OTHERWISE SPECIFIED.

* PUSHBUTTON SWITCH (BATTERY LIFE INDICATOR) IS LOCATED ON FRONT OF RADIO - PUSH TO CLOSE ZERO SIGNAL CURRENT - MAX 14 MA (MIN VOL)

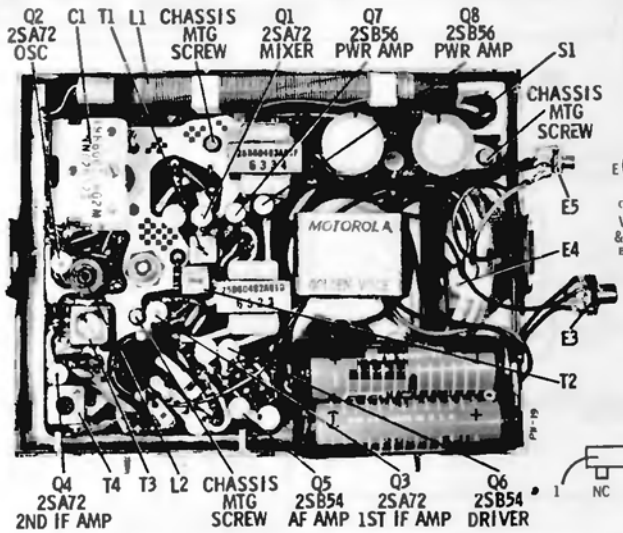


PARTS LOCATION

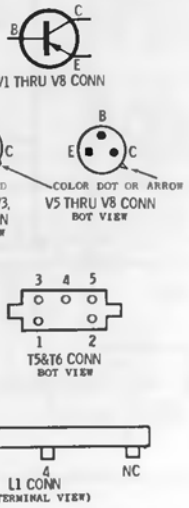


## CHASSIS SERVICE AND REMOVAL

1. From front of radio, remove two (2) control knobs and nuts that mount the earphone jack and the external power supply jack.
2. Remove the two (2) cabinet mounting screws (they are located on the sides of the cabinet, under the carrying handle - lift the handle to expose them).
3. Lift the escutcheon and chassis as an assembly out of the cabinet.
4. To remove the chassis from the escutcheon, remove the battery, remove three (3) chassis mounting screws and, if necessary, unsolder leads connected to chassis.

**MOTOROLA**

Model X61, Chassis HS-6137
(Continued)

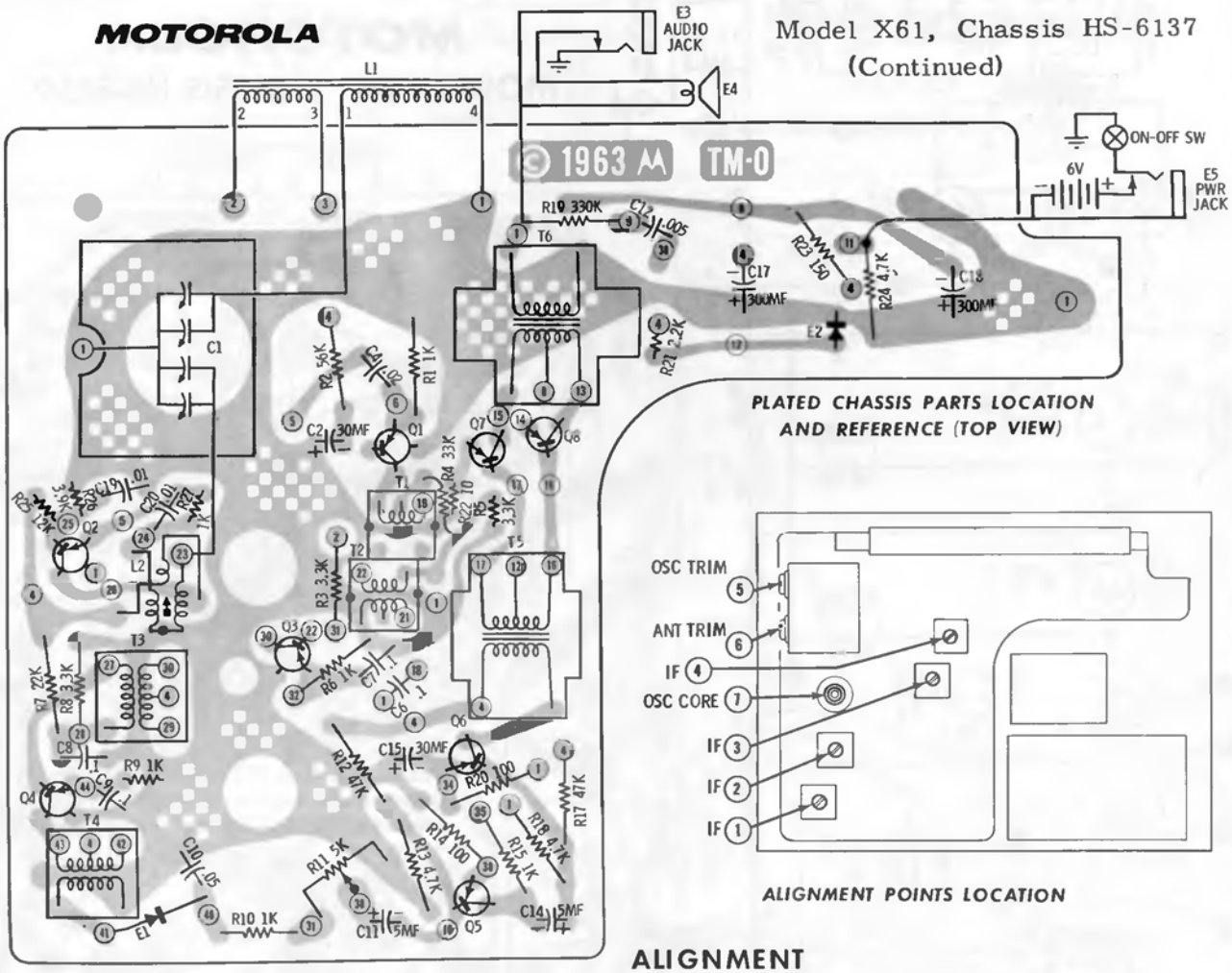


*PLATED CHASSIS PARTS LOCATION AND REFERENCE (TOP VIEW)*




*ALIGNMENT POINTS LOCATION*

## ALIGNMENT

Connect an output meter across the speaker. Set volume to maximum. Attenuate signal generator output so as not to exceed .40 volt on output meter at all times to prevent overloading and AGC action. Alignment should be performed with the chassis in the cabinet.

| STEP | GENERATOR CONNECTION | GENERATOR FREQUENCY (400 cycle mod) | GANG SETTING | ADJUST | REMARKS |
|---|---|---|---|---|---|
| IF ALIGNMENT | | | | | |
| 1. | Radiation loop* | 455Kc | Fully opened (1620Kc) | 1, 2, 3 & 4 | Adjust for maximum. Repeat adjustments #1 and #2. |
| RF ALIGNMENT | | | | | |
| NOTE: | Before performing RF alignment, check oscillator tuning range; with gang fully opened, set should tune to 1620Kc ± 15Kc; with gang fully closed, 532Kc ± 5Kc. If oscillator does not cover this range, perform Steps A, B and C at this point. . . . .otherwise, skip over them and go on to Step 2. | | | | |
| | A. Radiation loop* | 532Kc | Fully closed (532Kc) | 7 | Adjust for maximum. |
| | B. Radiation loop* | 1620Kc | Fully opened (1620Kc) | 5 | Adjust for maximum. |
| | C. Repeat Steps A and B until oscillator covers required range; Step B should be last adjustment. | | | | |
| 2. | Radiation loop* | 1620Kc | Fully opened (1620Kc) | 5 | Adjust for maximum. |
| 3. | Radiation loop* | 1400Kc | Tune for maximum | 6 | Adjust for maximum. |

*Connect generator output across 5" diameter, 5-turn loop and couple inductively to receiver antenna. Keep radiation loop at least 12" from receiver antenna.

# MOTOROLA

## MODEL X64 CHASSIS HS-6139

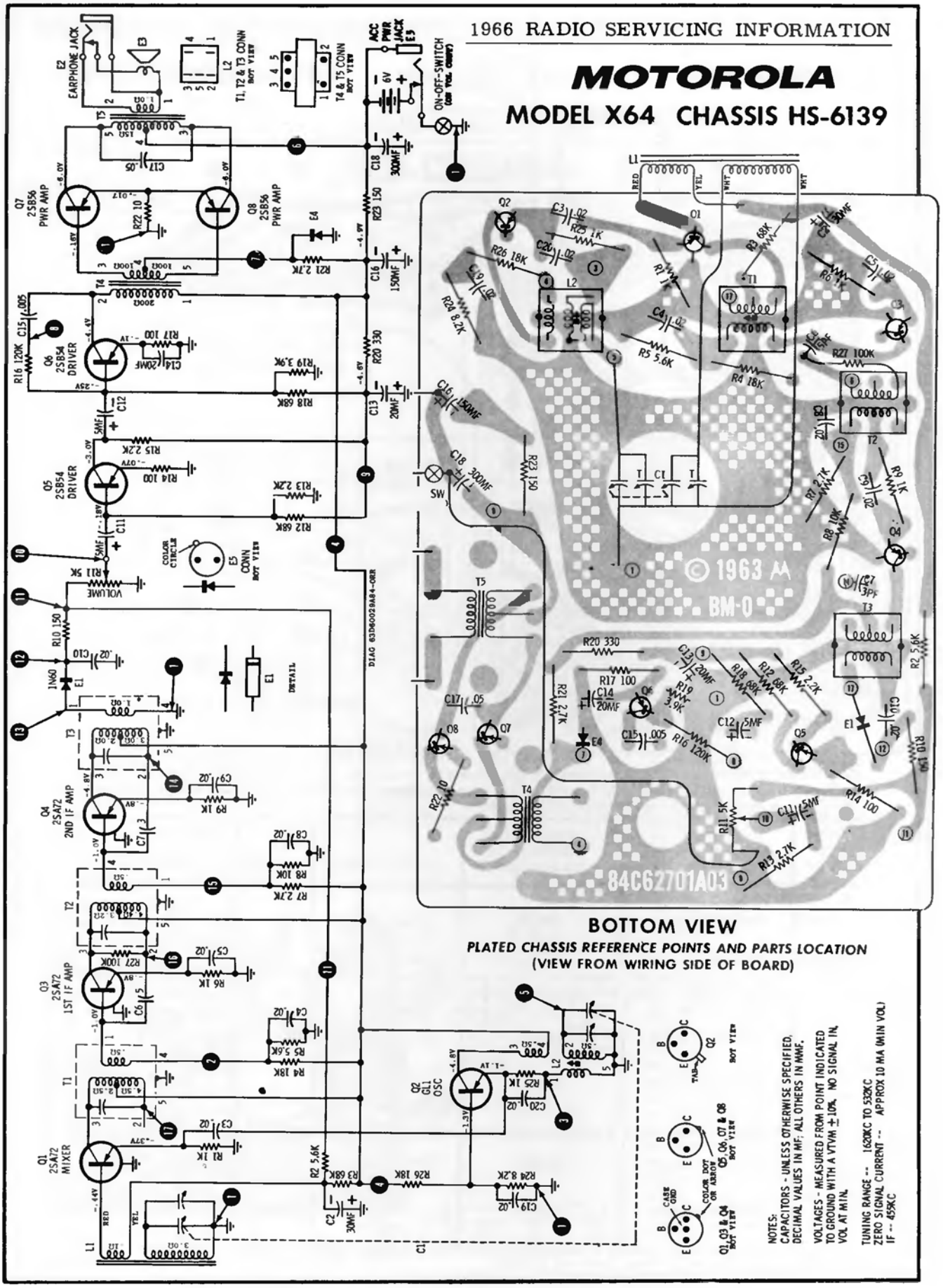

# MOTOROLA

## MODEL XP68B
## CHASSIS HS-6202

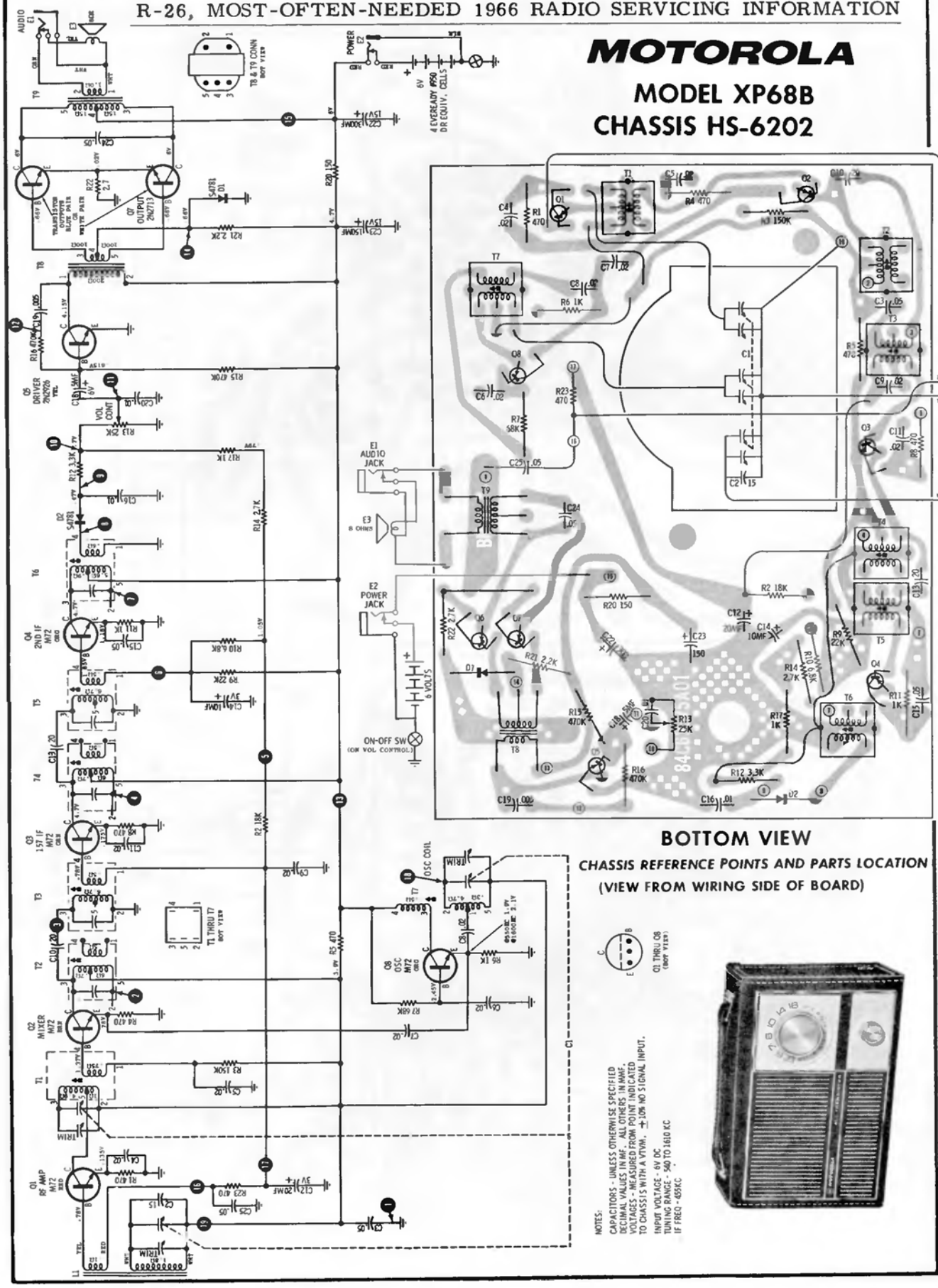

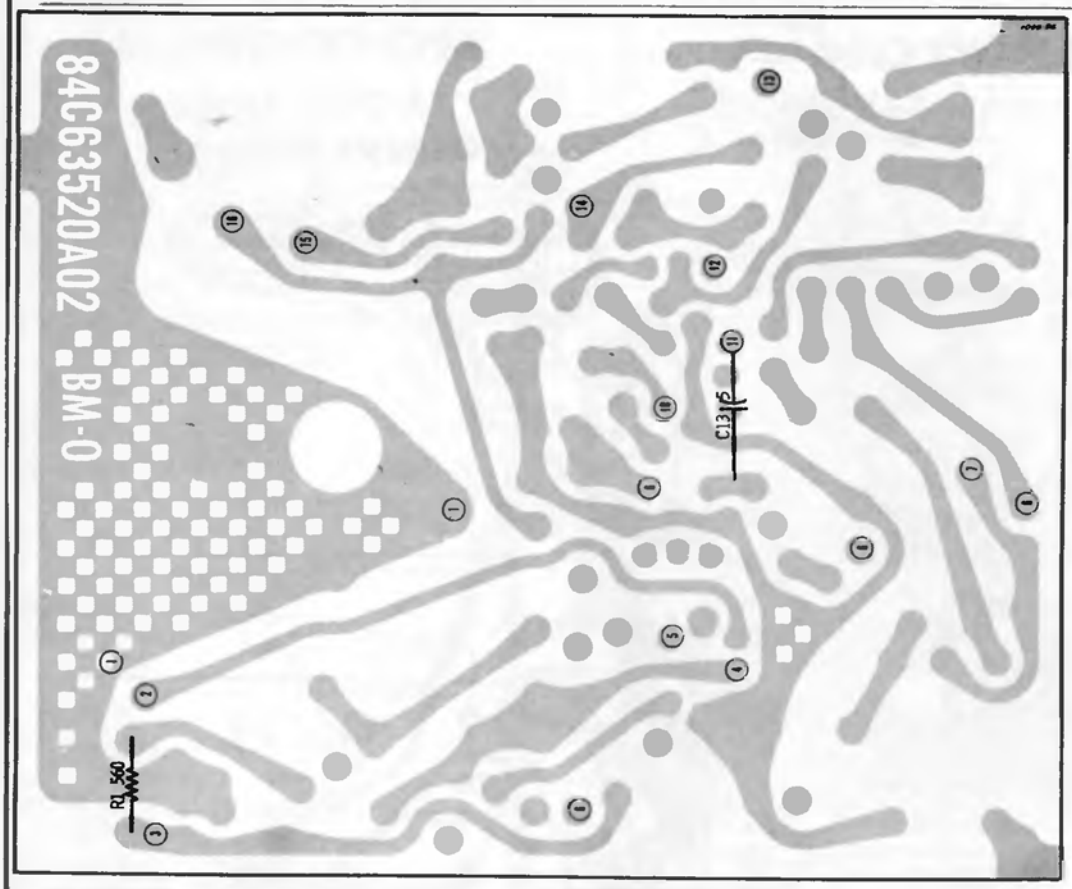


**BOTTOM VIEW**

*MODEL XP69B - PLATED CHASSIS REFERENCE POINTS AND PARTS LOCATION*
(VIEW FROM WIRING SIDE OF BOARD)

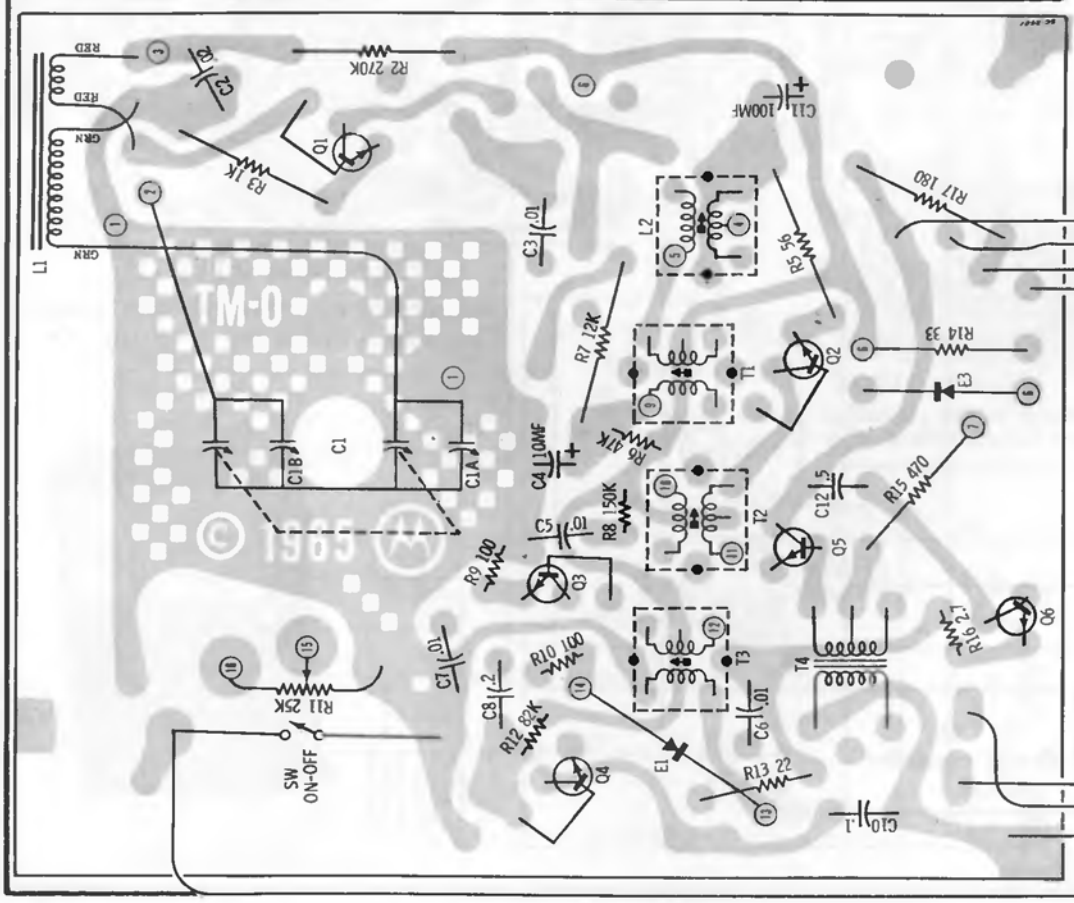


**TOP VIEW**

*MODEL XP69B - PLATED CHASSIS REFERENCE POINTS AND PARTS LOCATION*
(VIEW FROM COMPONENT SIDE OF BOARD)

MOTOROLA Model XP69B, Chassis HS-6207

(See page adjacent at right for circuit diagram)

MOTOROLA Model XP69B, Chassis HS-6207 (See preceding page also)

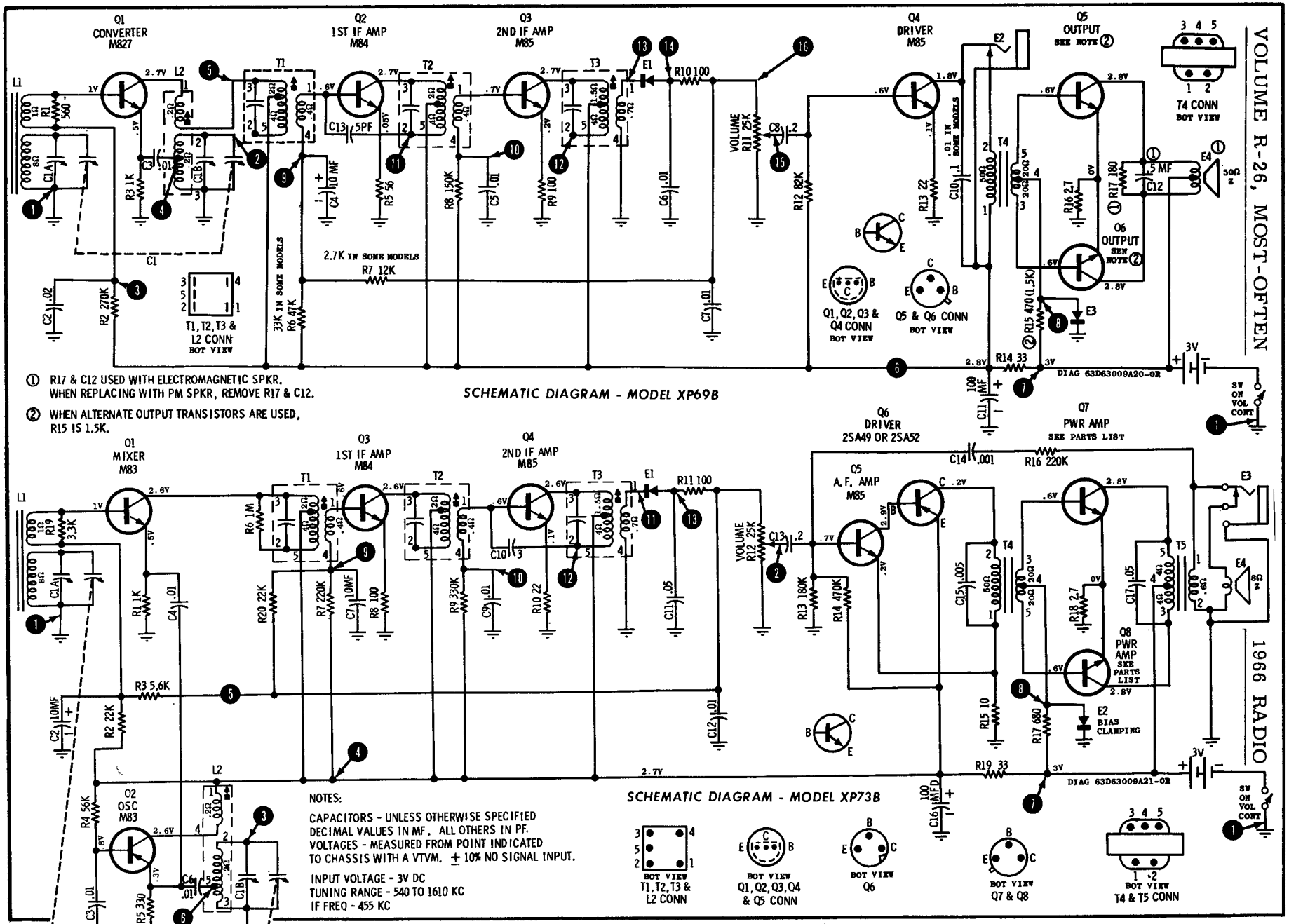


MOTOROLA Model XP73B, Chassis HS-6208 (Also see next page, over)

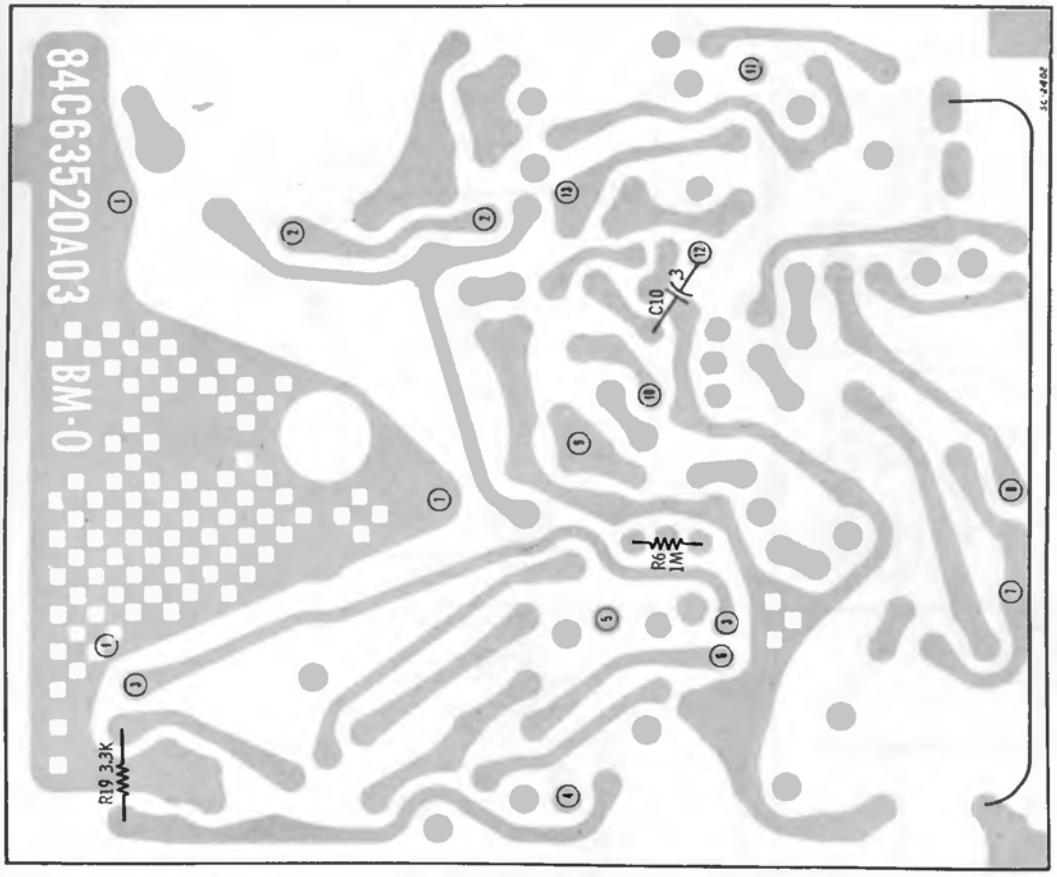


**BOTTOM VIEW**

*MODEL XP73B - PLATED CHASSIS REFERENCE POINTS AND PARTS LOCATION*

(VIEW FROM WIRING SIDE OF BOARD)

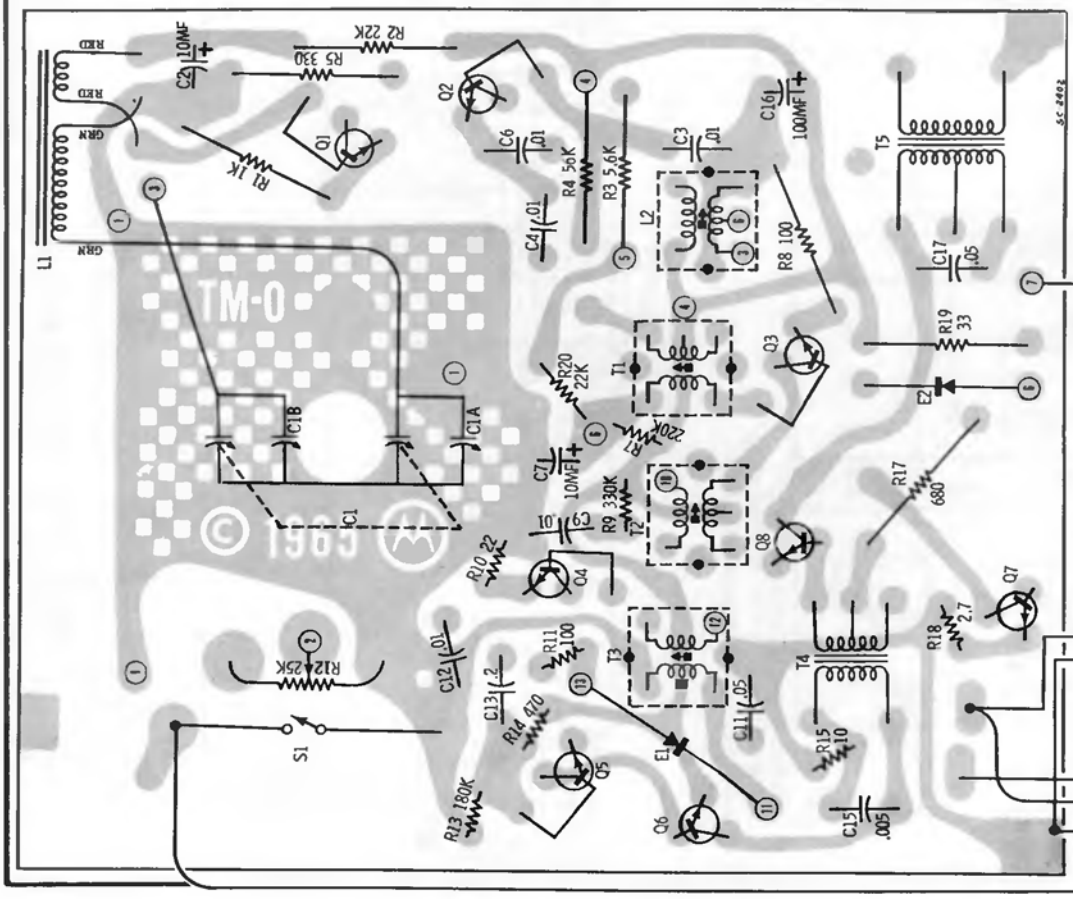


**TOP VIEW**

*MODEL XP73B - PLATED CHASSIS REFERENCE POINTS AND PARTS LOCATION*

(VIEW FROM COMPONENT SIDE OF BOARD)

MOTOROLA Model XP73B, Chassis HS-6208

(See preceding page for circuit diagram)

# MOTOROLA MODELS XT2B, 3B; XC11B, 12B, 13B, 14B

## CHASSIS HS-7201

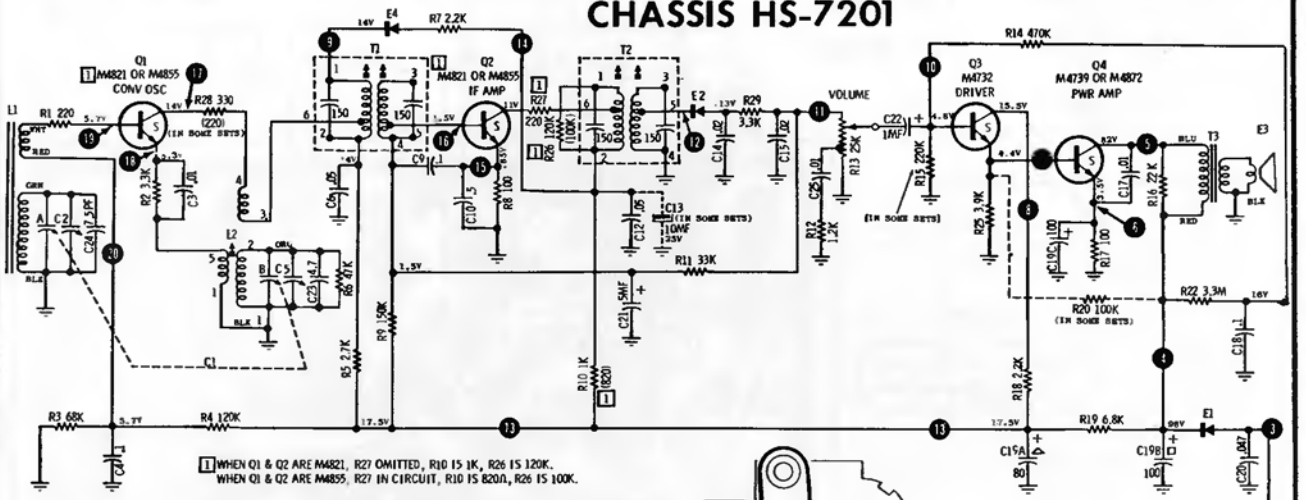


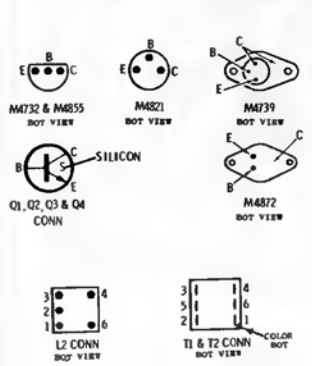


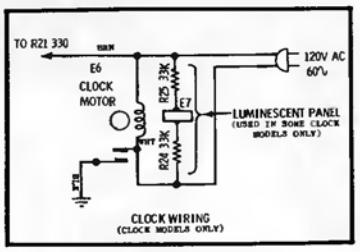


NOTES:
CAPACITORS-UNLESS OTHERWISE SPECIFIED, DECIMAL VALUES IN MF. ALL OTHERS IN PF
VOLTAGES-MEASURED FROM POINT INDICATED TO GROUND WITH A VTVM. ± 10% NO SIGNAL IN. VOL AT MIN.
AM RANGE 535KC TO 1620KC AM IF 455KC

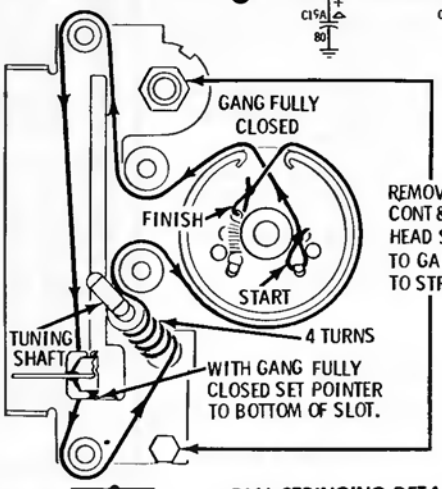


DIAL STRINGING DETAIL

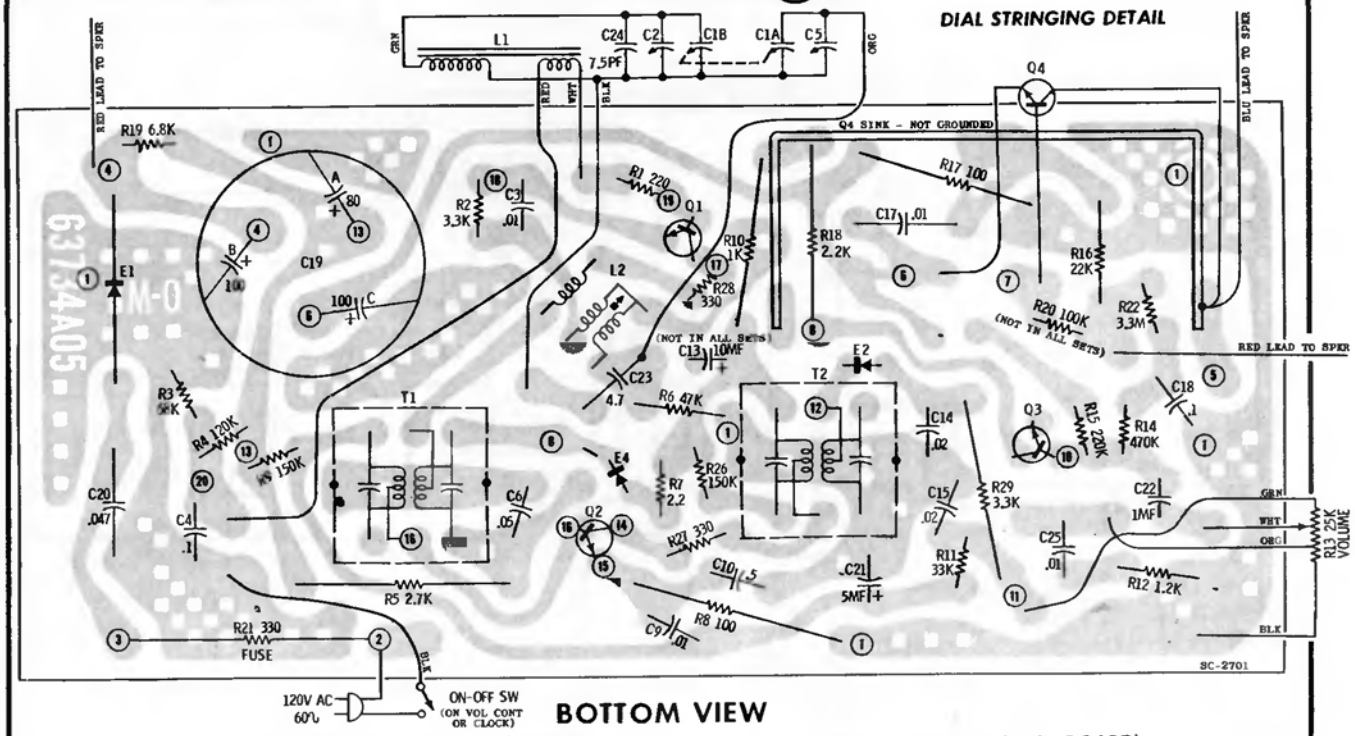


BOTTOM VIEW

PLATED CHASSIS REFERENCE POINTS AND PARTS LOCATION (VIEW FROM WIRING SIDE OF BOARD)

**MODELS TC7B, TC8B TT14B, TT15B**

**CHASSIS HS-8206 HS-8207**

**MOTOROLA**

(For diagram see next page adjacent at right)

**CHASSIS REMOVAL (All Models)**

1. Remove selector and tuning knobs only. Loudness and tone control knobs are captivated.

2. Remove clock control knobs.

3. Remove clock crystal by inserting screwdriver between cabinet and bottom edge of crystal below the letters AM on dial scale. Release catch and lift out crystal.

4. Remove dial pointer by carefully pulling straight out.

5. From rear of chassis, remove three (3) screws along front chassis apron from below chassis.

6. Remove two (2) screws on vertical chassis above loudness control.

7. Unsolder speaker leads and necessary clock leads.

8. Carefully pull chassis from cabinet front.

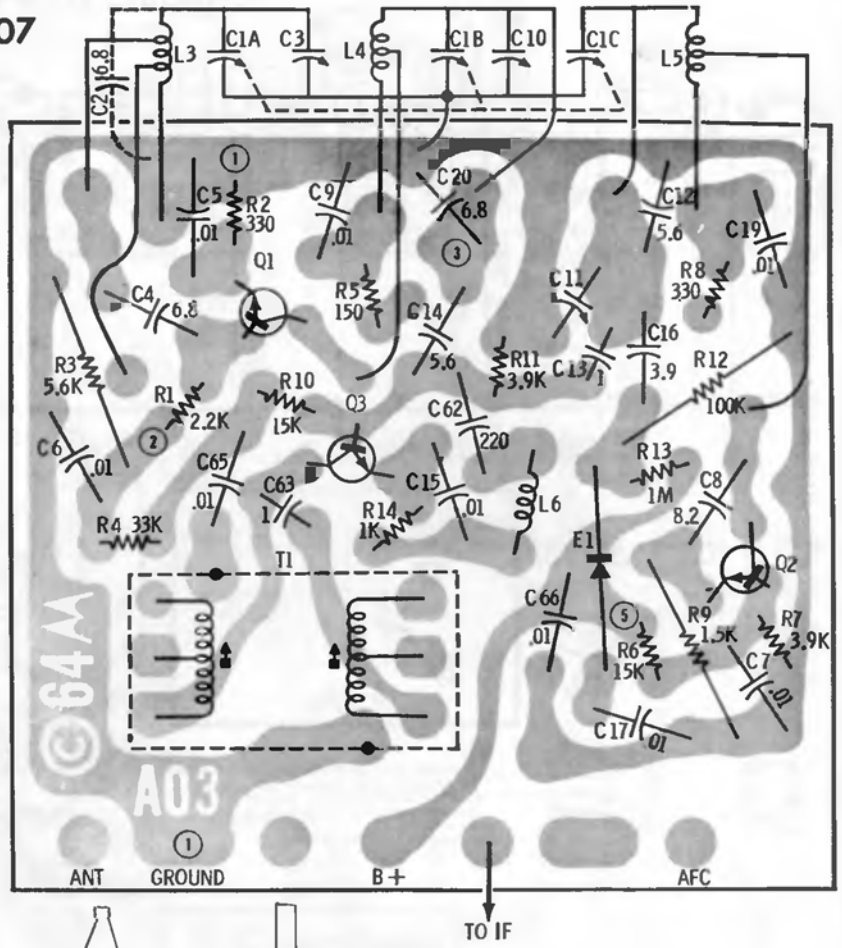


**TOP VIEW**

***FM-RF PLATED BOARD (PART OF CHASSIS HS-8206 & HS-8207)***

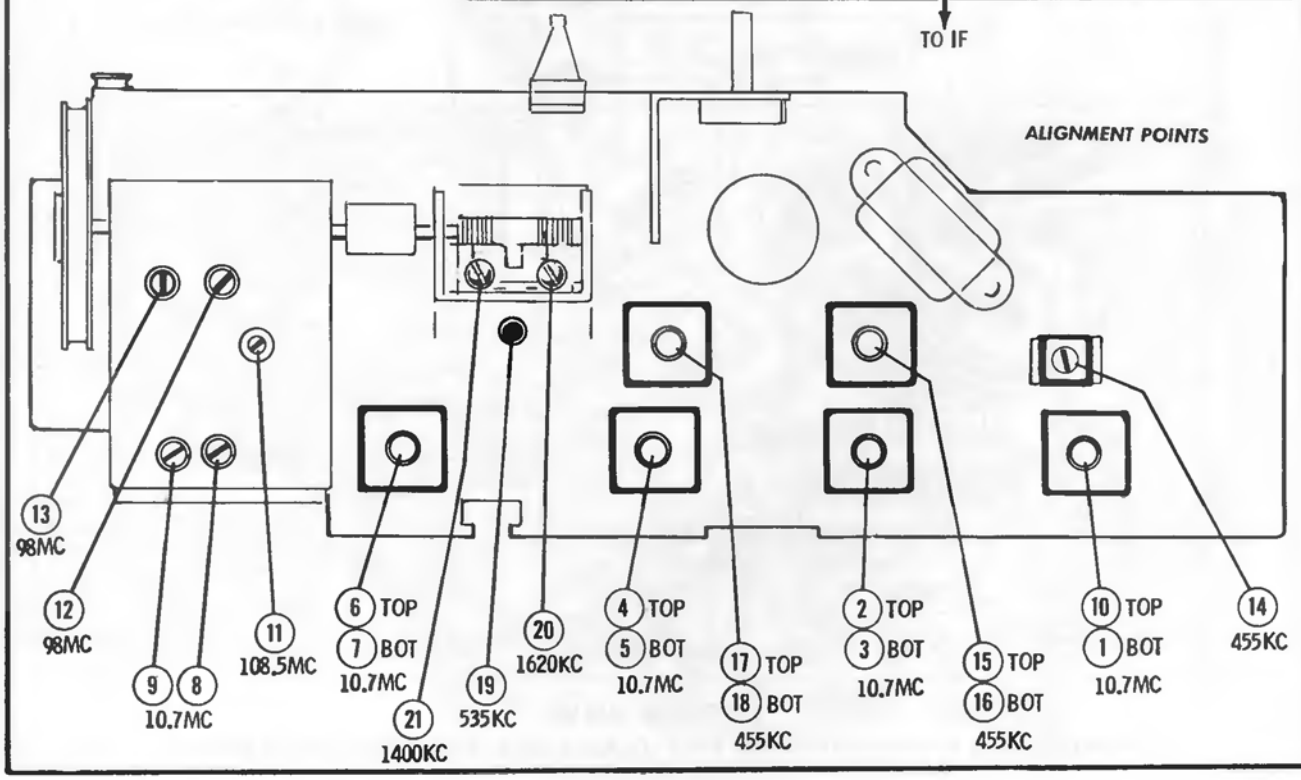

(Continued)

# MOTOROLA

## MODELS CHASSIS
## TC7B, TC8B HS-8206
## TT14B, TT15B HS-8207

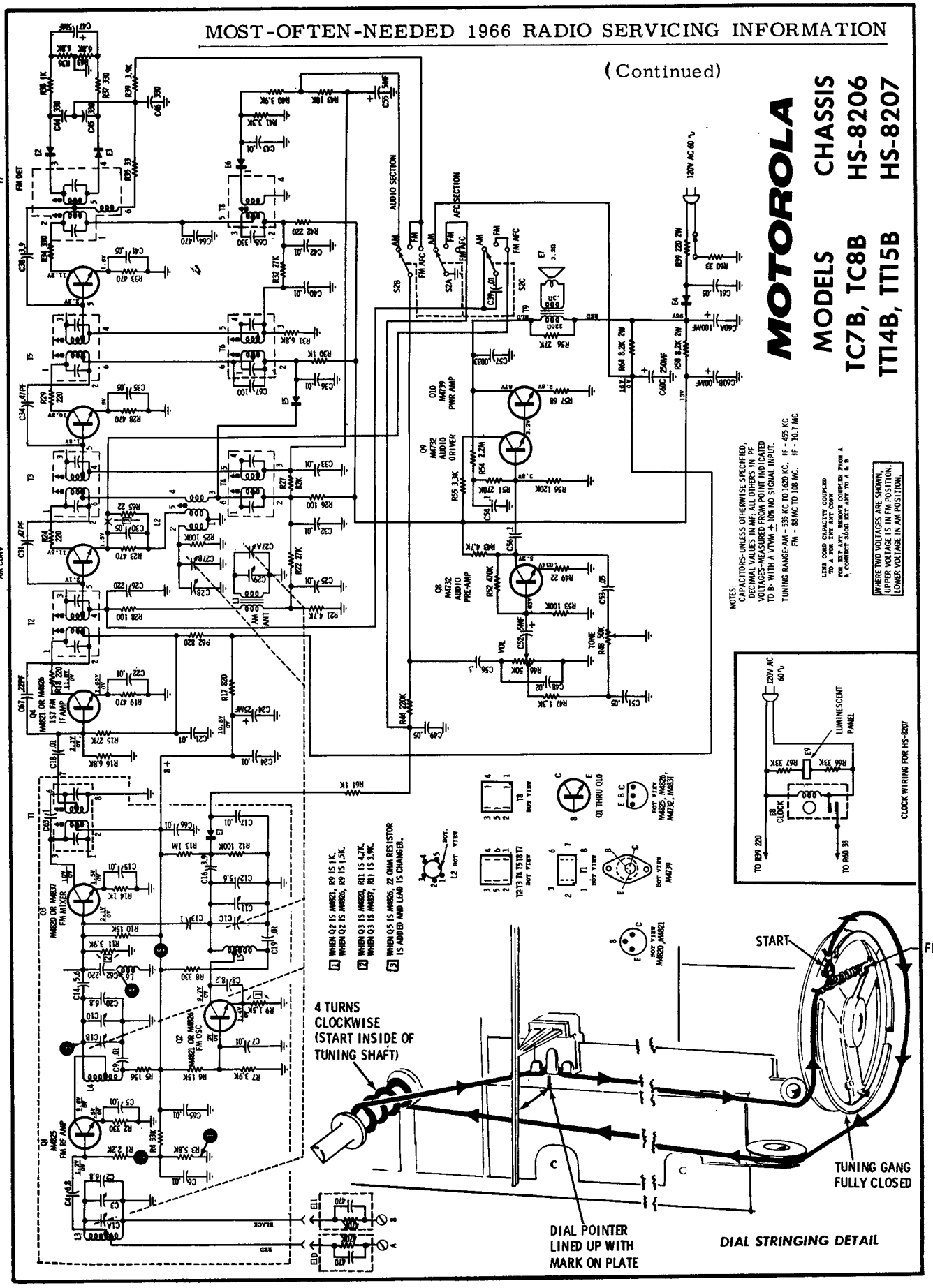

# MOTOROLA

| MODELS | MODEL | CHASSIS |
|---|---|---|
| BC9B | BT13A | HS-8201 |
| BT16B | BC6A | HS-8202 |

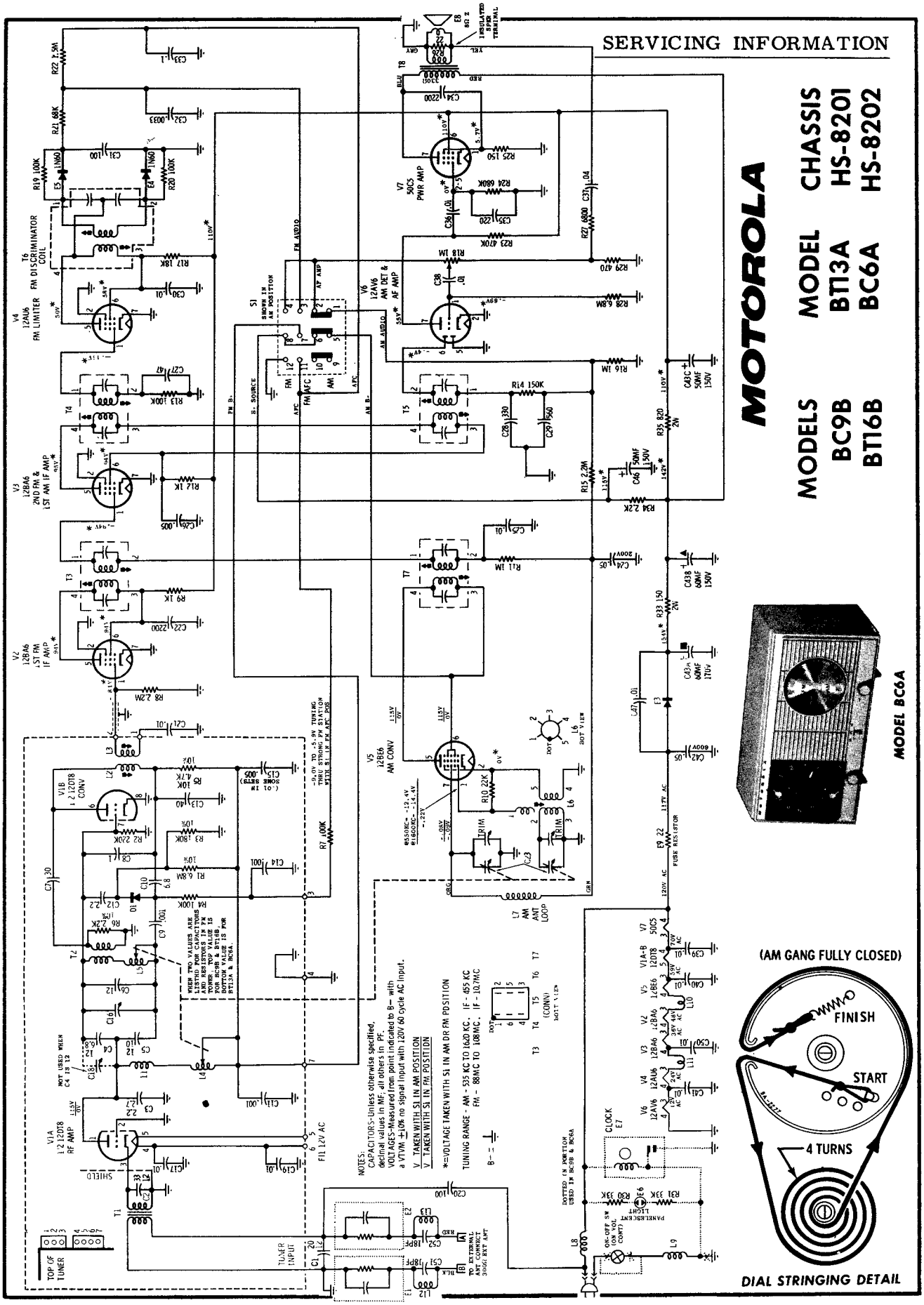

# MOTOROLA

## MODEL XP1C CHASSIS HS-66200

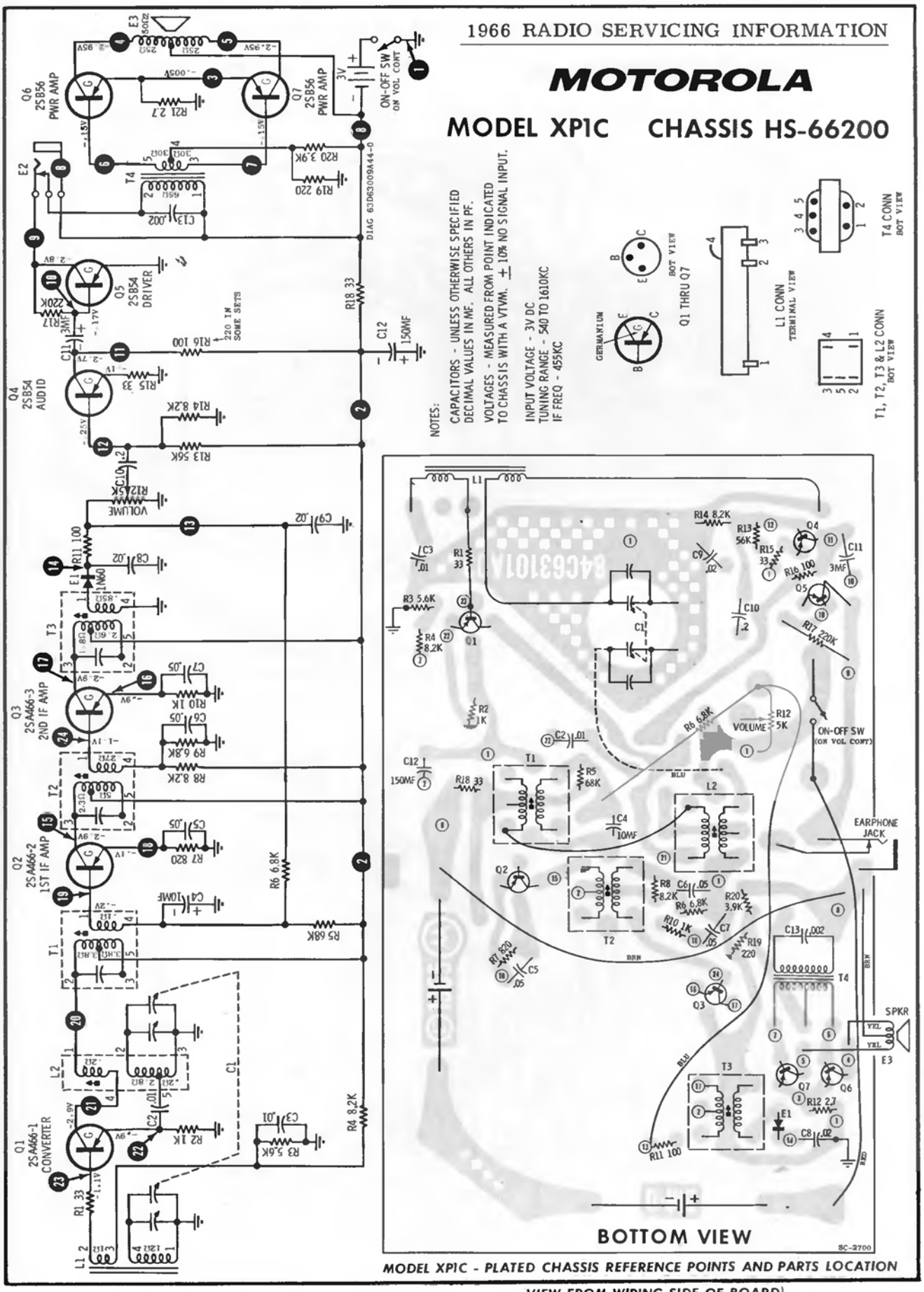


MODEL XP1C - PLATED CHASSIS REFERENCE POINTS AND PARTS LOCATION

VIEW FROM WIRING SIDE OF BOARD)

# MOTOROLA

(Diagram and other data on page at right)

## MODEL XP3C
## CHASSIS HS-66202

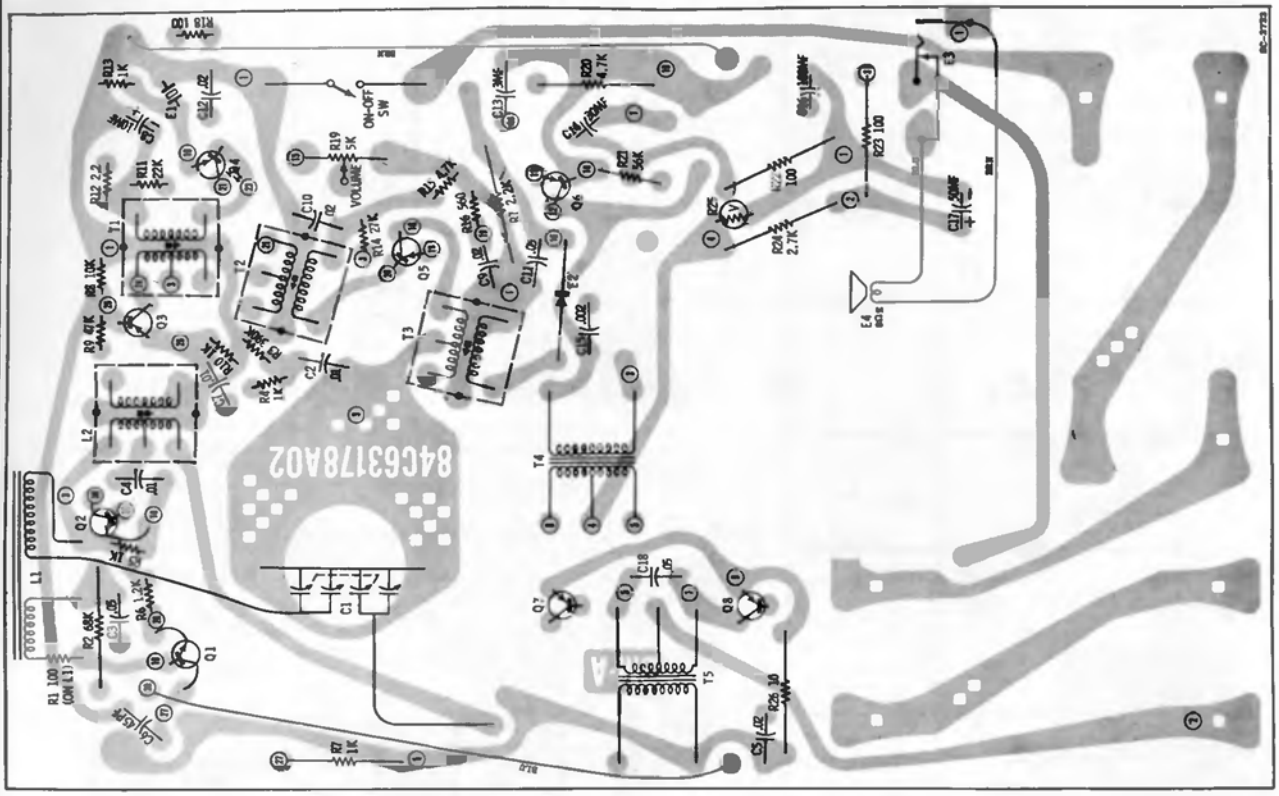


**BOTTOM VIEW** MODEL XP3C PLATED CHASSIS REFERENCE POINTS AND PARTS LOCATION (VIEW FROM WIRING SIDE OF BOARD)

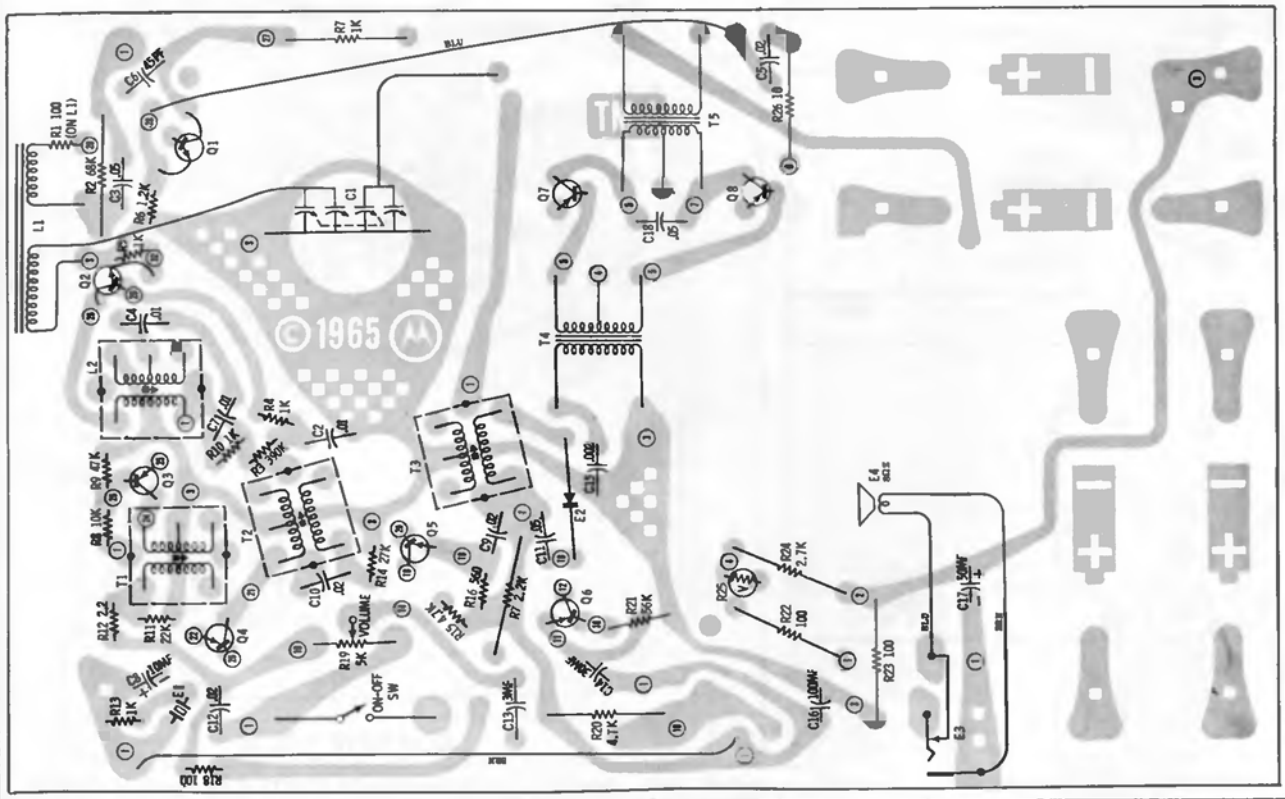


**TOP VIEW** MODEL XP3C PLATED CHASSIS REFERENCE POINTS AND PARTS LOCATION (VIEW FROM COMPONENT SIDE OF BOARD)

# MOTOROLA

## MODEL XP3C
## CHASSIS HS-66202

(Continued from preceding page)

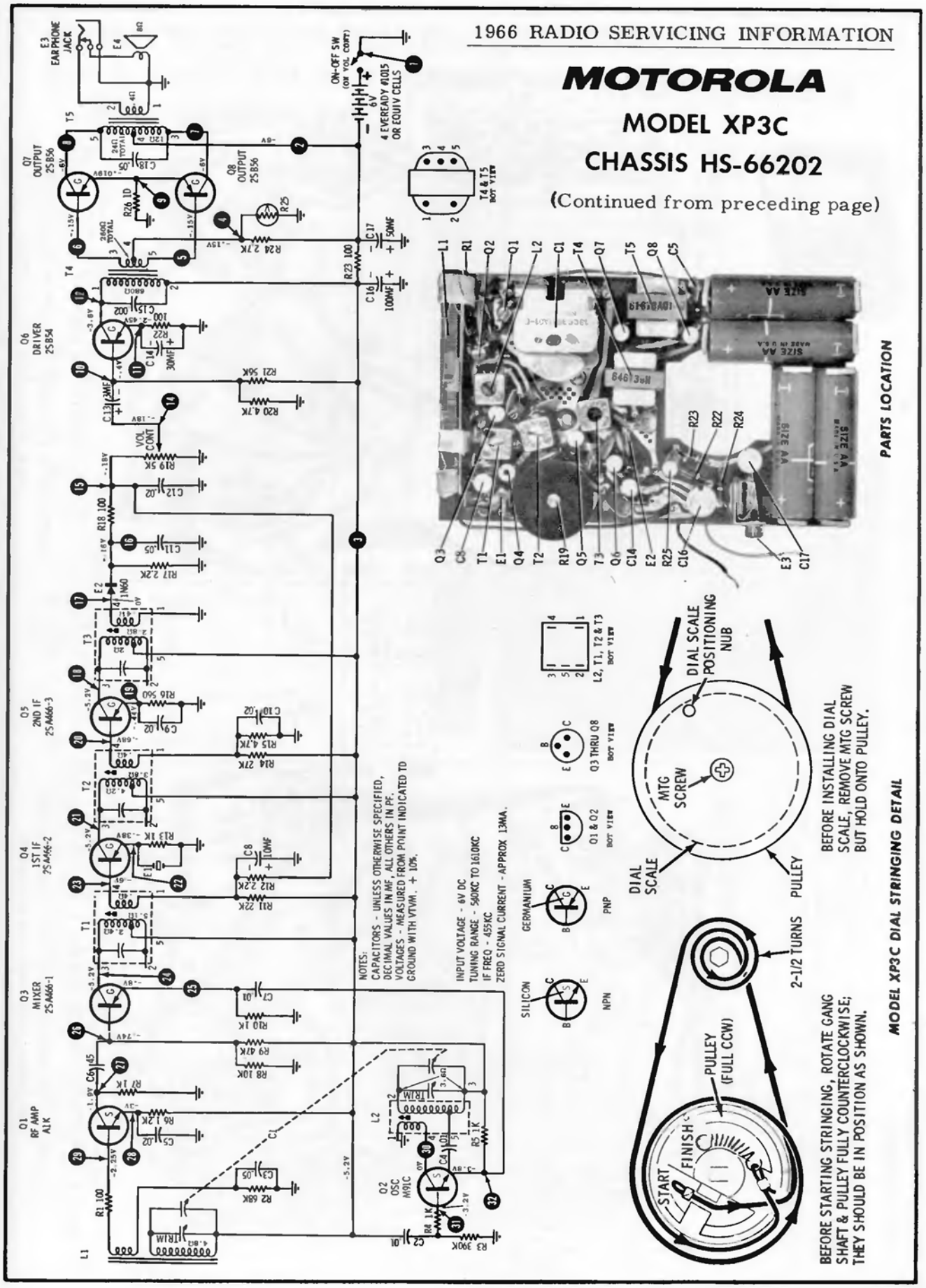





PARTS LOCATION




BEFORE INSTALLING DIAL SCALE, REMOVE MTG SCREW BUT HOLD ONTO PULLEY.




BEFORE STARTING STRINGING, ROTATE GANG SHAFT & PULLEY FULLY COUNTERCLOCKWISE; THEY SHOULD BE IN POSITION AS SHOWN.

MODEL XP3C DIAL STRINGING DETAIL

## CHASSIS REMOVAL

1. From front of radio, remove two (2) control knobs and dial scale.

2. From rear of radio, open back panel by unsnapping the three (3) tabs at top of panel.

3. Remove two (2) screws holding ferrite antenna from sides of radio.

4. Remove six (6) chassis mounting screws. If necessary, unsolder leads connected to chassis before removing chassis from cabinet.

5. If it becomes necessary to remove the earphone jack or power jack, use tool, Motorola Part No. 66A646211.

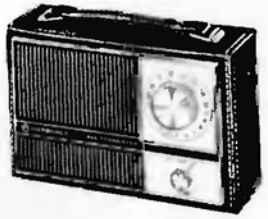

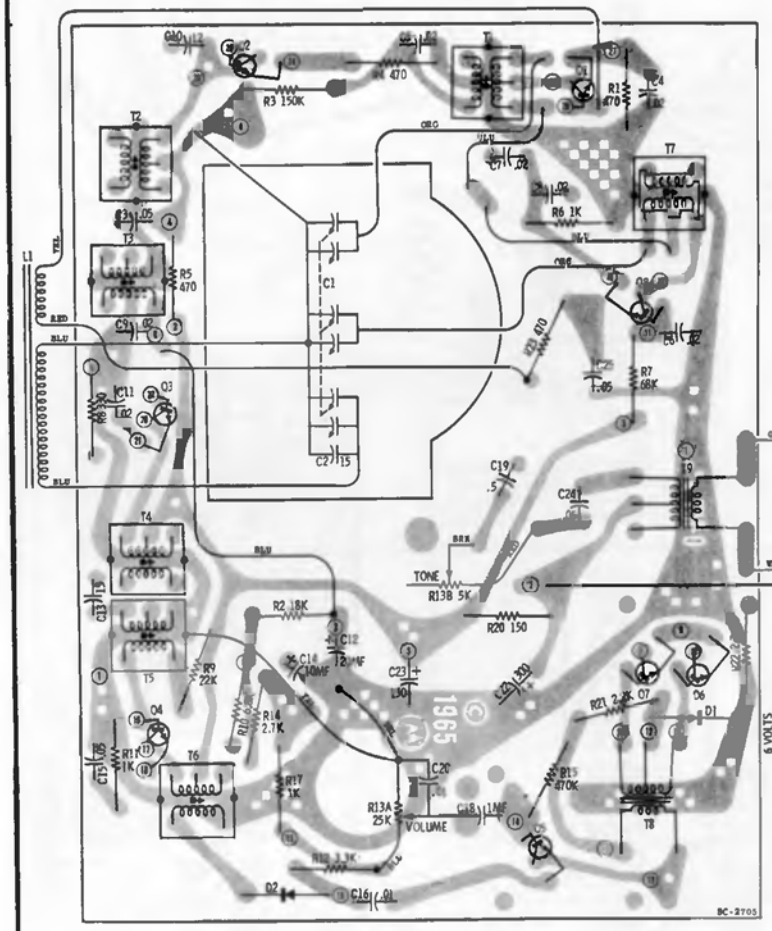


**TOP VIEW**

*PLATED CHASSIS REFERENCE POINTS AND PARTS LOCATION*

(VIEW FROM COMPONENT SIDE OF BOARD)

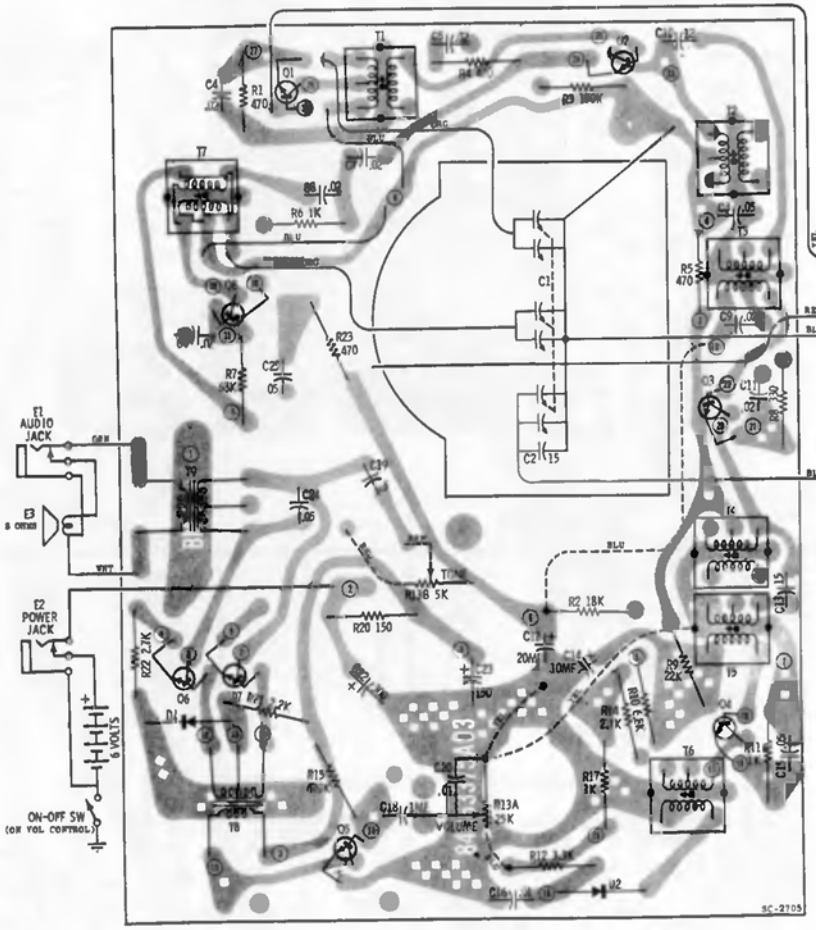


**BOTTOM VIEW**

*PLATED CHASSIS REFERENCE POINTS AND PARTS LOCATION*

(VIEW FROM WIRING SIDE OF BOARD)

# MOTOROLA

## MODEL XP7C
## CHASSIS HS-66206

(For service data on plated chassis and parts locations see preceding page at left)

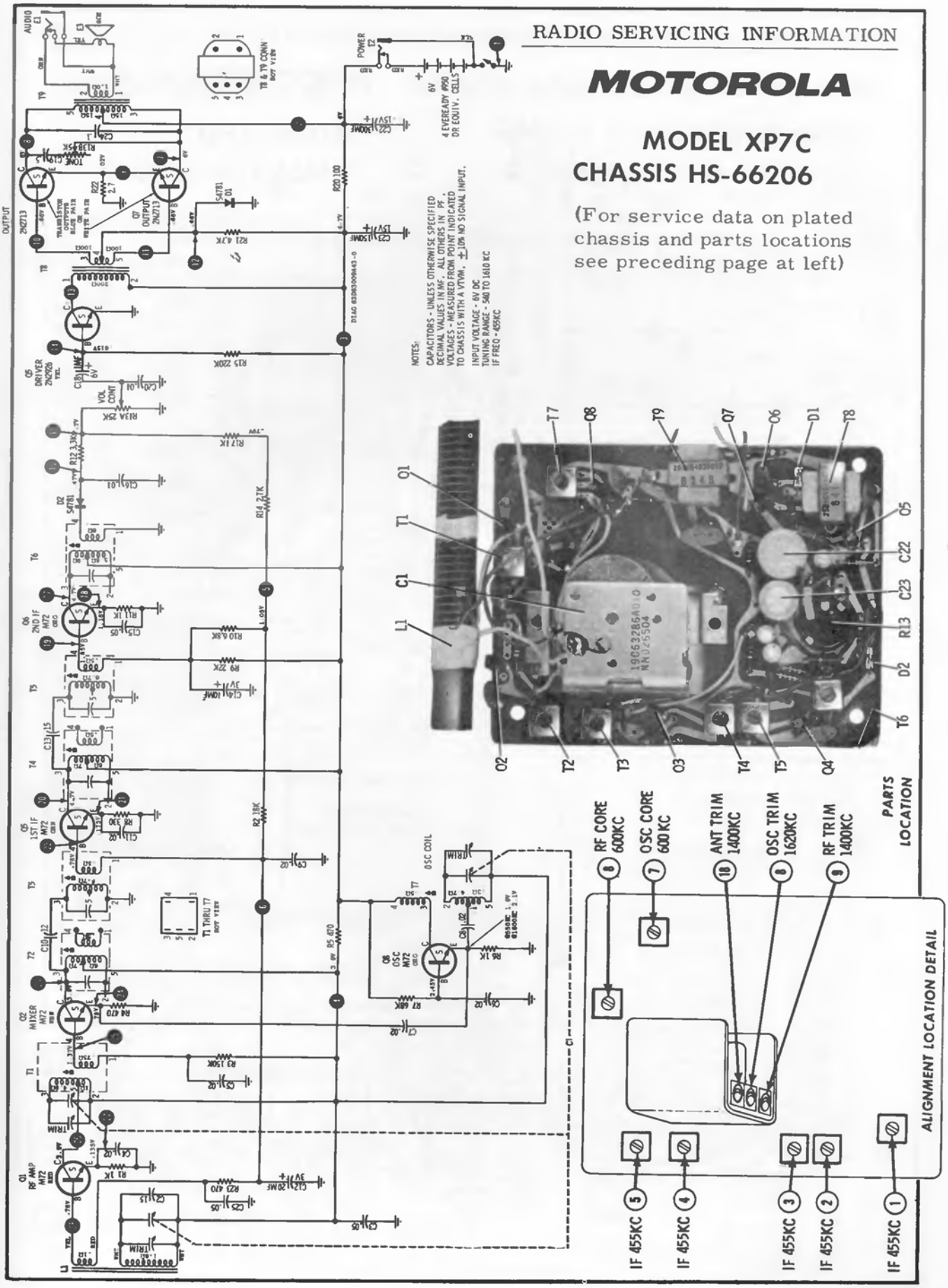

# MOTOROLA

## MODEL XP2C
## CHASSIS HS-66201

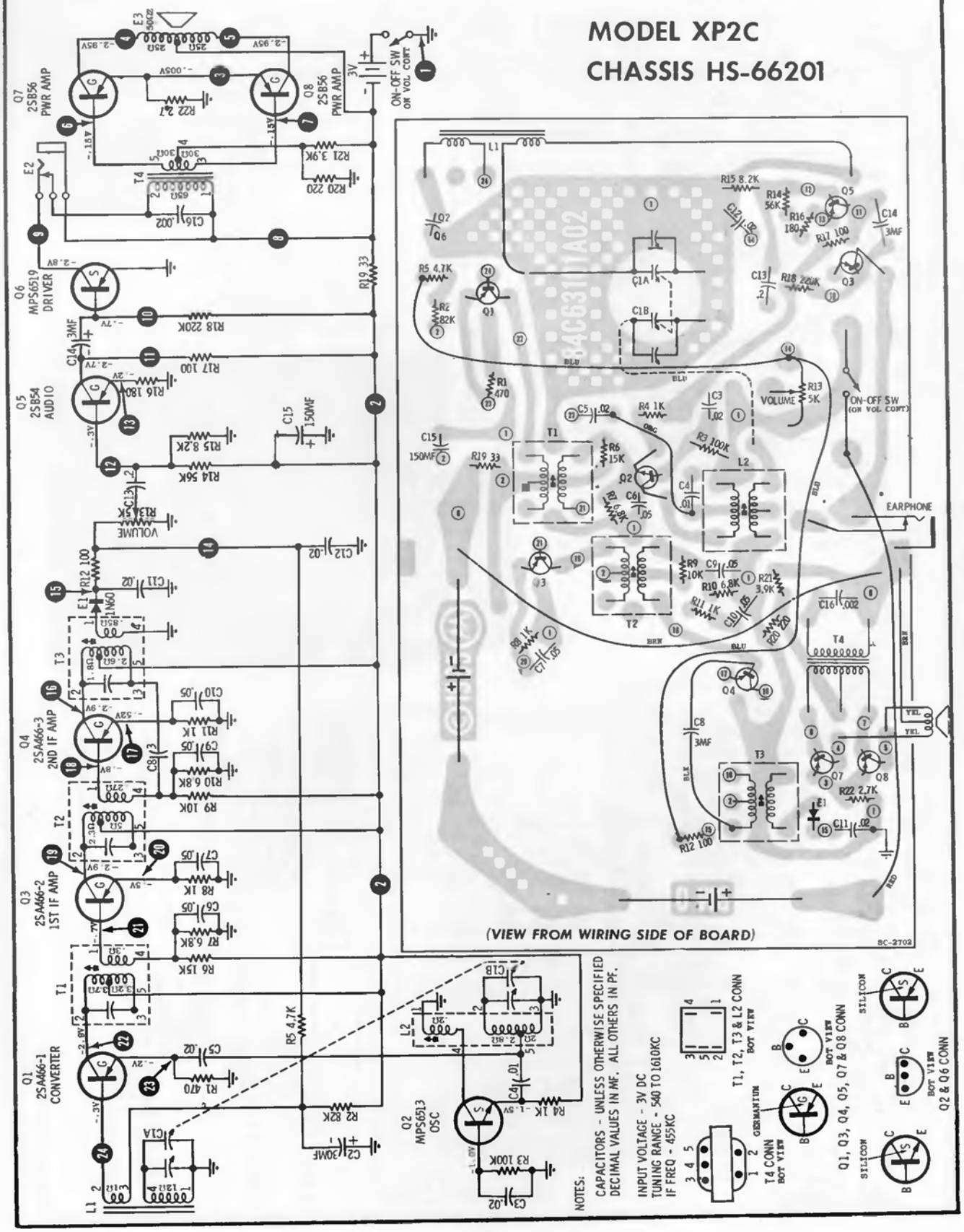

# MOTOROLA

## MODELS AC4B, AC43B, AT30B, AT31B
## CHASSIS HS-67201 & HS-68202

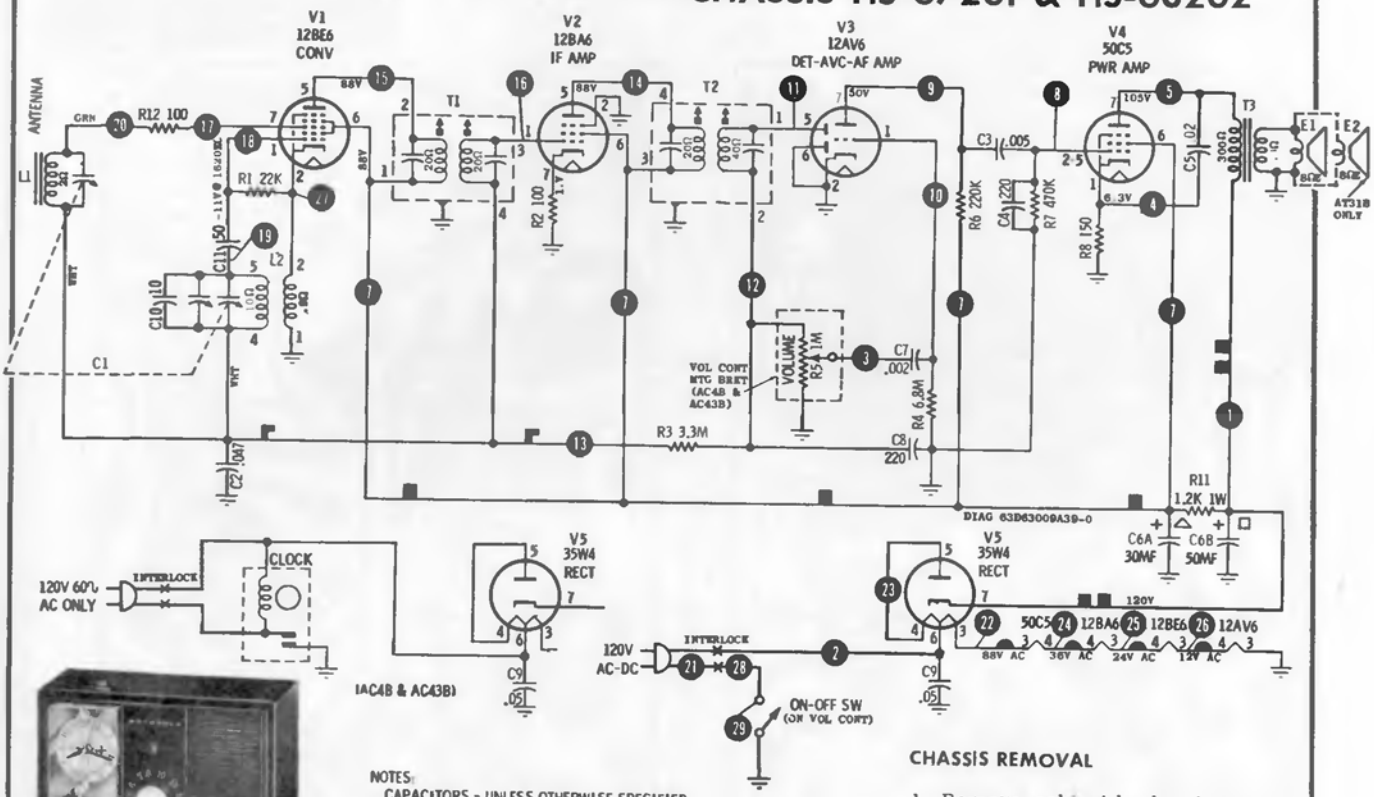

MODEL AC43B

MODEL AT31B

NOTES:
CAPACITORS - UNLESS OTHERWISE SPECIFIED, DECIMAL VALUES IN MF, ALL OTHERS IN PF.
RESISTORS - 1/2 WATT FIXED COMPOSITION, 20% UNLESS OTHERWISE SPECIFIED.
VOLTAGES - MEASURED FROM POINT INDICATED TO CHASSIS WITH A VTVM. ± 10% NO SIGNAL INPUT
TUNING RANGE - 535KC TO 1620KC (IF-455KC)

BOARD WIRING LEGEND
= B+ = AVC = FIL = B−

### CHASSIS REMOVAL

1. Remove cabinet back - 4 screws hold it in place.

2. Remove chassis mounting screw at base of chassis and screw at tuning gang mounting bracket.

3. Pull off volume knob ONLY. (Do not pull captivated tuning knob.)

4. Unsolder appropriate leads to slide chassis out of tuning knob and cabinet.

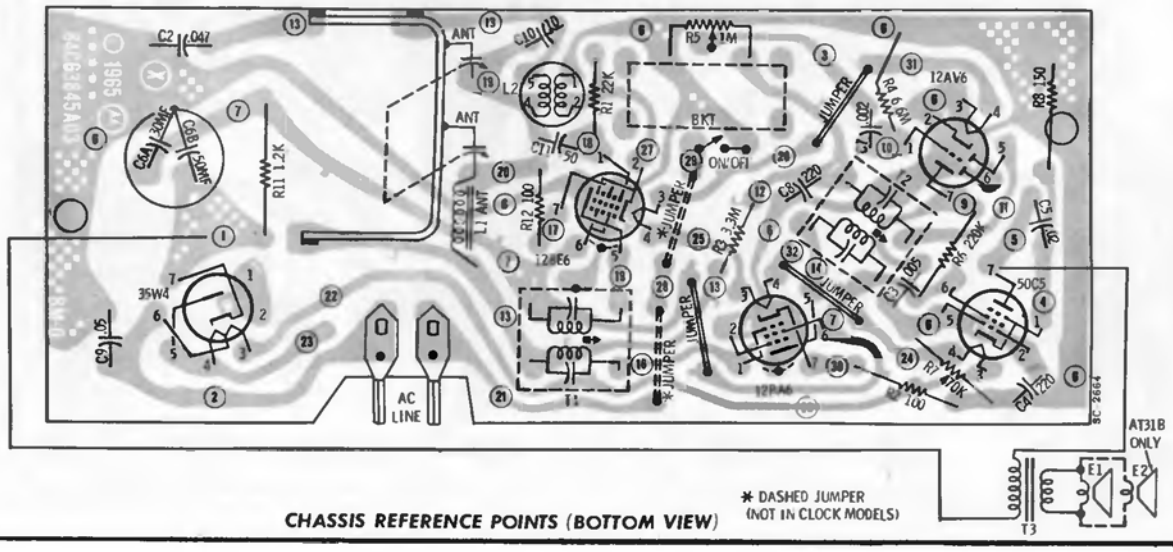


CHASSIS REFERENCE POINTS (BOTTOM VIEW)

* DASHED JUMPER (NOT IN CLOCK MODELS)

# MOTOROLA MODEL TM5A

(Diagram and other data on the next page at right)

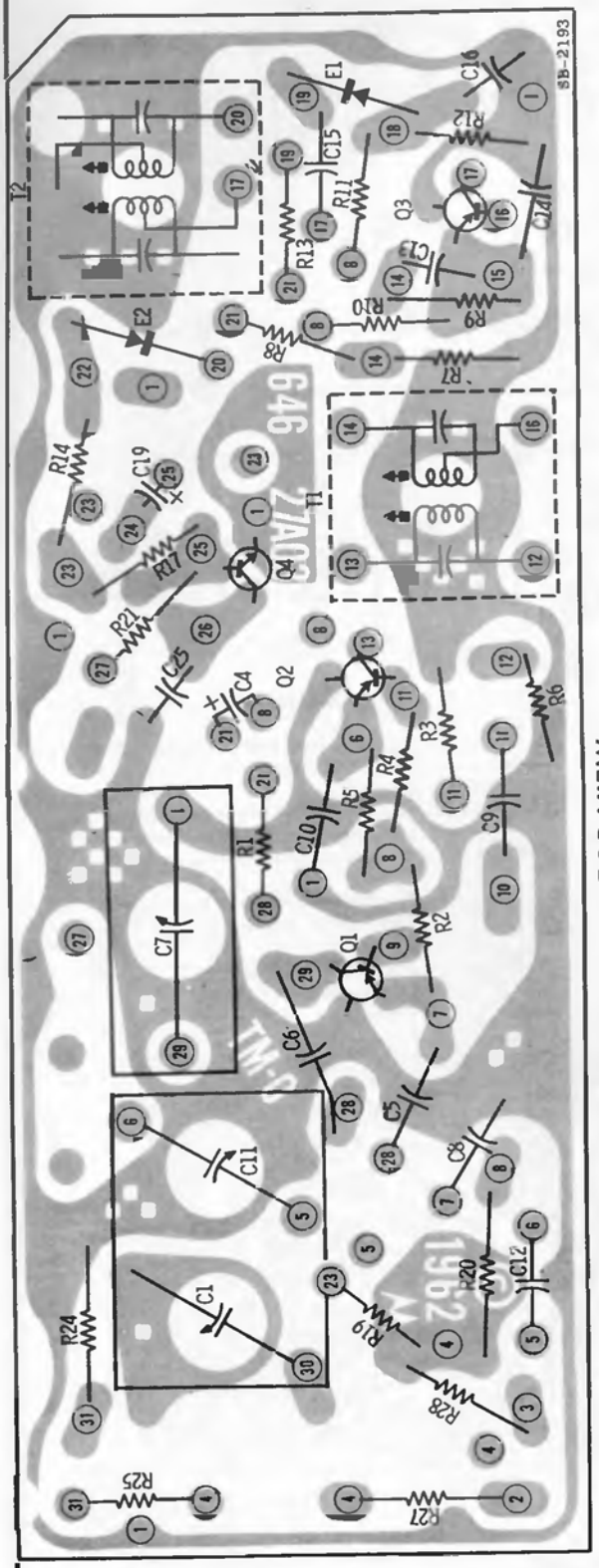


TOP VIEW

PLATED CHASSIS BOARD WIRING (AS VIEWED FROM COMPONENT SIDE)

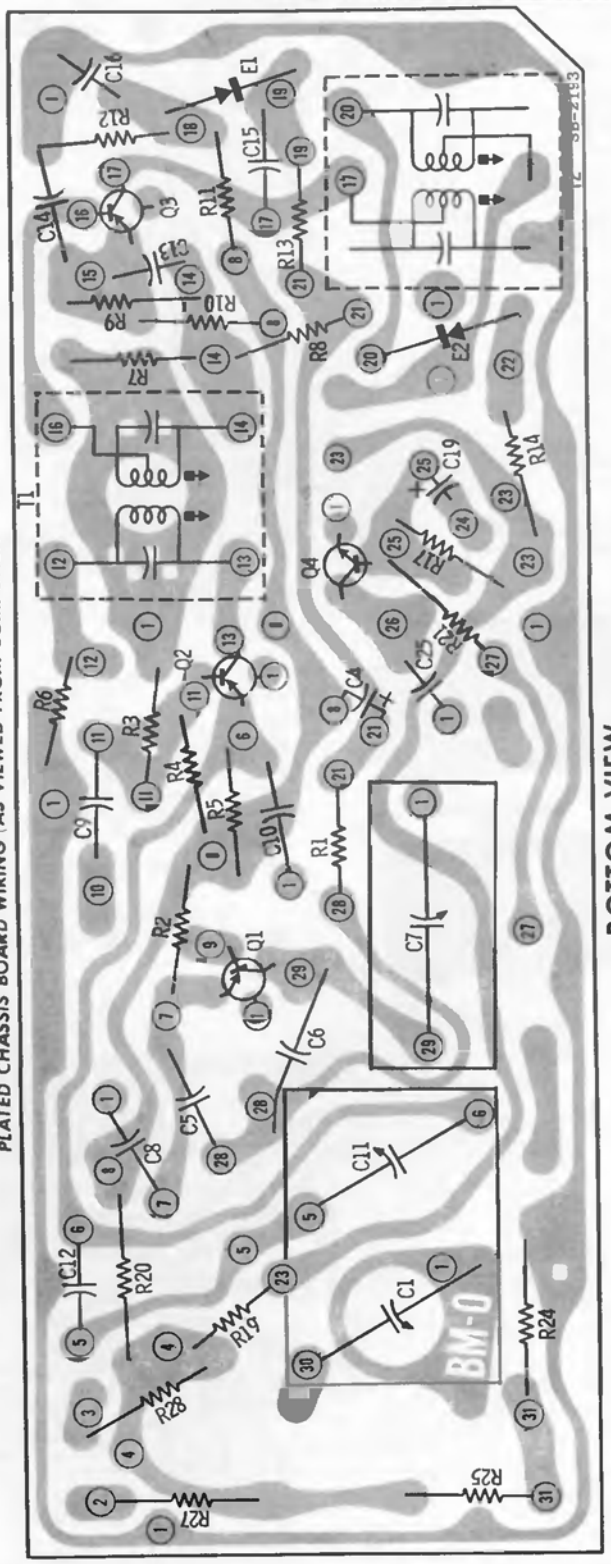


BOTTOM VIEW

PLATED CHASSIS BOARD WIRING AS VIEWED FROM BOTTOM (COMPONENTS SHOWN ARE LOCATED ON OPPOSITE SIDE)

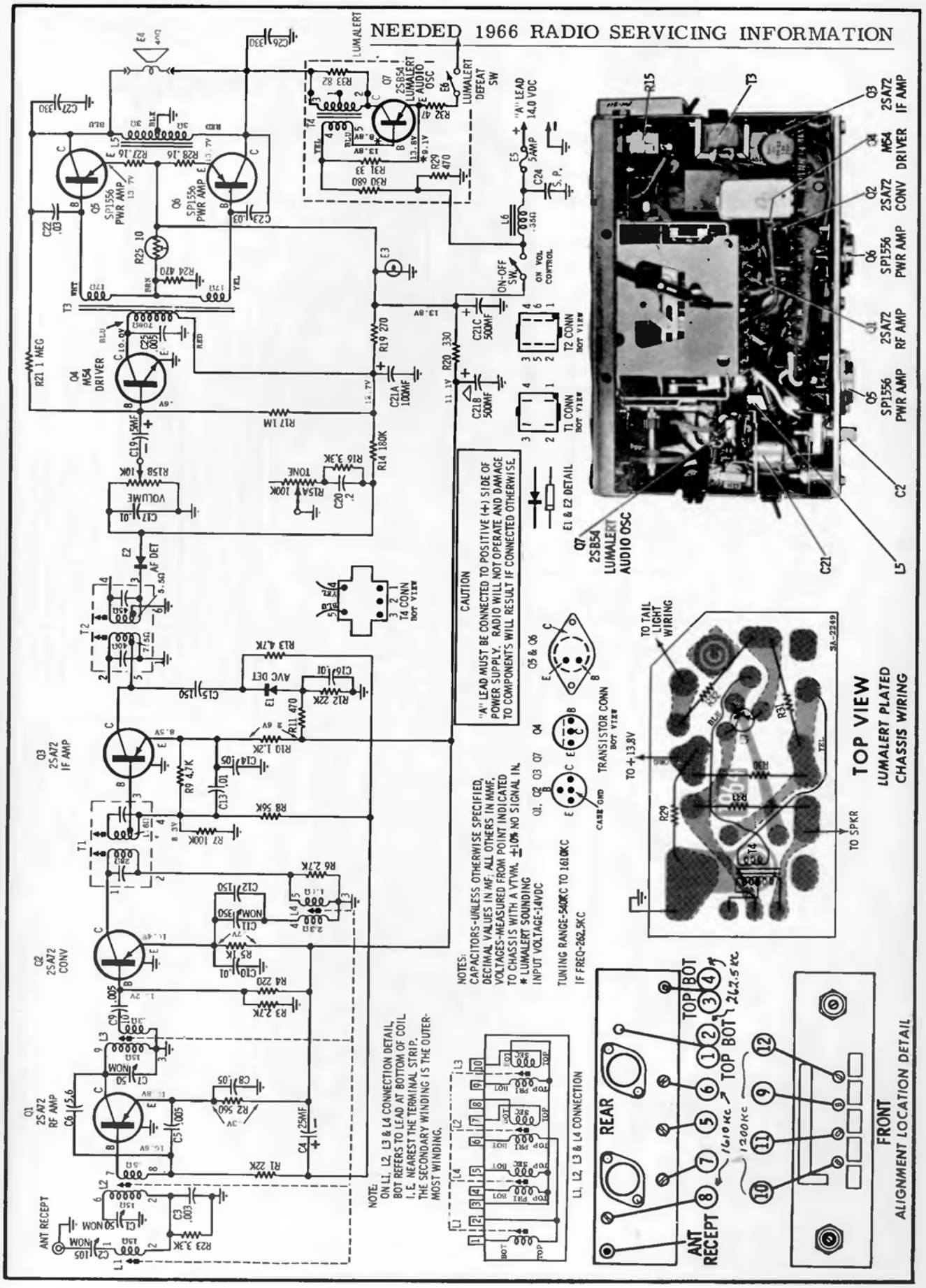
CAUTION
"A" LEAD MUST BE CONNECTED TO POSITIVE (+) SIDE OF POWER SUPPLY. RADIO WILL NOT OPERATE AND DAMAGE TO COMPONENTS WILL RESULT IF CONNECTED OTHERWISE.
NOTES:
CAPACITORS-UNLESS OTHERWISE SPECIFIED, DECIMAL VALUES IN MF; ALL OTHERS IN MMF.
VOLTAGES-MEASURED FROM POINT INDICATED TO CHASSIS WITH A VTVM. ±10% NO SIGNAL IN.
* LUMALERT SOUNDING
INPUT VOLTAGE-14VDC
TUNING RANGE-540KC TO 1610KC
IF FREQ-262.5KC
NOTE:
ON L1, L2, L3 & L4 CONNECTION DETAIL, BOT REFERS TO LEAD AT BOTTOM OF COIL I.E. NEAREST THE TERMINAL STRIP. THE SECONDARY WINDING IS THE OUTERMOST WINDING.
L1, L2, L3 & L4 CONNECTION
TOP VIEW
LUMALERT PLATED CHASSIS WIRING
REAR
FRONT
ALIGNMENT LOCATION DETAIL
ANT RECEPT
Q7 2SB54 LUMALERT AUDIO OSC
Q3 2SA72 IF AMP
Q4 M54 DRIVER
Q2 2SA72 CONV
Q6 SP1556 PWR AMP
Q1 2SA72 RF AMP
Q5 SP1556 PWR AMP
C2
C21
L5
R15
T3
TO TAIL LIGHT WIRING
TO +13.8V
TO SPKR
TRANSISTOR CONN BOT VIEW
T1 CONN BOT VIEW
T2 CONN BOT VIEW
T4 CONN BOT VIEW
E1 & E2 DETAIL
LUMALERT
LUMALERT DEFEAT SW
"A" LEAD 14.0 VDC
ON-OFF SW
ON VOL CONTROL
VOLUME
TONE
AF DET
AVC DET
ANT RECEPT
TOP BOT
262.5KC
1610KC
1200KC

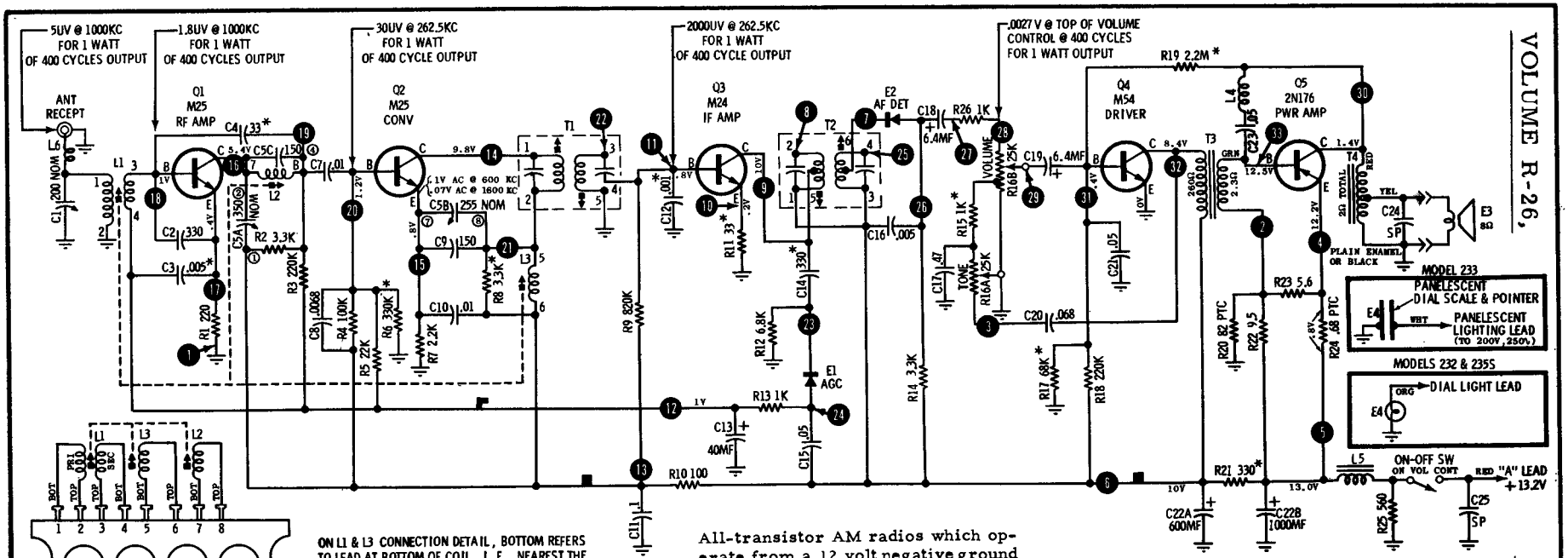


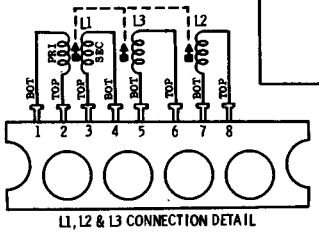


L1, L2 & L3 CONNECTION DETAIL

ON L1 & L3 CONNECTION DETAIL, BOTTOM REFERS TO LEAD AT BOTTOM OF COIL. I. E., NEAREST THE TERMINAL STRIP. THE SECONDARY WINDING IS THE OUTERMOST WINDING.

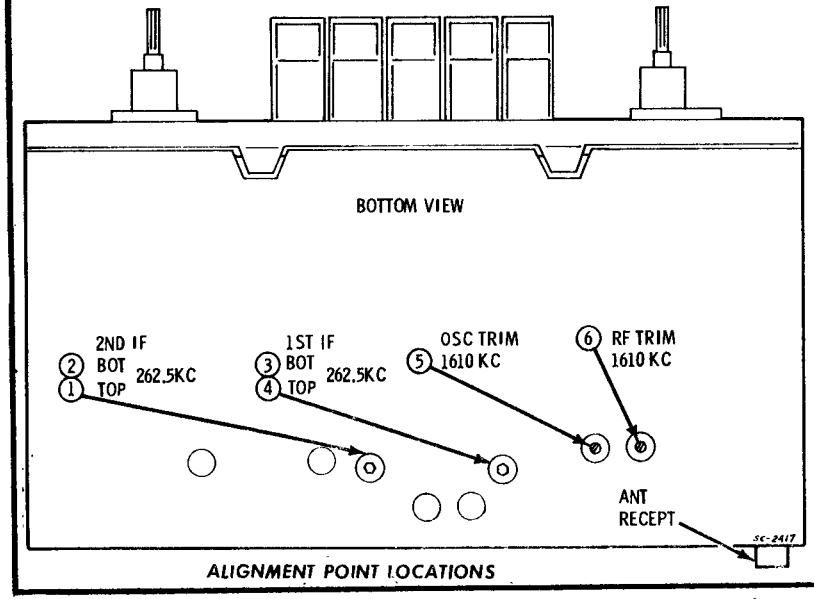


*ALIGNMENT POINT LOCATIONS*

All-transistor AM radios which operate from a 12 volt negative ground system. These radios are designed for custom installation in the following cars:

Model 232 - 1966 Dodge Coronet, BW1 and BW2.

Model 233 - 1966 Dodge Charger, BW29.

Model 235S - 1966 Dodge Polara, Custom 880 and Monaco, BD2.

PLATED CHASSIS BOARD REMOVAL - To remove the plated chassis from the radio housing, proceed as follows:

A. Unsolder the 3 black chassis ground wires from the chassis mounting bracket.

B. Remove the 4 wraparound mounting screws.

C. Straighten the ears on the chassis mounting bracket, then unsolder and remove the chassis mounting bracket. The chassis can then be positioned as desired.

**CAUTION**

"A" LEAD MUST BE CONNECTED TO POSITIVE (+) SIDE OF POWER SUPPLY. RADIO WILL NOT OPERATE AND DAMAGE TO COMPONENTS WILL RESULT IF CONNECTED OTHERWISE.

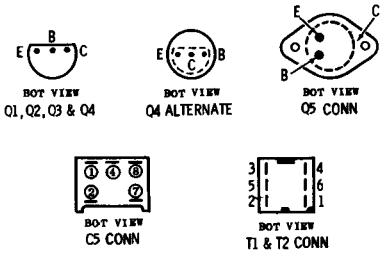


NOTES:
CAPACITOR - UNLESS OTHERWISE SPECIFIED, DECIMAL VALUES IN MF; ALL OTHERS IN PF.
VOLTAGES - MEASURED FROM POINT INDICATED TO GROUND WITH A VTVM ± 10%. NO SIGNAL IN.
INPUT VOLTAGE 13.2V DC
TUNING RANGE - 540KC TO 1610KC
IF FREQ - 262.5KC
*THESE VALUES ARE NOMINAL AND MAY VARY IN PRODUCTION TO MEET SPECIFICATIONS.

■ = B+ ▶ = AVC

# MOTOROLA

## MODELS 232, 233, 235S





(Continued on the next page at right)

# MOTOROLA

## Models 232, 233, 235S

(Continued from preceding page)

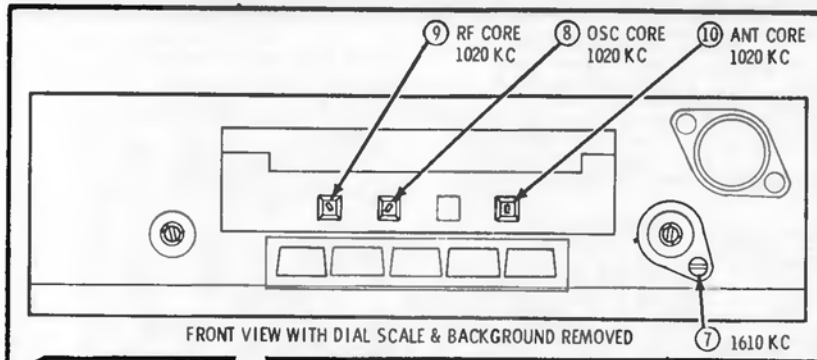


FRONT VIEW WITH DIAL SCALE & BACKGROUND REMOVED

**AVC VOLTAGE CHECKS**

A CHECK FOR PROPER AVC ACTION IN THIS SET CAN BE MADE AS FOLLOWS.

WITH NO INPUT SIGNAL (OR IN-BETWEEN STATIONS) THE DC VOLTAGE FROM THE AVC LINE (12 ON SCHEMATIC) WITH RESPECT TO GROUND SHOULD BE SLIGHTLY POSITIVE (APPROXIMATELY + .85 VOLTS).

WITH AN INPUT SIGNAL, THIS VOLTAGE WILL TEND TO GO NEGATIVE, ITS MAGNITUDE DEPENDING ON SIGNAL STRENGTH.

SOME TYPICAL EXAMPLES ARE SHOWN AT RIGHT.

| INPUT SIGNAL STRENGTH | AVC VOLTAGE DEVELOPED |
|---|---|
| NO SIGNAL (OR IN-BETWEEN STATIONS) | APPROX + .85 VOLTS |
| APPROX 10,000 MICROVOLTS (MEDIUM POWER STATION) | APPROX + .5 VOLTS |
| APPROX 1 VOLT (STRONG STATION) | APPROX - .5 VOLTS |

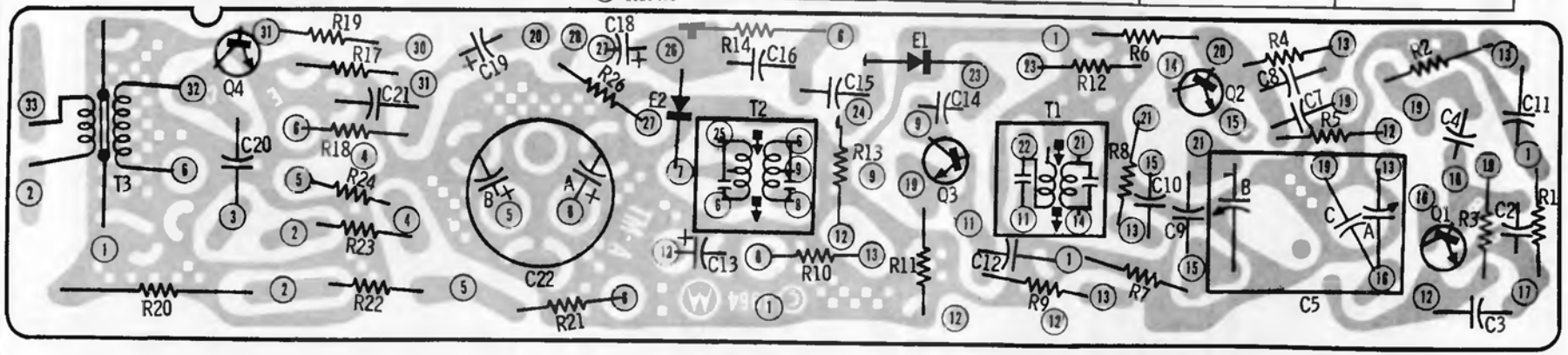


**TOP VIEW**

*PLATED CHASSIS REFERENCE POINTS AND PARTS LOCATION* (VIEW FROM COMPONENT SIDE OF BOARD)

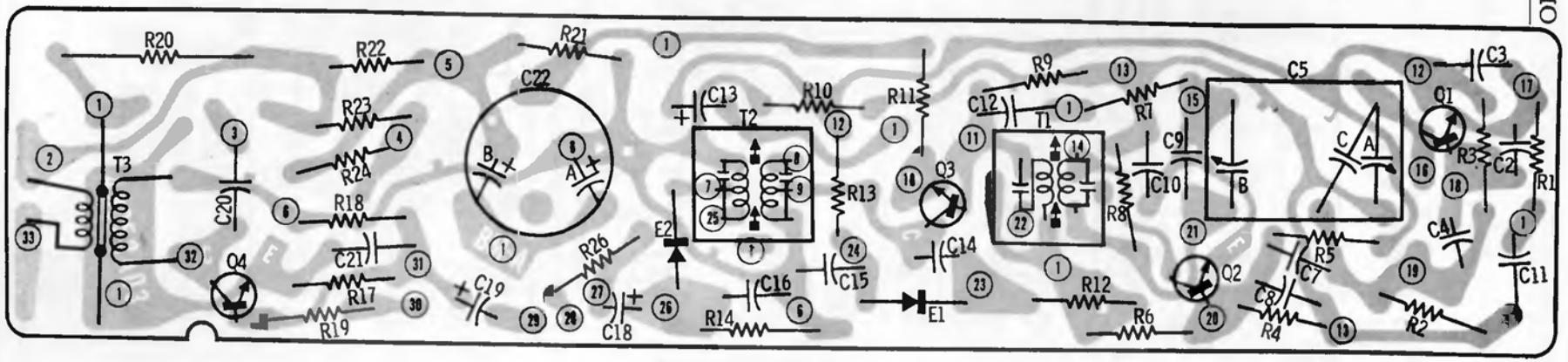


**BOTTOM VIEW**

*PLATED CHASSIS REFERENCE POINTS AND PARTS LOCATION* (VIEW FROM WIRING SIDE OF BOARD)

# MOTOROLA

## MODEL TM295M

(Service material continued on the next page, adjacent at right)

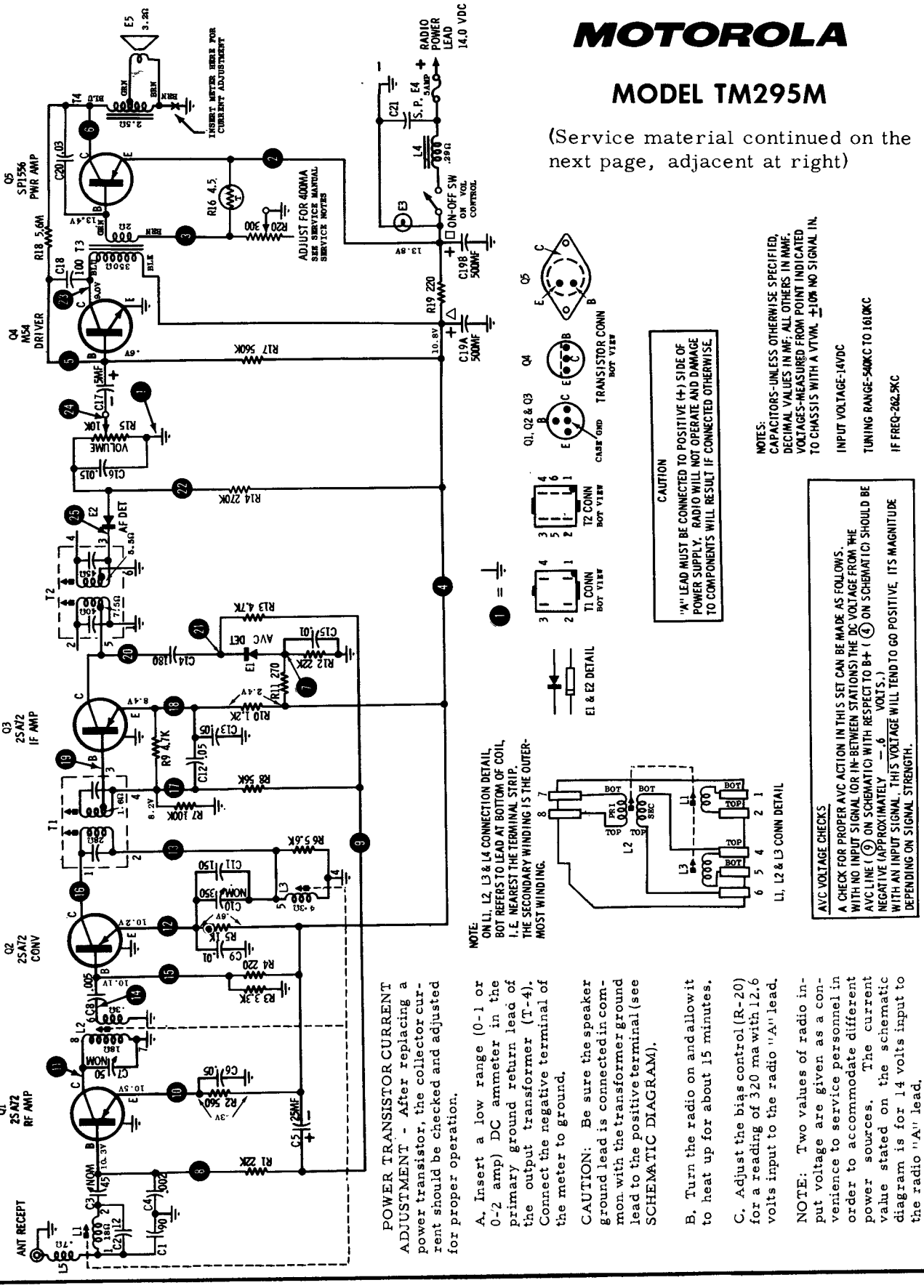


POWER TRANSISTOR CURRENT ADJUSTMENT - After replacing a power transistor, the collector current should be checked and adjusted for proper operation.

A. Insert a low range (0-1 or 0-2 amp) DC ammeter in the primary ground return lead of the output transformer (T-4). Connect the negative terminal of the meter to ground.

CAUTION: Be sure the speaker ground lead is connected in common with the transformer ground lead to the positive terminal (see SCHEMATIC DIAGRAM).

B. Turn the radio on and allow it to heat up for about 15 minutes.

C. Adjust the bias control (R-20) for a reading of 320 ma with 12.6 volts input to the radio "A" lead.

NOTE: Two values of radio input voltage are given as a convenience to service personnel in order to accommodate different power sources. The current value stated on the schematic diagram is for 14 volts input to the radio "A" lead.

# MOTOROLA

## MODEL TM295M

(Continued from preceding page at left)

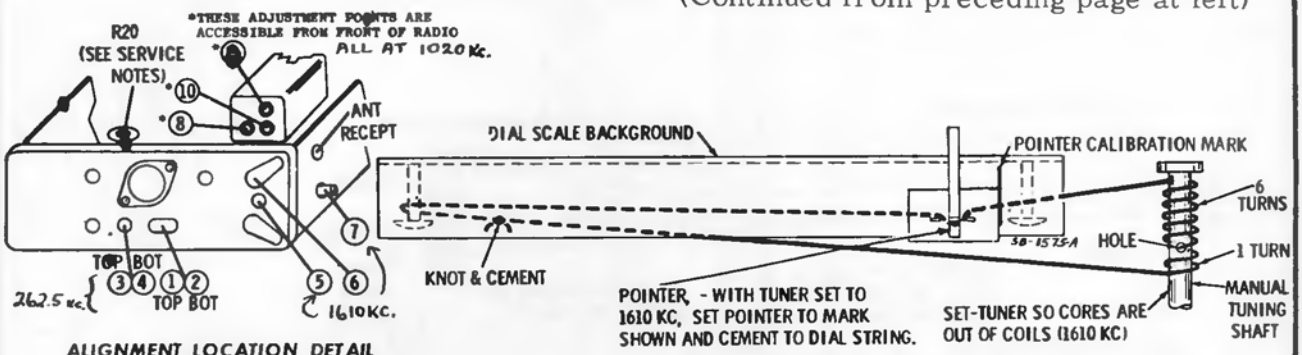


ALIGNMENT LOCATION DETAIL

DIAL STRINGING DETAIL

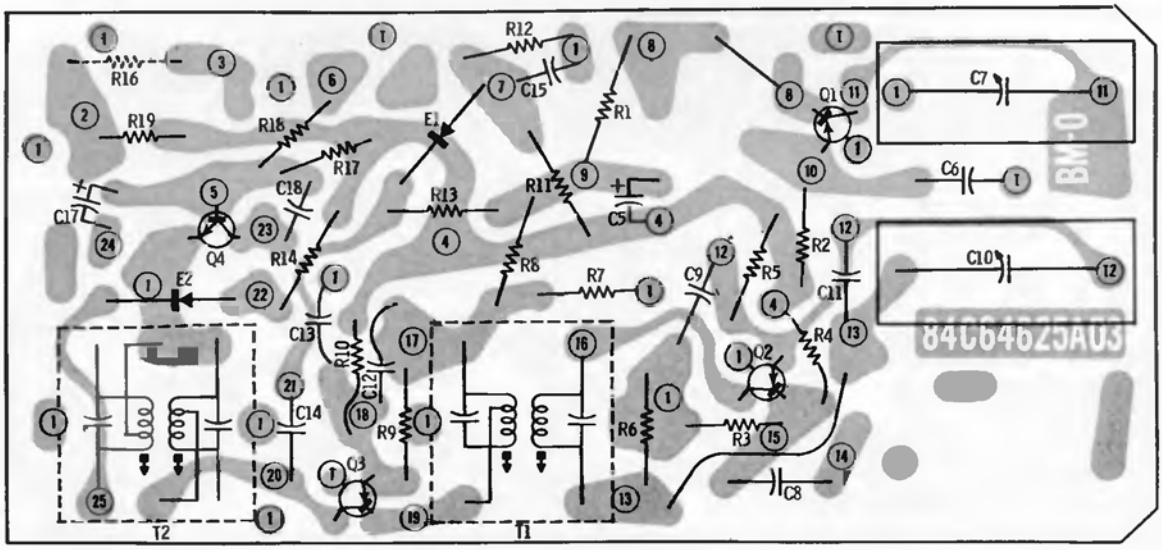


**BOTTOM VIEW**

*PLATED CHASSIS REFERENCE POINTS AND PARTS LOCATION (VIEW FROM WIRING SIDE OF BOARD)*

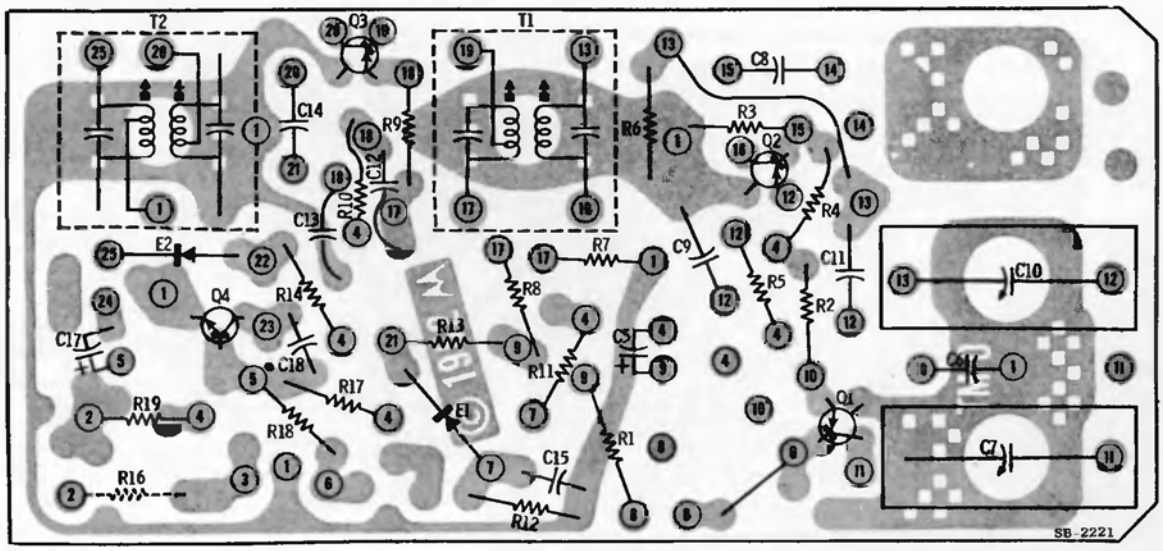


**TOP VIEW**

*PLATED CHASSIS REFERENCE POINTS AND PARTS LOCATION (VIEW FROM COMPONENT SIDE OF BOARD)*

# MOTOROLA MODEL TM296M

(Diagram and other data on the next page adjacent at right)

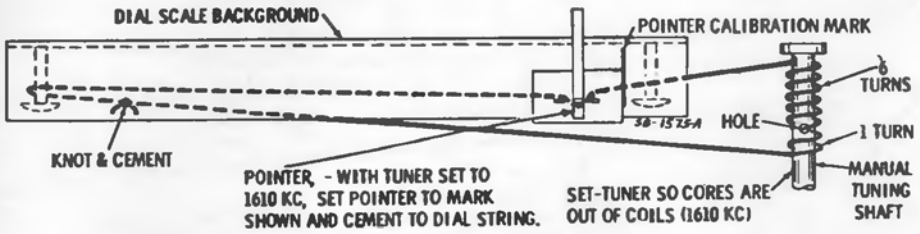


*DIAL STRINGING DETAIL*

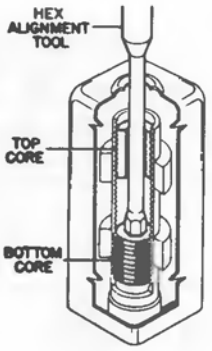


*IF ALIGNMENT DETAIL*

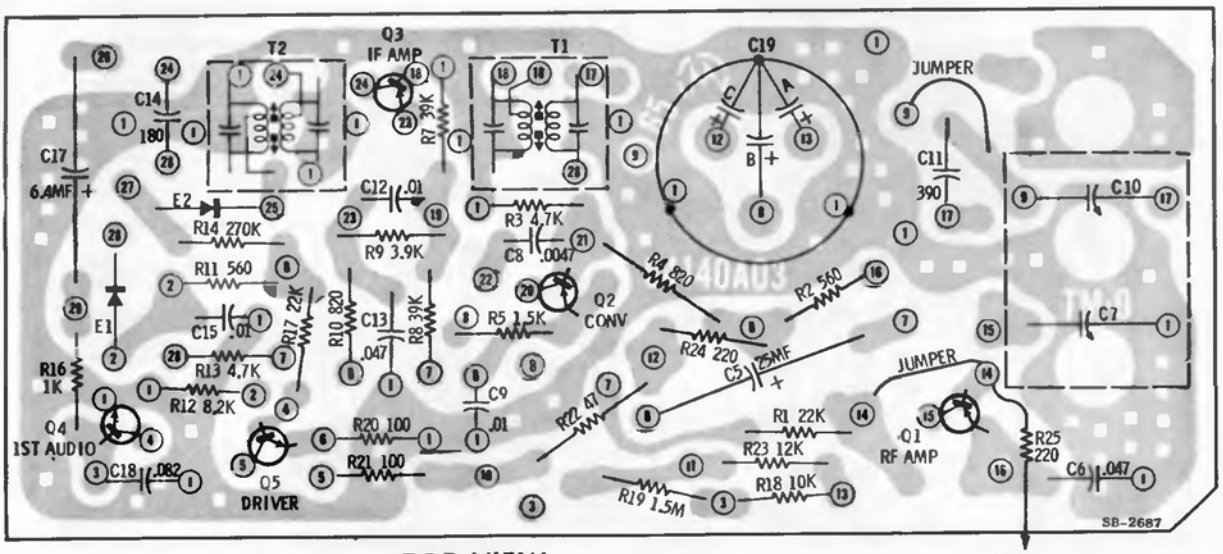


**TOP VIEW**

TO C3 - C4

*PLATED CHASSIS REFERENCE POINTS AND PARTS LOCATION* (VIEW FROM COMPONENT SIDE OF BOARD)

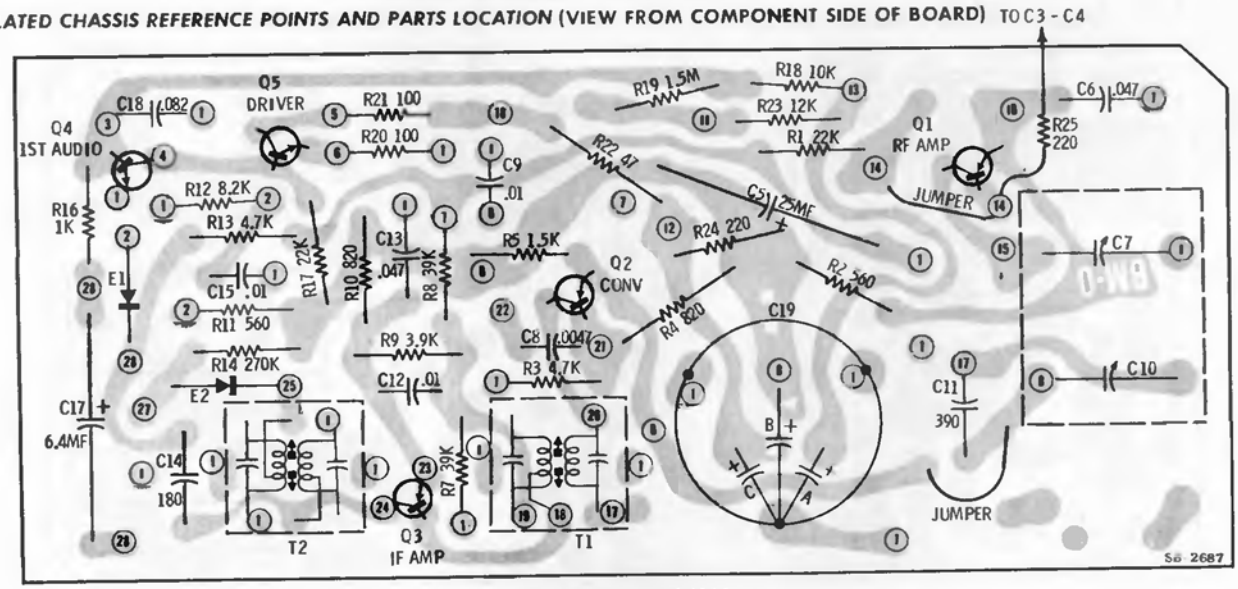


**BOTTOM VIEW**

*PLATED CHASSIS REFERENCE POINTS AND PARTS LOCATION* (VIEW FROM WIRING SIDE OF BOARD)

# MOTOROLA

## MODEL TM296M

(Continued from preceding page)

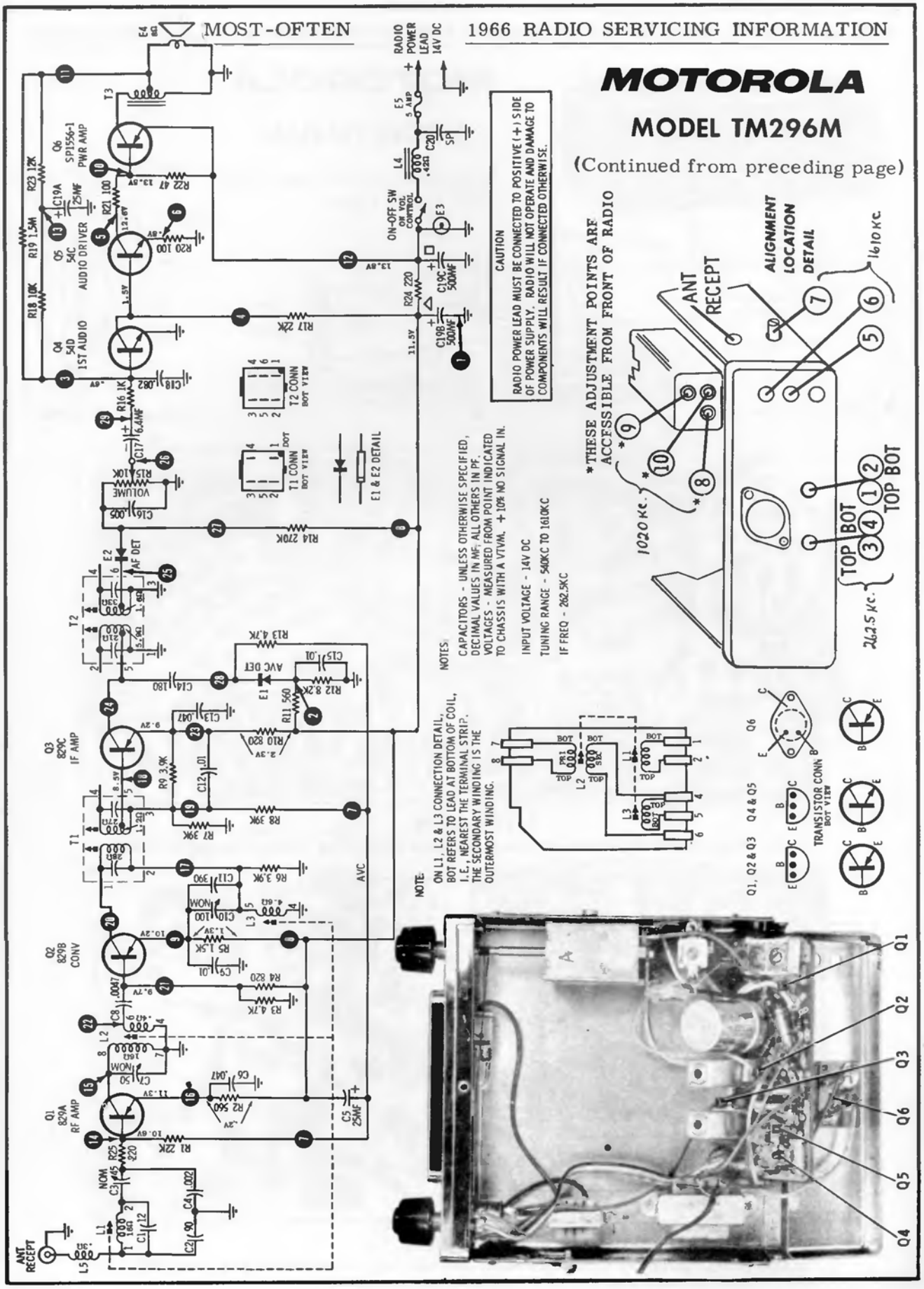


PARTS LOCATION

# MOTOROLA

## MODEL TM316M

(Continued on the next page adjacent at right)

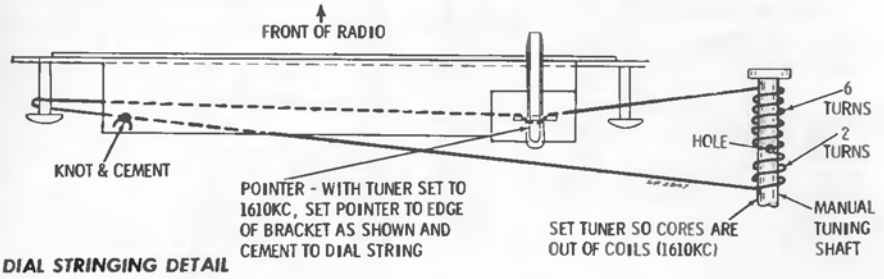


*DIAL STRINGING DETAIL*

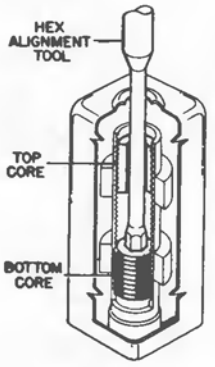


*IF ALIGNMENT DETAIL*

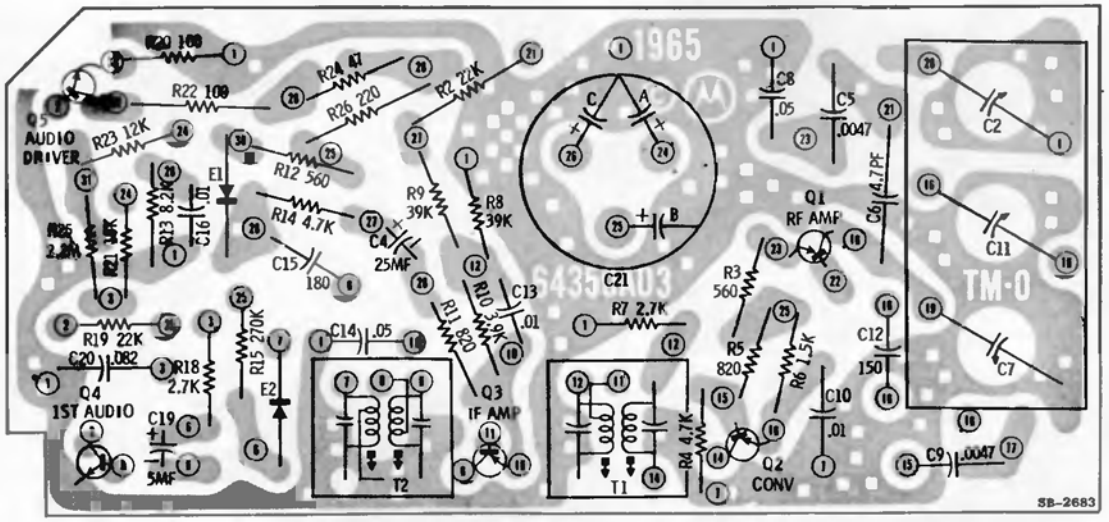


**TOP VIEW**

***PLATED CHASSIS REFERENCE POINTS AND PARTS LOCATION* (VIEW FROM COMPONENT SIDE OF BOARD)**

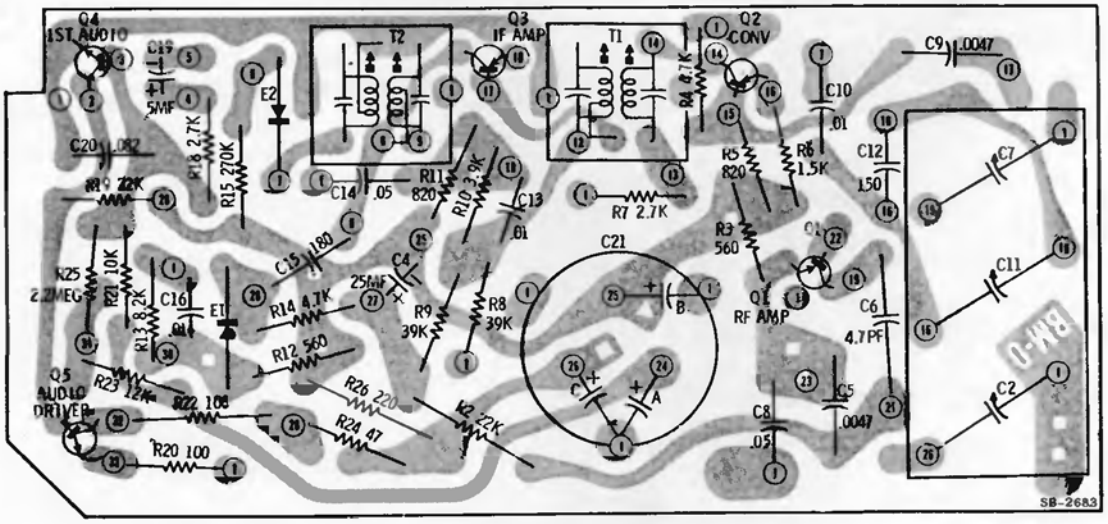


**BOTTOM VIEW**

***PLATED CHASSIS REFERENCE POINTS AND PARTS LOCATION* (VIEW FROM WIRING SIDE OF BOARD)**

# MOTOROLA

## MODEL TM316M

(Continued from preceding page)

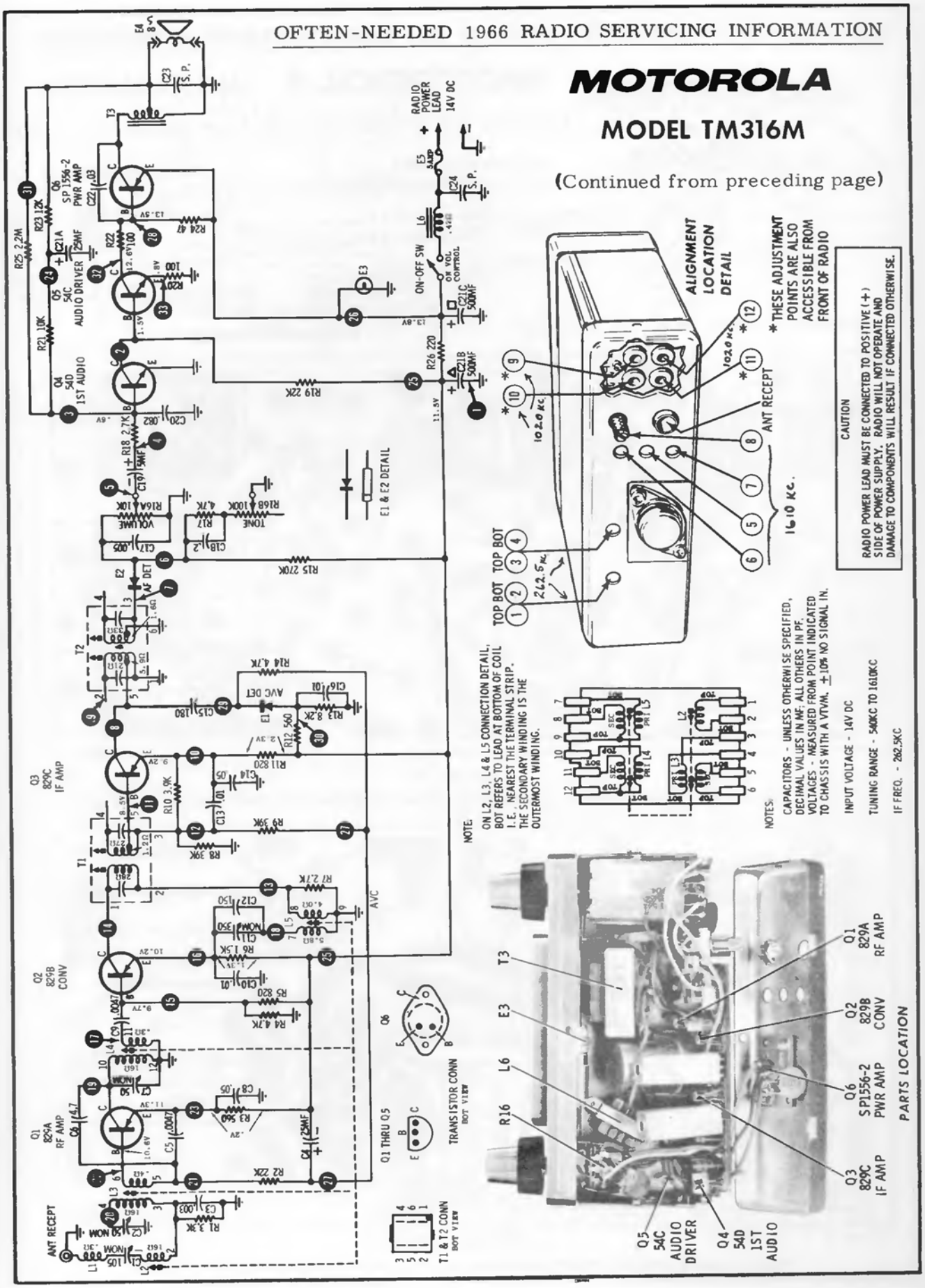

# MOTOROLA MODEL TM325M

(Diagram and other data on next page adjacent at right)

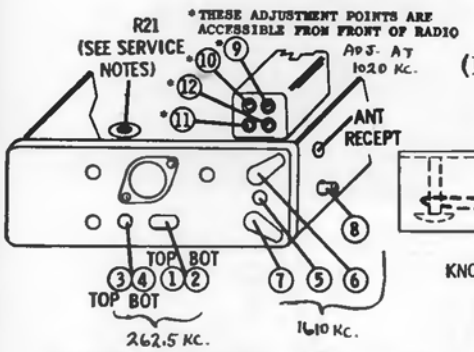


ALIGNMENT LOCATION DETAIL

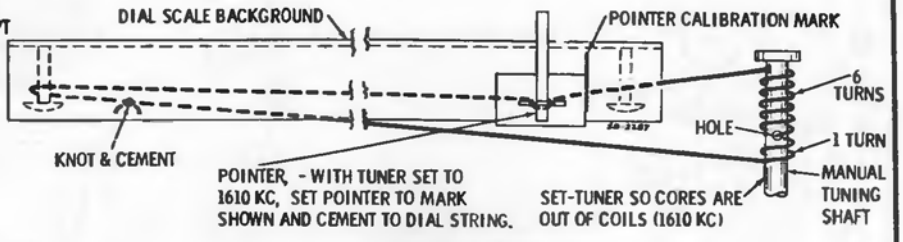


DIAL STRINGING DETAIL

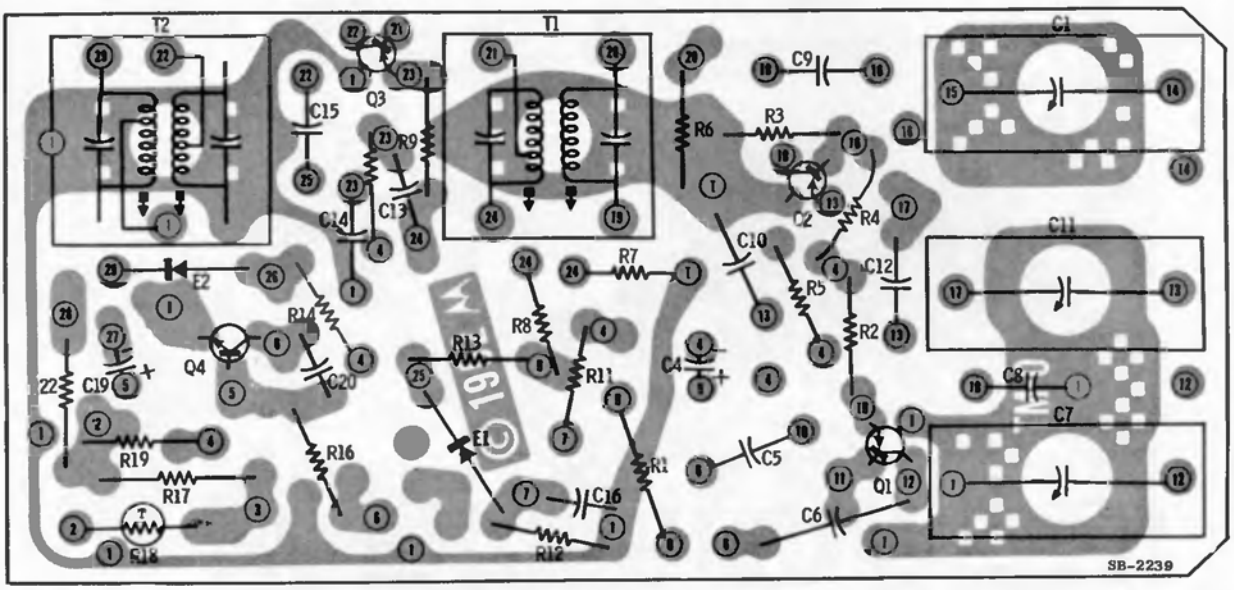


TOP VIEW

PLATED CHASSIS REFERENCE POINTS AND PARTS LOCATION (VIEW FROM COMPONENT SIDE OF BOARD)

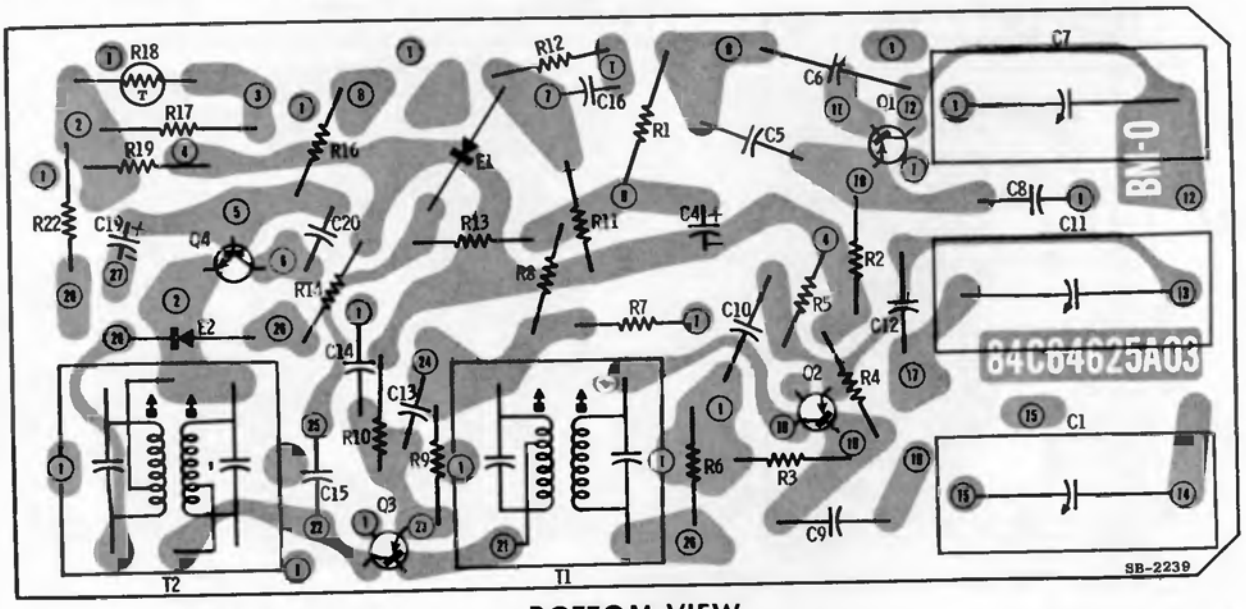


BOTTOM VIEW

PLATED CHASSIS REFERENCE POINTS AND PARTS LOCATION (VIEW FROM WIRING SIDE OF BOARD)

# MOTOROLA

## MODEL TM325M

(Continued from preceding page)

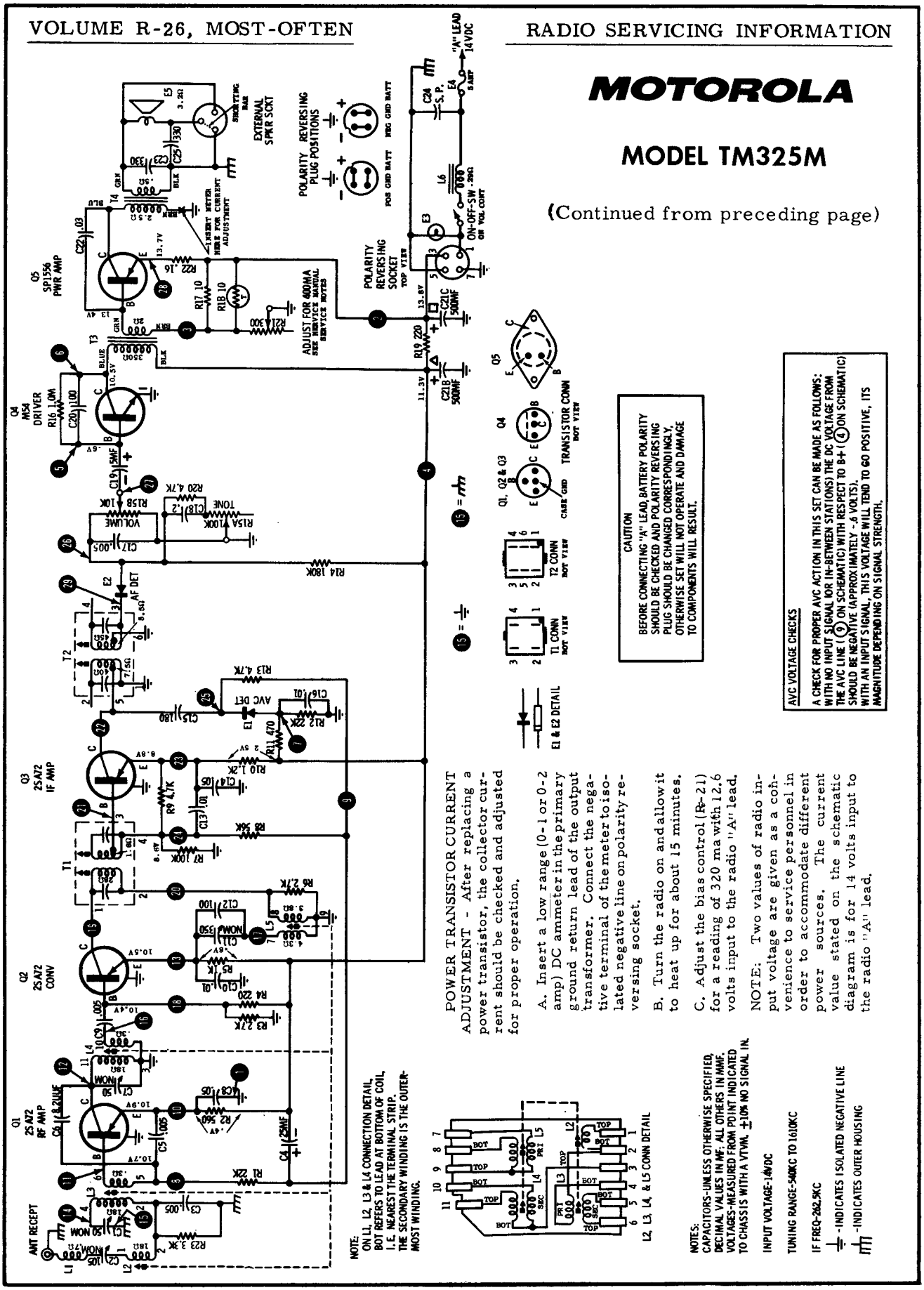


POWER TRANSISTOR CURRENT ADJUSTMENT - After replacing a power transistor, the collector current should be checked and adjusted for proper operation.

A. Insert a low range (0-1 or 0-2 amp) DC ammeter in the primary ground return lead of the output transformer. Connect the negative terminal of the meter to isolated negative line on polarity reversing socket.

B. Turn the radio on and allow it to heat up for about 15 minutes.

C. Adjust the bias control (R8-21) for a reading of 320 ma with 12.6 volts input to the radio "A" lead.

NOTE: Two values of radio input voltage are given as a convenience to service personnel in order to accommodate different power sources. The current value stated on the schematic diagram is for 14 volts input to the radio "A" lead.

**CAUTION**

BEFORE CONNECTING "A" LEAD, BATTERY POLARITY SHOULD BE CHECKED AND POLARITY REVERSING PLUG SHOULD BE CHANGED CORRESPONDINGLY, OTHERWISE SET WILL NOT OPERATE AND DAMAGE TO COMPONENTS WILL RESULT.

**AVC VOLTAGE CHECKS**

A CHECK FOR PROPER AVC ACTION IN THIS SET CAN BE MADE AS FOLLOWS: WITH NO INPUT SIGNAL (OR IN-BETWEEN STATIONS) THE DC VOLTAGE FROM THE AVC LINE (9) ON SCHEMATIC) WITH RESPECT TO B+ ((4) ON SCHEMATIC) SHOULD BE NEGATIVE (APPROXIMATELY -6 VOLTS). WITH AN INPUT SIGNAL, THIS VOLTAGE WILL TEND TO GO POSITIVE, ITS MAGNITUDE DEPENDING ON SIGNAL STRENGTH.

# MOTOROLA MODEL TM326M

(Diagram and other data on the next page adjacent at right)

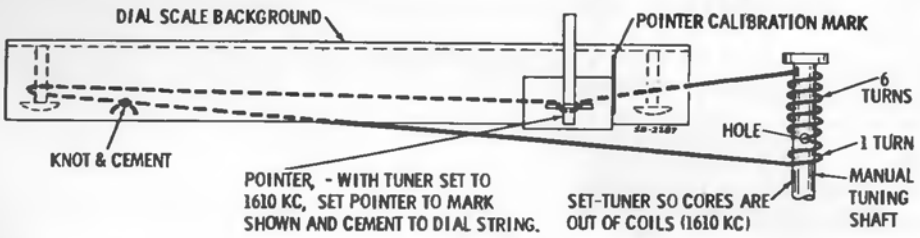


*DIAL STRINGING DETAIL*

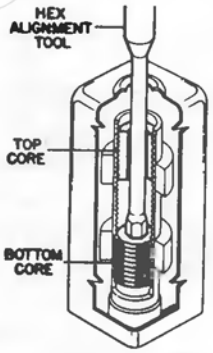


*IF ALIGNMENT DETAIL*

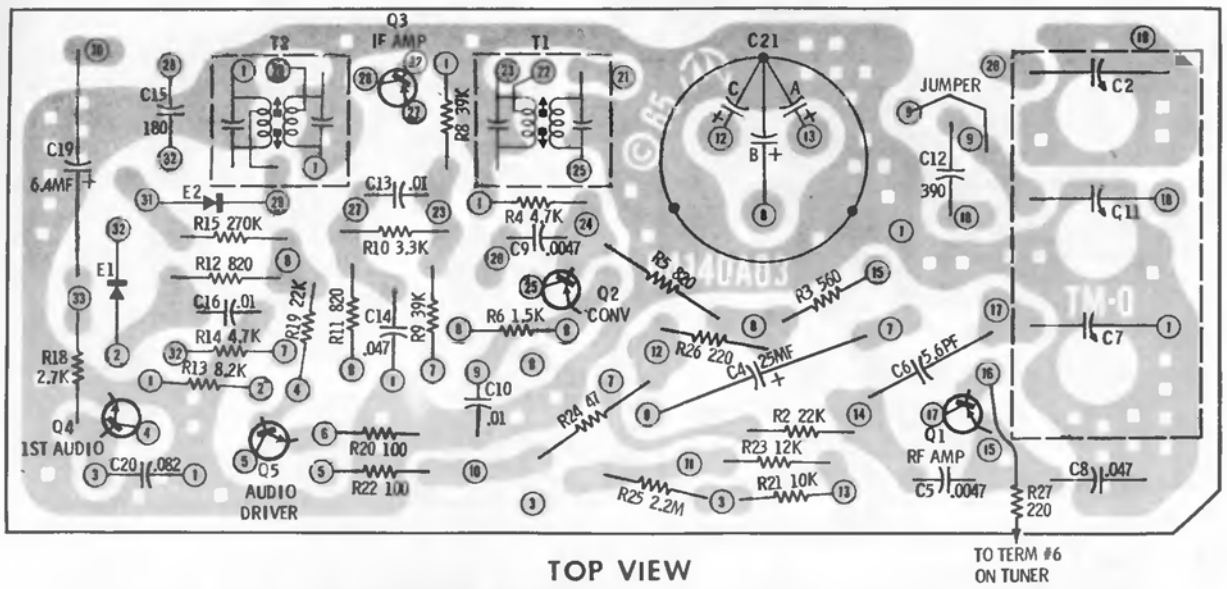


## TOP VIEW

*PLATED CHASSIS REFERENCE POINTS AND PARTS LOCATION* (VIEW FROM COMPONENT SIDE OF BOARD)

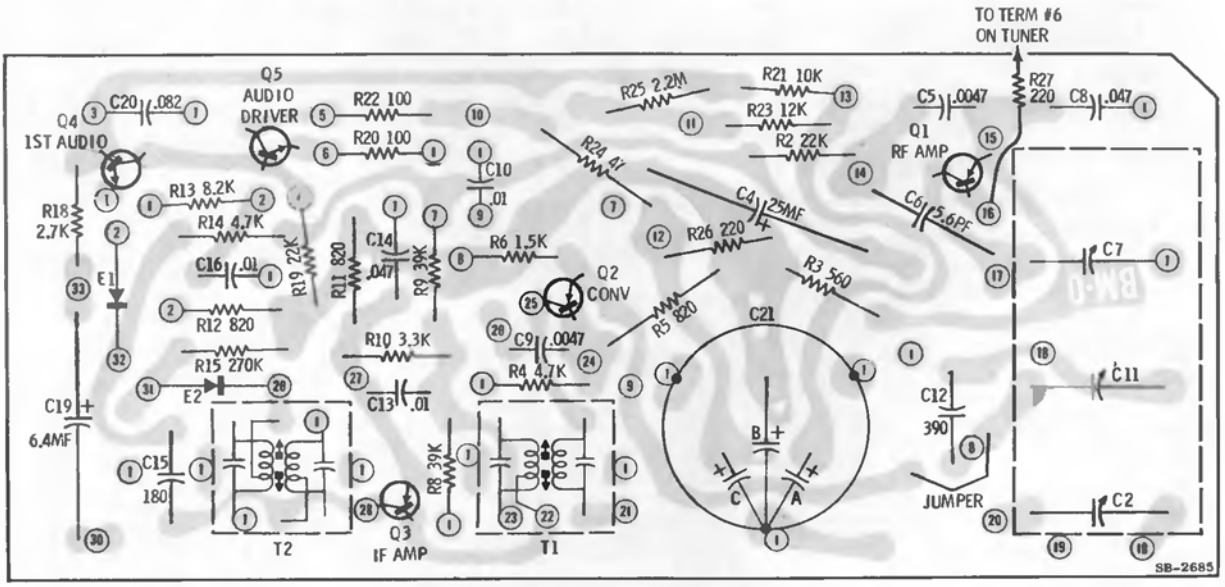


## BOTTOM VIEW

*PLATED CHASSIS REFERENCE POINTS AND PARTS LOCATION* (VIEW FROM WIRING SIDE OF BOARD)

# MOTOROLA

## MODEL TM326M

(Continued from preceding page at left)

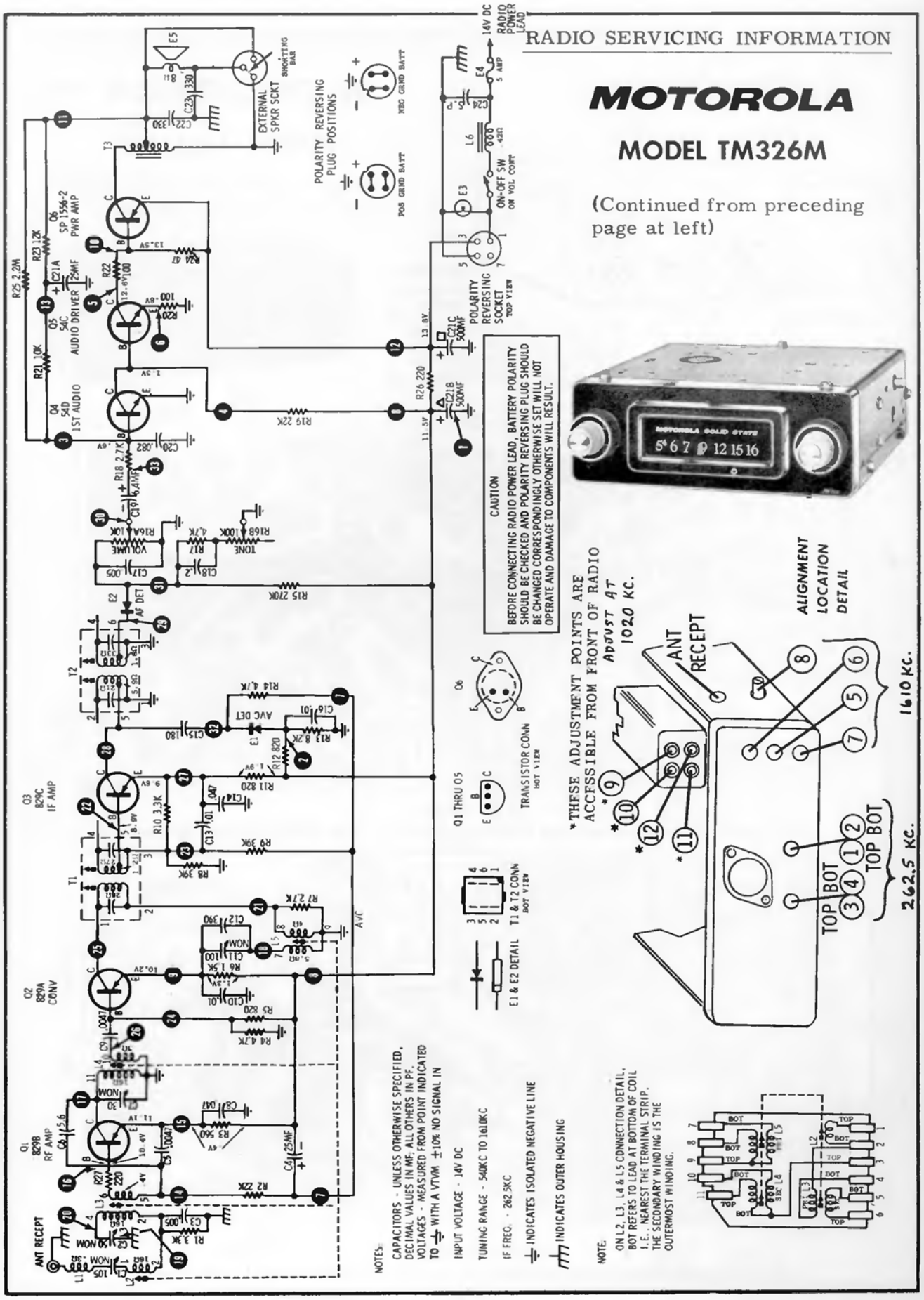

# MOTOROLA

## MODEL TM336M

(Diagram and other data on the next page adjacent at right)

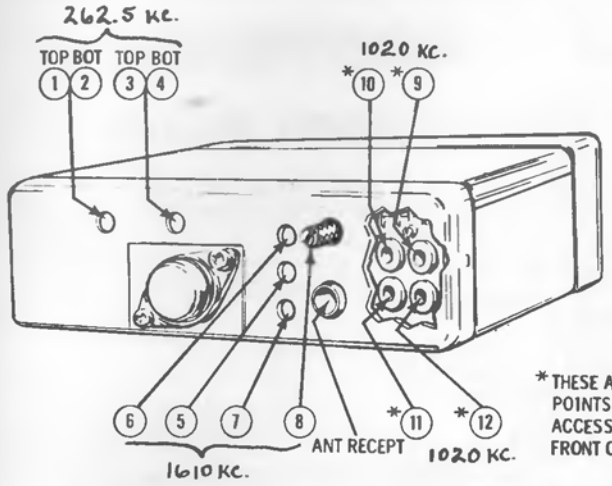


**ALIGNMENT LOCATION DETAIL**

*THESE ADJUSTMENT POINTS ARE ALSO ACCESSIBLE FROM FRONT OF RADIO

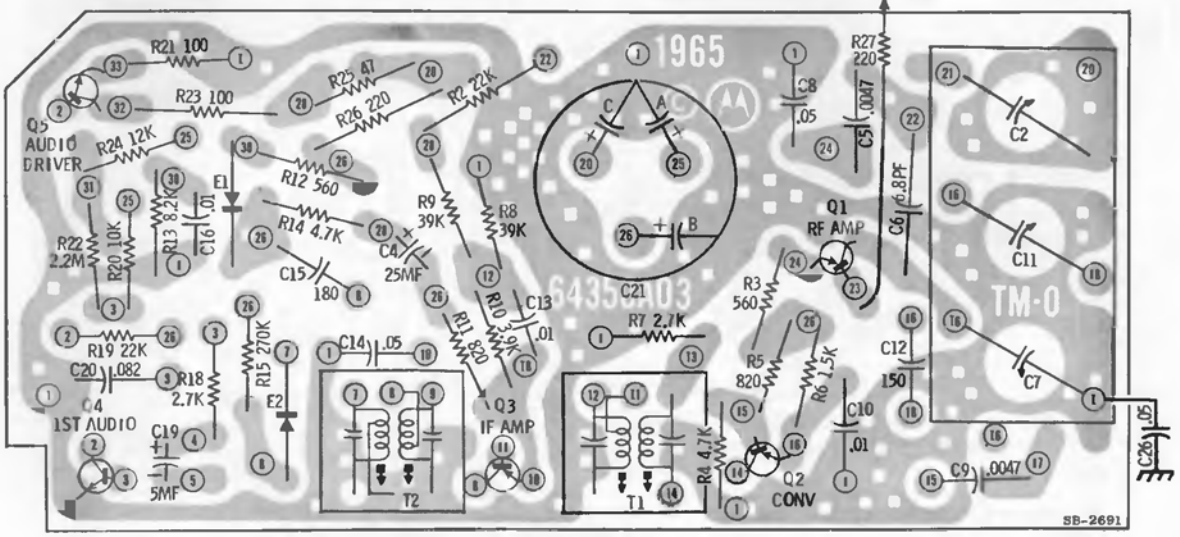


**TOP VIEW**

***PLATED CHASSIS REFERENCE POINTS AND PARTS LOCATION* (VIEW FROM COMPONENT SIDE OF BOARD)**

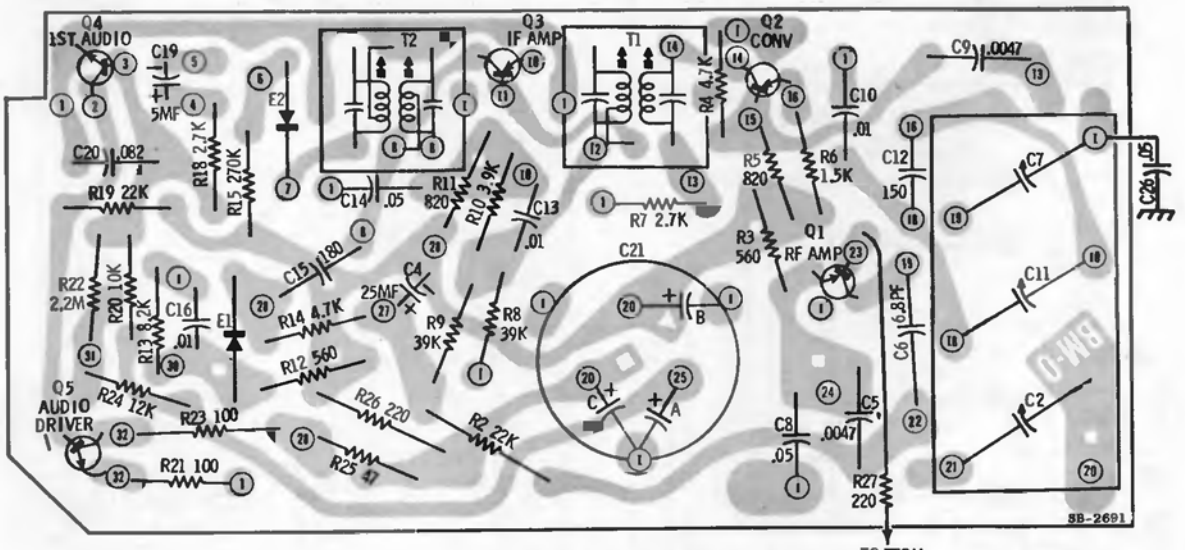


**BOTTOM VIEW**

***PLATED CHASSIS REFERENCE POINTS AND PARTS LOCATION* (VIEW FROM WIRING SIDE OF BOARD)**

# MOTOROLA

## MODEL TM336M

(Continued from preceding page)

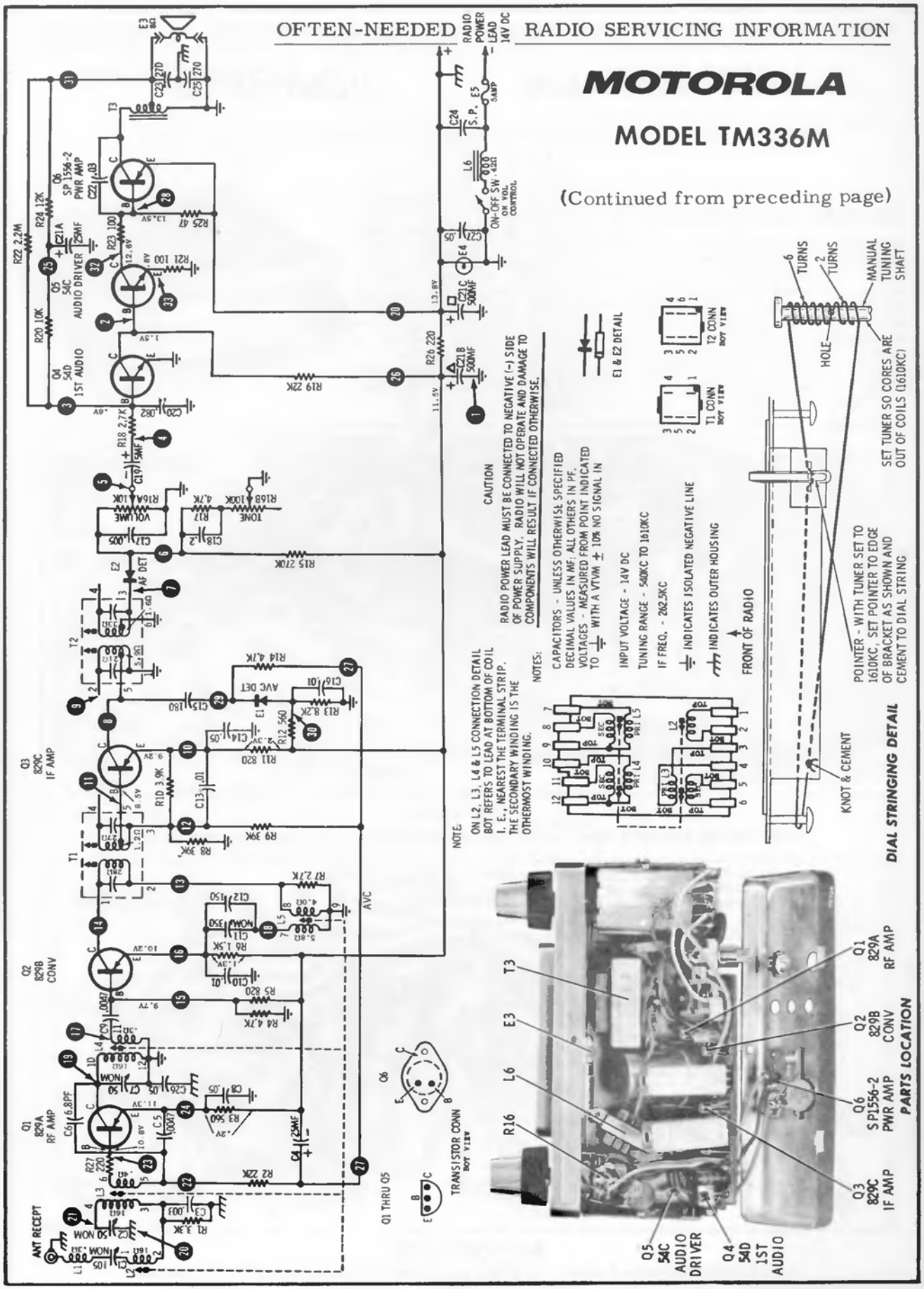

# MOTOROLA MODEL TM526A

(Diagram and other service data on the next page adjacent at right)

## GENERAL INFORMATION

Universal automotive type all-transistor superheterodyne AM radio for standard broadcast reception; operates from 12 volt negative or positive ground system (by simply re-positioning a polarity reversing plug on the radio). This receiver contains a plated chassis board, 6 transistors and 2 diodes and uses an 8 ohm speaker system.

This radio is of the compact, under-dash type. In-dash installations, however, can be made in many cars with the use of trimplate kits AK-223 or KM35T. Special knobs are designed to give all installations a custom look. The tone knob and the dummy knob are reversible. For in-dash installations, the knob is used "backwards" and provides a flush fit. For under-dash installations, the knob is used "face-up" and fills the extra space where the dash would be.

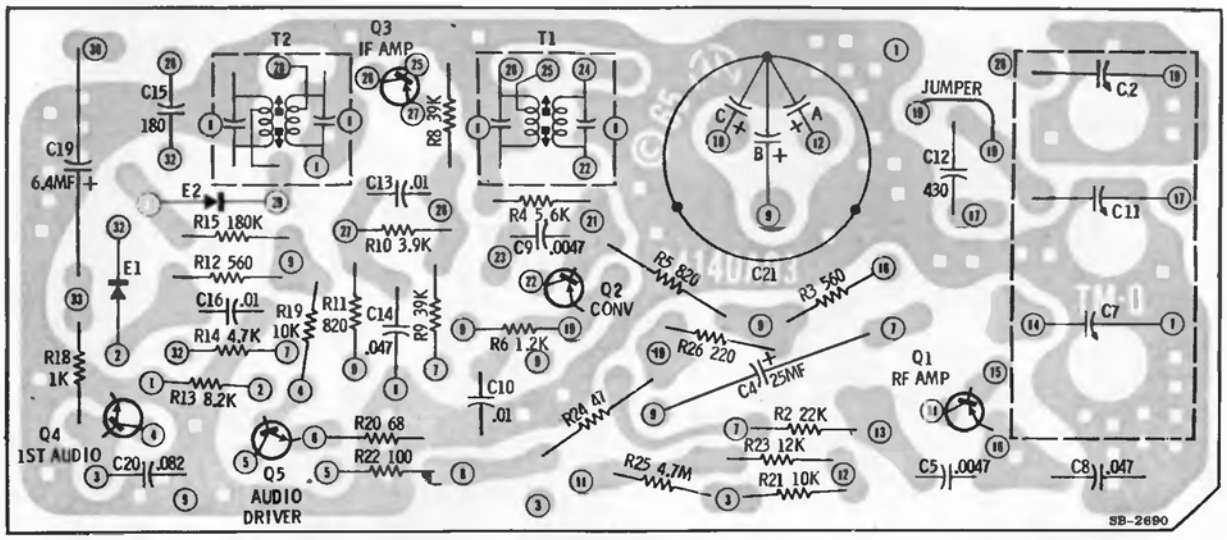


**TOP VIEW**

***PLATED CHASSIS REFERENCE POINTS AND PARTS LOCATION*** **(VIEW FROM COMPONENT SIDE OF BOARD)**

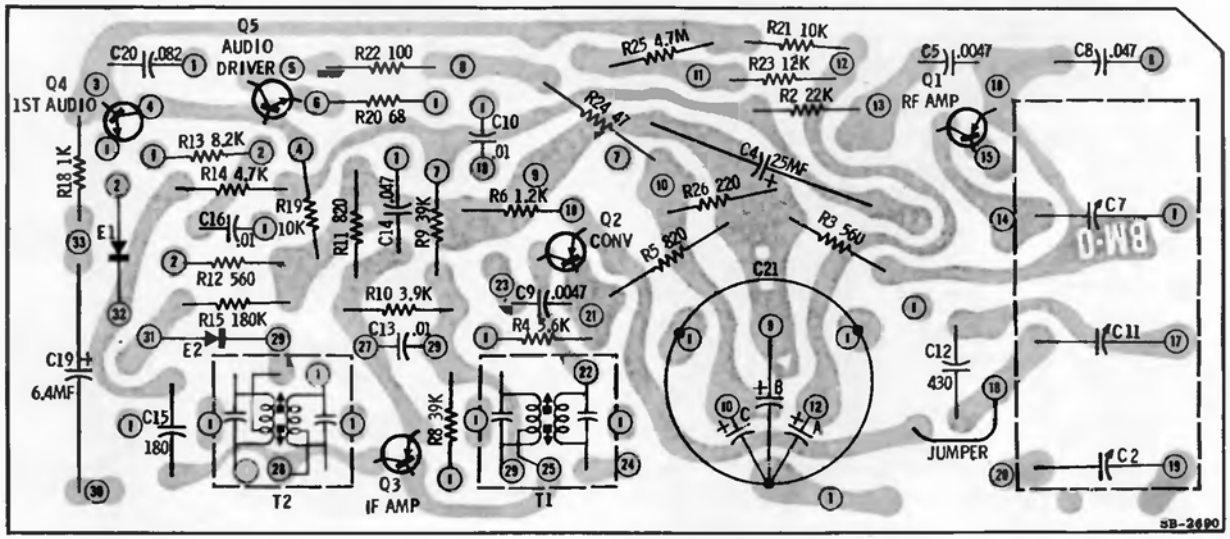


**BOTTOM VIEW**

***PLATED CHASSIS REFERENCE POINTS AND PARTS LOCATION*** **(VIEW FROM WIRING SIDE OF BOARD)**

# MOTOROLA

## MODEL TM526A

(Continued from preceding page)

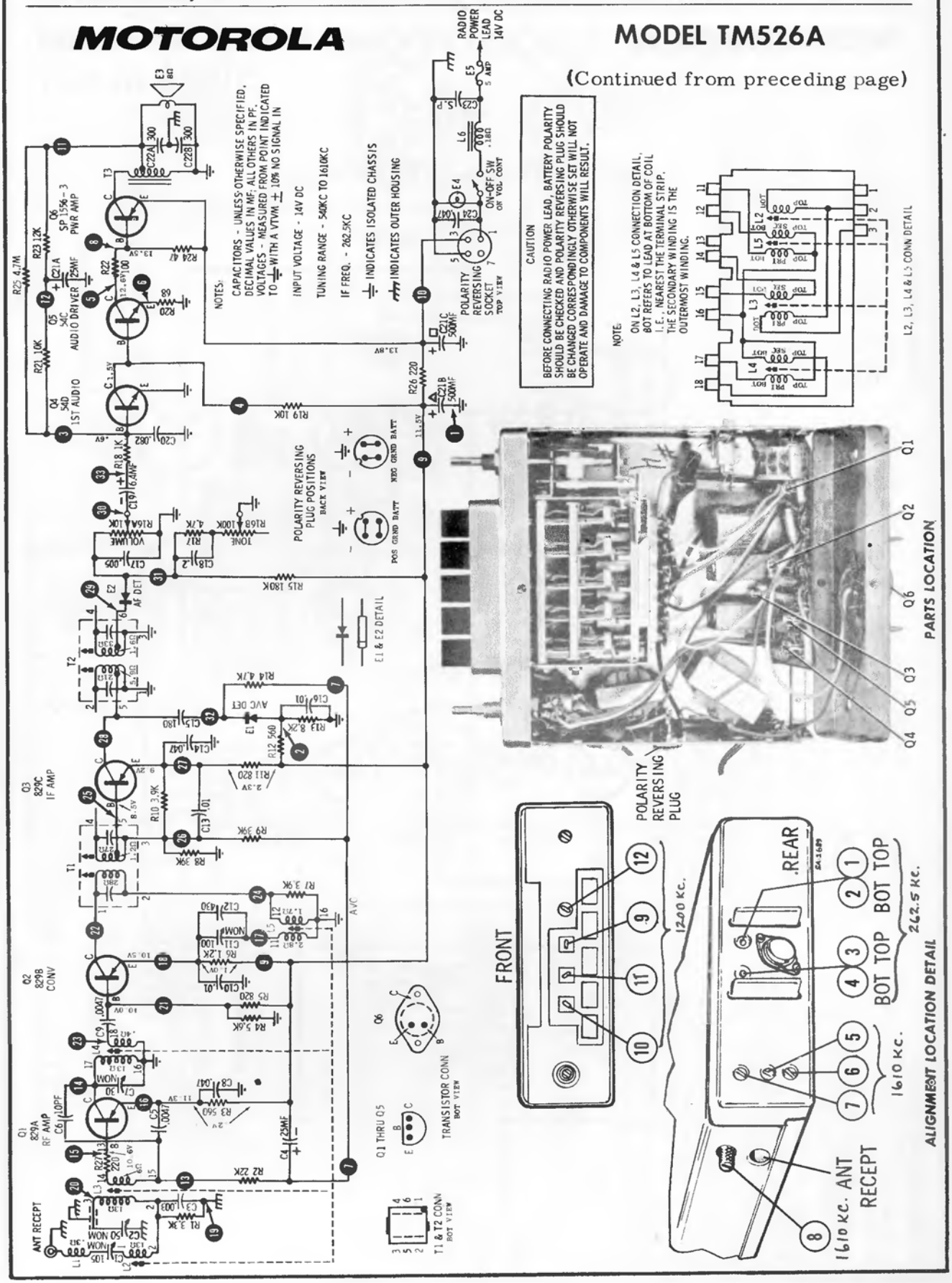

**MOTOROLA**

# MODELS PP200B,201B
## CHASSIS HS-2347

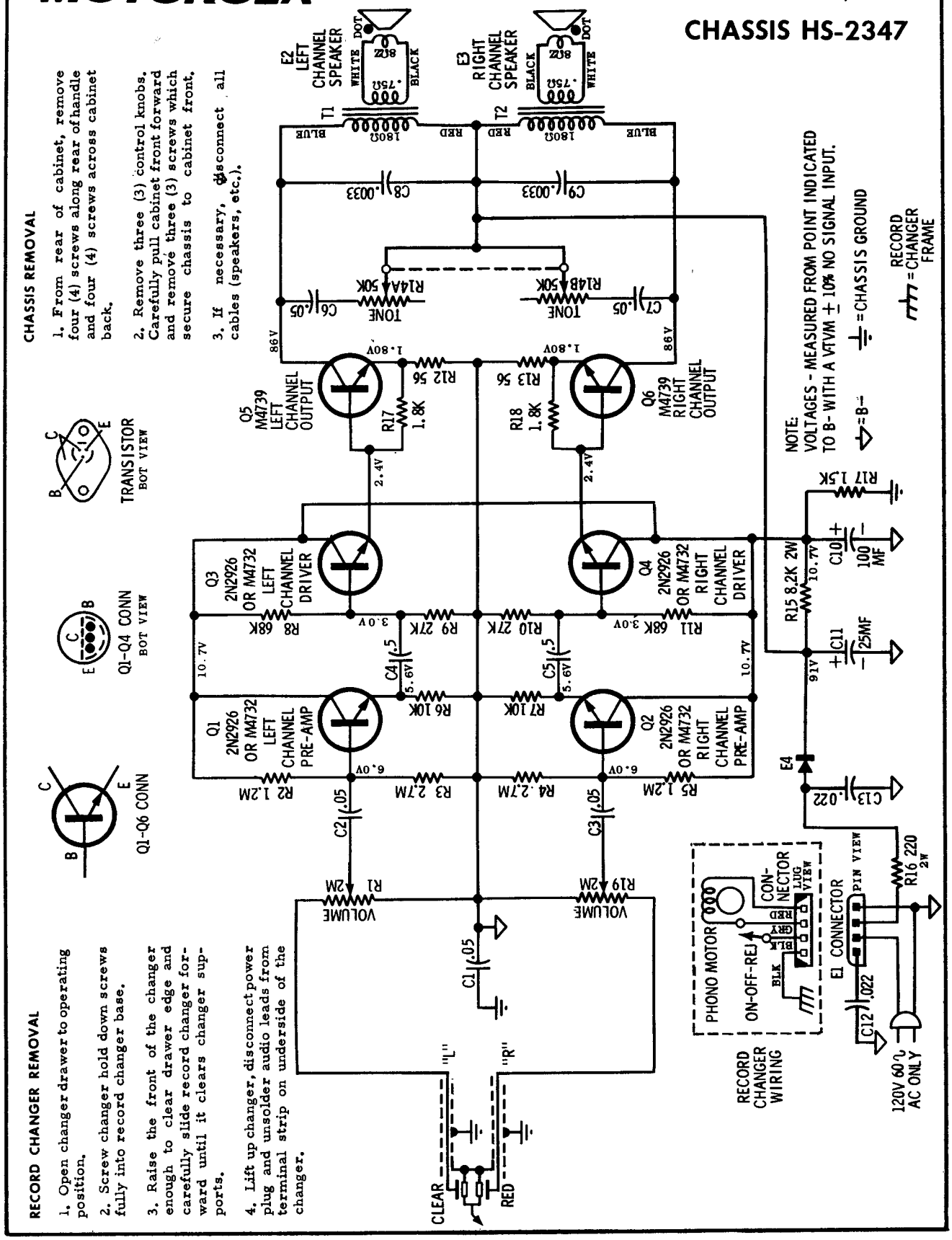


**CHASSIS REMOVAL**

1. From rear of cabinet, remove four (4) screws along rear of handle and four (4) screws across cabinet back.
2. Remove three (3) control knobs. Carefully pull cabinet front forward and remove three (3) screws which secure chassis to cabinet front.
3. If necessary, disconnect all cables (speakers, etc.).

**RECORD CHANGER REMOVAL**

1. Open changer drawer to operating position.
2. Screw changer hold down screws fully into record changer base.
3. Raise the front of the changer enough to clear drawer edge and carefully slide record changer forward until it clears changer supports.
4. Lift up changer, disconnect power plug and unsolder audio leads from terminal strip on underside of the changer.

# MOTOROLA

## MODEL MP100B
## CHASSIS HS-2348

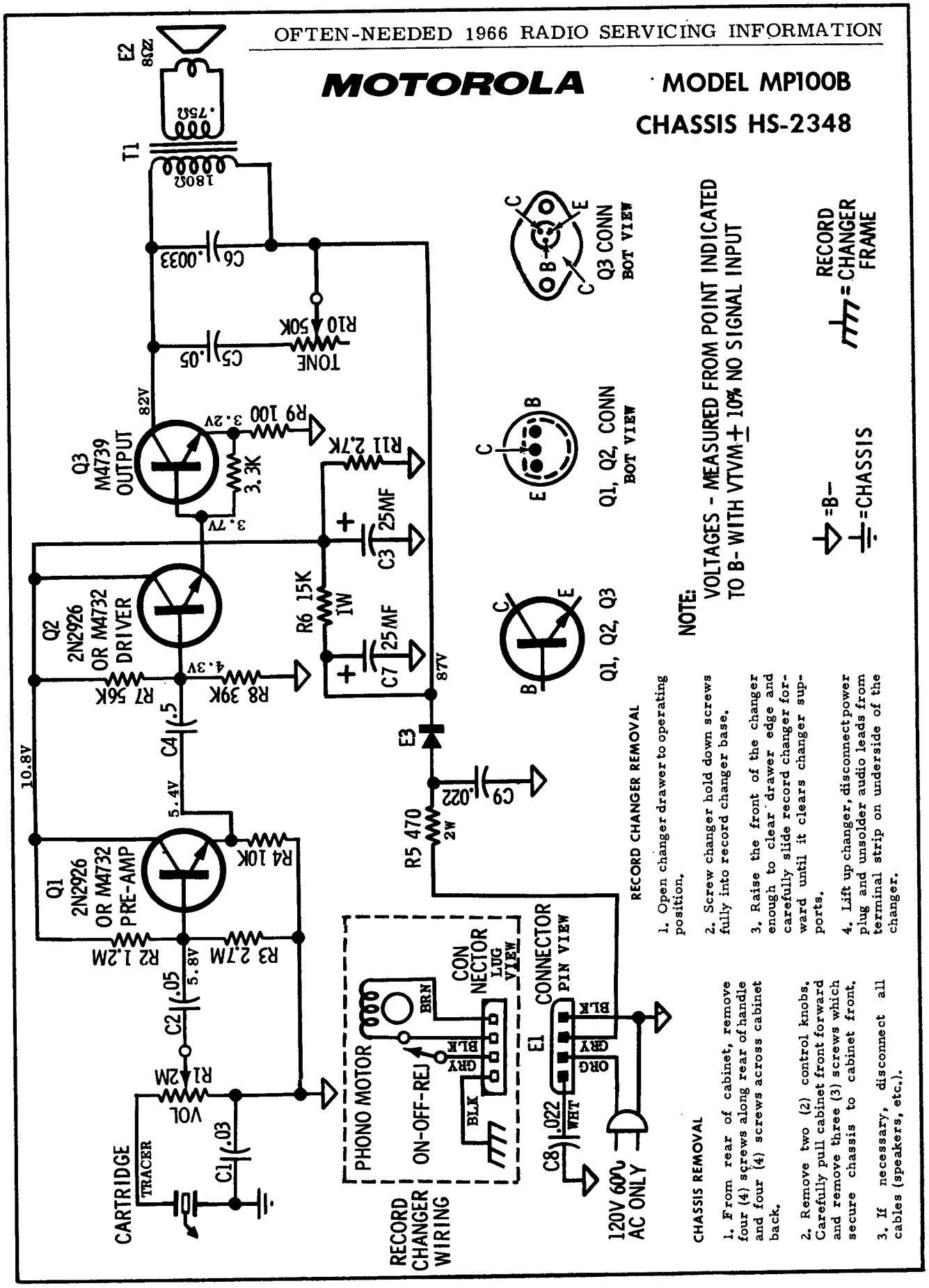


### RECORD CHANGER REMOVAL

1. Open changer drawer to operating position.
2. Screw changer hold down screws fully into record changer base.
3. Raise the front of the changer enough to clear drawer edge and carefully slide record changer forward until it clears changer supports.
4. Lift up changer, disconnect power plug and unsolder audio leads from terminal strip on underside of the changer.

### CHASSIS REMOVAL

1. From rear of cabinet, remove four (4) screws along rear of handle and four (4) screws across cabinet back.
2. Remove two (2) control knobs. Carefully pull cabinet front forward and remove three (3) screws which secure chassis to cabinet front.
3. If necessary, disconnect all cables (speakers, etc.).

# MOTOROLA MODELS PP301B, 302B; SP310B; PK400B, 401B; SK450B THRU 453B, 500B THRU 509B; 23LK412B THRU 416B CHASSIS HS-2334, HS-2336, HS-2339, HS-2349

Material on pages 90 through 94.

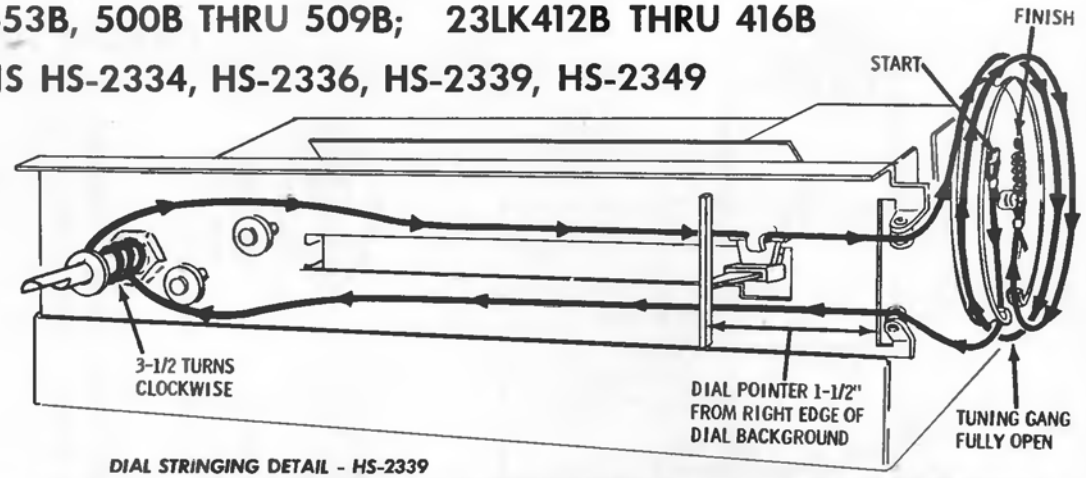


DIAL STRINGING DETAIL - HS-2339

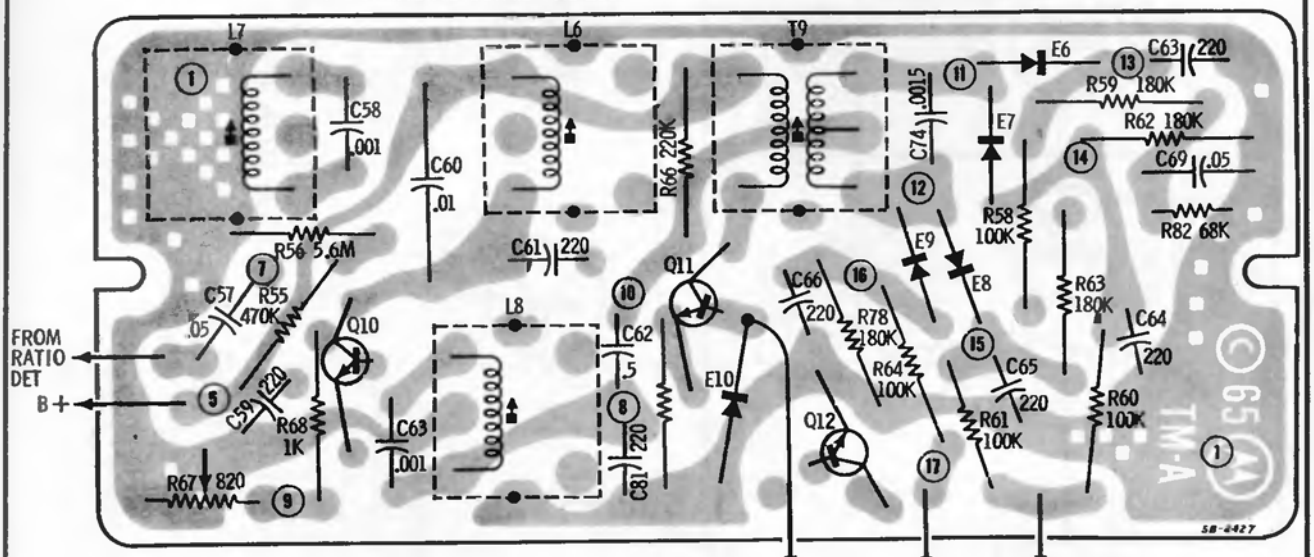


TOP VIEW

MULTIPLEX PLATED BOARD (PART OF CHASSIS HS-2339)

TO PILOT SQUELCH

RIGHT AUDIO

LEFT AUDIO

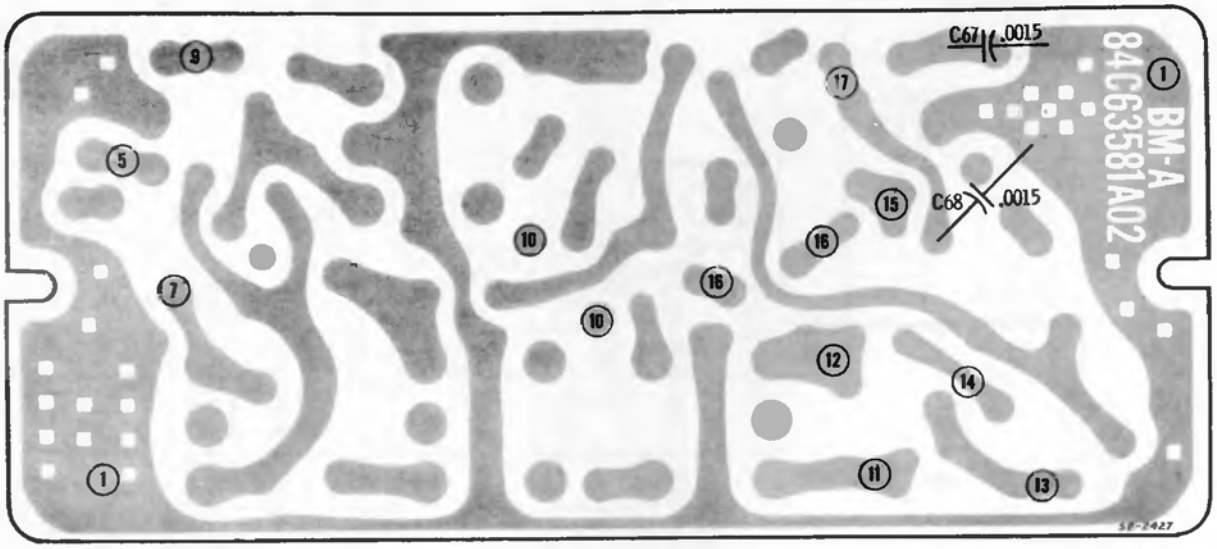


BOTTOM VIEW

MULTIPLEX PLATED BOARD (PART OF CHASSIS HS-2339)

## MOTOROLA Chassis HS-2339

(Continued)

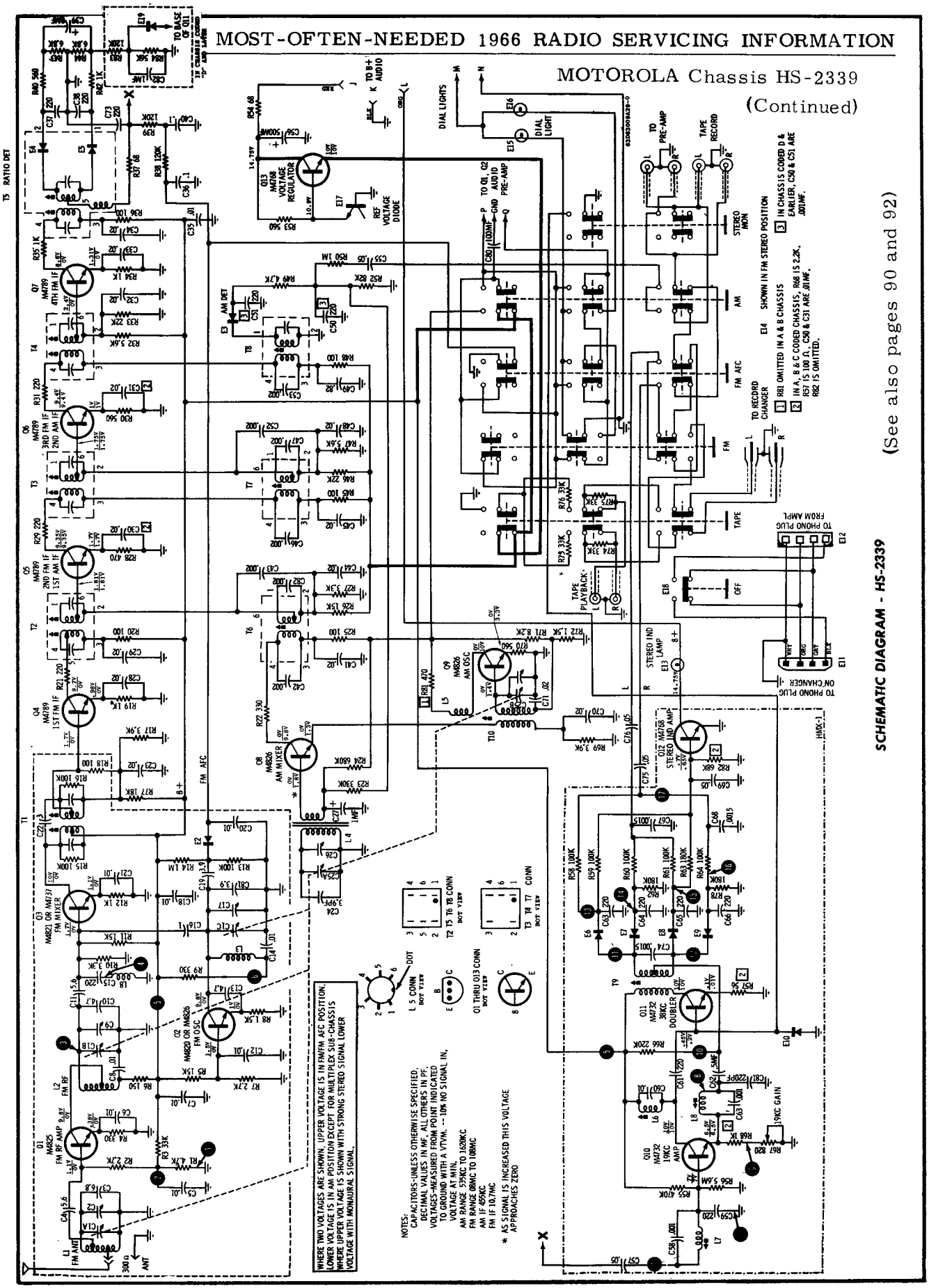


**SCHEMATIC DIAGRAM - HS-2339**

(See also pages 90 and 92)

MOTOROLA Chassis HS-2339 Service Information, Continued

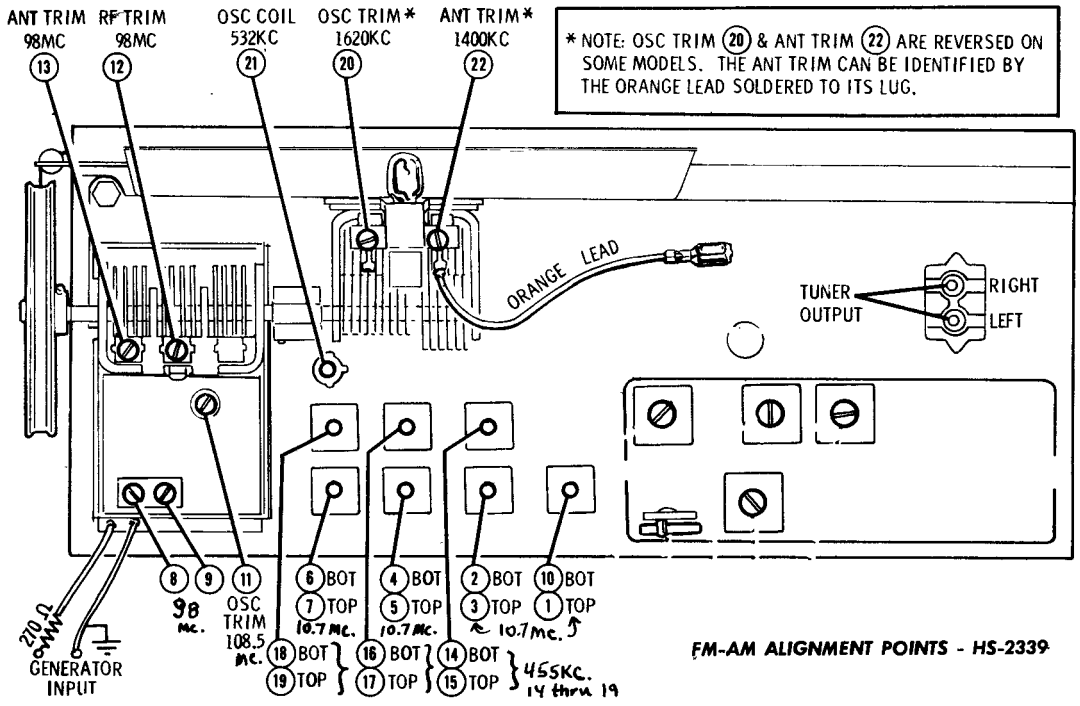


FM-AM ALIGNMENT POINTS - HS-2339

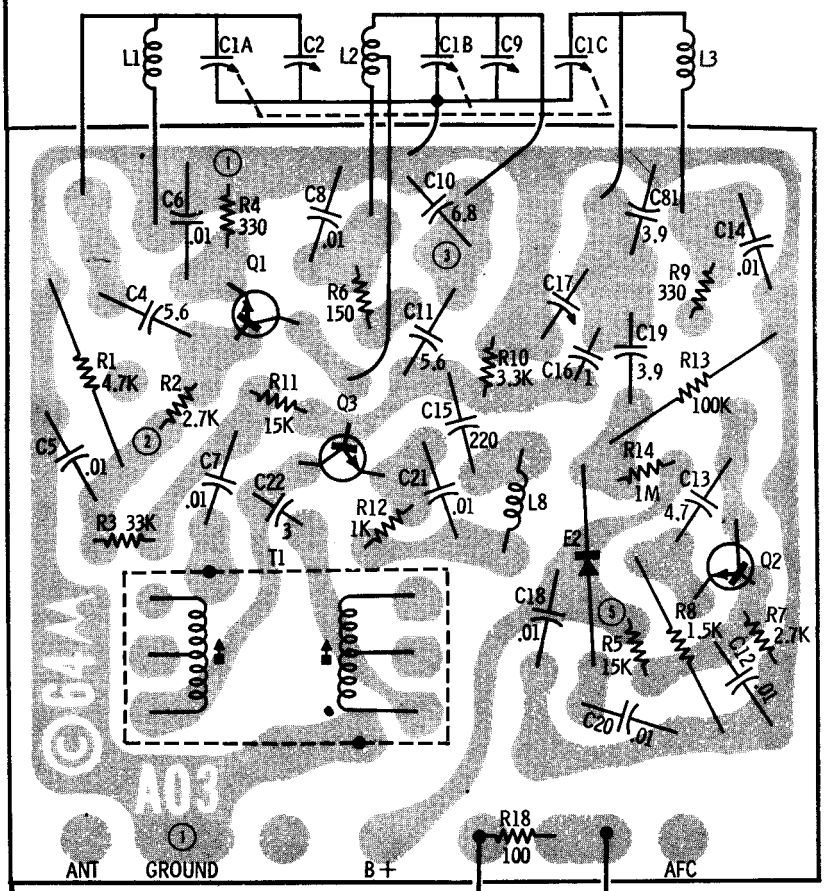


TOP VIEW

FM RF PLATED BOARD (PART OF CHASSIS HS-2339)

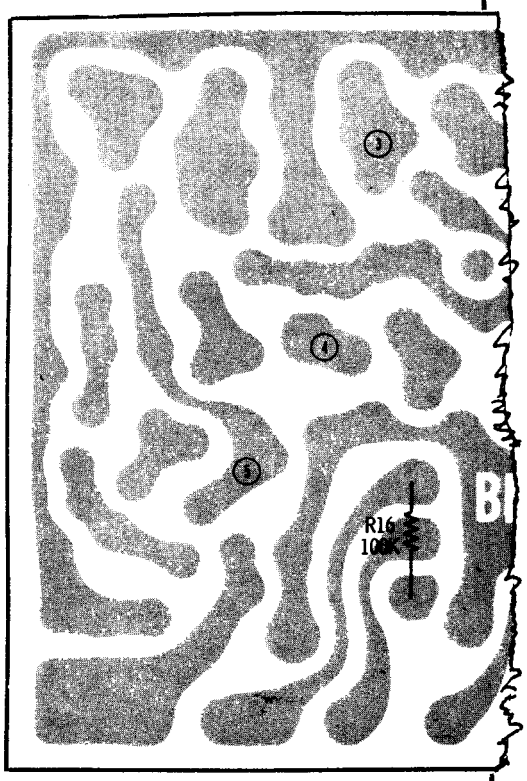


BOTTOM VIEW

FM RF PLATED BOARD (PART OF CHASSIS HS-2339)

## MOTOROLA Chassis HS-2334
(Continued)

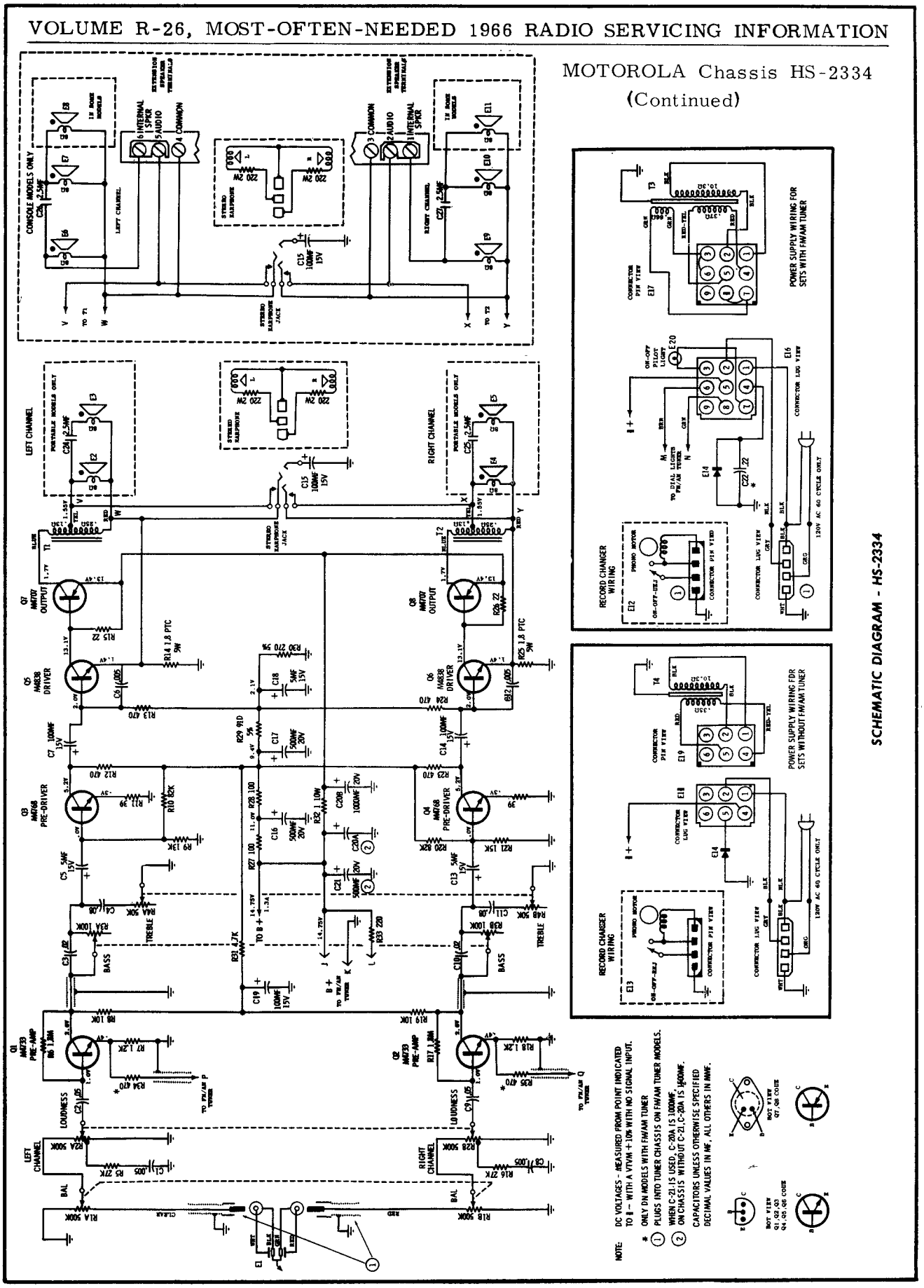

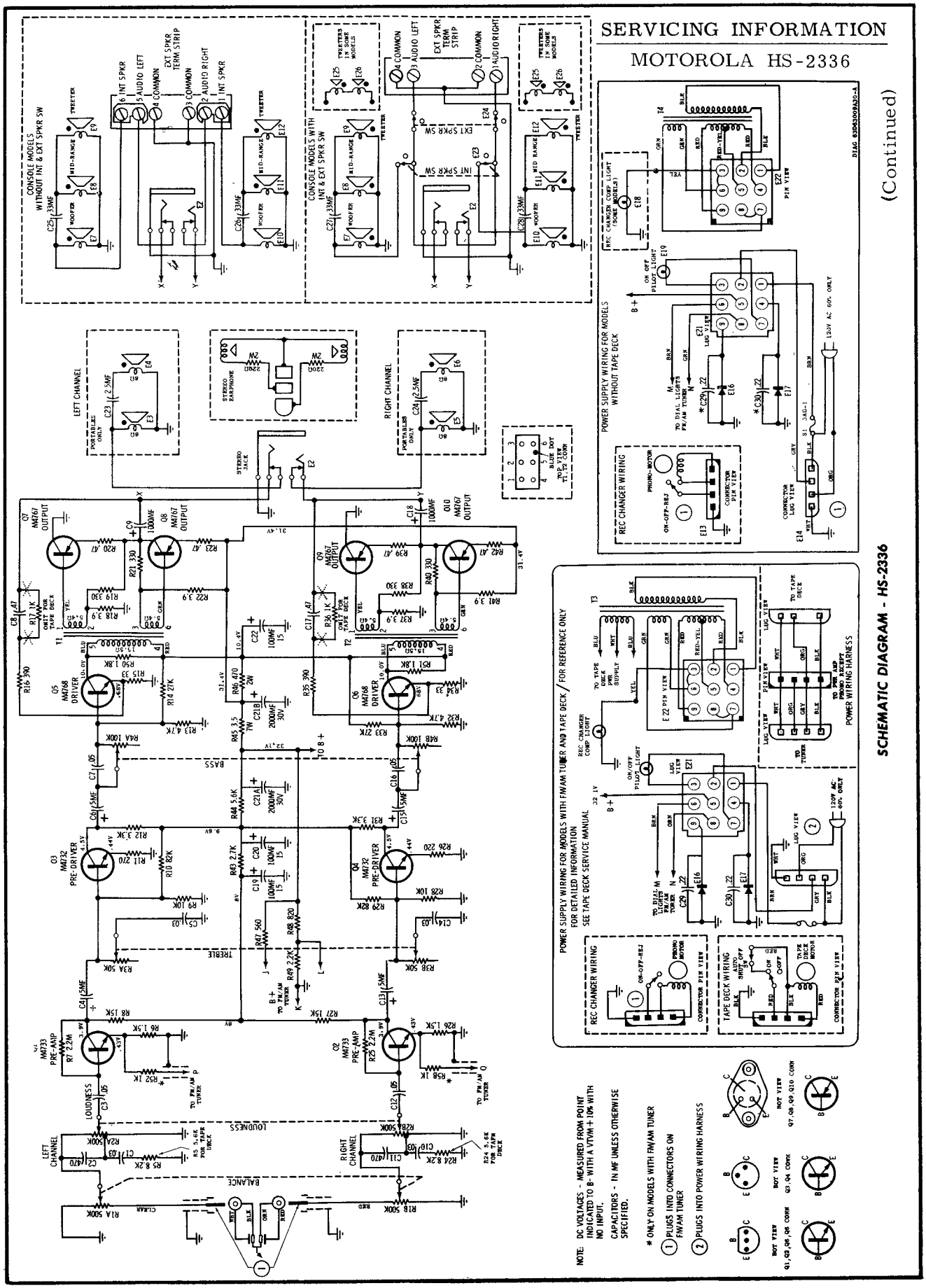


SCHEMATIC DIAGRAM - HS-2336

(Continued)

# PHILCO

## TRANSISTOR PORTABLE
## MODEL NT809

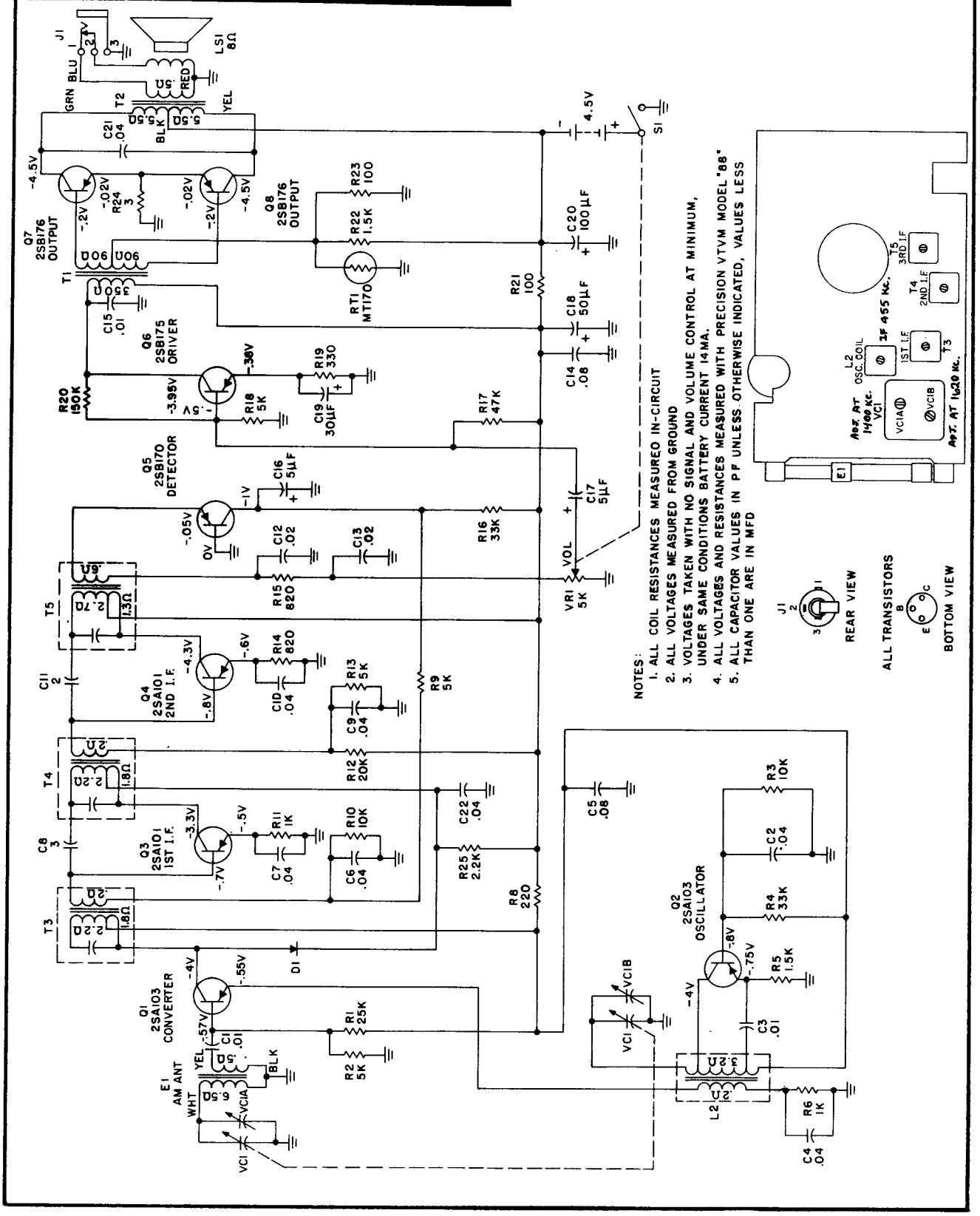

PHILCO **Models P720, P721, P722, P723, P724, P880, P881, P882, P883, P884, P885**

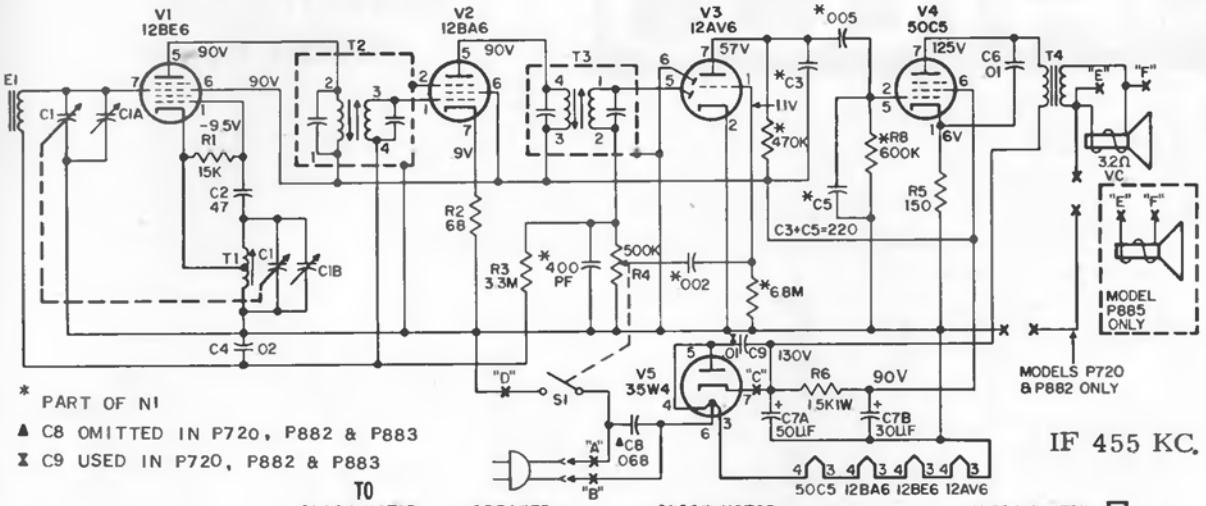


* PART OF N1

▲ C8 OMITTED IN P720, P882 & P883

⧗ C9 USED IN P720, P882 & P883

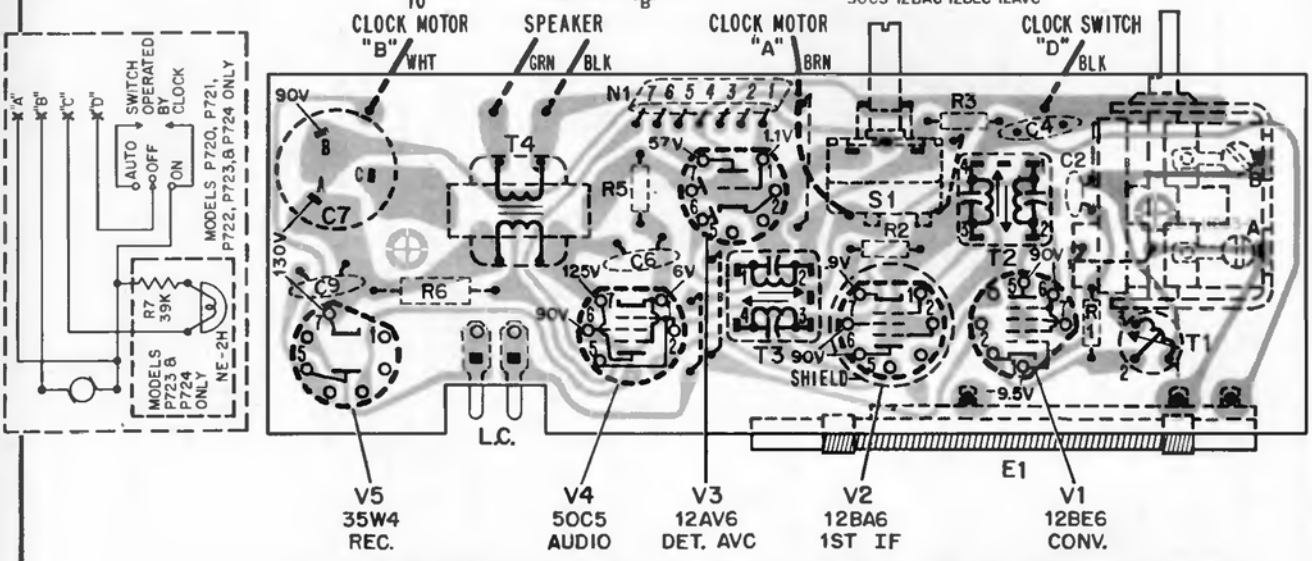


Perma-Circuit Panel, AM Models P720, P882, P883, Bottom View

NOTE:
SWITCH (S1) NOT USED IN CLOCK MODELS

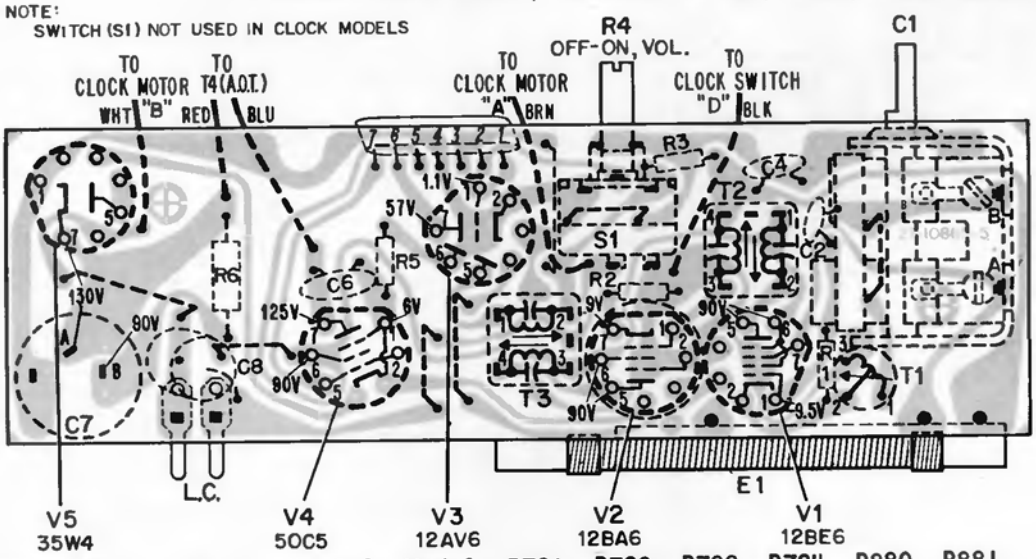


Perma-Circuit Panel, AM Only Models P721, P722, P723, P724, P880, P881, P884, P885, Bottom View, Parts Location

PHILCO Models P710, P933, P941

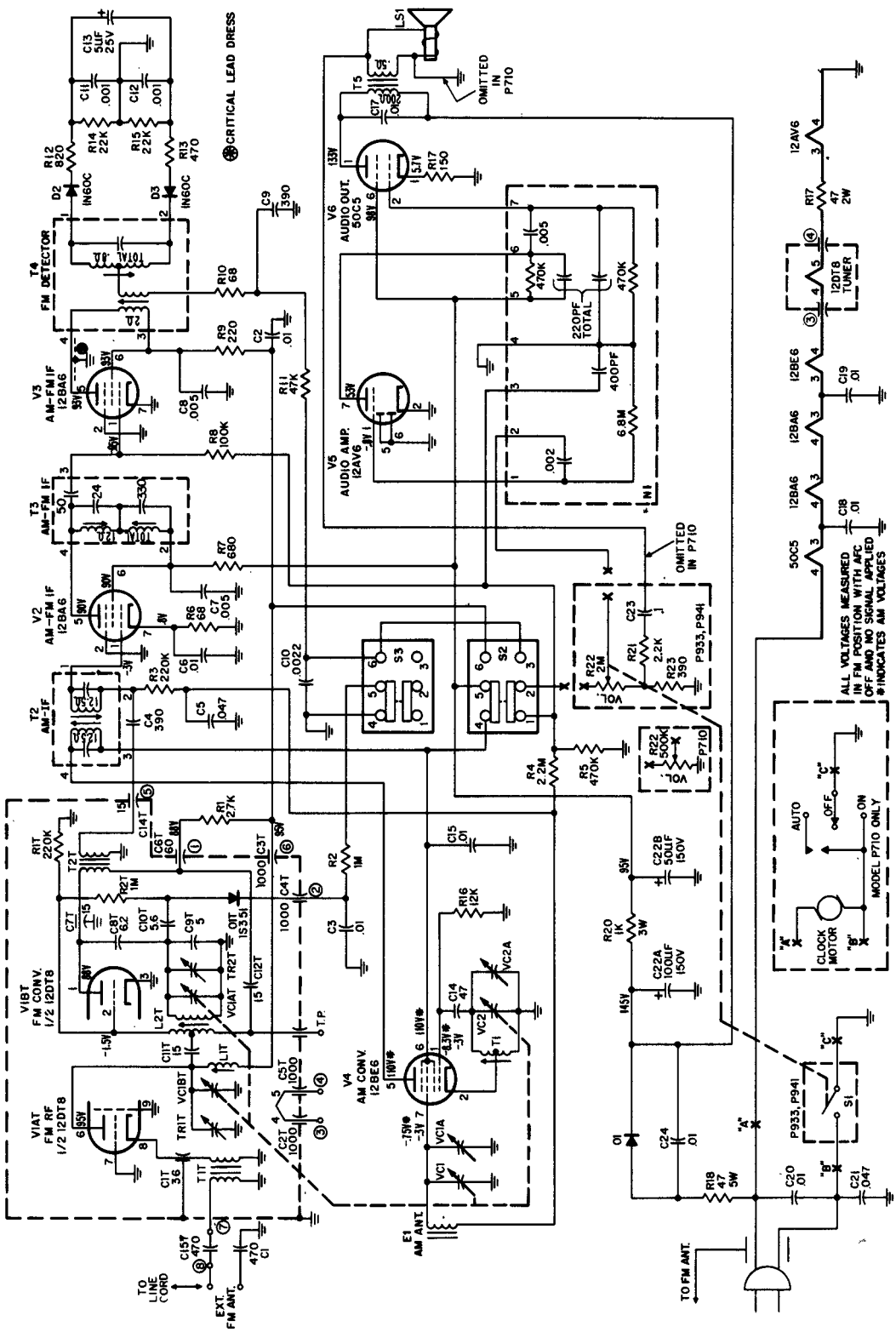


PHILCO Schematic Diagram, Model P710, P933, P941

## PHILCO Model NT814

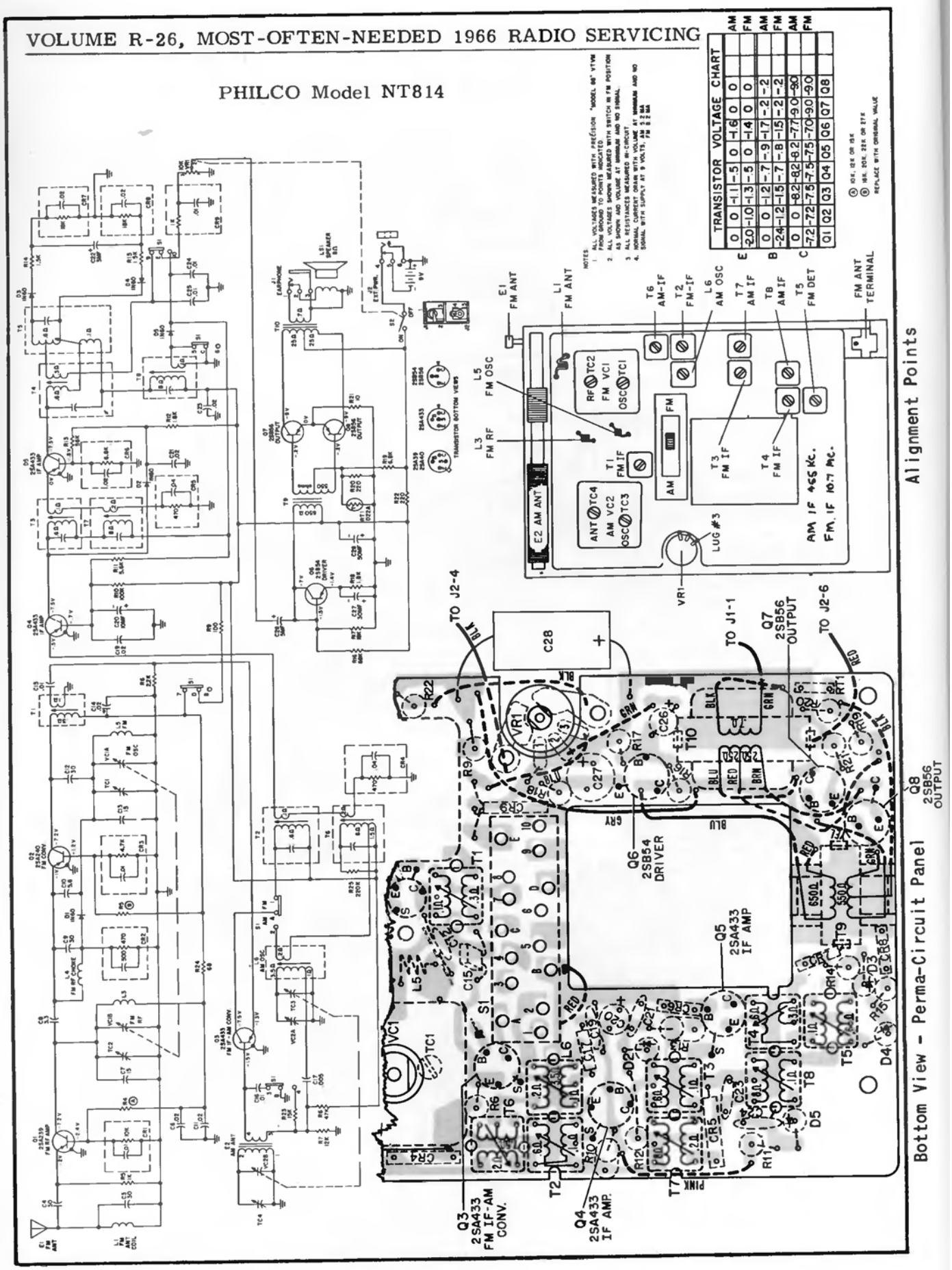

## PHILCO Model NT815

(AM IF 455 KC.)
(FM IF 10.7 MC.)

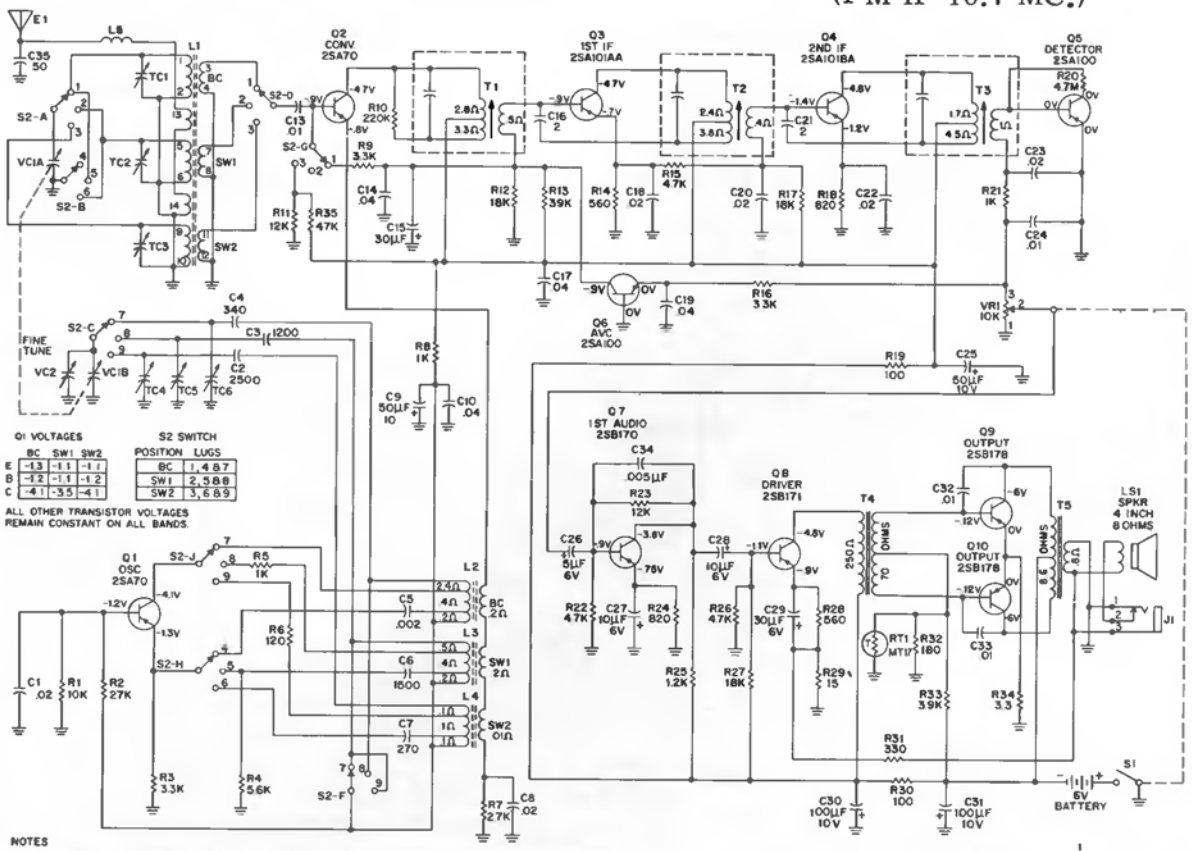


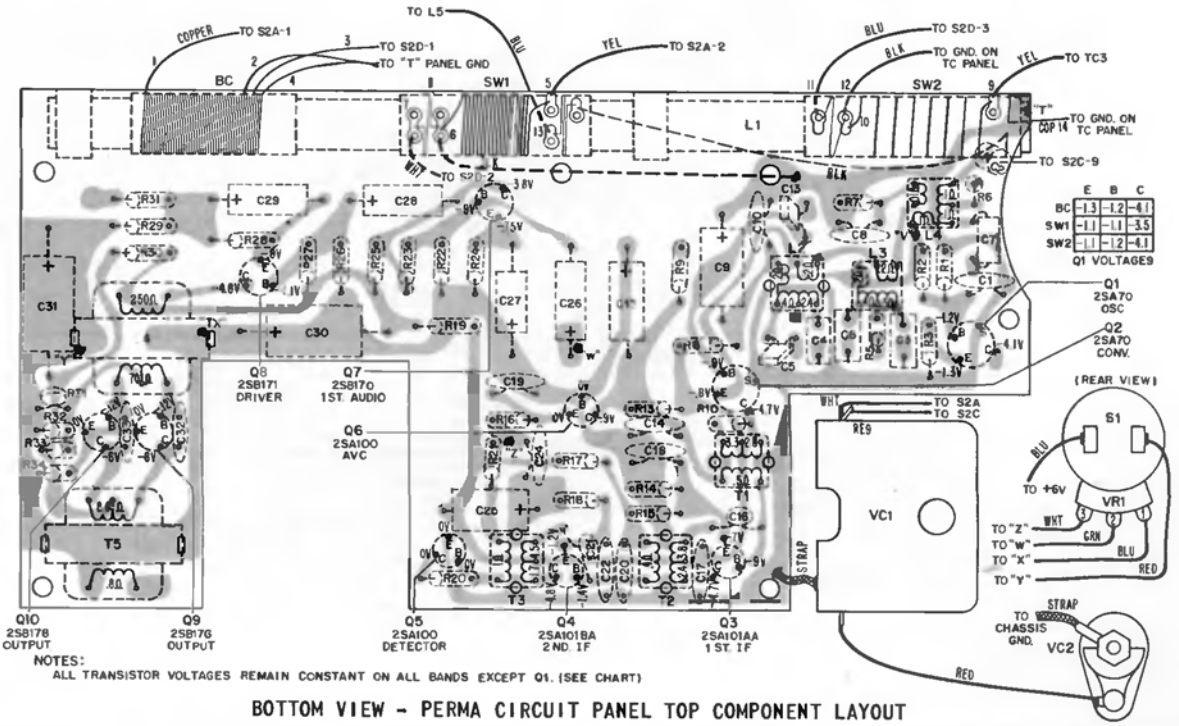


BOTTOM VIEW - PERMA CIRCUIT PANEL TOP COMPONENT LAYOUT

PHILCO Tuner-Amplifier Chassis P10ST used in Models P1002 and P1718

(Diagram continued on page at right; other material on page following)

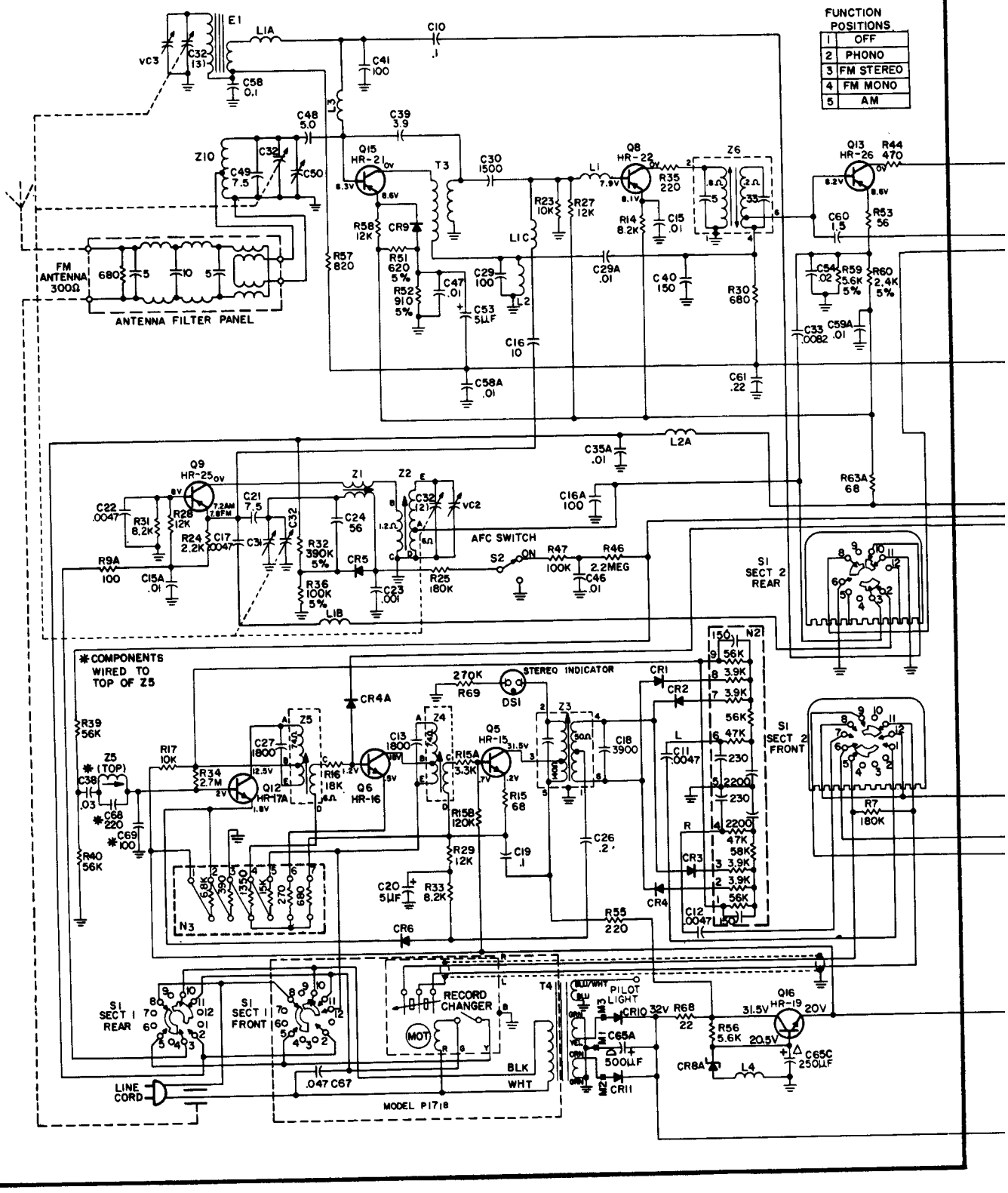

## PHILCO Tuner-Amplifier Chassis P10ST used in Models P1002 and P1718

(Continued; see also next page,over)

**CHASSIS REMOVAL - P10ST, P25ST,**

1. Disconnect line cord and remove back.
2. Disconnect speaker cables, phono power cable, phono input cable and bin light when used.
3. Remove holddown screws at rear of chassis.
4. Remove screws inside of cabinet at corners of front bezel.
5. Remove screws holding EXT. SPKR. JACK PLATE to cabinet.
6. Remove chassis from front of cabinet; in drop-in models lift lid then lift chassis up and out of cabinet.

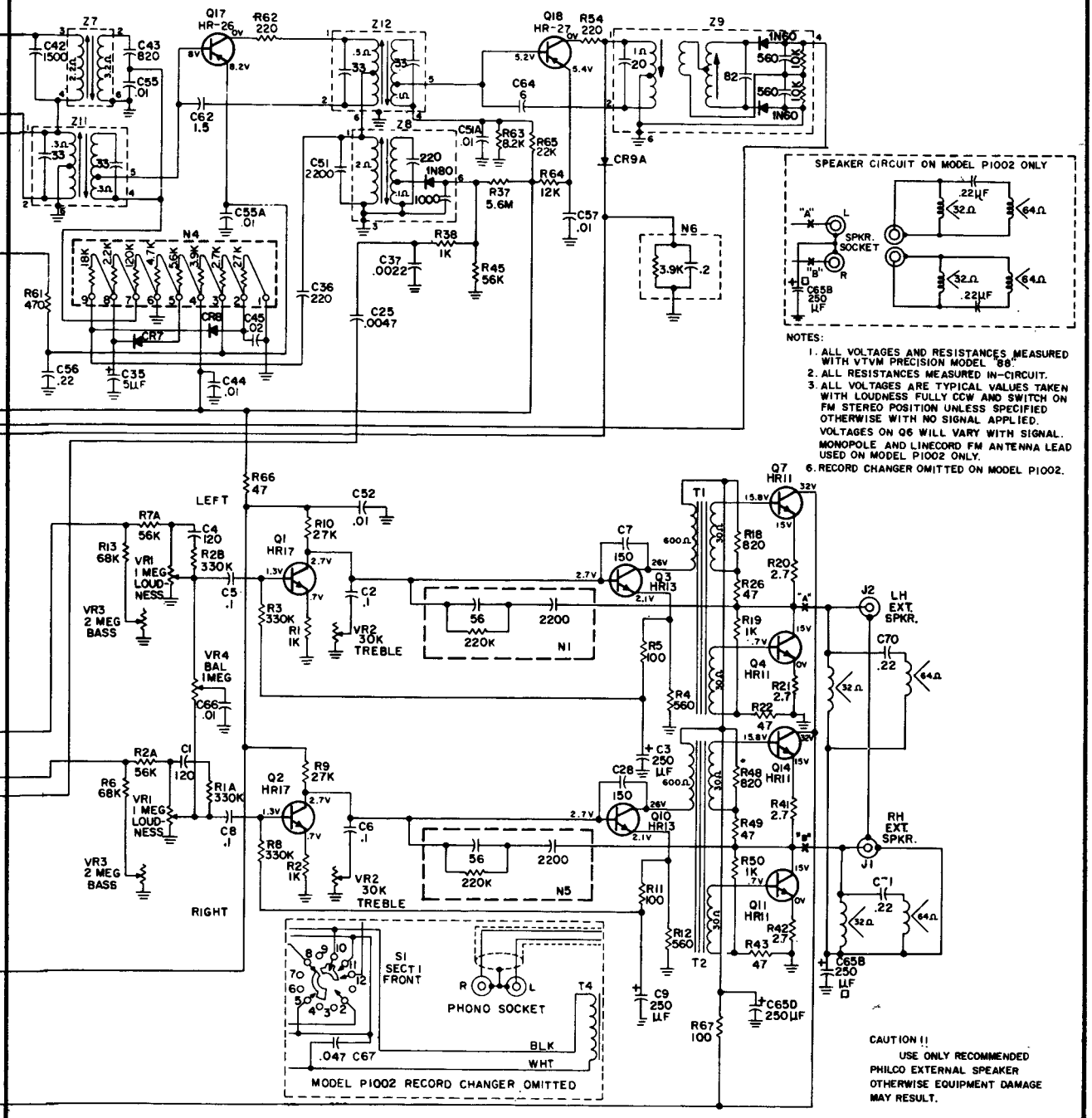

## PHILCO Chassis P10ST, continued

ALL VOLTAGES MEASURED WITH VTVM "PRECISION" MODEL "88" WITH SELECTOR SWITCH IN FM STEREO POSITION, AFC SW. ON AND NO SIGNAL.

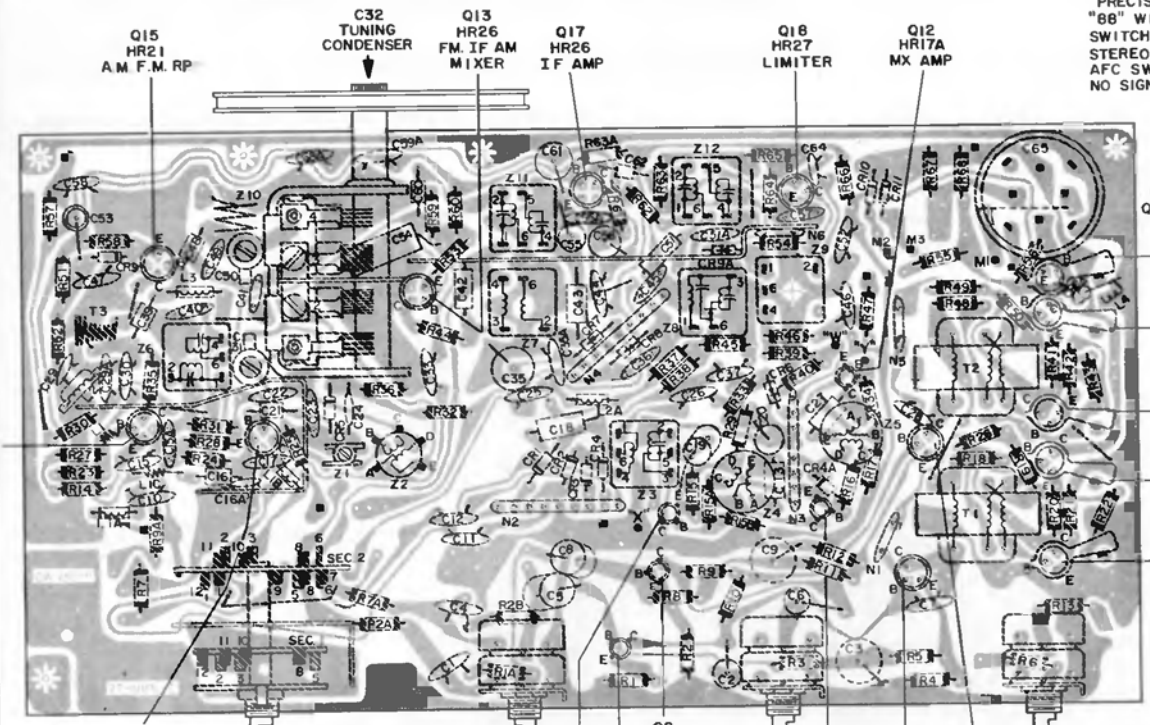

Q1, Q2, Q3, Q5, Q6, Q10, Q12, Q16

TRANSISTOR BASING BOTTOM VIEW

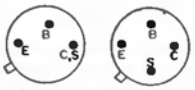


Q4, Q7, Q11, Q14 — Q8, Q9, Q13, Q15, Q17, Q18

**Bottom View - Top Component Location P10ST Chassis**

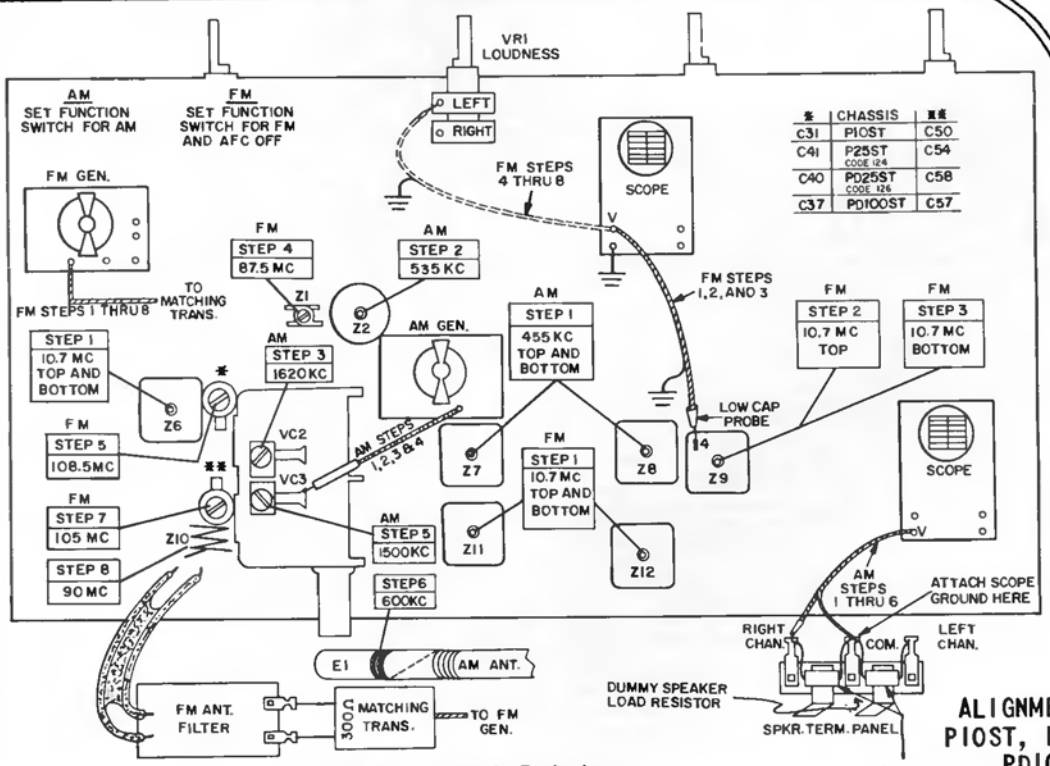


| * | CHASSIS | ** |
|---|---|---|
| C31 | P10ST | C50 |
| C41 | P25ST CODE 124 | C54 |
| C40 | PD25ST CODE 126 | C58 |
| C37 | PD100ST | C57 |

| TYPICAL VOLTAGES | | | |
|---|---|---|---|
| Q | E | B | C |
| 1 | .7 | 1.3 | 2.7 |
| 2 | .7 | 1.3 | 2.7 |
| 3 | 2.1 | 2.7 | 26 |
| 4 | 0 | .7 | 15 |
| 5 | .2 | .7 | 31.5 |
| 6 | *.5 | *1.2 | 18 |
| 7 | 15 | 15.8 | 32 |
| 8 | 8.1 | 7.9 | 0 |
| 9 | 7.8 | 8.0 | 0 |
| 10 | 2.1 | 2.7 | 26 |
| 11 | 0 | .7 | 15 |
| 12 | 1.8 | 2 | 12.5 |
| 13 | 8.6 | 8.2 | 0 |
| 14 | 15 | 15.8 | 32 |
| 15 | 8.6 | 8.3 | 0 |
| 16 | 20 | 20.5 | 31.5 |
| 17 | 8.2 | 8 | 0 |
| 18 | 5.4 | 5.2 | 0 |

**AM FM Alignment Points**

**ALIGNMENT INFORMATION P10ST, P25ST, PD25ST, & PD100ST CHASSIS**

## PHILCO P25ST - CODE 124 CHASSIS ELECTRICAL PARTS

| SYM-BOL | LOCA-TION | DESCRIPTION | SERVICE PART NO. |
|---|---|---|---|
| | | **CAPACITORS** | |
| C1 | G8 | .1 mf, treble cont. | 30-4706-13 |
| C1A | | 100 pf, 67KC filter | 30-1293-32 |
| C2 | G10 | elec., 250 mf, 6V, driver emit. | 30-2611-10 |
| C2A | | 220 pf, 67KC filter | 30-1294-19 |
| C3 | G11 | .1 mfd, bass cont. | 30-4695-30 |
| C4 | F7 | .1 mf, 1st audio | 30-4695-30 |
| C5 | F9 | .1 mf, treble cont. | 30-4706-13 |
| C6 | F10 | .05 mf, treble cont. | 30-1272-23 |
| C7 | G10 | .05 mf, treble cont. | 30-1272-23 |
| C8 | F8 | 150 pf, driver C to B | 30-1294-31 |
| C9 | F12 | 2 mfd, bass cont. | 30-2612-2 |
| C10 | G13 | .0047 mf, bass cont. | 30-1294-28 |
| C11 | F13 | .0047 mf, bass cont. | 30-1294-28 |
| C12 | F7 | .1 mf, 1st audio | 30-6495-30 |
| C13 | F9 | elec., 250 mf, 6V, driver emit. | 30-2611-10 |
| C14 | E5 | 4700 pf, mx. out. | 30-1294-28 |
| C15 | E5 | 4700 pf, mx. out. | 30-1294-28 |
| C16 | E2 | .1 mf, AM ant. | 30-4706-13 |
| C17 | E3 | 10 pf, FM osc. inj. | 30-1221-23 |
| C17A | E3 | 100 pf, AM osc. | 30-1293-32 |
| C18 | E3 | 4700 pf, AM osc. FB | 30-1294-28 |
| C19 | E9 | 1800 pf, 19KC transf. | 30-4707-15 |
| C21 | E2 | .01 mf, FM mix. | 30-1294-6 |
| C21A | D2 | .01 mf, B+ bypass | 30-1294-6 |
| C22 | D3 | 7.5 pf, FM osc. FB | 30-1221-24 |
| C23 | D4 | .001 mf, FM osc. ret. | 30-1294-20 |
| C24 | D4 | 56 pf, AFC | 30-1287-5 |
| C25 | D6 | .001 AM out. | 30-1294-20 |
| C26 | D7 | 3900 pf, 38KC transf. | 30-4707-17 |
| C27 | D8 | .2 mf, mx. amp. | 30-4704-3 |
| C28 | D8 | .1 mf, mx. | 30-4706-13 |
| C29 | D9 | elec., 5 mf, 25V, 38KC emit. | 30-2610-2 |
| C30 | D10 | 1800 pf, mx. amp. transf. | 30-4707-15 |
| C31 | D11 | 150 pf, driver C to B | 30-1294-31 |
| C32 | D2 | 1500 pf, FM mix. coup. | 30-1294-30 |
| C33 | D3 | 4700 pf, osc. base | 30-1294-13 |
| C34 | D5 | .0082 mf, AM osc. inj. | 30-1294-32 |
| C36 | D6 | elec., 5 mf, 15V, AVC | 30-2610-1 |
| C36A | C7 | .01 mf, B+ bypass | 30-1294-6 |
| C37 | D7 | 220 pf, AVC coup. | 30-1293-34 |
| C38 | | 2200 pf, AM bypass | 30-1294-29 |
| C39 | C10 | .03 mf, mx. input | 30-1272-5 |
| C40 | C1 | 100 pf, AM R-F coil | 30-1293-32 |
| C40A | D2 | .01 mf, AM mix. coup. | 30-1294-6 |
| C41 | C3 | trimmer 3 to 12.5 pf FM osc. | 31-6520-37 |
| C42 | A5 | tuning AM-FM | 31-2795-1 |
| C43 | C2 | 3.9 pf, AM-FM R-F neut. | 30-1221-14 |
| C44 | C3 | 150 pf, FM I-F-AM R-F bypass | 30-1293-22 |
| C45 | C3 | 100 pf, AM ant. | 30-1293-32 |
| C46 | C5 | 1500 pf, 1st AM I-F | 30-4707-7 |
| C47 | C7 | 820 pf, 1st AM I-F | 30-4707-6 |
| C48 | C7 | .01 mf, B+ bypass | 30-1294-6 |
| C49 | C8 | .02 mf, AVC | 30-1294-27 |
| C50 | C10 | .01 mf, AFC bypass | 30-1294-6 |
| C51 | B2 | .01 mf, AM-FM R-F | 30-1294-6 |
| C52 | B3 | 4.7 pf, AM ant. coup. | 30-1221-13 |
| C53 | B3 | 7.5 pf, FM ant. pad. | 30-1293-31 |
| C54 | B3 | trimmer, 1 to 5 pf, FM ant. | 31-6520-36 |
| C55 | B5 | .02 mf, FM I-F-AM mix. | 30-4706-32 |
| C56 | B7 | .01 mf, 1st AM I-F | 30-4706-22 |
| C56A | B7 | .01 mf, I-F emit. | 30-1294-6 |
| C57 | B7 | .22 mf, AVC | 30-4706-29 |
| C58 | B8 | 2200 pf, 2nd AM I-F | 30-4707-16 |
| C58A | B8 | .01 mf, lim. bypass | 30-1294-6 |
| C59 | B10 | .01 mf, B+ bypass | 30-1294-6 |
| C60 | B1 | elec., 5 mf, 15V, overload | 30-2610-1 |

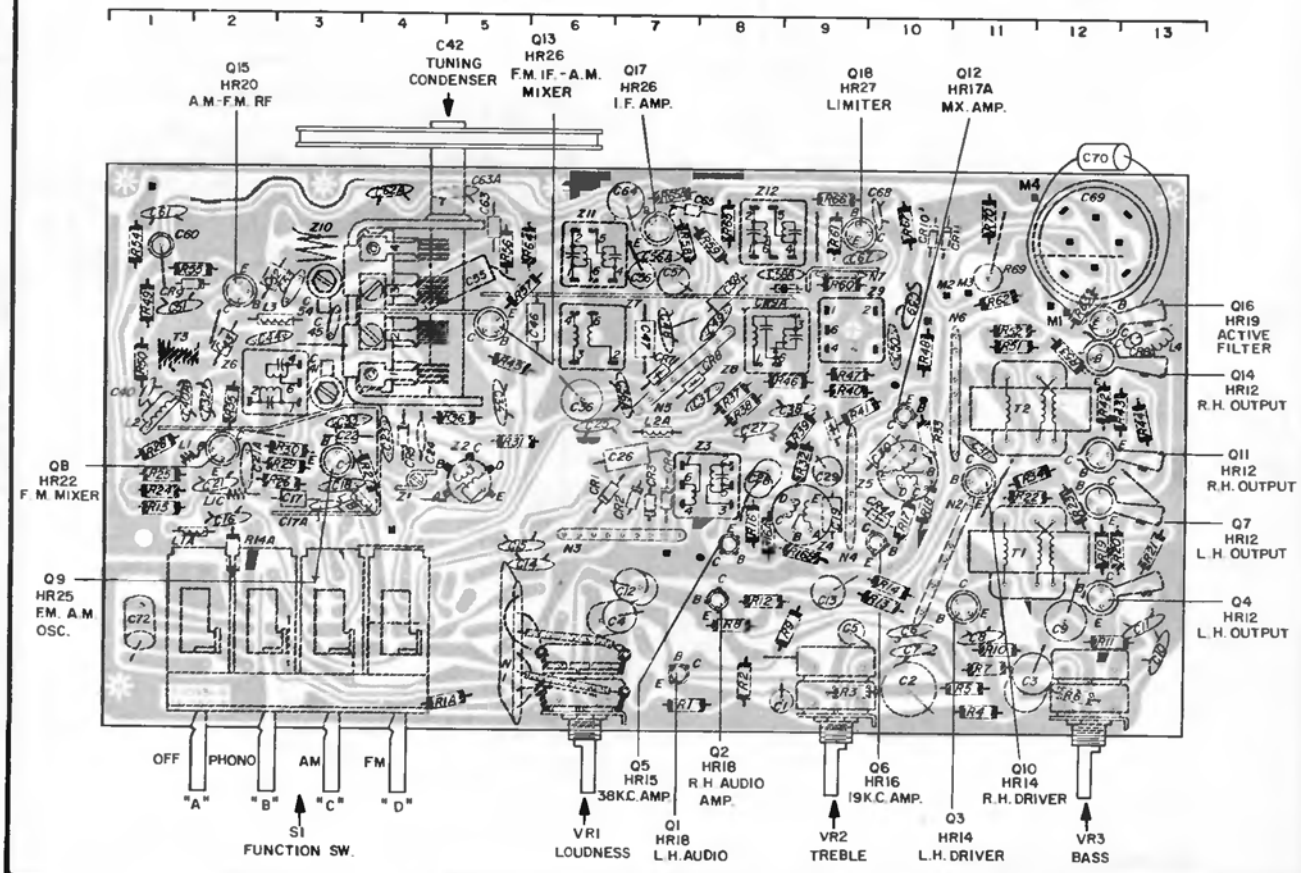


Bottom View - Top Components Location

PHILCO

**P25ST-CODE 124 TUNER-AMPLIFIER CHASSIS - MODELS P1710, P1719, P1722, P1735 & P1737**

(Diagram continued on next page at right; see also the preceding two pages)

| | Q1 | Q2 | Q3 | Q4 | Q5 | Q6 | Q7 | Q8 | Q9 | Q10 | Q11 | Q12 | Q13 | Q14 | Q15 | Q16 | Q17 | Q18 |
|---|---|---|---|---|---|---|---|---|---|---|---|---|---|---|---|---|---|---|
| E | .5 | .5 | 2.3 | .1 | .3 | 0 | 24.5 | 8.7 | 8.2 7.2* | 2.3 | .1 | 1.5 | 10.3 | 24.5 | 10.8 | 20.5 | 10.3 | 5.6 |
| B | 1 | 1 | 2.8 | .7 | .9 | .4 | 25 | 8.4 | 8.1 8.0* | 2.8 | .7 | 2.1 | 10.6 | 25 | 10.4 | 21 | 10 | 5.3 |
| C | 2.8 | 2.8 | 28 | 24 | 32 | 20 | 48 | .2 | 0 | 28 | 24 | 12 | .3 | 48 | 0 | 32.5 | .4 | .2 |

* AM VOLTAGES

NOTES:
1. ALL VOLTAGES AND RESISTANCES MEASURED WITH VTVM PRECISION MODEL "88".
2. ALL RESISTANCES MEASURED IN-CIRCUIT.
3. ALL VOLTAGES ARE TYPICAL VALUES TAKEN WITH LOUDNESS FULLY CCW AND SWITCHES IN FM STEREO POSITION AND LOW LEVEL SWITCH OFF UNLESS SPECIFIED OTHERWISE WITH NO SIGNAL APPLIED.
4. VOLTAGES ON Q6 WILL VARY WITH SIGNAL.

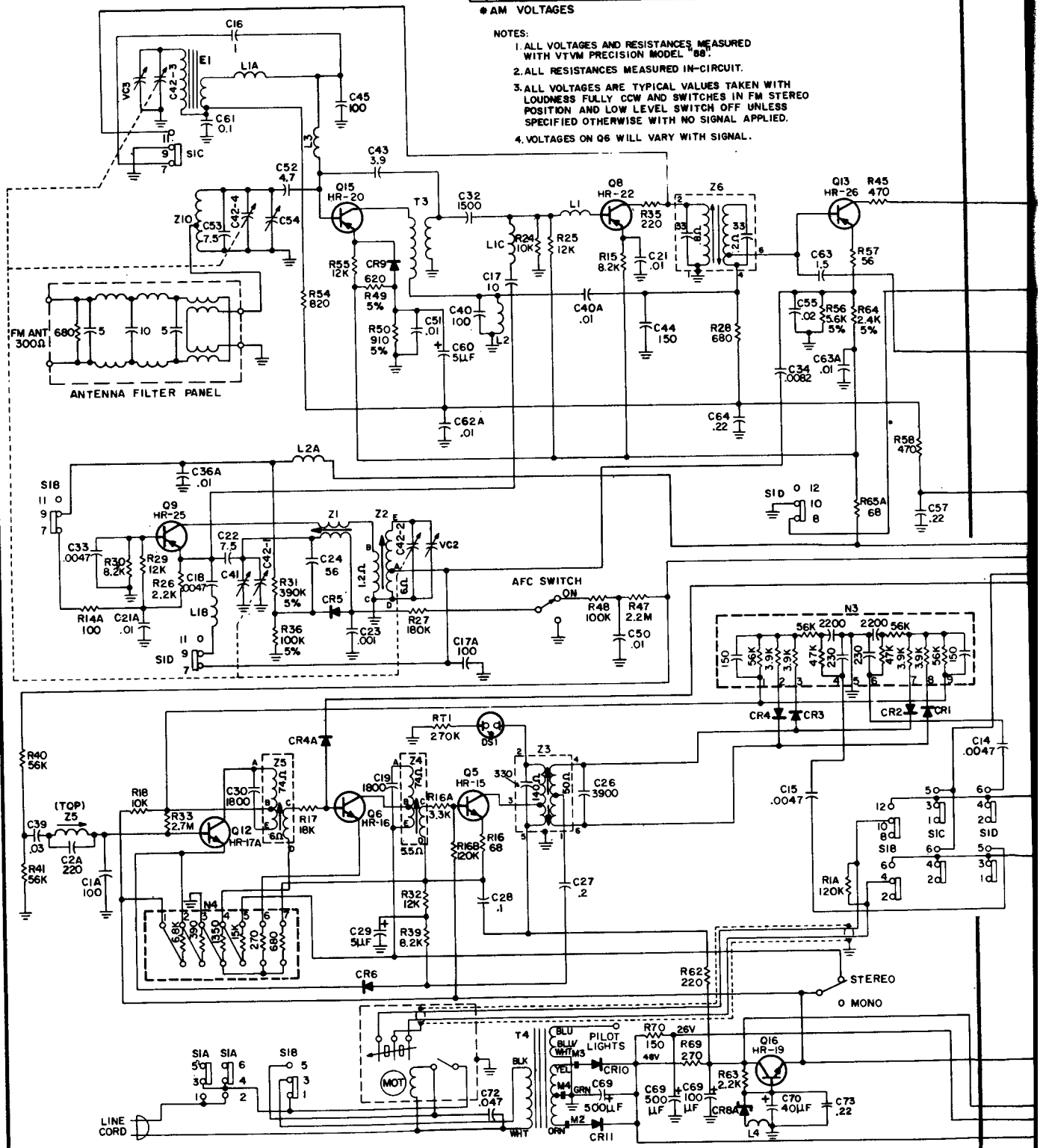


**Schematic Diagram P25ST Code 124 Chassis**

## PHILCO Chassis P25ST, Models P1710, P1719, P1722, P1735, P1737, Continued

### ALL TRANSISTOR TUNER/AMPLIFIERS

**RF SHIELD REMOVAL:** (RF Tuning Section) Top & Bottom

NOTE: Two types of RF shields were used on these chassis.

Type 1 - Top shield with a removable cover. The mounting studs are part of the top shield with mounting nuts on bottom of PW panel.

Type 2 - Top shield without a removable cover. The mounting studs are part of the bottom shield with mounting nuts on top of PW panel.

To remove type 1 top shield:

1. Remove 3 nuts holding bottom shield.
2. Unsolder ground tab and remove bottom shield.
3. Remove top cover.

To remove type 2 top shield:

1. Remove 3 nuts holding top shield.
2. Unsolder antenna lead from Gang and lift off top shield.
3. Remove 3 additional nuts on shield studs, unsolder ground tab and lift off bottom shield.

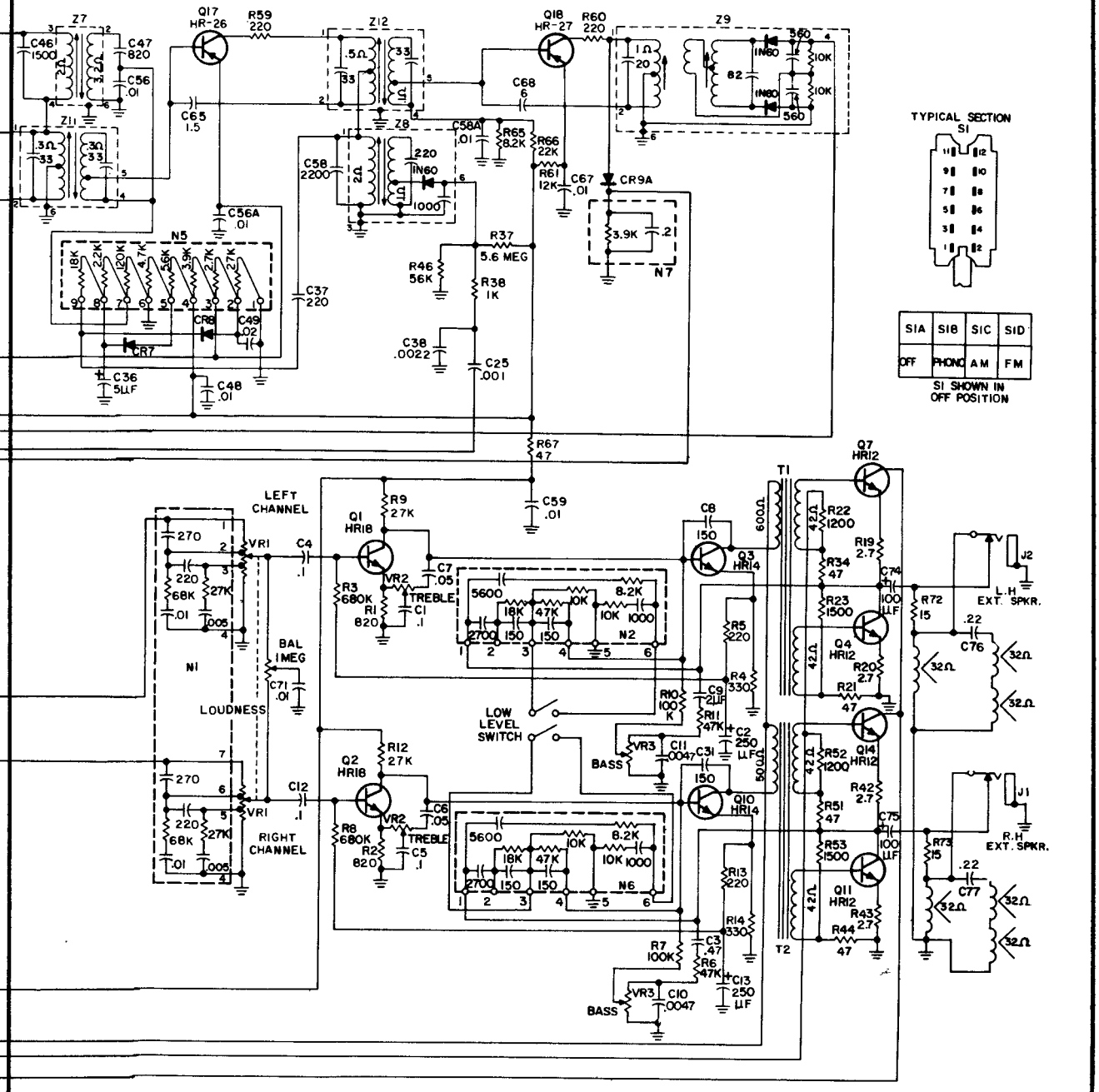




USE ONLY RECOMMENDED PHILCO EXTERNAL SPEAKERS, OTHERWISE EQUIPMENT DAMAGE MAY RESULT.

## PHILCO Model P1441

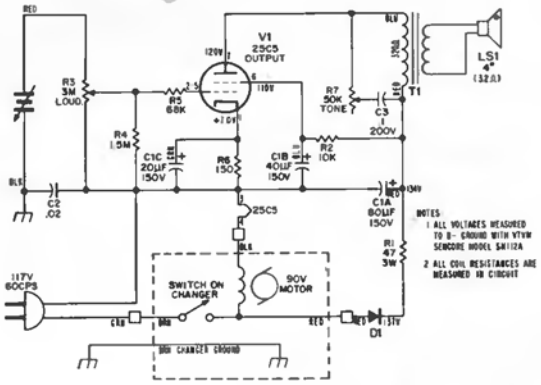


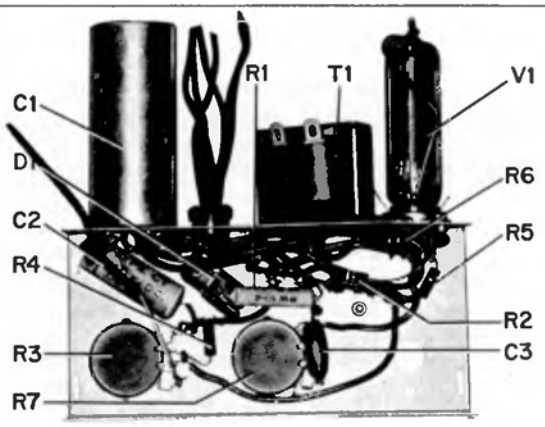


Model P1441 Bottom View - Component Layout

### CHASSIS REMOVAL - MODEL P1441

1. Remove 6 panel (motorboard) screws, lift panel then disconnect 2 speaker leads and audio cables from changer.
2. Remove knobs (Tone & Loudness).
3. Remove bushing nuts from control shafts.
4. Lift panel and remove chassis.

### RECORD CHANGER REMOVAL - MODEL P1441

1. Remove 6 panel screws.
2. Lift front end of panel with changer and amplifier.
3. Disconnect power and audio leads.
4. Straighten changer mounting bolt clips then lift off record changer.

## PHILCO Model P1442

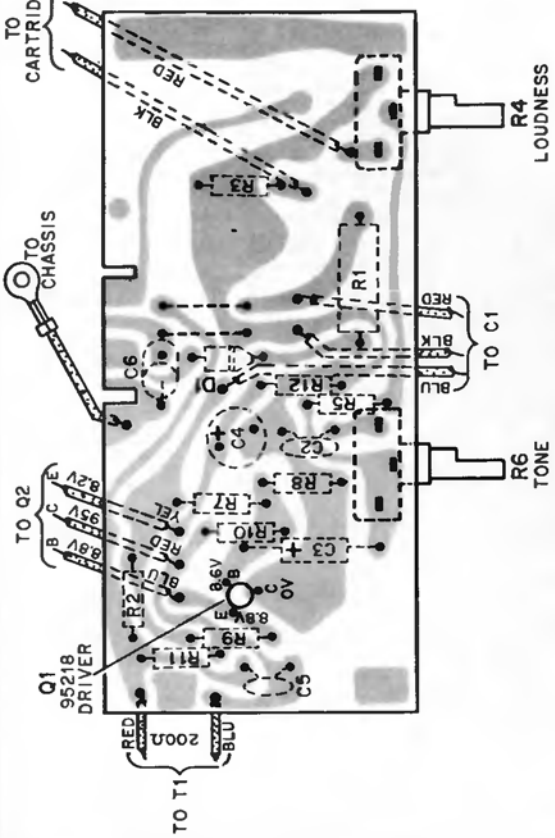


Bottom View Perma-Circuit Panel - Component Layout

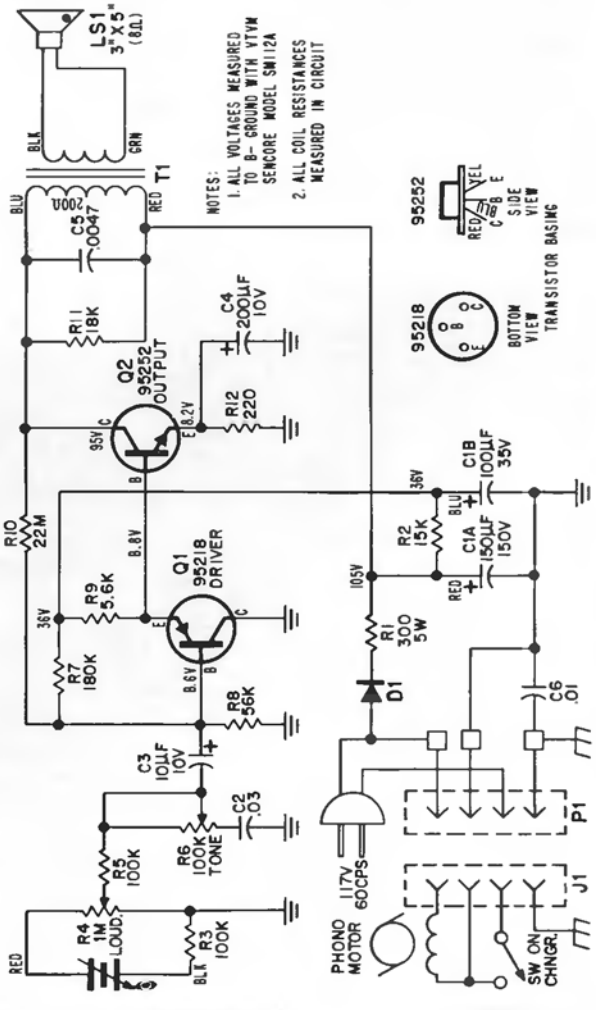


Model P1442 Schematic Diagram

## PHILCO Model P1444

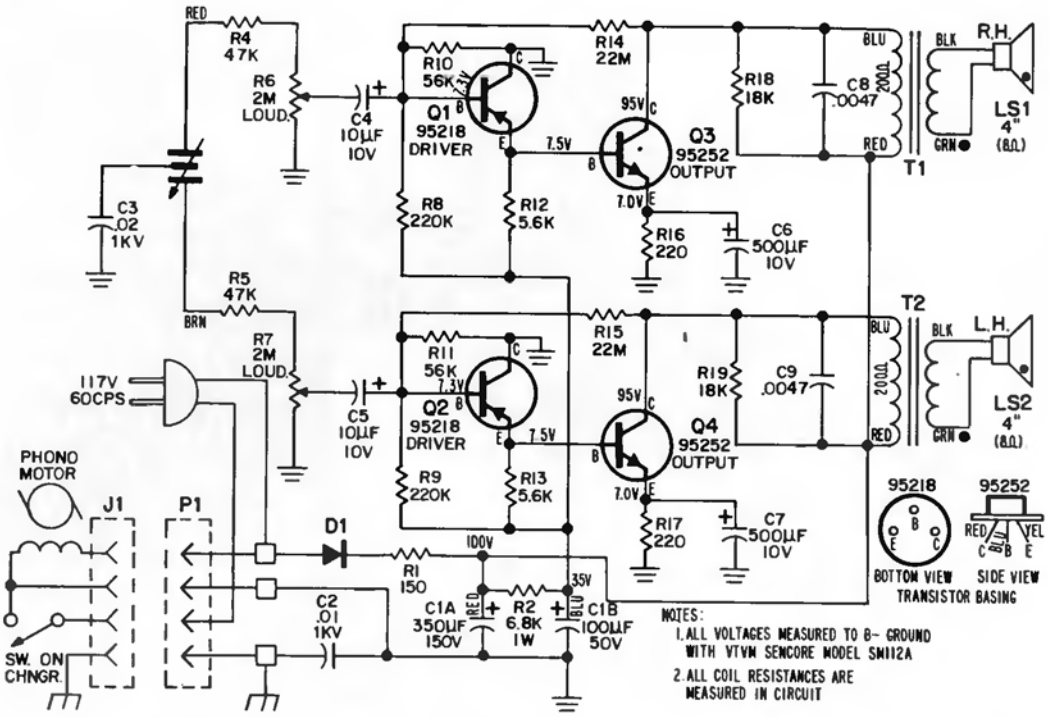


### RECORD CHANGER REMOVAL - MODEL P1444

1. Lower changer drawer and remove 4 screws holding record changer to base.
2. Lift front of record changer and disconnect changer power plug, unsolder 3 leads to termina' strip.
3. Lift record changer from base.

### CHASSIS REMOVAL-- MODEL P1444

1. Remove record changer (see record changer removal instructions).
2. Remove 2 knobs (Loudness).
3. Disconnect panel plug at rear of chassis panel and unsolder speaker leads from output transformer.
4. Remove 2 chassis hold down screws (one located at each end of chassis), lift chassis from base.

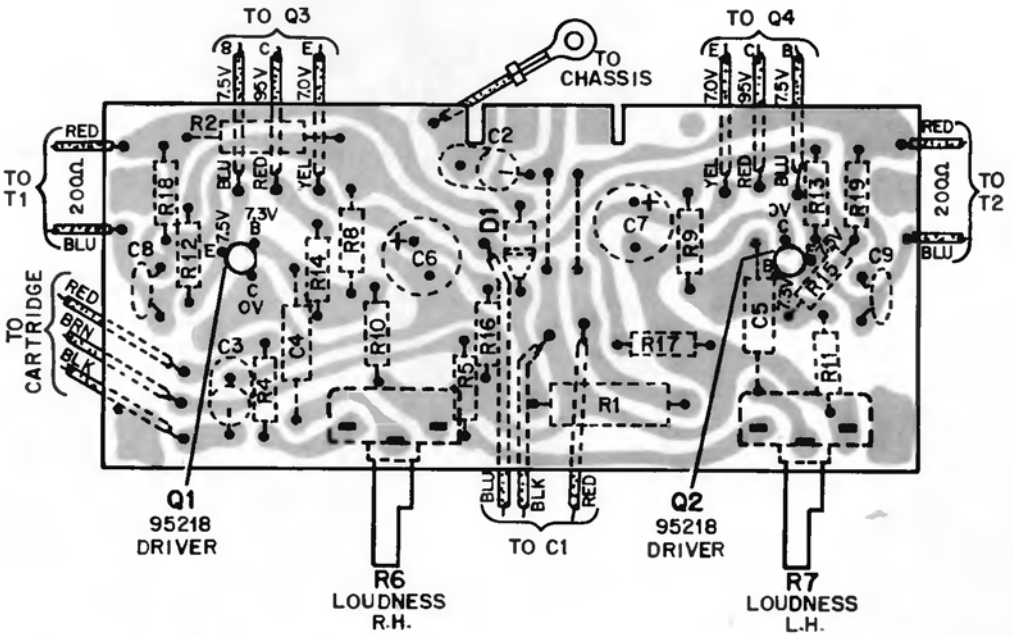


Model P1444 Bottom View Perma-Circuit Panel - Component Layout

## PHILCO Model P1445

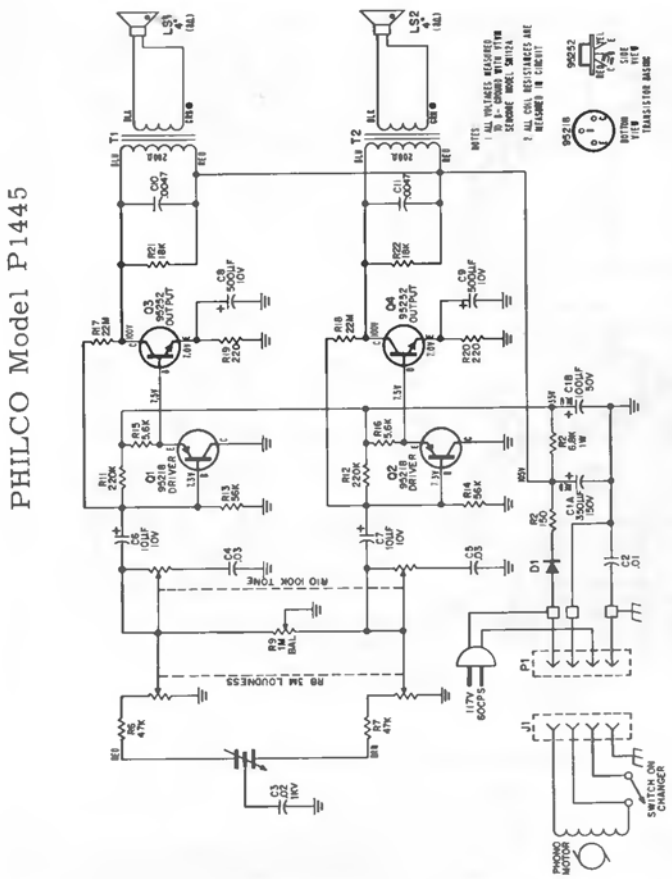


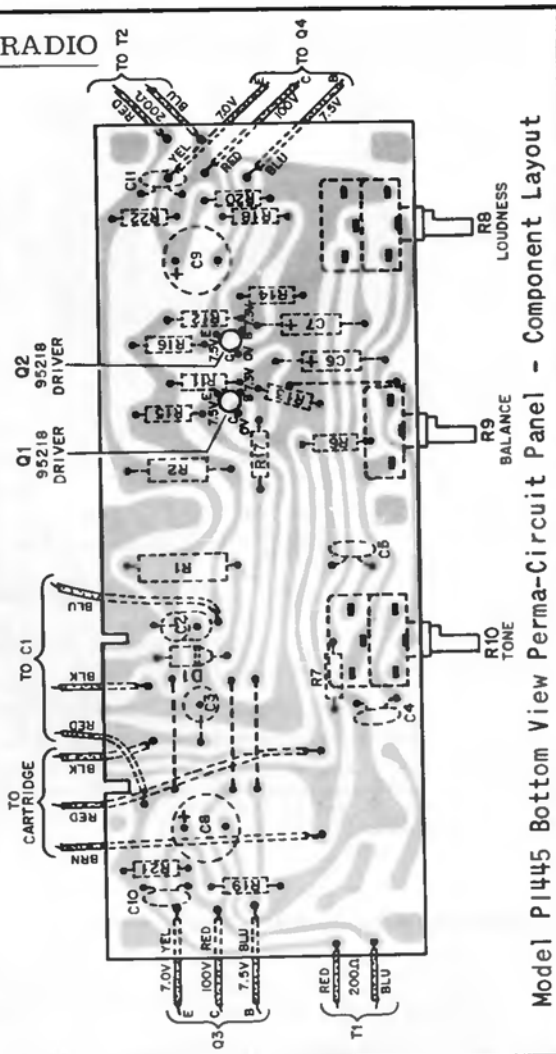


## PHILCO Model P1446

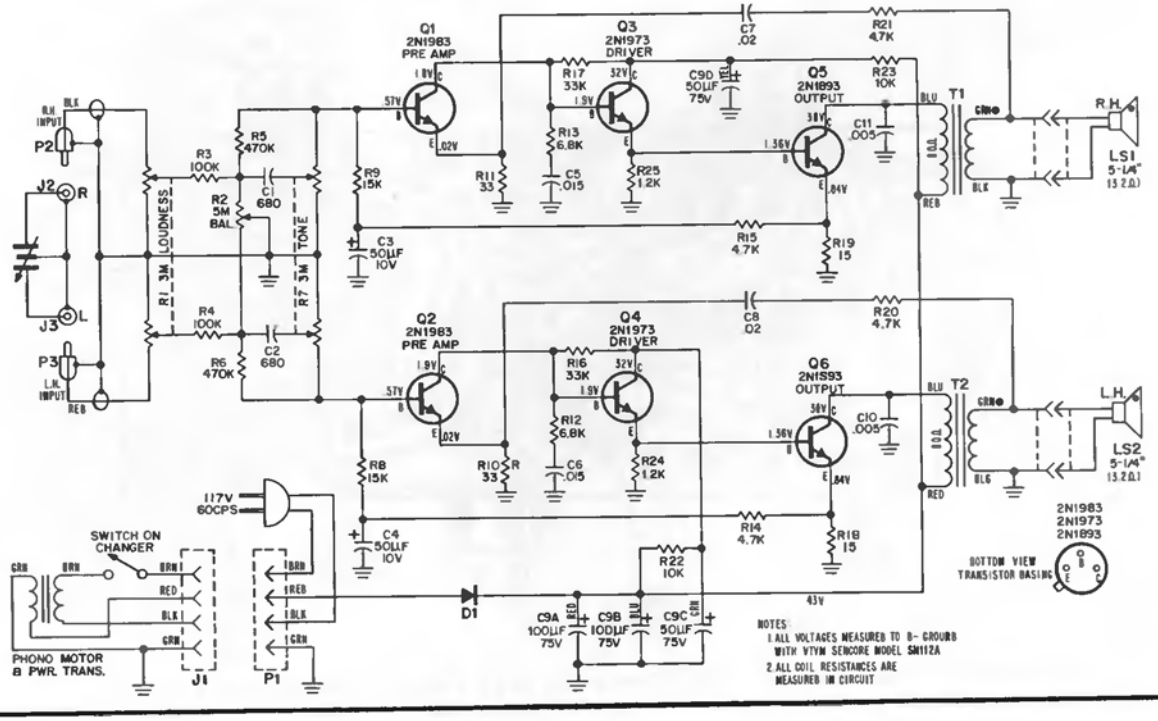

# PHILCO Model P1511

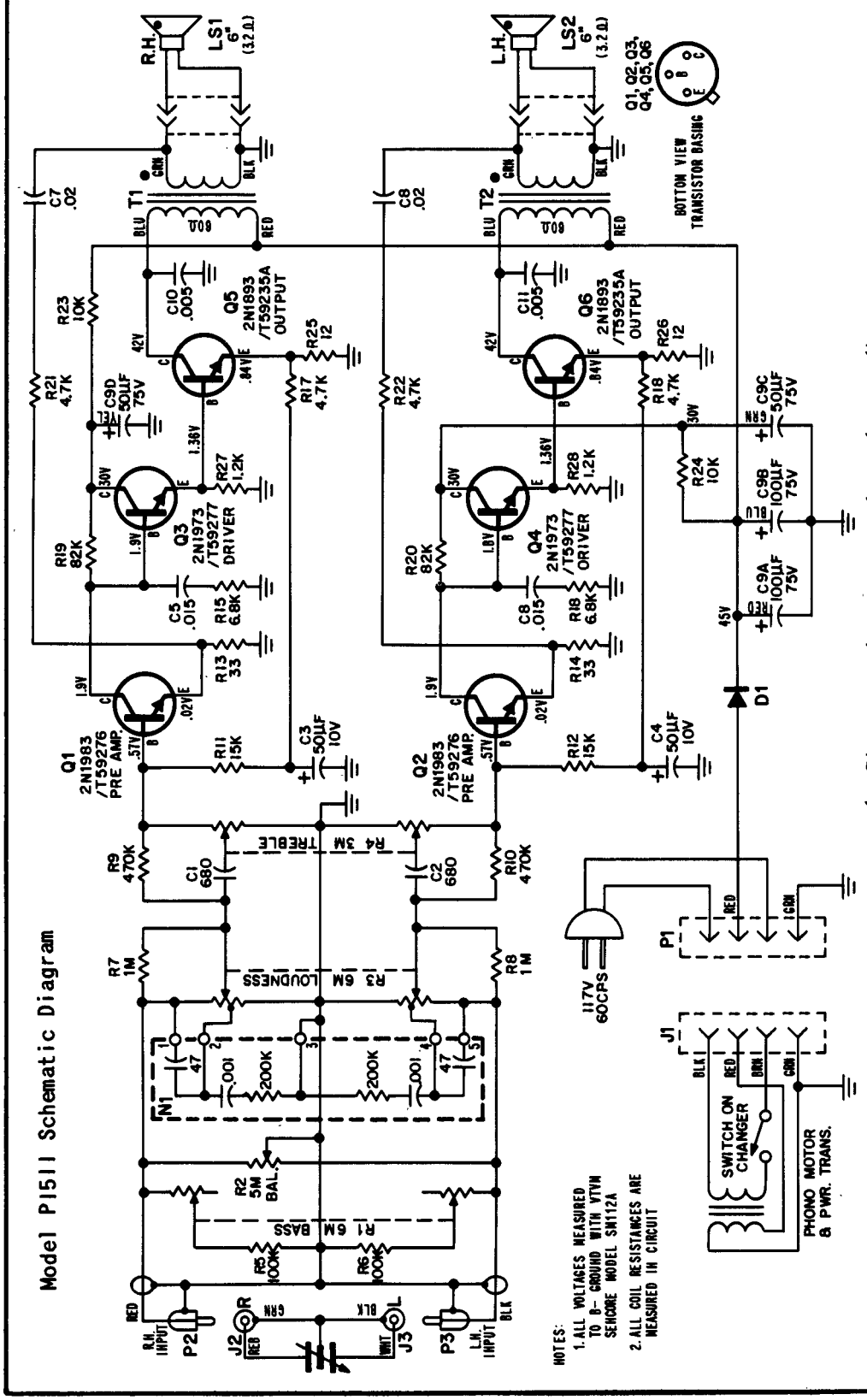


## TRANSISTOR VOLTAGES

| | | C | B | E |
|---|---|---|---|---|
| PRE AMPS | Q1 – Q2 | 1.9V | .57V | .02V |
| DRIVERS | Q3 – Q4 | 30V | 1.9V | 1.36V |
| OUTPUTS | Q5 – Q6 | 42V | 1.36V | .84V |

## RECORD CHANGER REMOVAL – MODELS P1446 & P1511

1. Lower record changer drawer and remove plug button located at right hand side of changer base.
2. Insert screwdriver through hole at right hand side and straighten mounting bolt clip. (Changer mounting bolts must be screwed down.)
3. Lift changer slightly with the right hand and then with the thumb and forefinger of left hand pull changer mounting spring (located near front left corner of base plate) to free it from spring clip on motorboard.
4. Disconnect changer power plug and two audio plugs (red & black).
5. Lift changer forward and slide rear end to the right to release mounting bolt at left rear of base plate.

## CHASSIS REMOVAL – MODELS P1446 & P1511

1. Remove rear access panel (4 screws).
2. Remove cable hold down clips.
3. Remove knobs (Balance, Tone, Loudness & Treble).
4. Remove bushing nuts (3) from control shafts.
5. Lift chassis out from rear of cabinet.
6. Disconnect cables as necessary

## PHILCO Models P1513, P1515

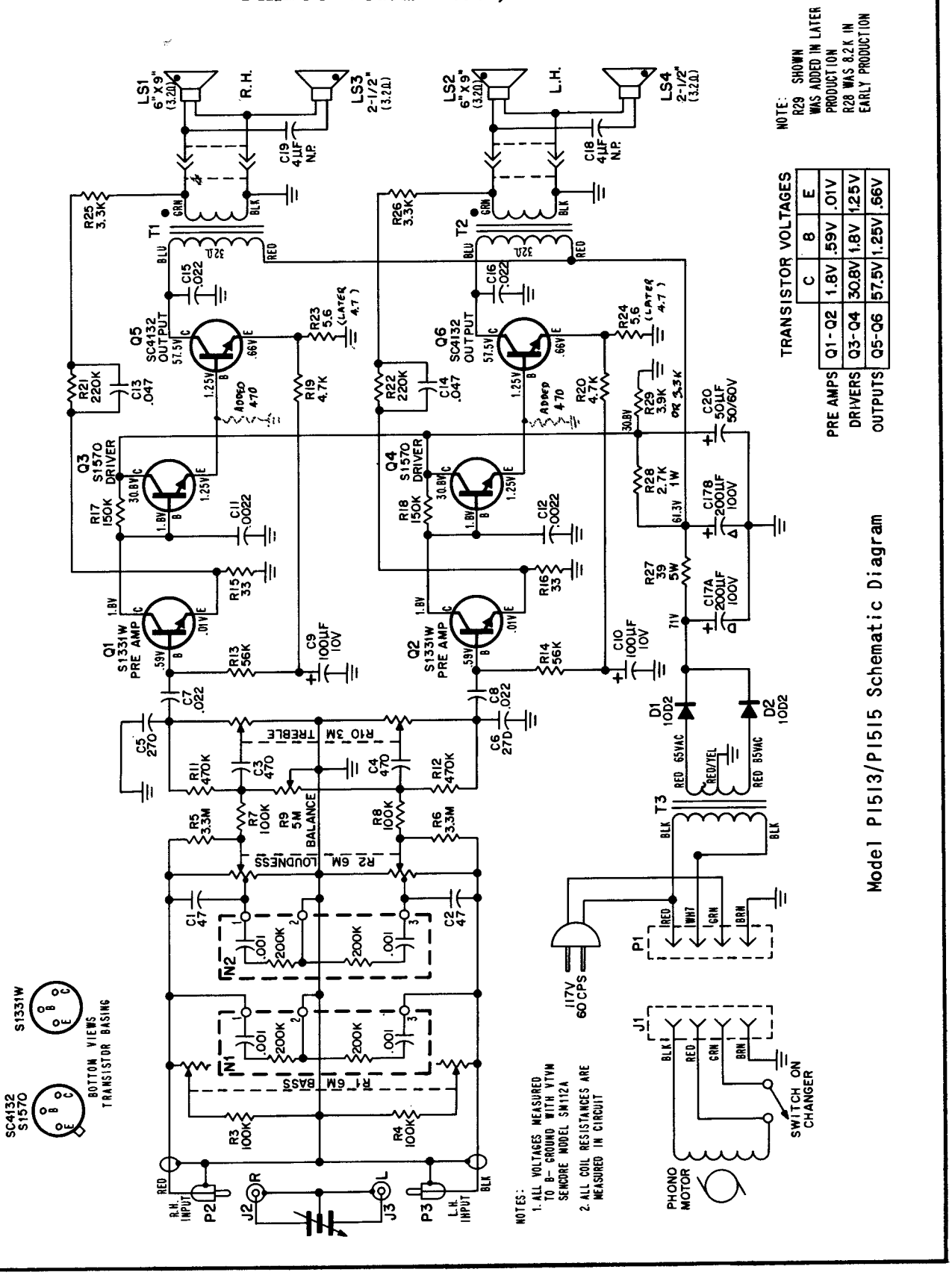

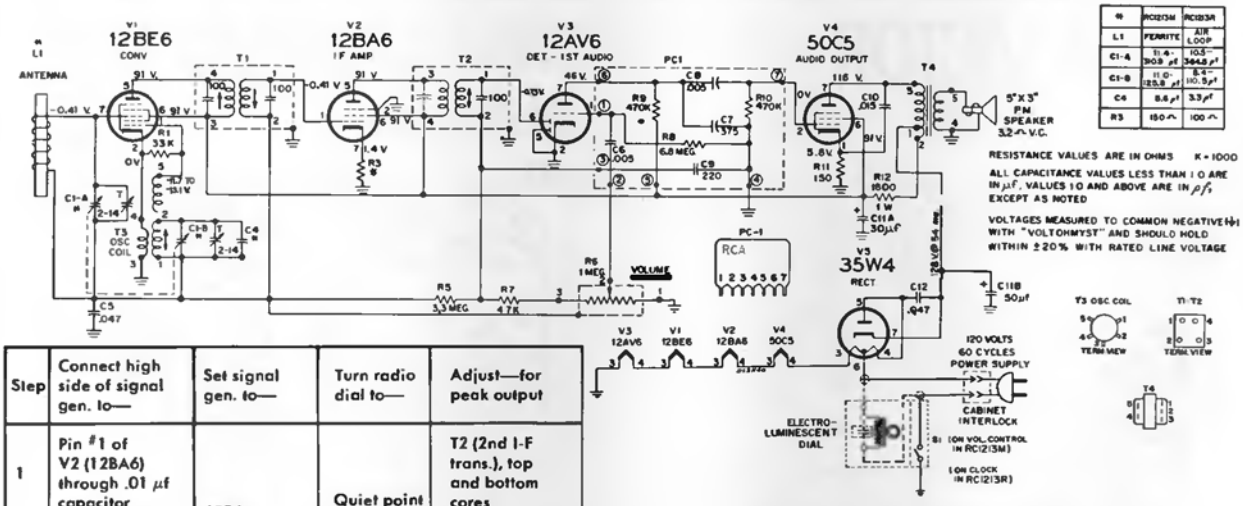


| Step | Connect high side of signal gen. to— | Set signal gen. to— | Turn radio dial to— | Adjust—for peak output |
|---|---|---|---|---|
| 1 | Pin #1 of V2 (12BA6) through .01 μf capacitor | 455 kc (Modulated) | Quiet point near 1600 kc | T2 (2nd I-F trans.), top and bottom cores |
| 2 | Pin #7 of V1 (12BE6) through .01 μf capacitor | | | T1 (1st I-F trans.), top and bottom cores |
| 3 | Repeat steps 1 and 2 | | | |
| 4 | Short wire placed near antenna to radiate signal | 1620 kc (Modulated) | Gang fully open | C1-B-T (osc. trimmer) |
| 5 | | 1400 kc (Modulated) | 1400 kc signal | C1-B-T (Ant. trimmer) |
| 6 | | 600 kc (Modulated) | 600 kc signal | T3 (osc. coil) (rock gang) |
| 7 | Repeat steps 3, 4 and 5 | | | |

# RCA VICTOR

This is exact material for the following: RGA-27 Series, Chassis RC-1213R; RGD-30 Series, Chassis RC-1213M; and this group of sets are very similar: RHA-12G, N, Y, RHA-17A, E, J, RC-1213W; RHD-13N, Y, RHD-17A, J, Y, using Chassis RC-1213AB; RHD-21A, J, T, using Chassis RC-1213AA.

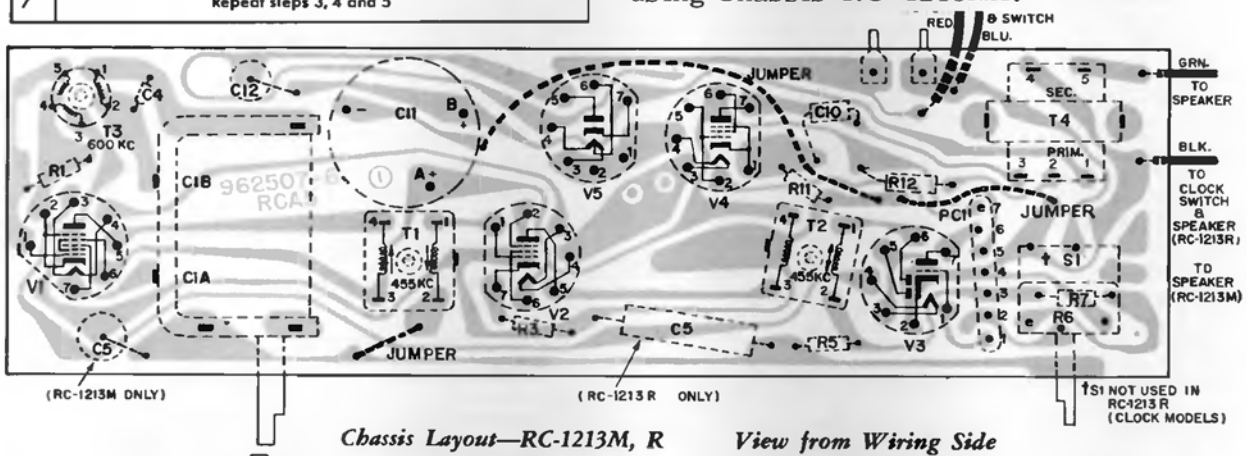


*Chassis Layout—RC-1213M, R* *View from Wiring Side*

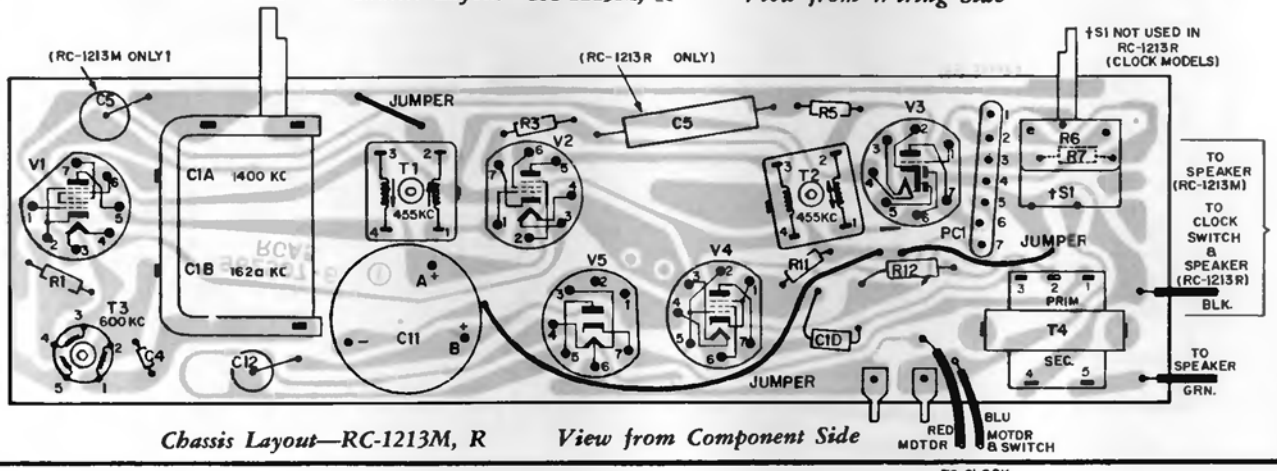


*Chassis Layout—RC-1213M, R* *View from Component Side*

# RCA VICTOR

Models RGG-17B, RGG-22A,N,U, RGG-25B,E,G
Chassis RC-1219A, RC-1219B

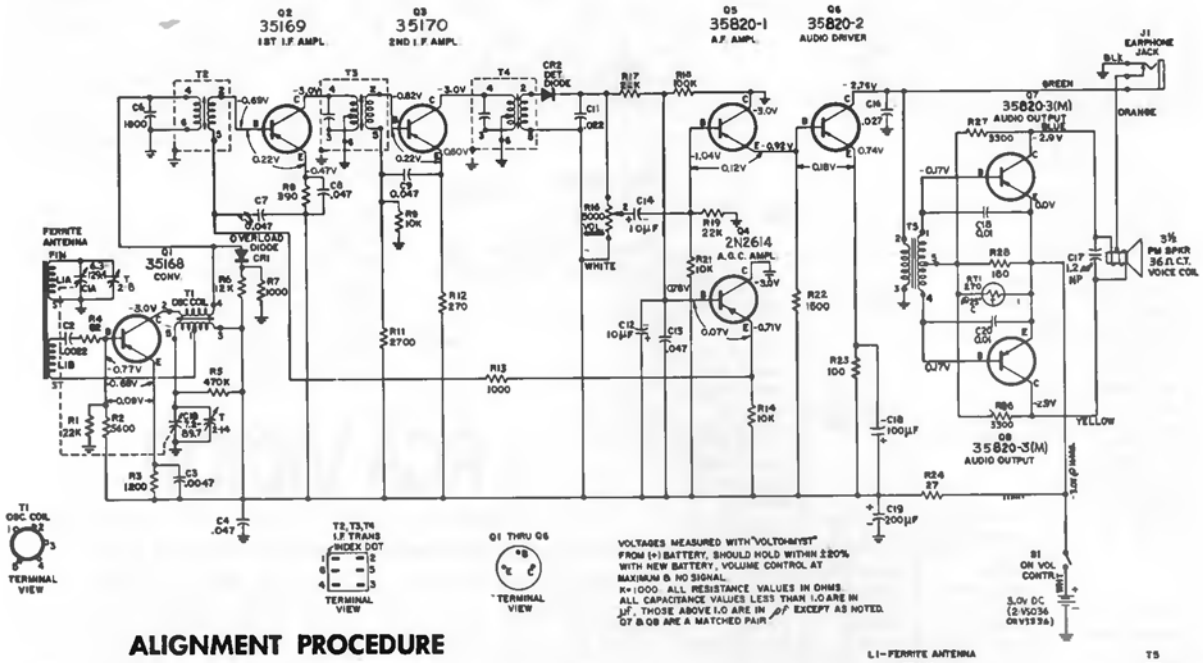


## ALIGNMENT PROCEDURE

| Step | Connect High Side of Signal Generator to— | Signal Gen. Output | Dial Pointer Setting | Adjust for Max. Output |
|---|---|---|---|---|
| 1 | Loop or piece of short wire placed near antenna for radiated signal | 455 kc | Gang fully open | T4 (3rd I-F) |
| 2 | | | | T3 (2nd I-F) |
| 3 | | | | T2 (1st I-F) |
| 4 | | Repeat Steps 1, 2, and 3 | | |
| 5 | | 1620 kc | Gang fully open | Oscillator trimmer C1B-T |
| 6 | | 1400 kc | 1400 kc (rock gang if necessary) | Antenna trimmer C1A-T |
| 7 | | 600 kc | 600 kc (rock gang) | Osc. coil T1 |
| 8 | | Repeat Steps 5, 6, and 7 | | |

## CHASSIS REMOVAL

1. Remove tuning and volume knobs.
2. Open case.
3. Remove three screws securing chassis. (Two at battery end of board and one at speaker end.)
4. Remove nut holding earphone jack (RC-1219B) or slide earphone jack out of slot (RC-1219A).
5. Unsolder speaker wires if necessary (or remove clips holding speaker to case).
6. Unsolder battery wires if necessary.
7. Lift board out of case.

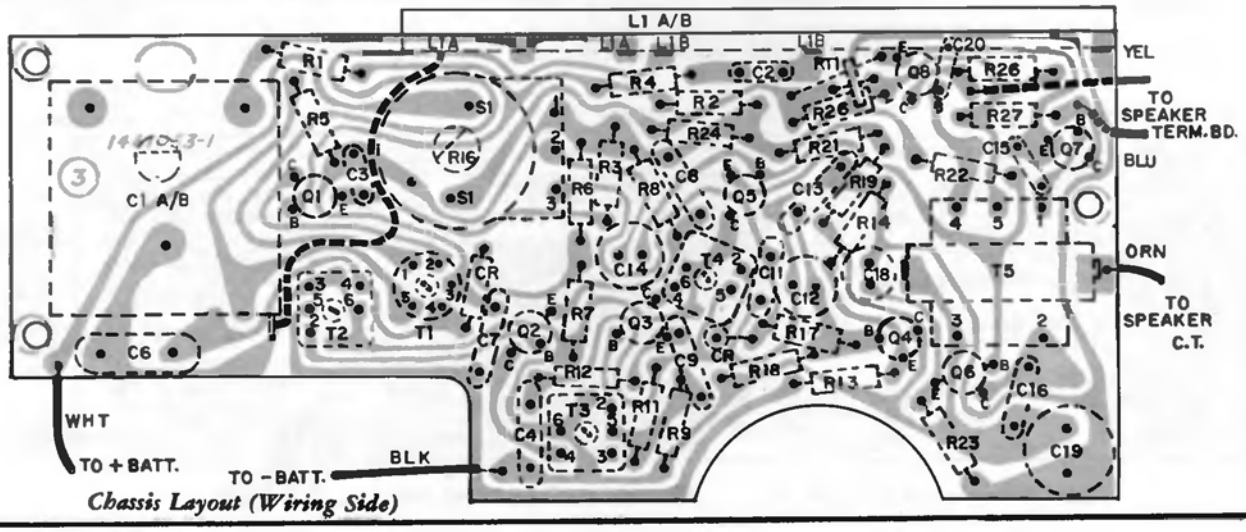


*Chassis Layout (Wiring Side)*

# RCA VICTOR

## RHG 21 Series
## RHG 25 Series

### Chassis RC-1219D

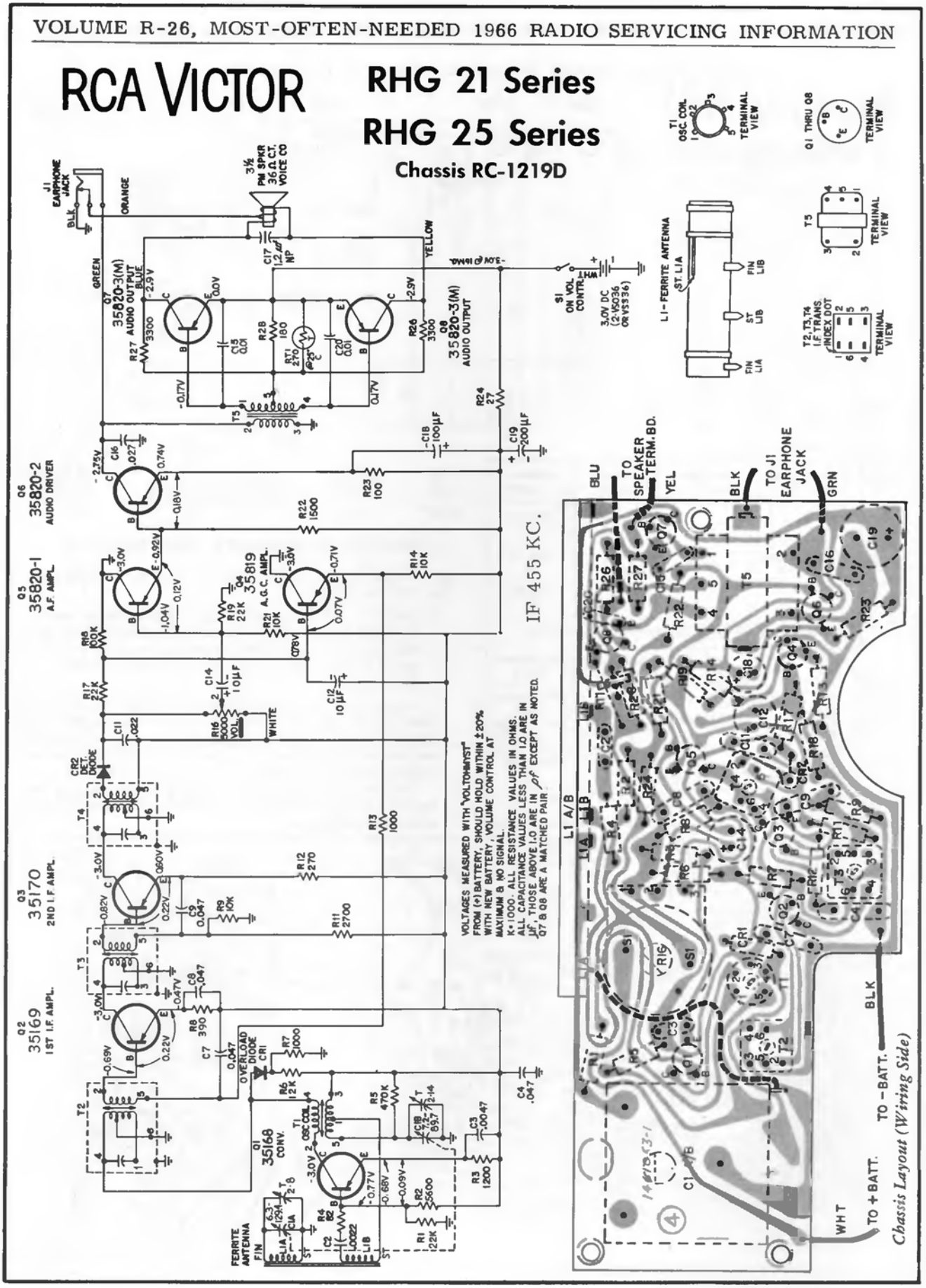

## RCA Victor Model RGG-29E, Chassis RC-1221A

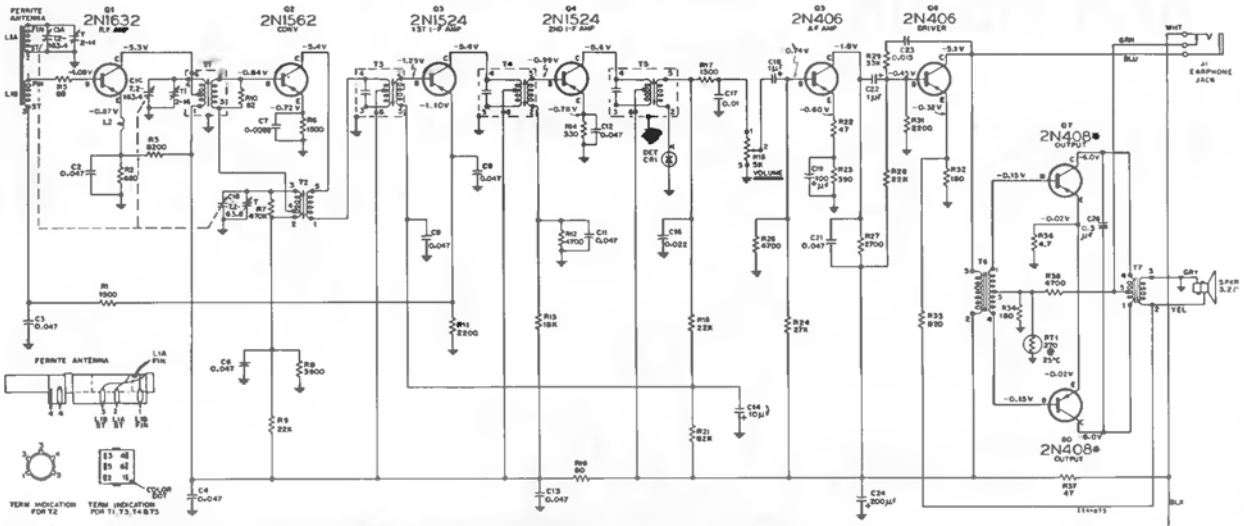


| Step | Connect Signal Source To— | Set Signal Source To— | Set Radio Dial To— | Adjust— for maximum |
|---|---|---|---|---|
| 1 | Stator of C1A (RF Gang) through a 0.01 μf capacitor | 455 kc | Gang fully open | (3rd IF) T5 |
| 2 | | | | (2nd IF) T4 |
| 3 | | | | (1st IF) T3 |
| 4 | Repeat steps 1, 2 and 3 as necessary for maximum. | | | |
| 5 | Standard Loop or short piece of wire placed near antenna | 1620 kc | Gang fully open | (Osc. Trimmer) C1C-T |
| 6 | | 1400 kc | 1400 kc | (RF Trimmer) C1B-T |
| 7 | | | | (Ant. Trimmer) C1A-T |
| 8 | | 600 kc | 600 kc (rock gang) | (Osc. Coil) T2 |
| 9 | | | | (RF Trans.) T1 |

## CHASSIS ACCESSIBILITY AND REMOVAL

1. Unsnap the two tabs at the bottom of the back and swing the back cover out and up.
2. Insert cells, with button end (+) to the left, into the opening in the battery compartment. Slide one cell to the left and two to the right; the fourth cell is inserted by pushing the cells on the right against the spring pressure until the fourth cell slips into place in the opening.

The chassis may be made further accessible by removing the front panel from the case; remove three (3) screws through the bottom of the case and two (2) through the top (under the handle) to permit the front panel to slide out of the case. (NOTE: The three screws through the bottom of the case also secure the battery holder.)

The chassis may be removed from the front panel by removing the five (5) screws securing it to the front panel; two at each end and one at the approximate center.

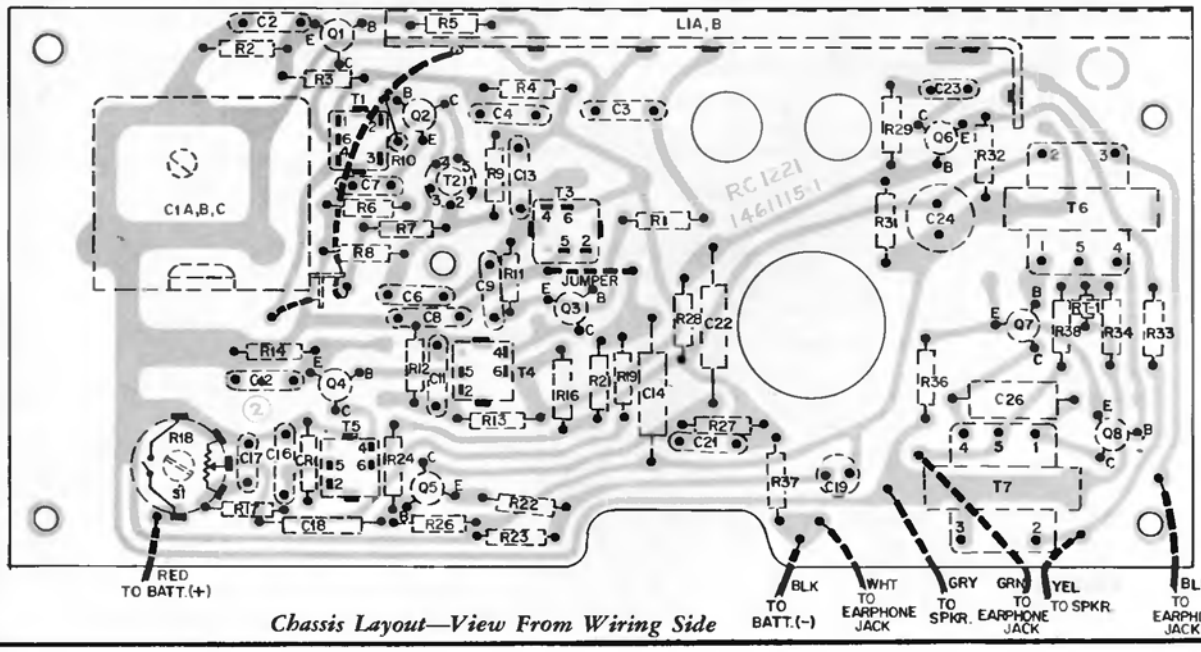


*Chassis Layout—View From Wiring Side*

# RCA VICTOR

## Chassis RC-1221B

### Model RHG 30E—Black

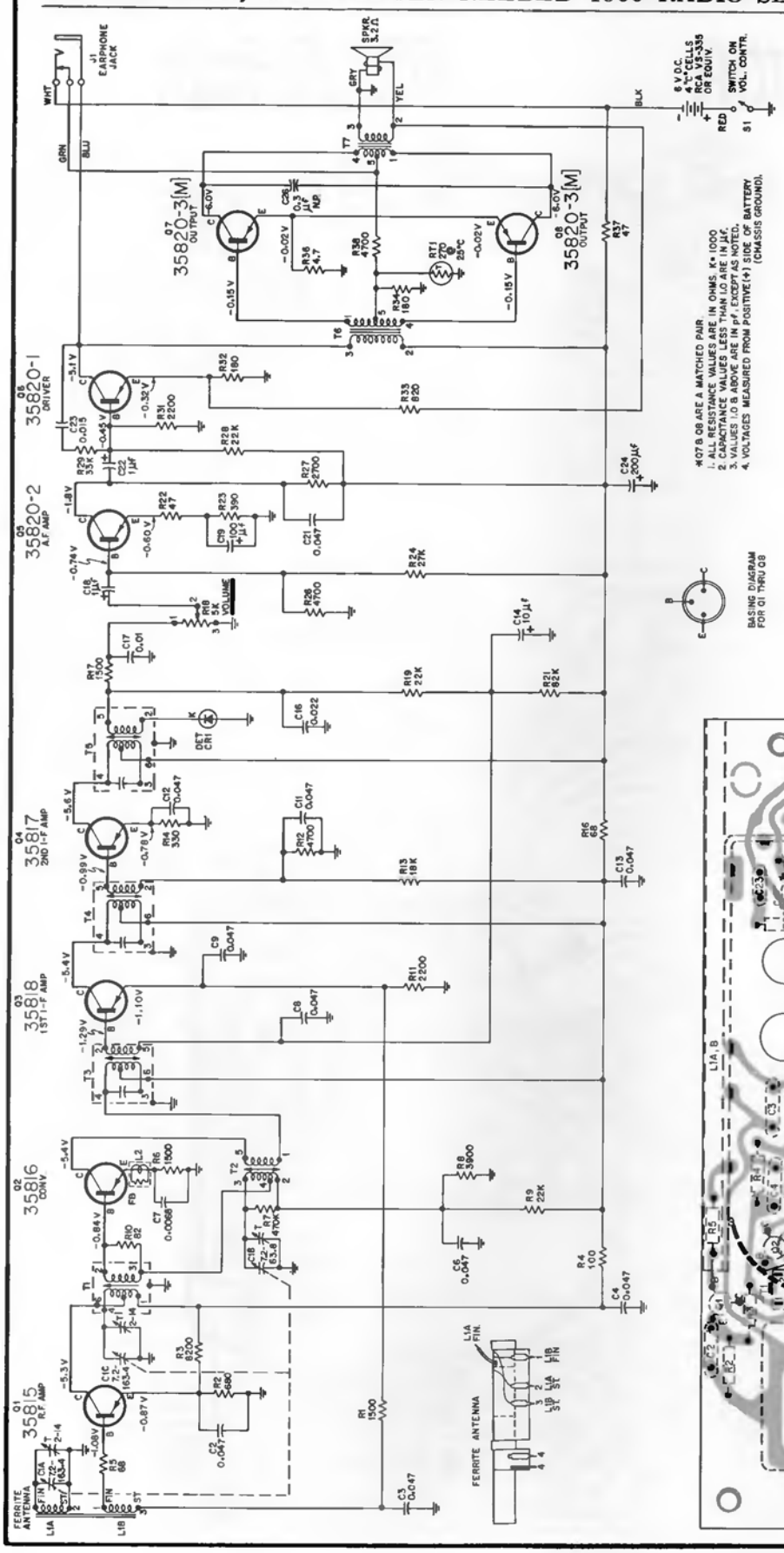


## I. F. Alignment Information

| Step | Connect Signal Source To— | Set Signal Source To— | Set Radio Dial To— | Adjust— for maximum |
|---|---|---|---|---|
| 1 | Stator of C1A (RF Gang) through a 0.01 μf capacitor | 455 kc | Gang fully open | (3rd IF) T5 |
| 2 | | | | (2nd IF) T4 |
| 3 | | | | (1st IF) T3 |

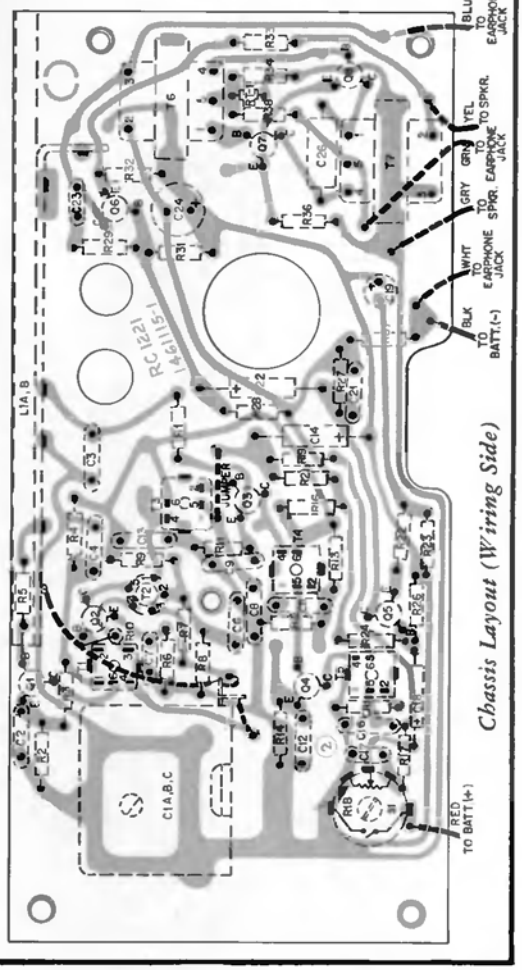


*Chassis Layout (Wiring Side)*

# RCA VICTOR

## RGH 12 Series

### Chassis RC-1222A

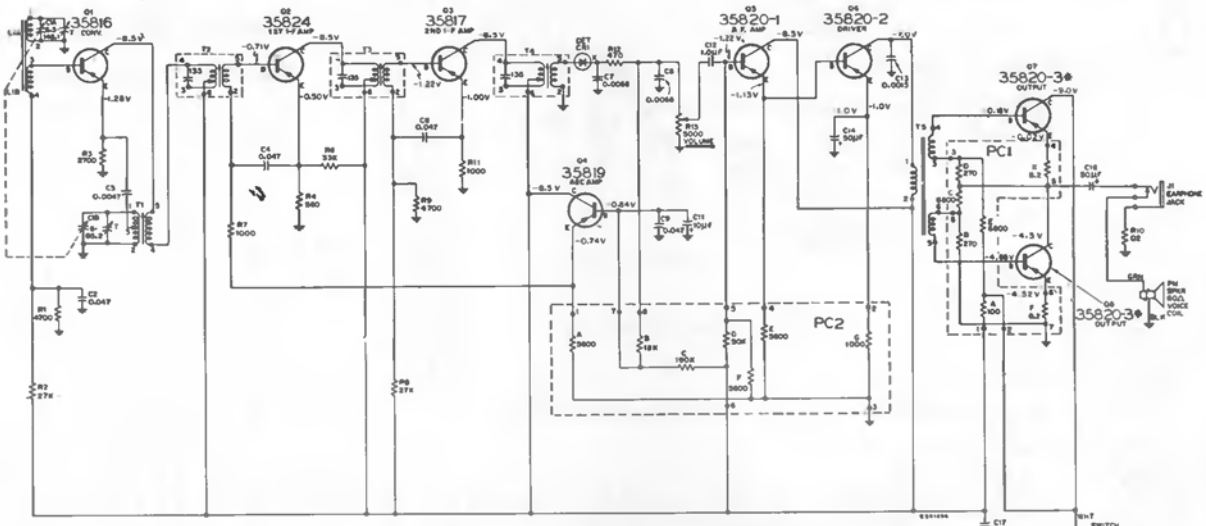


Q7 & Q8 ARE A MATCHED PAIR

1. ALL RESISTANCE VALUES ARE IN OHMS K=1000
2. CAPACITANCE VALUE LESS THAN 10 ARE IN µf, VALUES 10 & ABOVE ARE IN pf EXCEPT AS NOTED.
3. VOLTAGES MEASURED WITH A "VOLTOHMYST" FROM POSITIVE (+) SIDE OF BATTERY WITH NO SIGNAL (CHASSIS GROUND).

| | | |
|---|---|---|
| Collector | Q7 - -9.0v | Q8 - -4.5v |
| Base | Q7 - -4.68v | Q8- -0.18v |
| Emitter | Q7 - -4.52v | Q8 - -0.02v |

### BATTERY REPLACEMENT

1. Insert a coin in the slot on the top of the case and twist it to pry the front and back section apart.
2. Remove the back by swinging it open as though it were hinged at the bottom.
3. Replace the battery by snapping the connector off the old battery and onto the new one. (Note the polarized terminals.)
4. Reassemble the case by placing the bottom of the back section into the bottom of the front section and hinge the back section up into the front section and snap them together. (Small bosses on the top and bottom edges of the back section fit into small indentations inside of the edge of the front section.)

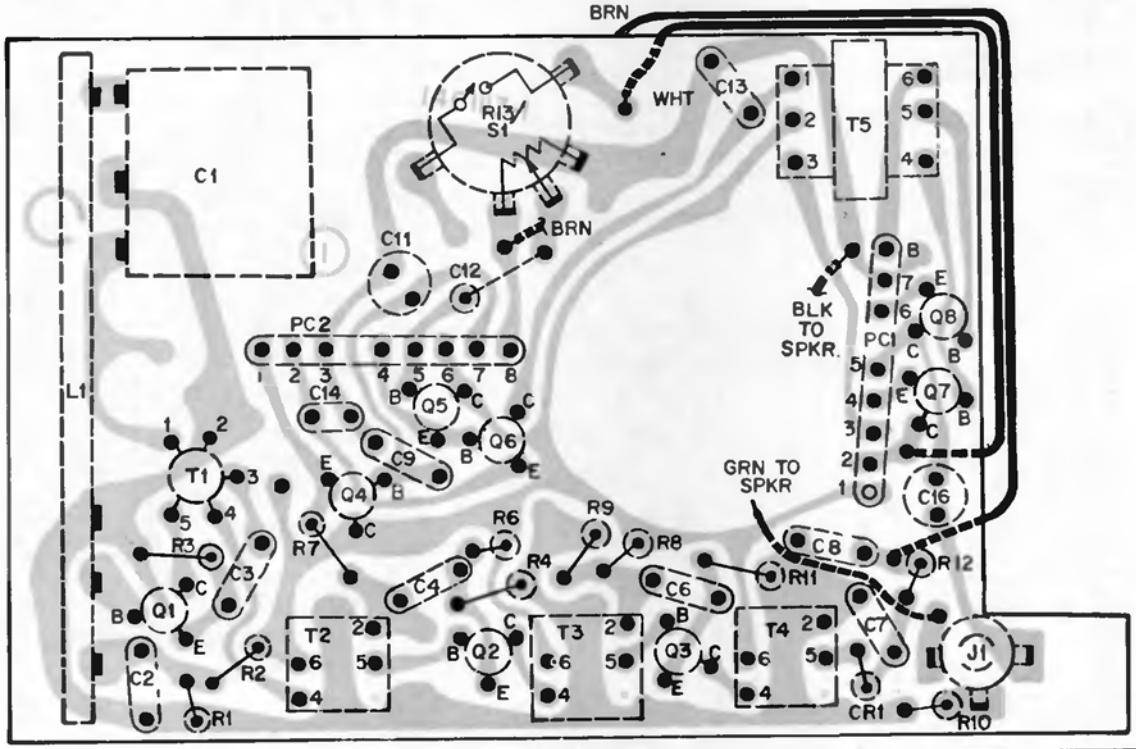


*Wiring Side*

# RCA VICTOR

## RHH 17 Series

### Chassis RC-1222A

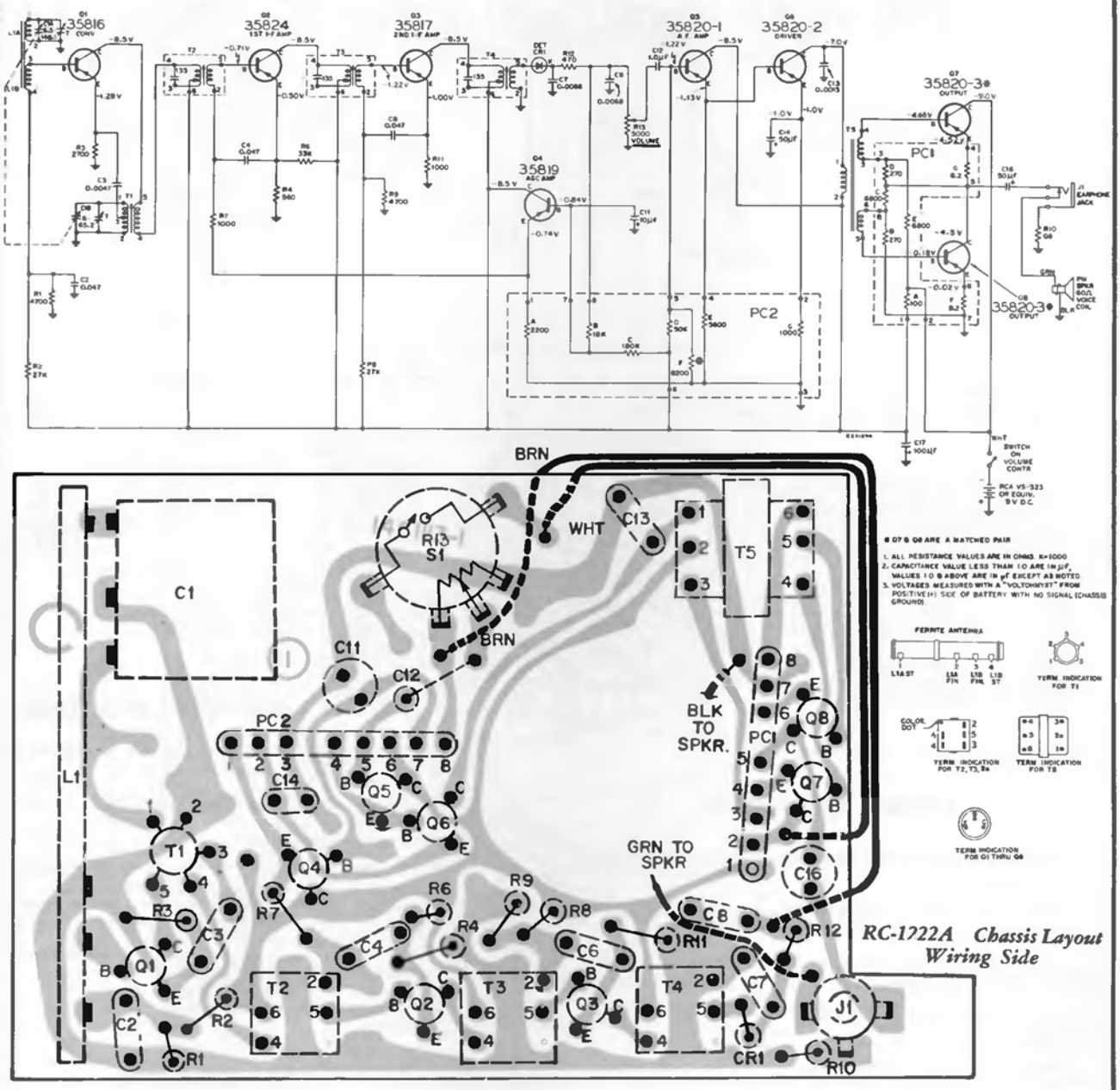


*RC-1222A Chassis Layout Wiring Side*

## BATTERY REPLACEMENT

1. Insert a coin in the slot on the top of the case and twist it to pry the front and back section apart.
2. Remove the back by swinging it open as though it were hinged at the bottom.
3. Replace the battery by snapping the connector off the old battery and onto the new one. (Note the polarized terminals.)
4. Reassemble the case by placing the bottom of the back section into the bottom of the front section and hinge the back section up into the front section and snap them together. (Small bosses on the top and bottom edges of the back section fit into small indentations inside of the edge of the front section.)

IF 455 KC.

## CHASSIS REMOVAL

1. Open case as described under "Battery Replacement."
2. Remove three (3) screws holding circuit board to case.
3. Unfold wires to speaker.
4. Lift up transformer side of circuit board and slide board sideways out of case. (Speaker wires are long enough to permit chassis to be laid outside of case for servicing. If necessary to separate the chassis and speaker, the speaker leads should be unsoldered from the board to avoid damaging the voice coil leads of the speaker.)

## RCA Victor Models RGA-39W, RGA-40W, Chassis RC-1224

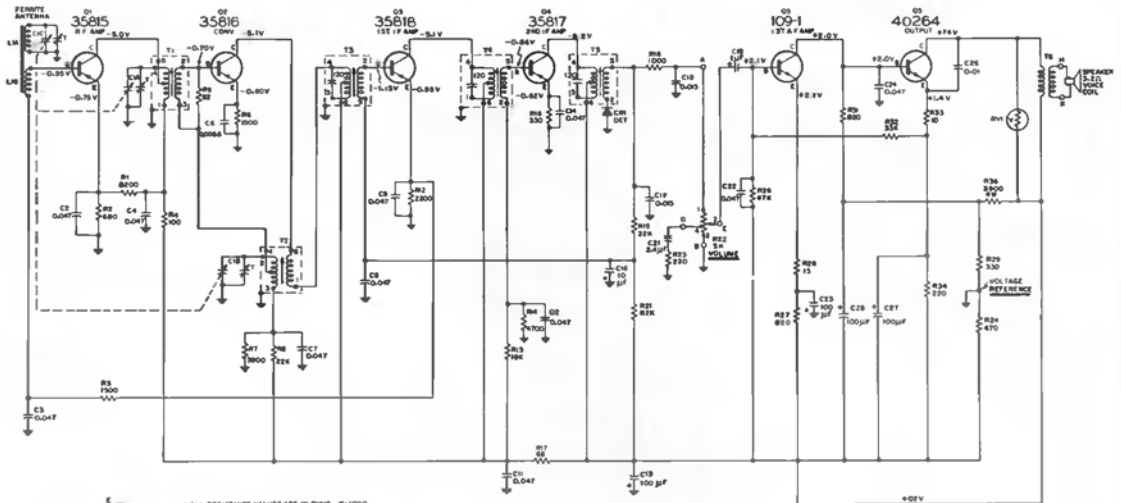


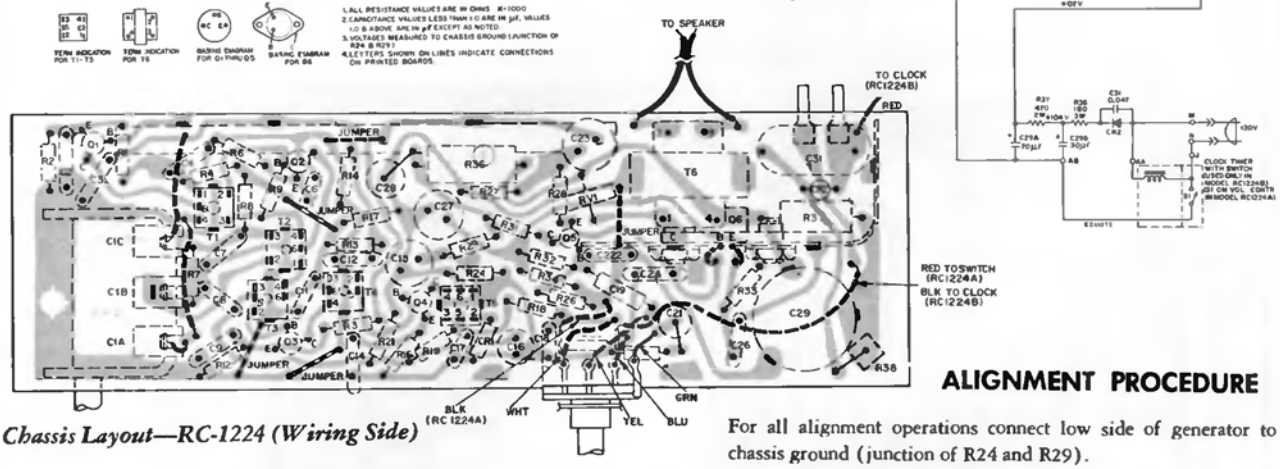


*Chassis Layout—RC-1224 (Wiring Side)*

## CHASSIS ACCESSIBILITY

1. Remove four Phillips head screws holding the rear cover. Remove the rear cover.
2. Remove two Phillips head screws retaining the tuning panel to the front of the cabinet.
3. Remove two Phillips head screws holding chassis retaining tabs located at rear of cabinet.
4. Slide chassis rearward to remove. If necessary, unsolder speaker leads.

To reassemble—reverse above procedure.

### Oscillation on Strong Signal

In a strong signal area an oscillation may be set up which will manifest itself by clamping of the A.G.C. and by causing a reverse bias to exist between the base and emitter of Q3, the first IF transistor.

This condition may be corrected by installing a ferrite bead on the emitter lead of Q4, the second IF transistor. The installation of the bead is accomplished by unsoldering the emitter lead of Q4, slipping the lead through the hole in the bead, and reinserting and resoldering the lead in the board.

The ferrite bead is available from Parts and Accessories under stock number 116761.

## ALIGNMENT PROCEDURE

For all alignment operations connect low side of generator to chassis ground (junction of R24 and R29).

Connect output indicator across speaker voice coil.

Set volume control to maximum.

| Step | Connect high side signal gen. to— | Set signal gen. to— | Set radio dial to— | Adjust—for maximum output |
|---|---|---|---|---|
| 1 | Stator of C1A (RF gang) through a 0.01 mfd capacitor | 455 kc (Modulated) | tuning gang fully open | T5 (3rd IF) |
| 2 | | | | T4 (2nd IF) |
| 3 | | | | T3 (1st IF) |
| 4 | Short wire placed near antenna to radiate signal | 1620 kc (Modulated) | 1620 kc (gang open) | C1B-T (Osc. trimmer) |
| 5 | | 1400 kc (Modulated) | 1400 kc | C1A-T (RF trimmer) |
| 6 | | | | C1C-T (Ant. trimmer) |
| 7 | | 600 kc (Modulated) | 600 kc (rock gang) | T2 (Osc. coil) |
| 8 | | | | T1 (RF coil) |
| 9 | Repeat above steps as necessary for best sensitivity. | | | |

# RCA Victor Model RGH-10

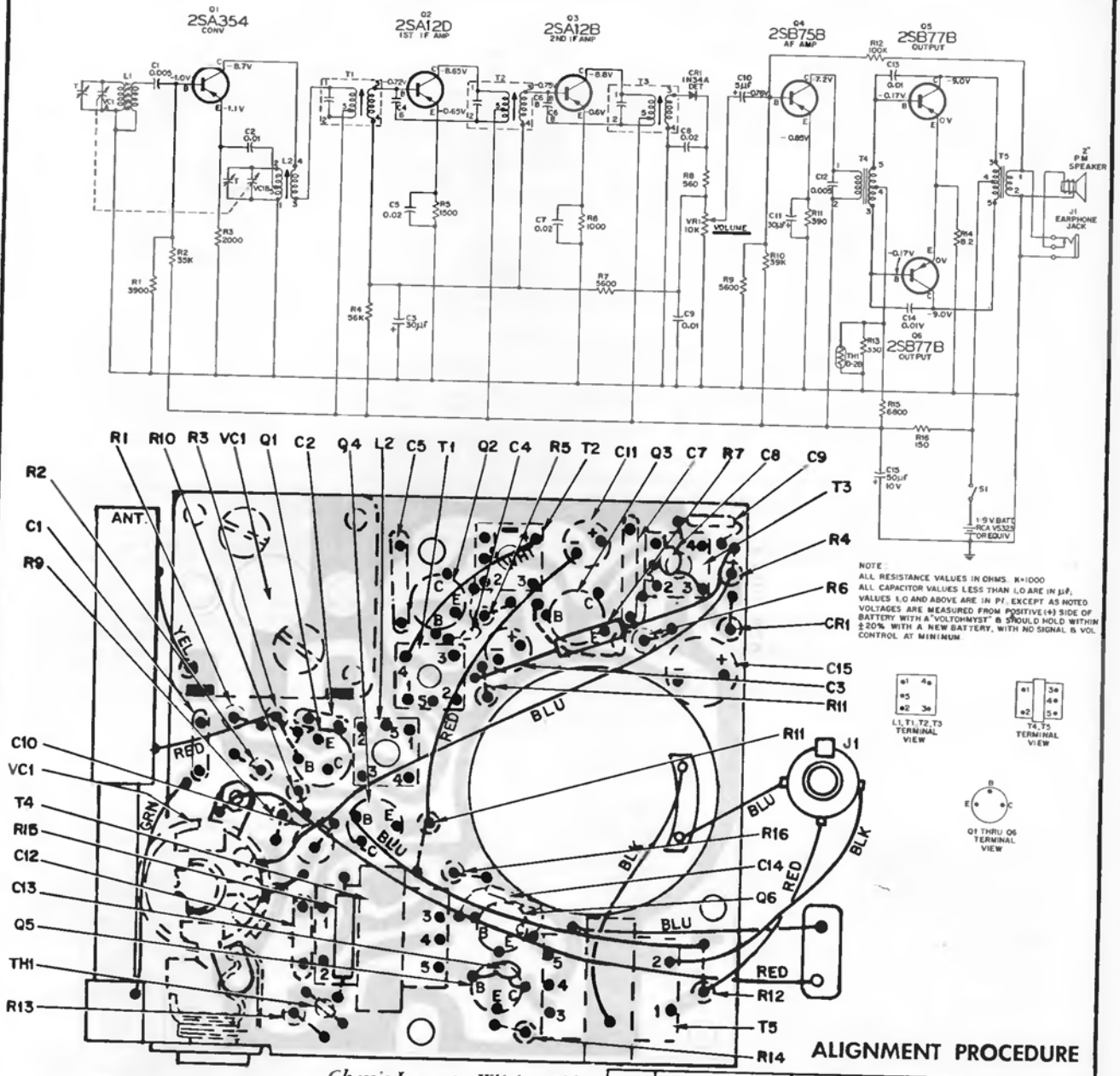


*Chassis Layout—Wiring Side*

The "Souvenir" is a pockette type transistorized radio receiver designed for the reception of AM broadcasts in the range from 520 kc to 1680 kc. It is housed in a vertically styled case small enough to fit into a shirt pocket.

## BATTERY REPLACEMENT

1. Grasp the front section of the case with the left hand and the back section with right hand with the thumbs near the volume control on the right side.
2. Separate the back from the front as though it were hinged at the left side.
3. Replace the battery by snapping the connector off the old battery and onto the new one.
4. Reassemble the case by placing the left side of the front and back sections together and closing them with a hinging action.

## ALIGNMENT PROCEDURE

| Step | Connect Signal Generator to— | Signal Gen. Output | Dial Pointer Setting | Adjust for Max. Output |
|---|---|---|---|---|
| 1 | Loop of wire placed near antenna for radiated signal | 455 kc | Gang fully open | T3 (3rd I-F) |
| 2 | | | | T2 (2nd I-F) |
| 3 | | | | T1 (1st I-F) |
| 4 | | Repeat Steps 1, 2, and 3 | | |
| 5 | | 1680 kc | Gang fully open | VC1B-T (Oscillator trimmer) |
| 6 | | 1400 kc | 1400 kc (rock gang) | VC1A-T (Antenna trimmer |
| 7 | | 600 kc | 600 kc (rock gang) | L2 (Osc. Coil) |
| 8 | | Repeat Steps 5, 6, and 7 | | |

# RCA Victor Models RGA-12Y, RGA-15A,R,Y, RGD-20N,R,Y, Chassis RC-1213A,-K

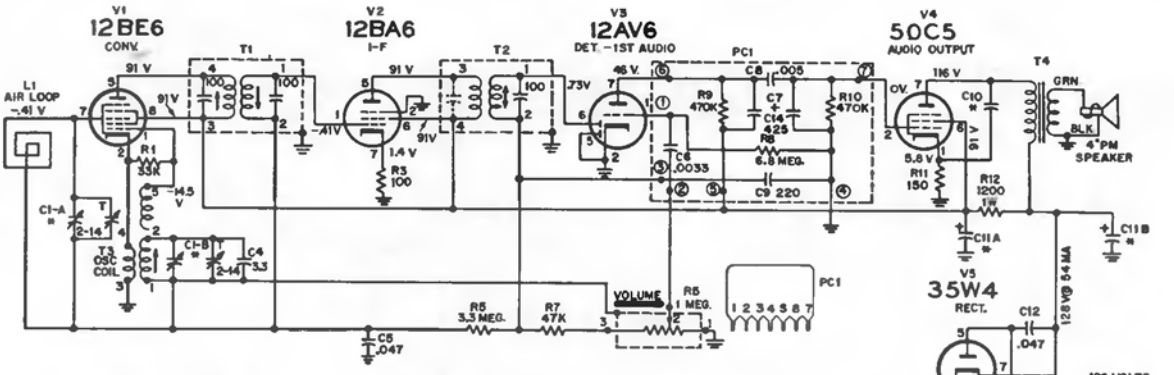


## TUBE AND CHASSIS ACCESSIBILITY

1. DO NOT ATTEMPT TO REMOVE THE KNOBS. The tuning and volume control knobs are held captive to the cabinet by retainers on their shafts.
2. Remove the back cover by lifting the protrusions on the bottom of the back cover out of the slots in the base of the cabinet.
3. Unsolder speaker leads if necessary. Avoid putting a strain on the speaker leads.
4. Remove two chassis retainers (screws or clips), one at the volume control and one of the left end mounting.
5. Grasp tuning capacitor and volume control, and pull chassis out of knobs and mounting slots.

To reassemble—reverse above procedure.

| * | CHASSIS RC-1213 A | CHASSIS RC-1213 K |
|---|---|---|
| C1-A | 12.5<br>366.5 | 12.5<br>366.5 |
| C1-B | 10.0<br>99.3 | 10.4<br>112.5 |
| C10 | 0.01 | 0.015 |
| C11-A | 50μf | 30μf |
| C11-B | 30μf | 50μf |

RESISTANCE VALUES ARE IN OHMS. K= 1000

ALL CAPACITANCE VALUES LESS THAN 1.0 ARE IN μf, VALUES 1.0 & ABOVE ARE IN μμf (μμf), EXCEPT AS NOTED.

VOLTAGES MEASURED TO COMMON NEGATIVE (⏚) WITH "VOLTOHMYST" & SHOULD HOLD WITHIN ± 20% WITH RATED LINE VOLTAGE.

The RGA 12 and RGA 15 are table model radio receivers and the RGD 20 is a table model clock radio designed for the reception of AM broadcasts. These instruments are housed in one piece plastic cabinets with "snap-in" masonite back covers to which is attached the loop antenna and power cord interlock connector. With this mode of power connection, the line cord is disconnected from the chassis thus removing all power when the back cover is removed and the chassis is exposed. The use of captive knobs, which cannot be separated from the cabinet, and line cord disconnect removes the possibility of shock hazard in these instruments.

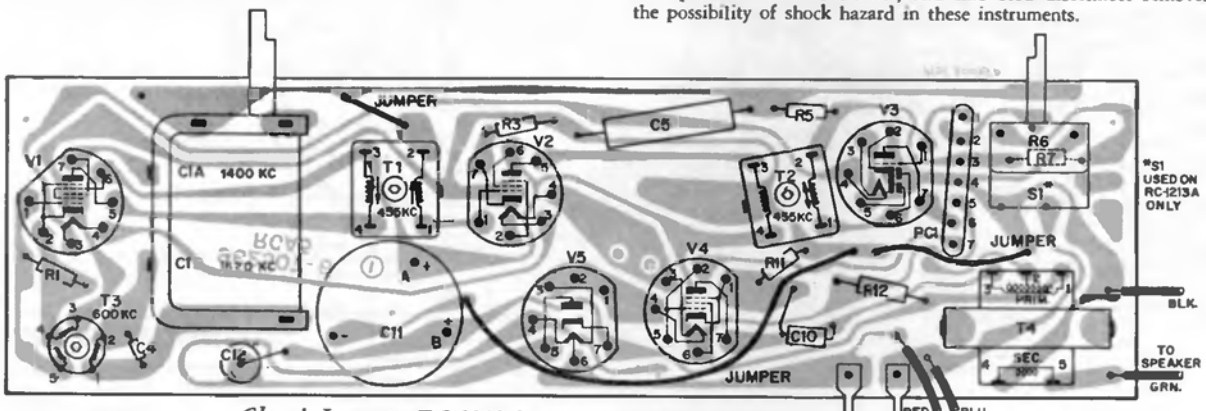


*Chassis Layout—RC-1213A, K* *(Component side)*

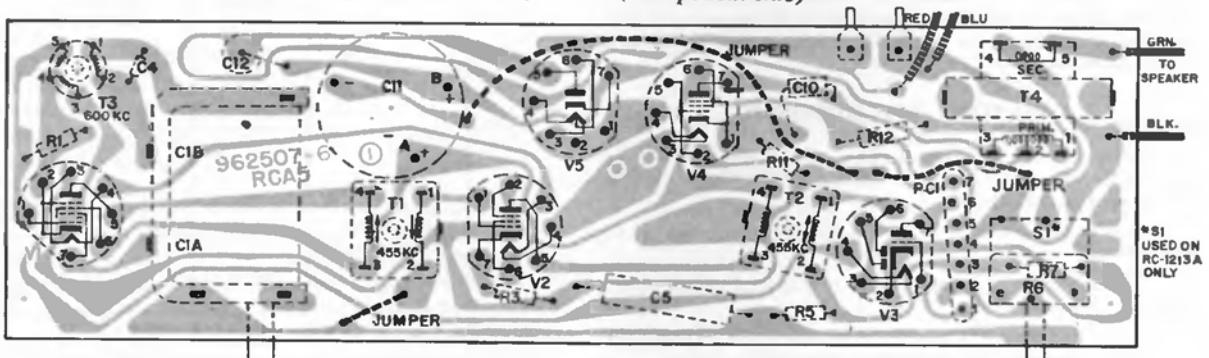


*Chassis Layout—RC-1213A, K* *(Wiring side)*

# RCA VICTOR

## Model VGP 72

### Chassis RS-216A

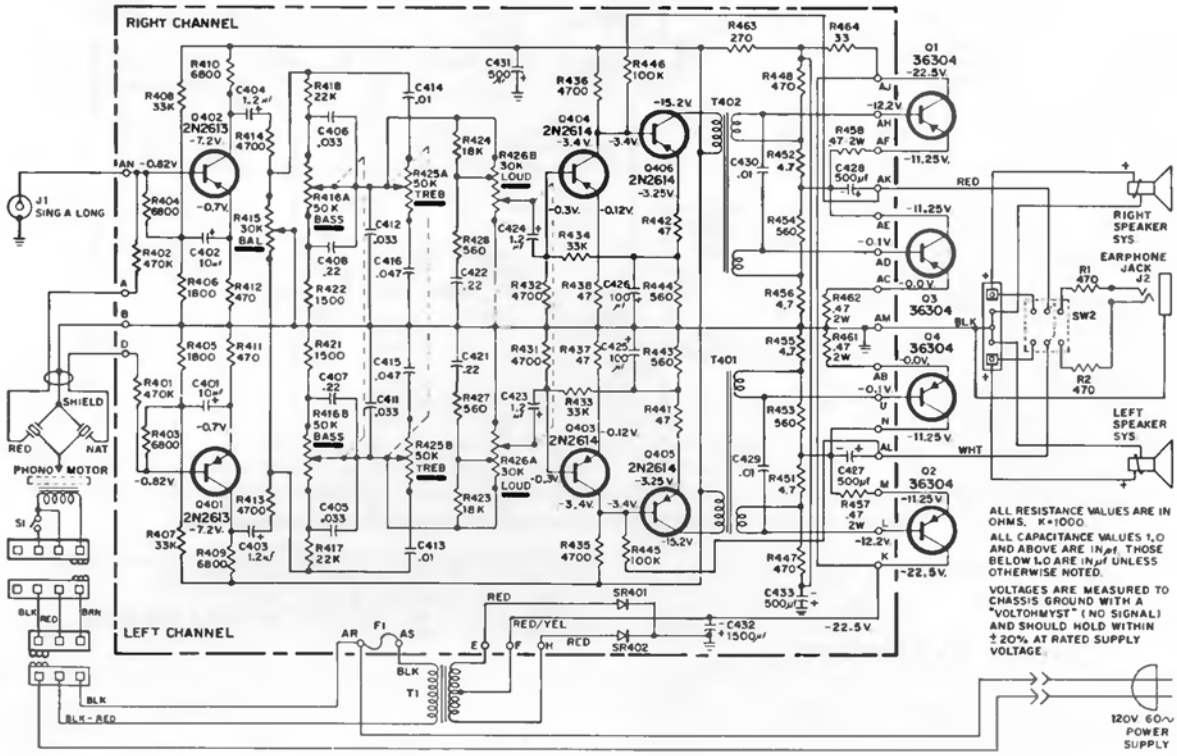


(Models VGE-15M, VGP-83 Chassis RS-219A, -B, are similar to this material)

## CHASSIS REMOVAL

The top of the record changer compartment comprises the complete chassis. It rests on and is secured to a ledge at the front and is held by screws at the rear. The recommended procedure for its removal is as follows:

1. Remove knobs.
2. Pull record changer drawer down.
3. Remove four (4) plated screws holding front of chassis to horizontal ledge located inside of compartment at front of top.
4. Remove wires, running down each back corner of compartment, from holding clips.
5. Remove four (4) painted screws holding rear of chassis to rear of instrument. (Hold chassis—top of compartment—to prevent its falling.)
6. Chassis may then be lowered and removed.
7. Disconnect speaker cables and lift chassis out of case.

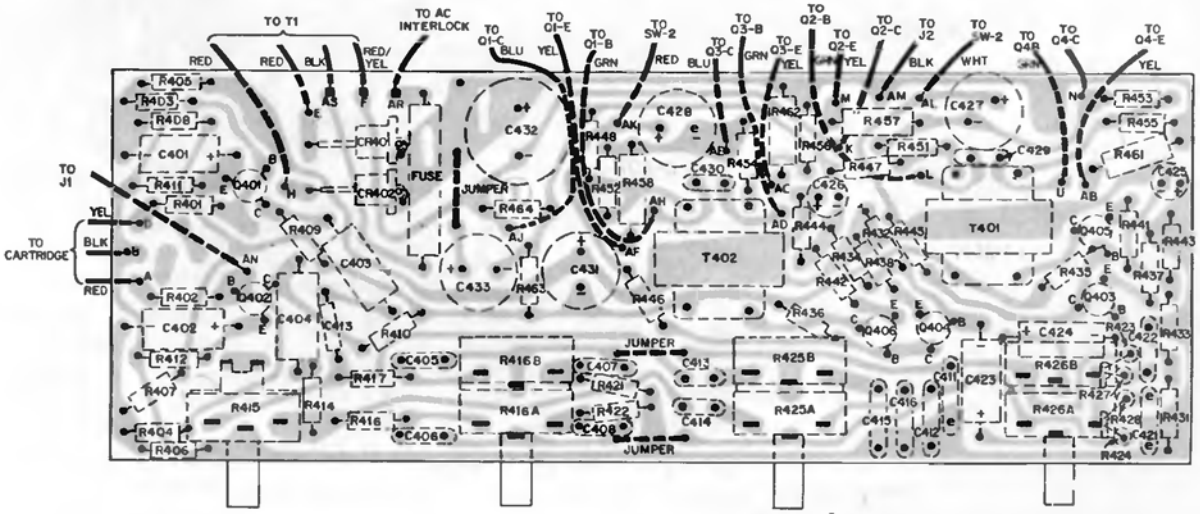


*Printed Wiring Board—View from Wiring Side*

## RCA Victor Models VGE-03W, VGP-25E,T, VGP-34E,G, VGP-43E,T

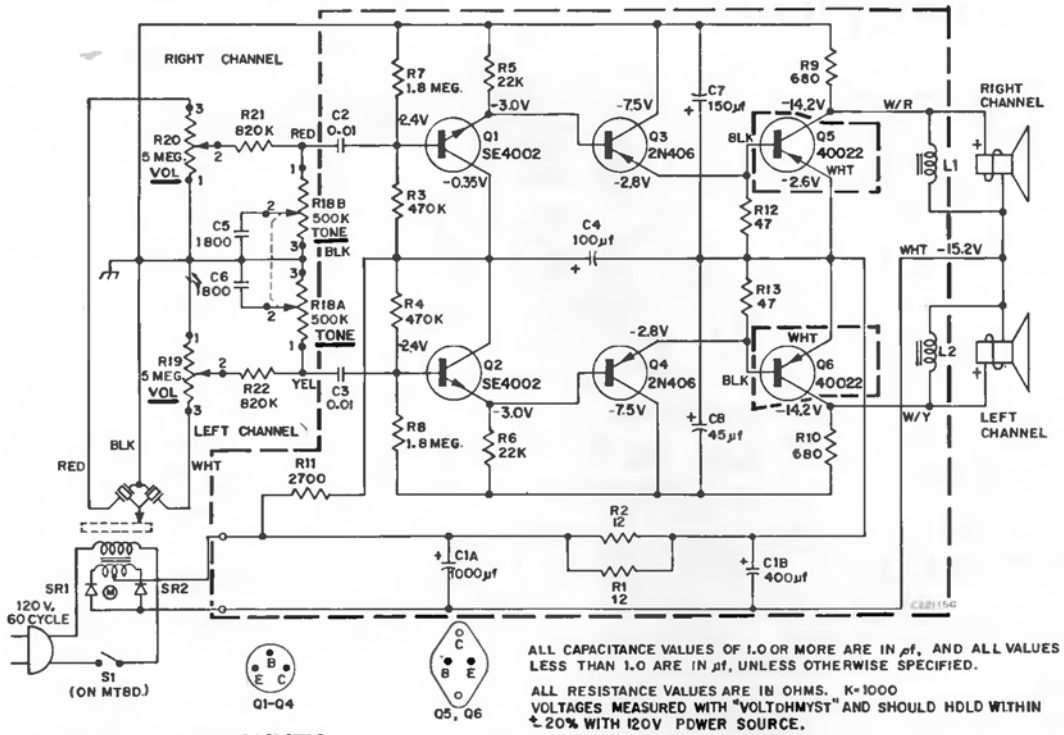


ALL CAPACITANCE VALUES OF 1.0 OR MORE ARE IN µf, AND ALL VALUES LESS THAN 1.0 ARE IN µf, UNLESS OTHERWISE SPECIFIED.

ALL RESISTANCE VALUES ARE IN OHMS. K=1000
VOLTAGES MEASURED WITH "VOLTOHMYST" AND SHOULD HOLD WITHIN ±20% WITH 120V POWER SOURCE.

### CHASSIS ACCESSIBILITY

The "Solid Copper Circuit" transistorized amplifier chassis is physically mounted to the motorboard under the turntable with the large components, such as the transformers and filter capacitors, protruding downward through cutouts in the motorboard. When the turntable is removed, the wiring side of the circuit board is exposed. The output transistors and rectifiers are mounted to the motorboard.

Power connections (B+ and B−) and the output transistors collector connections are made through the four insulated bolts which mount the amplifier chassis to the motorboard. All other connections to the chassis are made by "slip-on" clips.

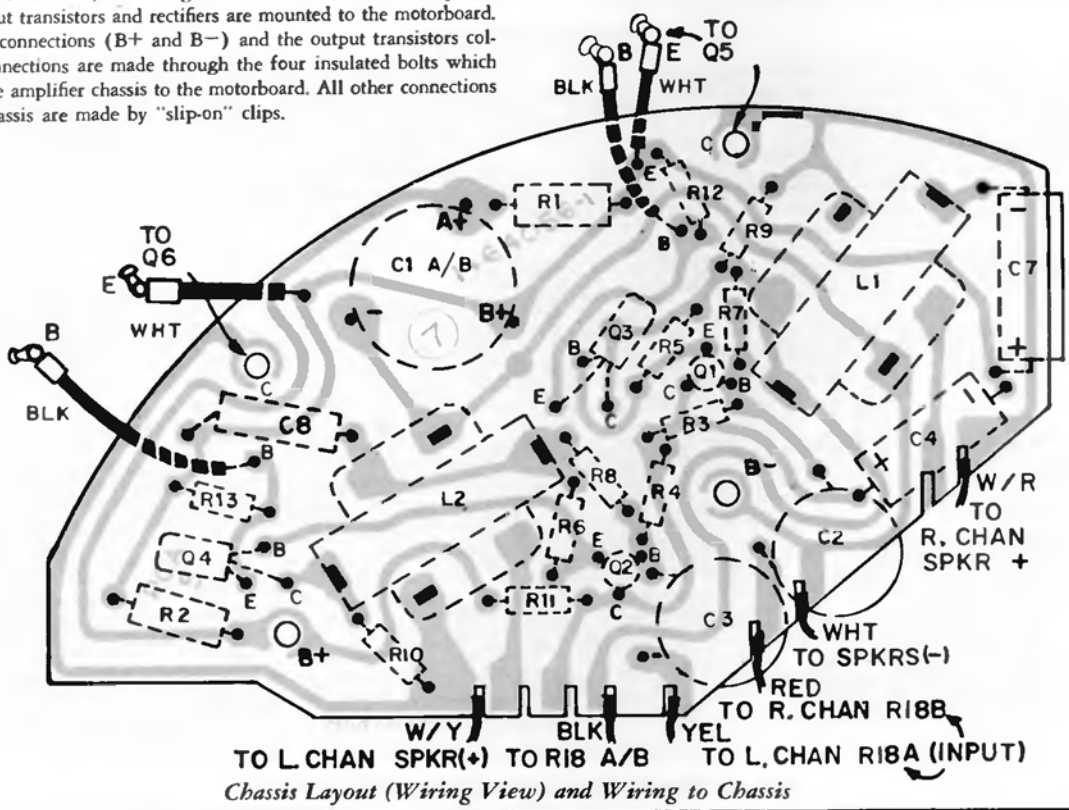


*Chassis Layout (Wiring View) and Wiring to Chassis*

RCA Victor Models VGP-05A, E, N, VGP-08A, G, N, Y, Chassis RS-225, -A

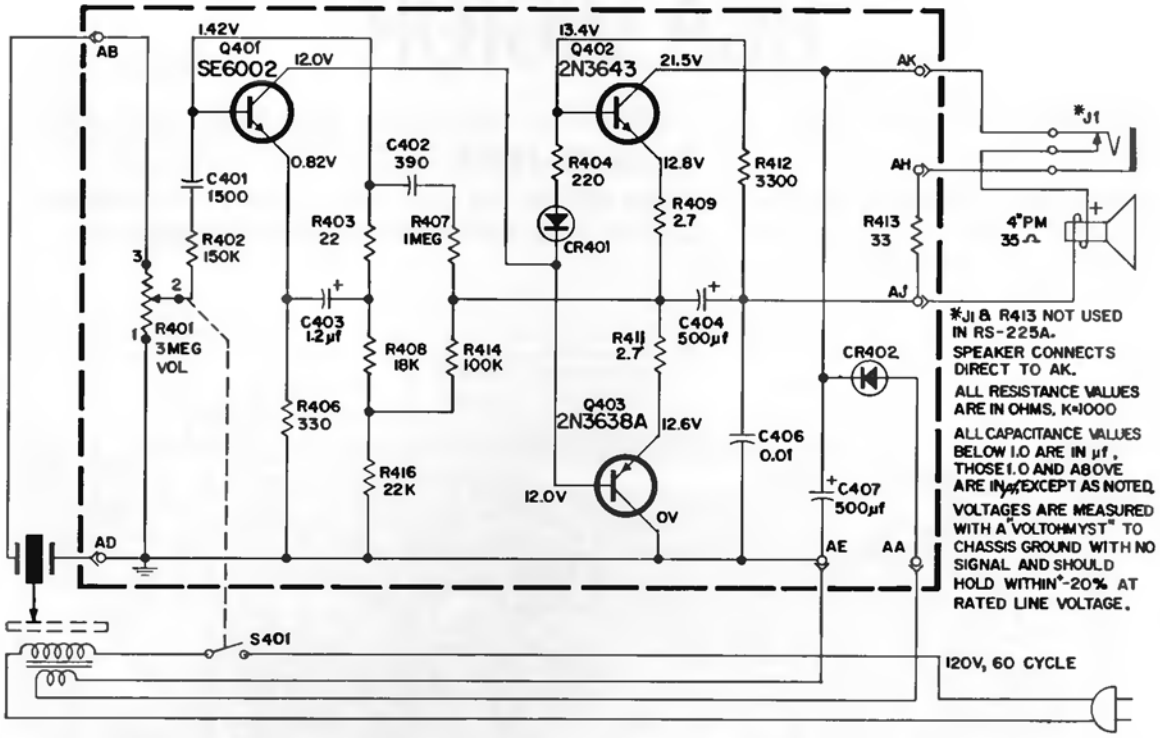


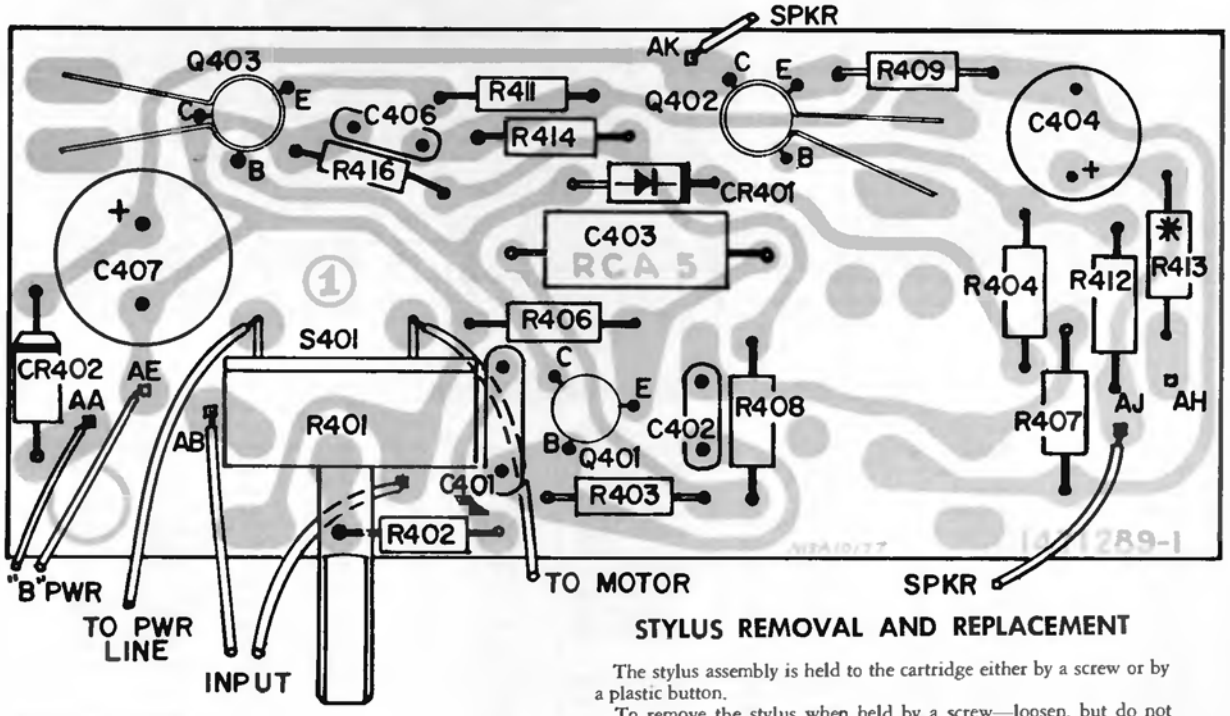


## STYLUS REMOVAL AND REPLACEMENT

The stylus assembly is held to the cartridge either by a screw or by a plastic button.

To remove the stylus when held by a screw—loosen, but do not remove the screw, and slide the stylus assembly out from under it. To replace the stylus—slide the spade end of the stylus assembly under the head of the screw, making certain that it is fully seated, and tighten screw. Check that stylus saddle is seated on the yoke.

To remove the stylus when held by a plastic button—grasp the stylus assembly with a pair of tweezers or needle nose pliers and pull it out from under the plastic button. To replace the stylus—push the spade end of the assembly under the plastic button making certain that it is fully seated. Check that the stylus saddle is seated on the yoke.

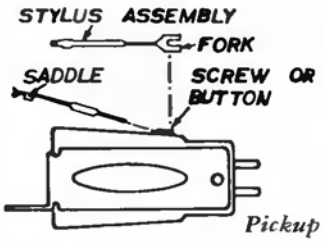


*Pickup and Stylus Assembly*

# RCA VICTOR

Models RHC-29W, RHC-33W, RHC-37L, RHC-41W, RHC-45F, RHC-49S

**Chassis RC-1220A**

Data on these sets presented below and on the next three pages. Alignment is on the next page at right. Circuit diagram and other service material are on the two pages following.

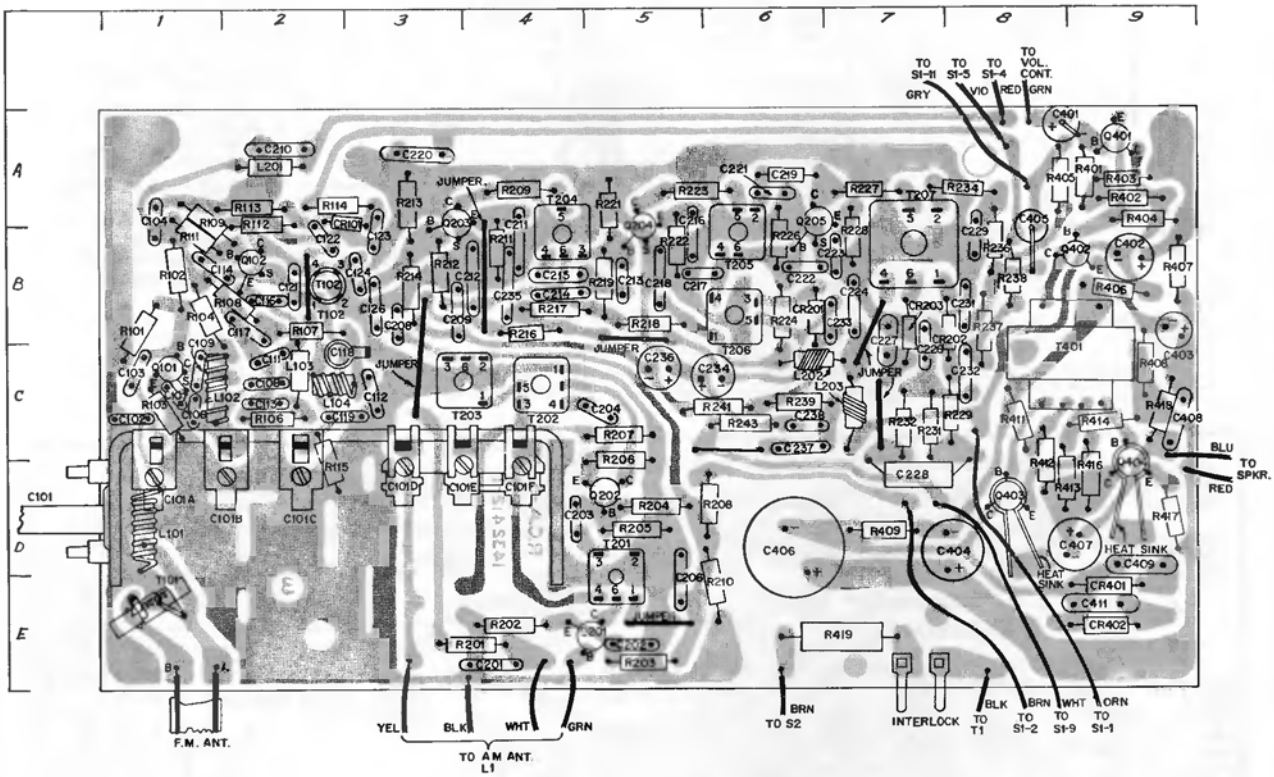


*Chassis Layout—Component View*

| | | | | | | | | | | | |
|---|---|---|---|---|---|---|---|---|---|---|---|
| C101 | D1 | C126 | B3 | C228 | D7 | CR401 | E9 | R102 | B1 | R214 | B3 | R404 | A9 |
| C101A | D1 | | | C229 | B8 | CR402 | E9 | R103 | C1 | R216 | B4 | R405 | A8 |
| C101B | D2 | C201 | E4 | C231 | B8 | | | R104 | B1 | R217 | B4 | R406 | B9 |
| C101C | D2 | C202 | E5 | C232 | CB | L101 | D1 | R106 | C2 | R21B | B5 | R407 | B9 |
| C101D | D3 | C203 | D4 | C233 | B7 | L102 | C1 | R107 | B2 | R219 | B5 | R408 | C9 |
| C101E | D4 | C204 | C5 | C234 | C6 | L103 | C2 | R108 | B2 | R221 | A5 | R409 | D7 |
| C101F | D4 | C206 | E5 | C235 | B4 | L104 | C2 | R109 | A1 | R222 | B5 | R411 | C8 |
| C102 | C1 | C208 | B3 | C236 | C5 | | | R111 | B1 | R223 | A5 | R412 | D8 |
| C103 | C1 | C209 | B3 | C237 | C6 | L201 | A2 | R112 | A2 | R224 | B6 | R413 | D9 |
| C104 | A1 | C210 | A2 | C238 | C6 | L202 | C6 | R113 | A2 | R226 | B6 | R414 | C9 |
| C106 | C1 | C211 | A4 | | | L203 | C7 | R114 | A2 | R227 | A7 | R416 | D9 |
| C107 | C1 | C212 | B4 | C401 | A8 | | | R115 | D2 | R228 | B7 | R417 | D9 |
| C108 | C2 | C213 | B5 | C402 | B9 | Q101 | C1 | | | R229 | CB | R418 | C9 |
| C109 | C1 | C214 | B4 | C403 | B9 | Q102 | B2 | R201 | E4 | R231 | C7 | R419 | E7 |
| C111 | C2 | C215 | B4 | C404 | D8 | | | R202 | E4 | R232 | C7 | | |
| C112 | C3 | C216 | A5 | C405 | AB | Q201 | E5 | R203 | E5 | R234 | A8 | T101 | E1 |
| C113 | C2 | C217 | B5 | C406 | D6 | Q202 | D5 | R204 | D5 | R236 | BB | T102 | B2 |
| C114 | B1 | C218 | B5 | C407 | D9 | Q203 | A3 | R205 | D5 | R237 | BB | | |
| C116 | B2 | C219 | A6 | C408 | C9 | Q204 | A5 | R206 | C5 | R238 | B8 | T201 | D5 |
| C117 | B2 | C220 | A3 | C409 | D9 | Q205 | A6 | R207 | C5 | R239 | C6 | T202 | C4 |
| C118 | C2 | C221 | A6 | C411 | E9 | | | R208 | D6 | R241 | C6 | T203 | C3 |
| C119 | C2 | C222 | B6 | | | Q401 | A9 | R209 | A4 | R243 | C6 | T205 | B6 |
| C121 | B2 | C223 | B7 | CR101 | A3 | Q402 | B9 | R210 | E6 | | | T206 | B6 |
| C122 | B2 | C224 | B7 | | | Q403 | DB | R211 | B4 | R401 | A9 | T207 | A7 |
| C123 | B3 | C226 | C7 | CR201 | B6 | Q404 | D9 | R212 | B3 | R402 | A9 | | |
| C124 | B3 | C227 | B7 | CR202 | BB | | | R213 | A3 | R403 | A9 | T401 | C8 |
| | | | | CR203 | B7 | R101 | B1 | | | | | | |

RCA Victor Chassis RC-1220A, Continued

## AM-FM ALIGNMENT PROCEDURE

### INSTRUMENTS REQUIRED

**Signal Sources**

1. RF Signal Generator (RCA WR-50A or equivalent)
2. TV/FM Sweep Generator (RCA WR-69A or equivalent)
3. Marker Generator (RCA WR-99A or equivalent)

**Output Indicators**

4. Vacuum-Tube Voltmeter (RCA WV-98B or equivalent)
5. Oscilloscope (RCA WO-91A or equivalent)

**Tools**

6. Hex head alignment tool
7. Thin fibre shaft alignment tool

### GENERAL ALIGNMENT CONDITIONS

1. Connect low side of signal source and output indicator to chassis ground as close as possible to high side connection unless otherwise specified.
2. Signal input must be kept as low as possible to avoid AVC action. (Set output indicator to highest sensitivity.)
3. Markers must be accurate. (Crystal controlled or checked against a crystal calibrator.) The 10.7 mc marker used in each section of the FM alignment must be the same. (Generator dial should not be moved.)
4. Marker insertion and amplitude must not distort the oscilloscope trace.
5. Standard modulation is 400 cycle at 30% amplitude.

| STEP | Signal Source— Connected to— | Set Signal to— | Set Radio Dial to— | Output Indicator— Connected to— | Adjust | Adjust for— | STEP |
|---|---|---|---|---|---|---|---|
| 1 | Set Radio Function Switch on "AM" | | | | | | 1 |
| 2 | RF Generator— Q202 Base through a 0.01μf capacitor | 455 kc (modulated) | Quiet point on band near 1600 kc | V.T.V.M.— Across speaker voice coil | T206 (3rd AM IF) | Maximum | 2 |
| 3 | | | | | T204 Tap (2nd AM IF) | | 3 |
| 4 | | | | | T203 Top & Bottom (1st AM IF) | | 4 |
| 5 | RF Generator— A standard radiating loop or short piece of wire placed near AM antenna | 1620 kc (modulated) | gang fully open | | C101F-T (Oscillator Trim) | | 5 |
| 6 | | 1400 kc (modulated) | 1400 kc | | C101D-T (Antenna Trim) | | 6 |
| 7 | | | | | C101E-T (RF Trimmer) | | 7 |
| 8 | | 600 kc (modulated) | 600 kc (rack gang) | | T201 (RF Trans.) | | 8 |
| 9 | | | | | T202 (Oscillator Coil) | | 9 |
| 10 | Repeat steps 2 through 4 and steps 5 through 9 as necessary to obtain maximum sensitivity on stations | | | | | | 10 |
| 11 | Set Radio Function Switch on "FM" | | | | | | 11 |
| 12 | RF Generator— Q205 Base through a 0.01μf capacitor | 10.7 mc (unmodulated) | Quiet point on band | V.T.V.M.— Across R232 | T207 Bottom core (Pri.) (Ratio Detector) | Maximum | 12 |
| 13 | | | | V.T.V.M.— (Set to center zero) Junction of C231, R236, R237 | T207 Top core (Sec.) (Ratio Detector) | Zero Voltage (cross-over) | 13 |
| 14 | Repeat steps 12 and 13 as necessary to obtain a balanced "S" curve with ±200 kc linearity | | | | | | 14 |
| 15 | TV/FM Sweep Gen.— Q204 Base through a 0.01μf capacitor | 240 kc Sweep centered at 10.7 mc with markers at 10.6, 10.7 & 10.8 mc | Quiet point on band | Oscilloscope— with signal Tracing Probe (RCA WG-302A) | *Detune T204 Bottom | Maximum symmetrical response centered at 10.7 mc with 10.6 and 10.8 mc at equal heights within 10% and approx. 40% down slope (limits-between 30%-60%) | 15 |
| 16 | | | | | T205 Top & Bottom (3rd FM IF) | | 16 |
| 17 | TV/FM Sweep Gen.— Q203 Base through a 0.01μf capacitor | | | Q205 Base (adjust signal input to obtain a 30 mv P-P reading on oscilloscope) | *Detune T102 Top | | 17 |
| 18 | | | | | T204 Bottom (2nd FM IF) | | 18 |
| 19 | TV/FM Sweep Gen.— One FM antenna terminal | | | | T102 Top & Bottom (1st FM IF-in tuner) | | 19 |
| 20 | Repeat steps 15 thru 19 as necessary to obtain specified response | | | | | | 20 |
| 21 | Marker Generator— across FM antenna terminals through a matching network if necessary | 108.5 mc | gang fully open | V.T.V.M.— Across speaker voice coil | C118 (Oscillator Trimmer) | Maximum | 21 |
| 22 | | | | | C101B-T (RF-Trimmer) | | 22 |
| 23 | | | | | C101A-T (Antenna Trimmer) | | 23 |
| 24 | Repeat steps 21, 22 and 23 as necessary to obtain maximum sensitivity on stations | | | | | | 24 |

* When detuning T204 & T102, the specified core should be adjusted until no action appears in the trace with further adjustment of the core (2 or more turns). Opposite core will have little or no effect after specified core is fully detuned.

RCA Victor
Chassis RC-1220A
(Continued)

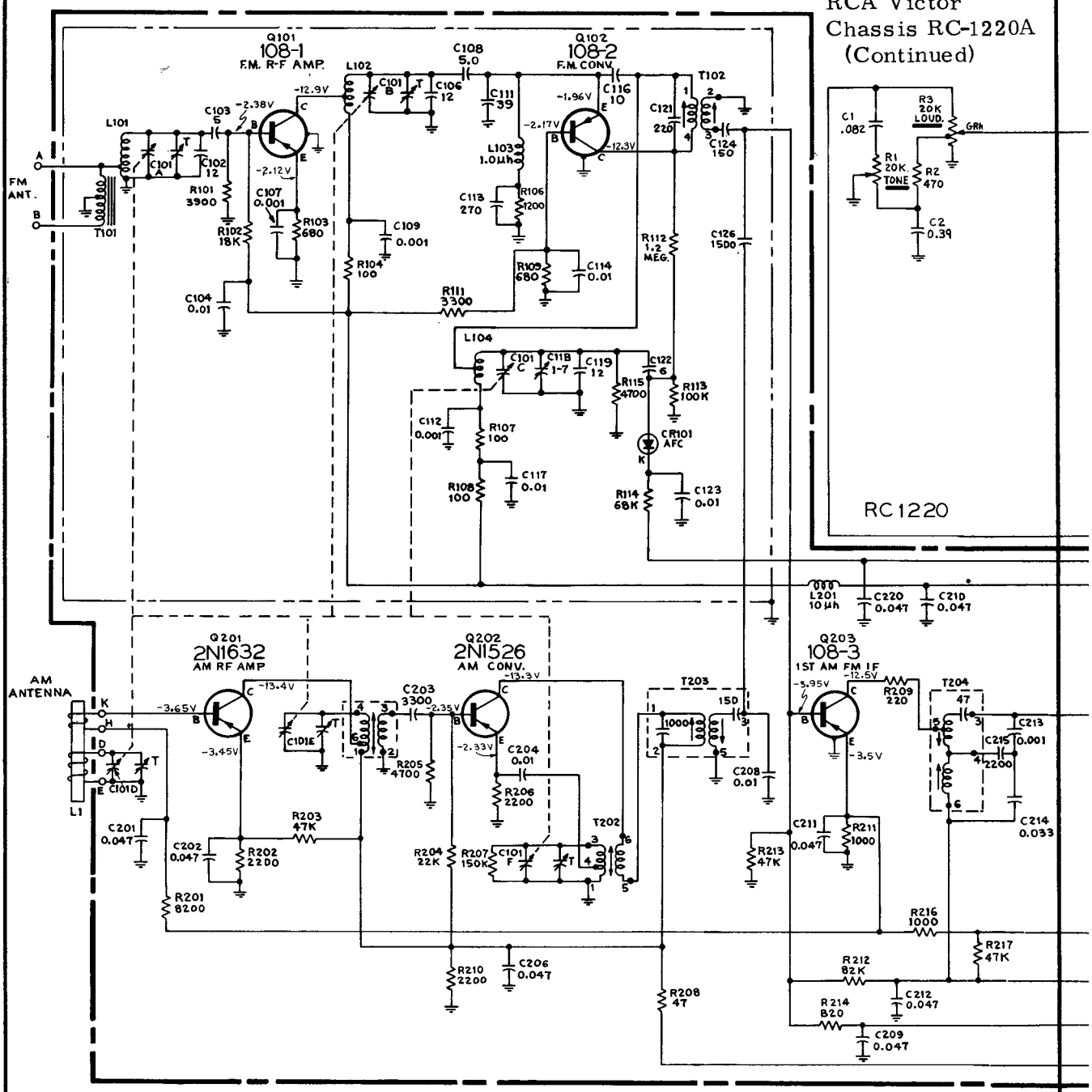


| SYMBOL NO. | STOCK NO. | DESCRIPTION |
|---|---|---|
| | | CAPACITORS: |
| C118 | 115092 | trimmer—1-8 pf—for C101C |
| C119 | 115658 | ceramic—12 pf, ±5%, 500 v |
| C121 | 115660 | mica—220 pf, ±5%, 100 v |
| C122 | 115656 | ceramic—6 pf, ±10%, 500 v |
| C123 | 115091 | ceramic—0.01 μf, ±20%, 100 v |
| C124 | 115661 | mica—150 pf, ±5%, 100 v |
| C126 | | ceramic—1500 pf, ±10%, 500 v |
| C201 | | ceramic—0.047 μf, +100—20%, 100 v |
| C202 | | ceramic—0.047 μf, +100—20%, 100 v |
| C203 | | ceramic—3300 pf, ±20%, 100 v |
| C204 | | ceramic—0.01 μf, ±20%, 100 v |
| C206 | | ceramic—0.047 μf, +100—20%, 100 v |
| C208 | | ceramic—0.01 μf, ±20%, 100 v |
| C209 | | ceramic—0.047 μf, +100—20%, 100 v |
| C210 | | ceramic—0.047 μf, +100—20%, 100 v |
| C211 | | ceramic—0.047 μf, +100—20%, 100 v |
| C212 | | ceramic—0.047 μf, +100—20%, 100 v |
| C213 | | ceramic—1000 pf, ±10%, 500 v |
| C214 | | ceramic—0.033 μf, ±20%, 100 v |
| C215 | | ceramic—2200 pf, ±10%, 500 v |
| C216 | | ceramic—0.047 μf, +100—20%, 100 v |
| C217 | 105310 | ceramic—390 pf, ±10%, 500 v |
| C218 | 112969 | ceramic—0.1 μf, ±20%, 50 v |
| C219 | 115666 | headed lead—1 pf, ±5%, 500 v |
| C220 | | ceramic—0.047 μf, +100—20%, 100 v |
| C221 | | ceramic—680 pf, ±10%, 500 v |
| C222 | | ceramic—680 pf, ±10%, 500 v |
| C223 | | ceramic—0.01 μf, +100—20%, 100 v |
| C224 | | ceramic—0.047 μf, +100—20%, 100 v |
| C226 | | ceramic—330 pf, ±10%, 500 v |
| C227 | | ceramic—330 pf, ±10%, 500 v |
| C228 | 111370 | electrolytic—2 μf, +250—10%, 50 v |
| C229 | | ceramic—330 pf, ±10%, 500 v |
| C231 | | ceramic—0.022 μf, ±20%, 100 v |
| C232 | | ceramic—0.047 μf, +100—20%, 100 v |
| C233 | | ceramic—2200 pf, ±20%, 100 v |
| C234 | 115100 | electrolytic—10 μf, +100—10%, 10 v |
| C235 | | ceramic—0.047 μf, +100—20%, 100 v |
| C236 | 115100 | electrolytic—10 μf, +100—10%, 10 v |
| C237 | | mylar—0.1 μf, ±20%, 100 v |
| C238 | | ceramic—3300 pf, ±20%, 100 v |
| C401 | 115180 | electrolytic—1.2 μf, ±20%, 15 v |
| C402 | 115803 | electrolytic—100 μf, +100—10%, 15 v |
| C403 | 115617 | electrolytic—100 μf, +250—10%, 6 v |

## RCA Victor Chassis RC-1220A Schematic Diagram, Continued

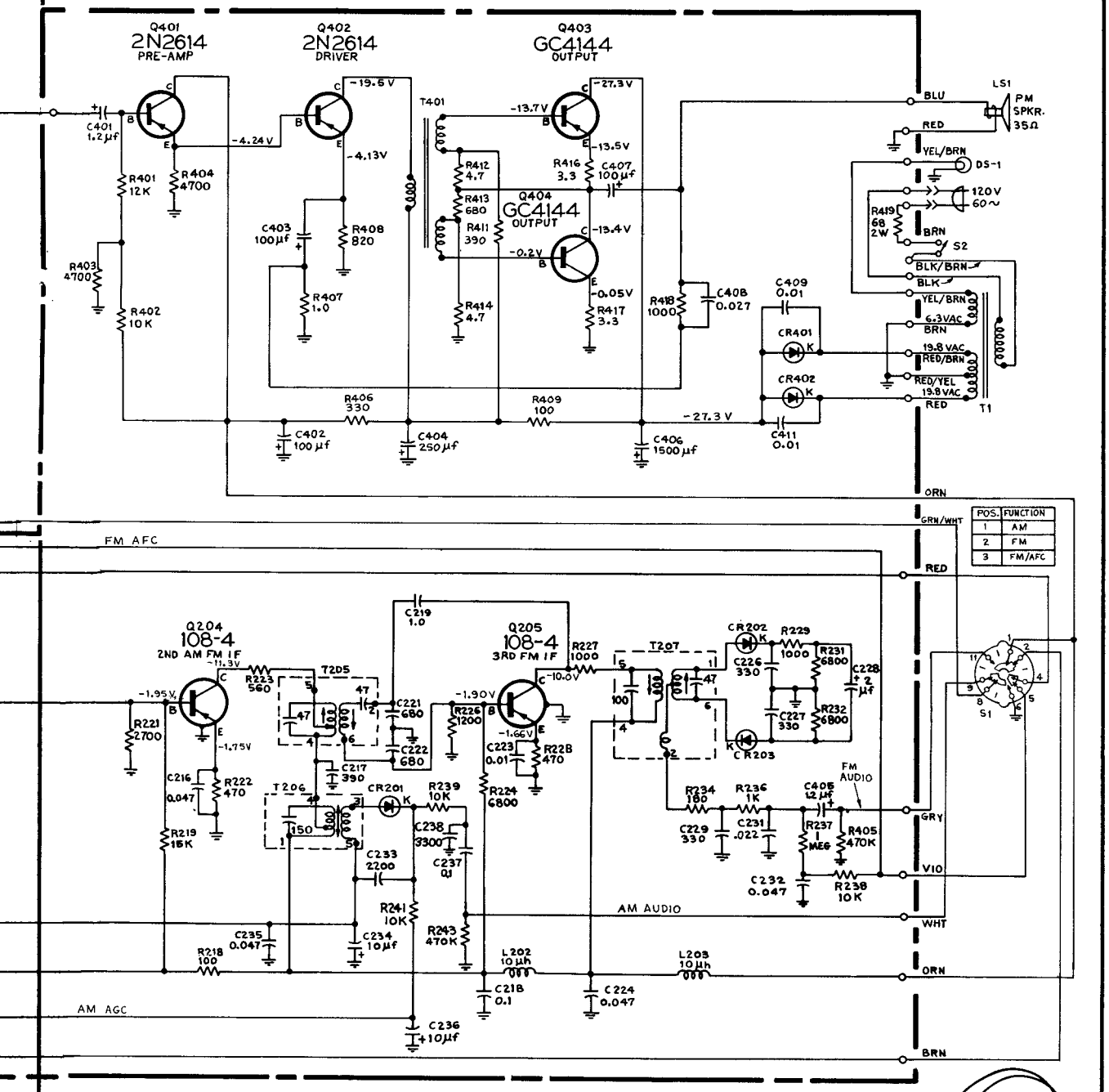


NOTES:

UNLESS OTHERWISE SPECIFIED

1. ALL CAPACITOR VALUES LESS THAN 1.0 ARE µf VALUES 1.0 & ABOVE ARE Pf.
2. ALL RESISTORS 1/2 W & VALUES ARE IN OHMS. K=1000
3. ALL CONNECTORS SHOWN FROM WIRED SIDE.
4. CONNECTOR PIN NUMBERS FOR REF. ONLY.
5. ALL SECTIONS OF SWITCH S1 ARE VIEWED FROM FRONT, WITH SWITCH IN EXTREME C.C.W. POSITION.
6. VOLTAGES MEASURED WITH "VOLTOHMYST" & SHOULD HOLD WITHIN ± 20% AT RATED LINE VOLTAGE. MEASURED TO CHASSIS GROUND "B+" NO SIGNAL APPLIED.

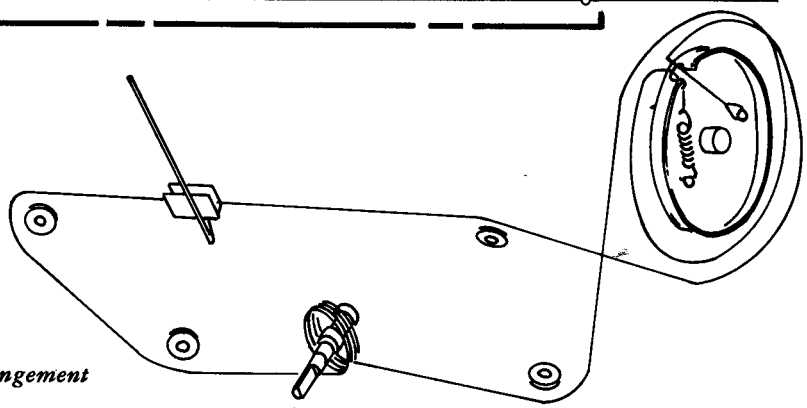

*Dial Cord Arrangement*

## RCA Victor Model RHA-39W, Chassis RC-1224C; Model RHD-29W, Chassis RC-1224D

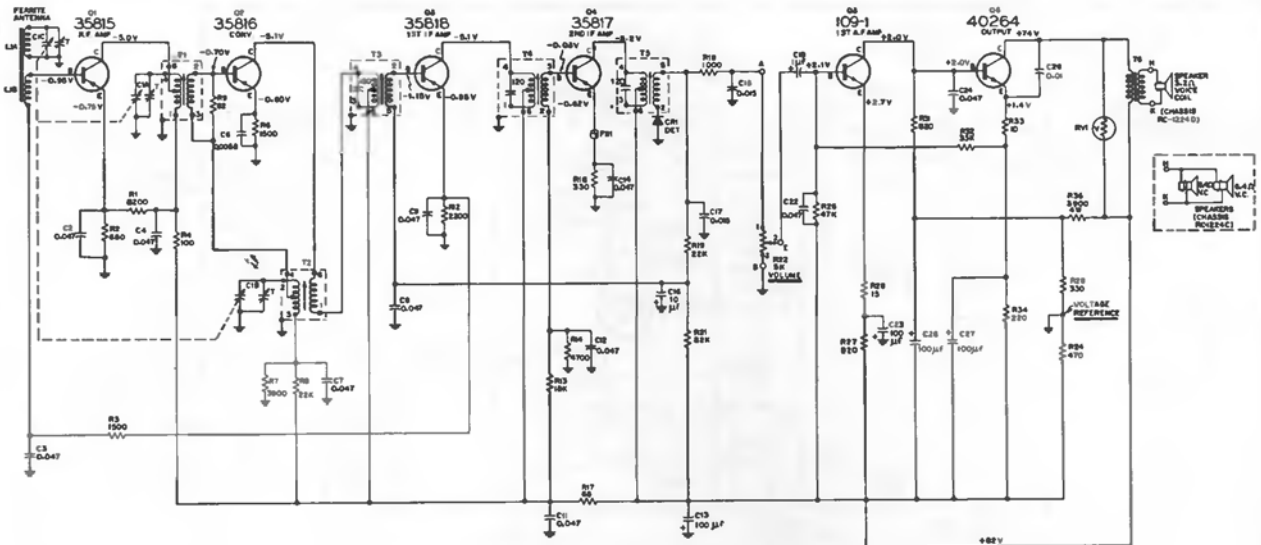


IF 455 KC.

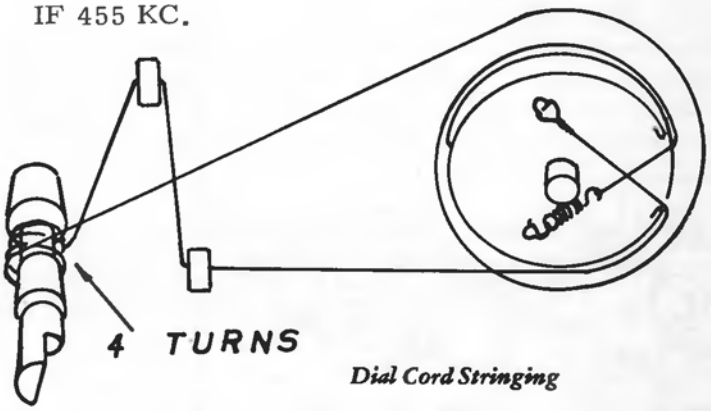


*Dial Cord Stringing*

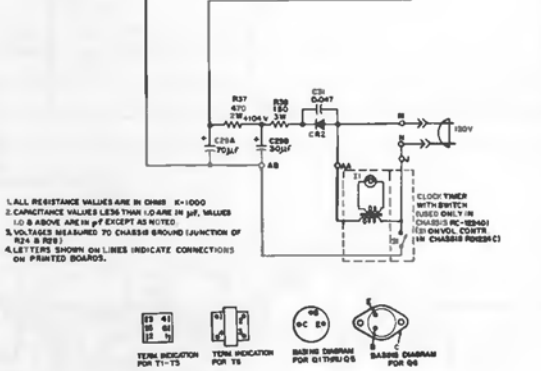


| | | | | | |
|---|---|---|---|---|---|
| C1.....1C | C16.....5C | CR1.....5C | R1.....1A | R17.....4B | R33.....7B |
| C2.....1A | C17.....5C | CR2.....8A | R2.....1A | R18.....5B | R34.....5B |
| C3.....1A | C18.....5C | | R3.....4C | R19.....4C | R36.....5A |
| C4.....2A | C19.....6B | FB1.....4C | R4.....2A | R21.....4C | R37.....8B |
| C6.....3A | C22.....6B | | R6.....3A | R22.....6C | R38.....BC |
| C7.....2B | C23.....6A | Q1.....1A | R7.....2B | R24.....5B | RV1.....6A |
| C8.....2C | C24.....6B | Q2.....3A | R8.....3A | R26.....6B | |
| C9.....2C | C26.....7C | Q3.....3C | R9.....3A | R27.....5A | T1.....2A |
| C11.....3B | C27.....4B | Q4.....4C | R12.....2C | R28.....5A | T2.....3B |
| C12.....4B | C28.....4A | Q5.....6B | R13.....4B | R29.....5B | T3.....3B |
| C13.....4B | C29.....8B | Q6.....7B | R14.....4A | R31.....5B | T4.....4B |
| C14.....4C | C31.....8A | | R16.....4C | R32.....5B | T5.....5B |
| | | | | | T6.....7A |

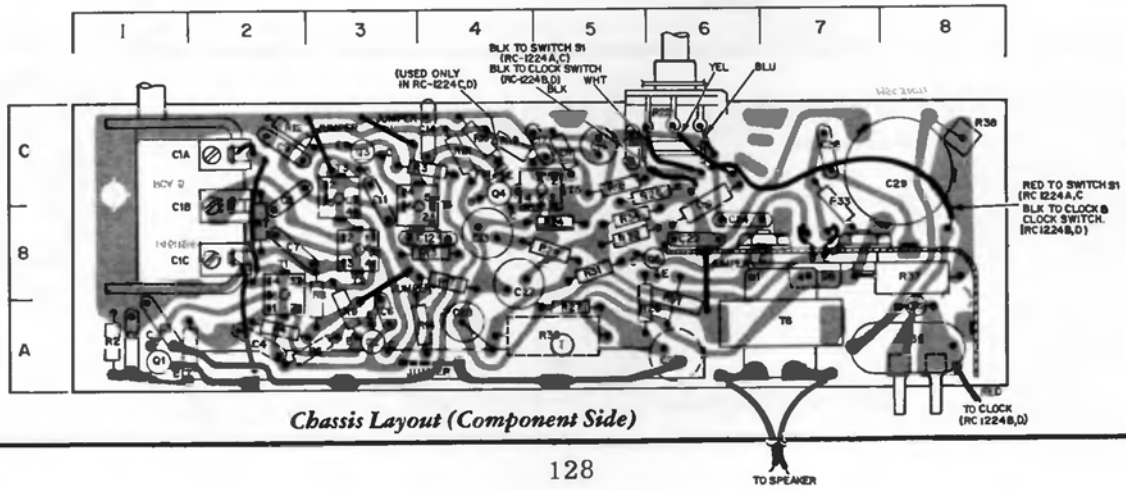


*Chassis Layout (Component Side)*

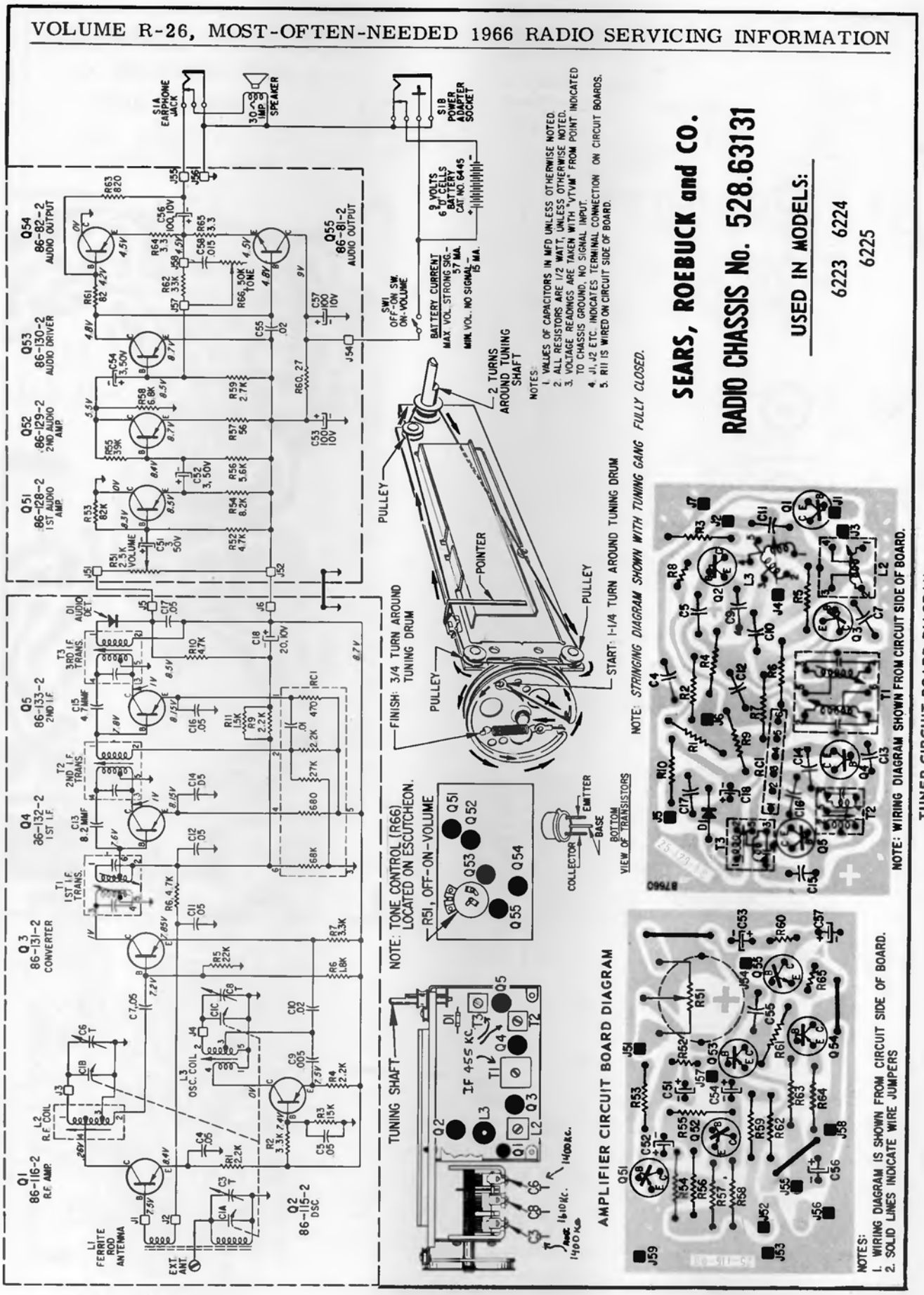
SEARS, ROEBUCK and CO.
RADIO CHASSIS No. 528.63131
USED IN MODELS:
6223 6224
6225
NOTES:
1. VALUES OF CAPACITORS IN MFD UNLESS OTHERWISE NOTED.
2. ALL RESISTORS ARE 1/2 WATT, UNLESS OTHERWISE NOTED.
3. VOLTAGE READINGS ARE TAKEN WITH "VTVM" FROM POINT INDICATED TO CHASSIS GROUND, NO SIGNAL INPUT.
4. J1, J2 ETC. INDICATES TERMINAL CONNECTION ON CIRCUIT BOARDS.
5. R11 IS WIRED ON CIRCUIT SIDE OF BOARD.
NOTE: STRINGING DIAGRAM SHOWN WITH TUNING GANG FULLY CLOSED.
NOTE: WIRING DIAGRAM SHOWN FROM CIRCUIT SIDE OF BOARD.
TUNER CIRCUIT BOARD DIAGRAM
AMPLIFIER CIRCUIT BOARD DIAGRAM
NOTES:
1. WIRING DIAGRAM IS SHOWN FROM CIRCUIT SIDE OF BOARD.
2. SOLID LINES INDICATE WIRE JUMPERS
NOTE: TONE CONTROL (R66) LOCATED ON ESCUTCHEON.
R51, OFF-ON-VOLUME
FINISH: 3/4 TURN AROUND TUNING DRUM
START: 1-1/4 TURN AROUND TUNING DRUM
2 TURNS AROUND TUNING SHAFT
PULLEY
POINTER
TUNING SHAFT
BOTTOM VIEW OF TRANSISTORS
COLLECTOR
EMITTER
BASE
SW1 OFF-ON SW. ON-VOLUME
BATTERY CURRENT
MAX. VOL. STRONG SIG. - 57 MA.
MIN. VOL. NO SIGNAL - 15 MA.
9 VOLTS 6 D CELLS BATTERY CAT. NO. 6445
S1A EARPHONE JACK
S1B POWER AMPLIFIER SOCKET
SPEAKER
Q1 86-116-2 R.F. AMP.
Q2 86-115-2 OSC
Q3 86-131-2 CONVERTER
Q4 86-132-2 1ST I.F.
Q5 86-133-2 2ND I.F.
Q51 86-128-2 1ST AUDIO AMP.
Q52 86-129-2 2ND AUDIO AMP.
Q53 86-130-2 AUDIO DRIVER
Q54 86-82-2 AUDIO OUTPUT
Q55 86-81-2 AUDIO OUTPUT
T1 1ST I.F. TRANS.
T2 2ND I.F. TRANS.
T3 3RD I.F. TRANS.
L1 FERRITE ROD ANTENNA
L2 R.F. COIL
L3 OSC. COIL
D1 AUDIO DET.
EXT. ANT.
IF 455 KC.
1400 KC.
1610 KC.

**SEARS, ROEBUCK AND CO.**

**CHASSIS 132.91301**

Used in Models 6208, 6209, 6210, 6211

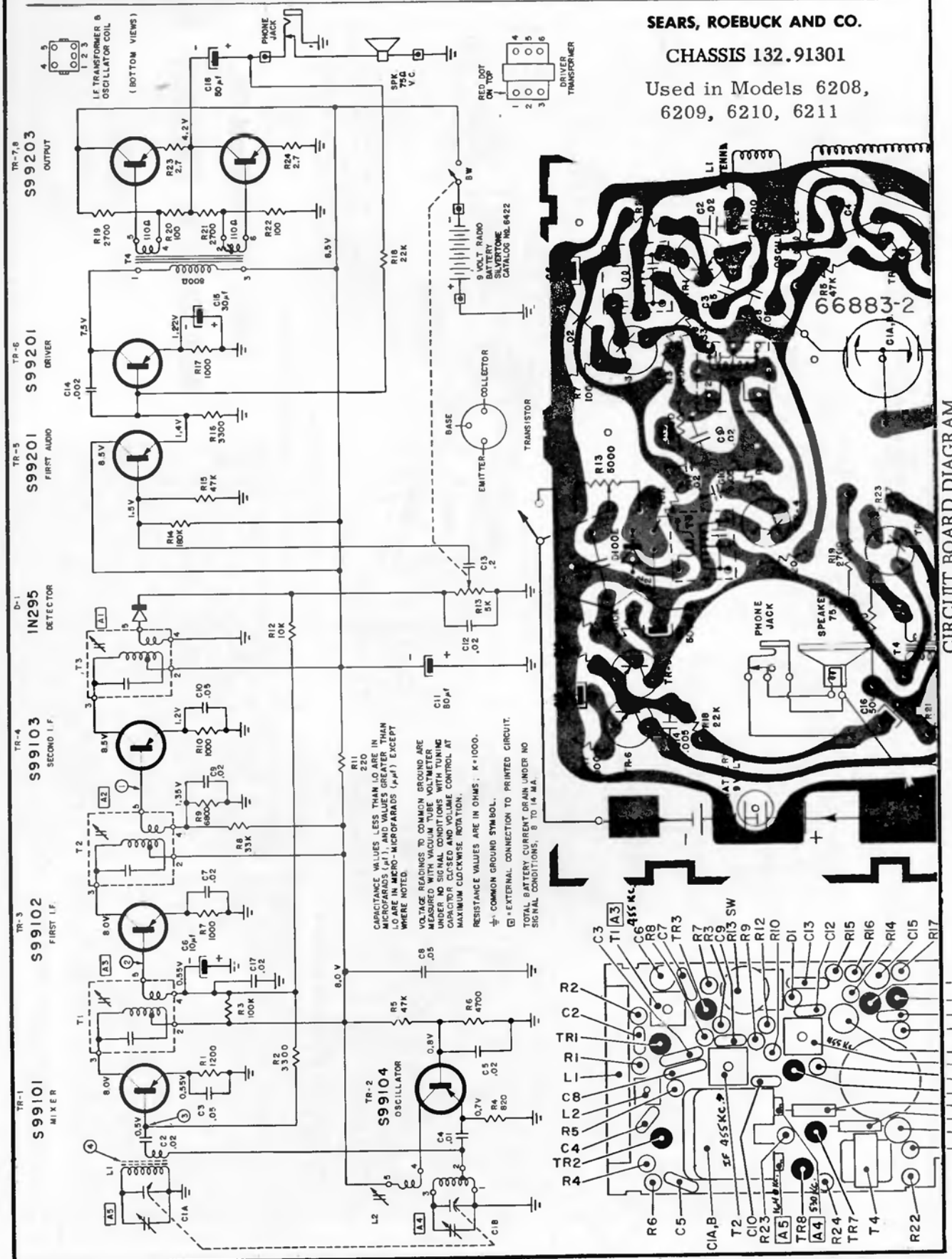


CIRCUIT BOARD DIAGRAM (Bottom View)




LOCATION OF PARTS

## SEARS, ROEBUCK Chassis No. 132.90301, Models 6202, 6203, 6204

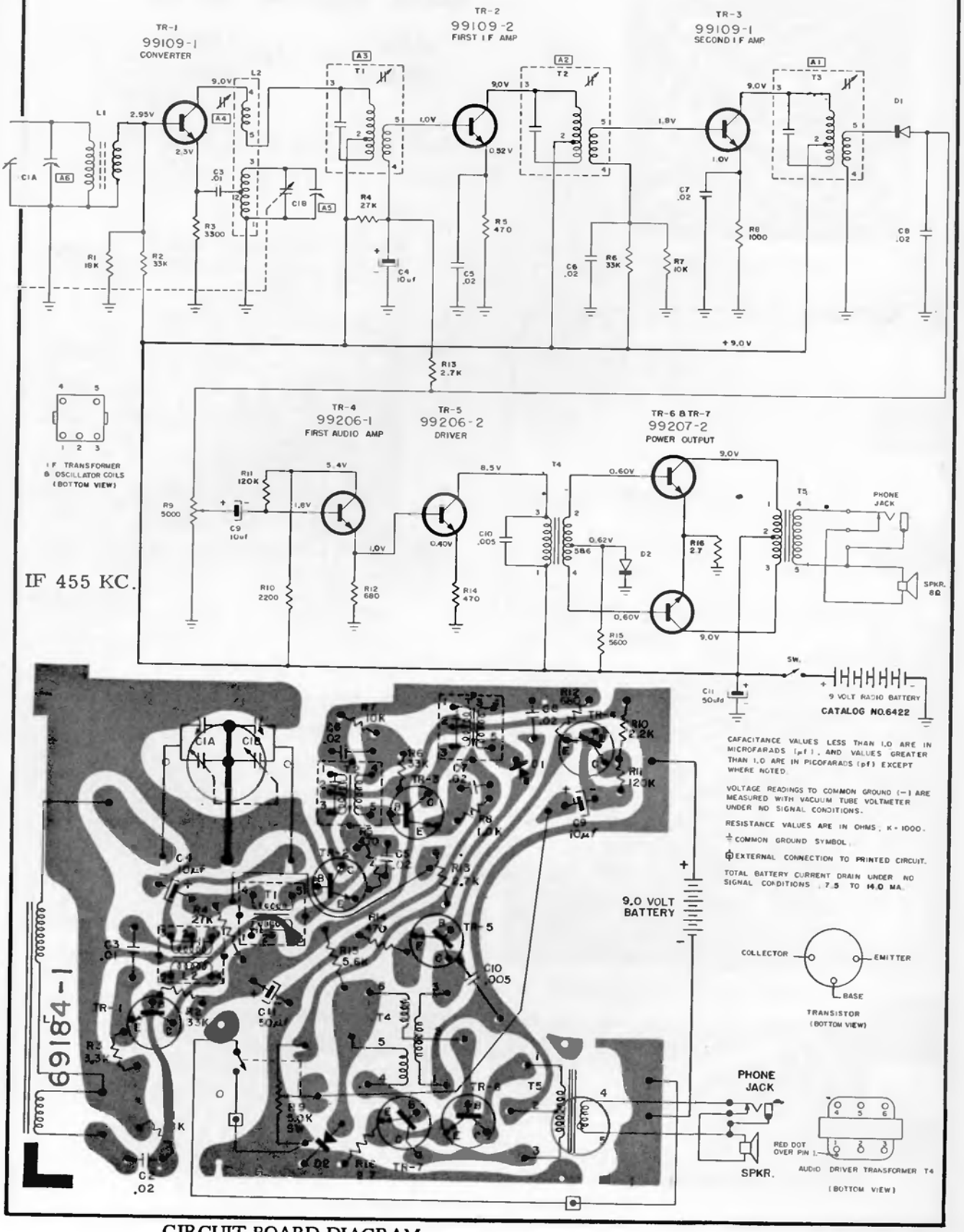


CIRCUIT BOARD DIAGRAM
(Bottom View)

# SEARS, ROEBUCK and CO.

**RADIO CHASSIS NOS. 528. { 63470 / 63471**

Used in Models 6055, 6056

(See page at right for schematic diagram)

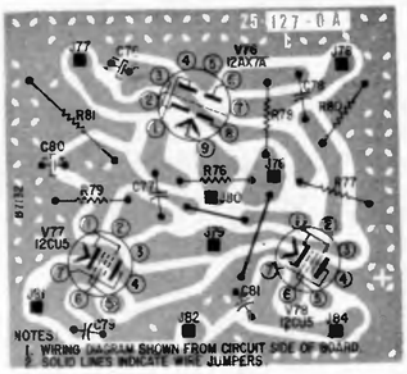


AUDIO CIRCUIT BOARD

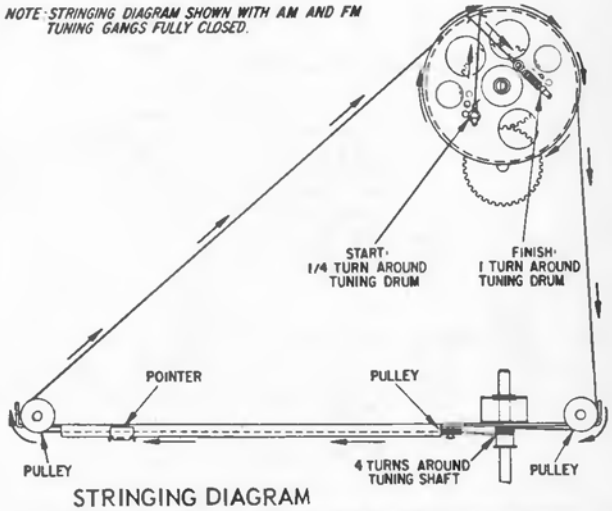


STRINGING DIAGRAM

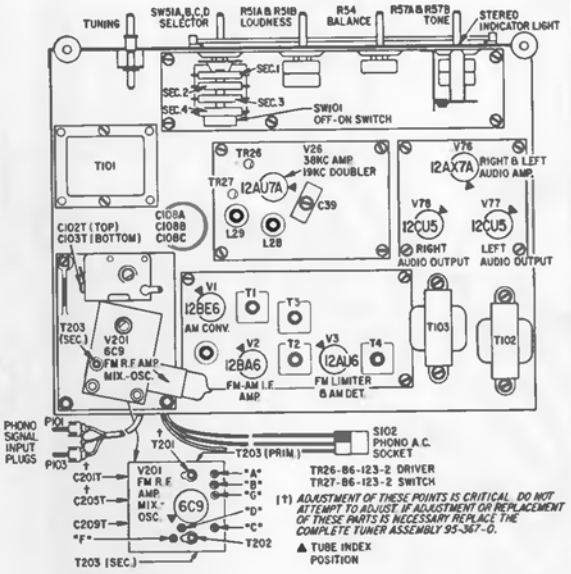


CHASSIS VIEW

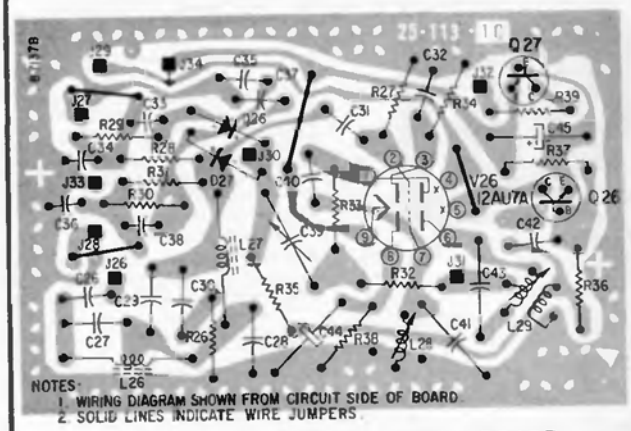


MULTIPLEX CIRCUIT BOARD

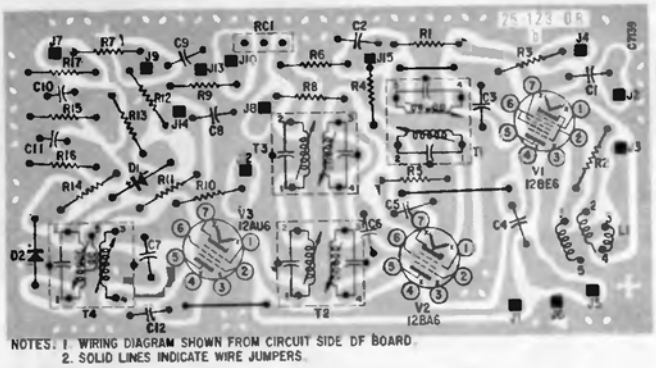


I.F. CIRCUIT BOARD

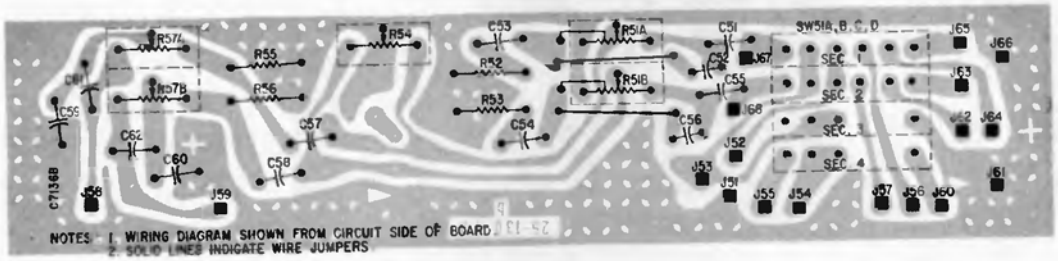


TONE CONTROL CIRCUIT BOARD

SCHEMATIC DIAGRAM FOR CHASSIS 63470, 63471

SEARS, ROEBUCK & CO.
Chassis 528.63470, 528.63471
(Continued)

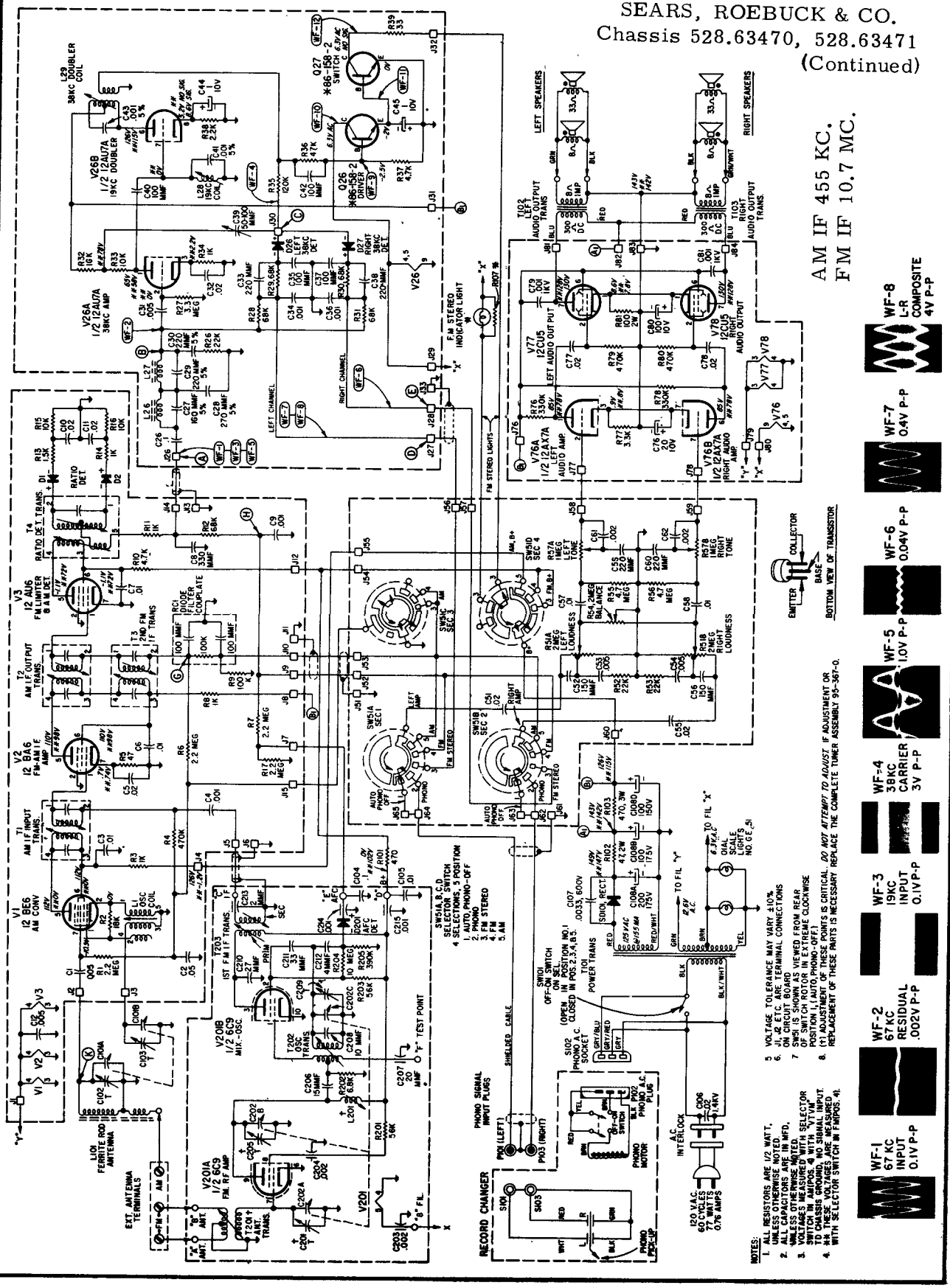

SEARS, ROEBUCK & CO. Chassis 528.63140, Model 6200

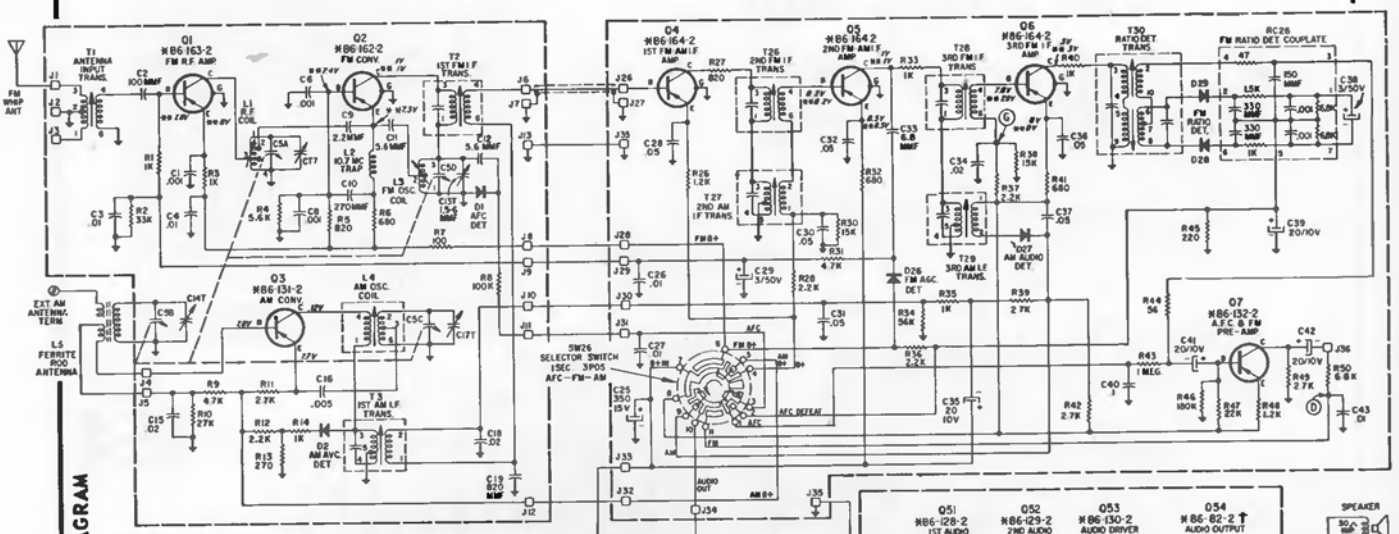

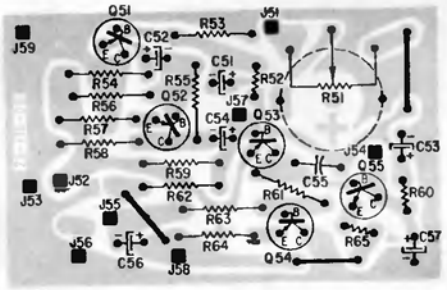

AMPLIFIER CIRCUIT BOARD DIAGRAM

NOTES:
1. WIRING DIAGRAM IS SHOWN FROM CIRCUIT SIDE OF BOARD.
2. SOLID LINES INDICATE WIRE JUMPERS

NOTES:
1. ALL RESISTORS ARE 1/2 WATT, UNLESS OTHERWISE NOTED
2. ALL CAPACITORS ARE MFD, UNLESS OTHERWISE NOTED.
3. J1, J2 ETC, INDICATE TERMINAL CONNECTIONS ON CIRCUIT BOARD.
4. (SW26) SELECTOR SWITCH IS SHOWN IN AM POSITION.
5. VOLTAGE READINGS ARE TAKEN WITH "VTVM", NO SIGNAL INPUT, SELECTOR SWITCH (SW26) IN AM POSITION.
** THESE VOLTAGES ARE MEASURED WITH SELECTOR SWITCH (SW26) IN FM POSITION.

TUNER CIRCUIT BOARD DIAGRAM

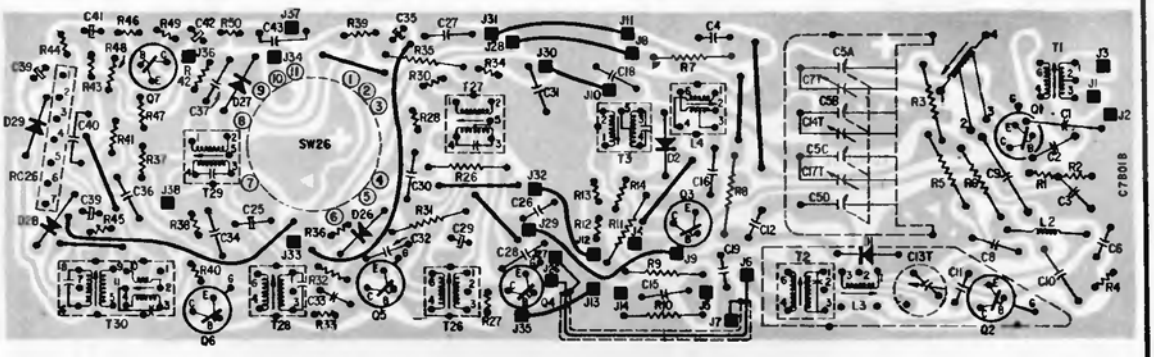

AM IF 455 KC.
FM IF 10.7 MC.

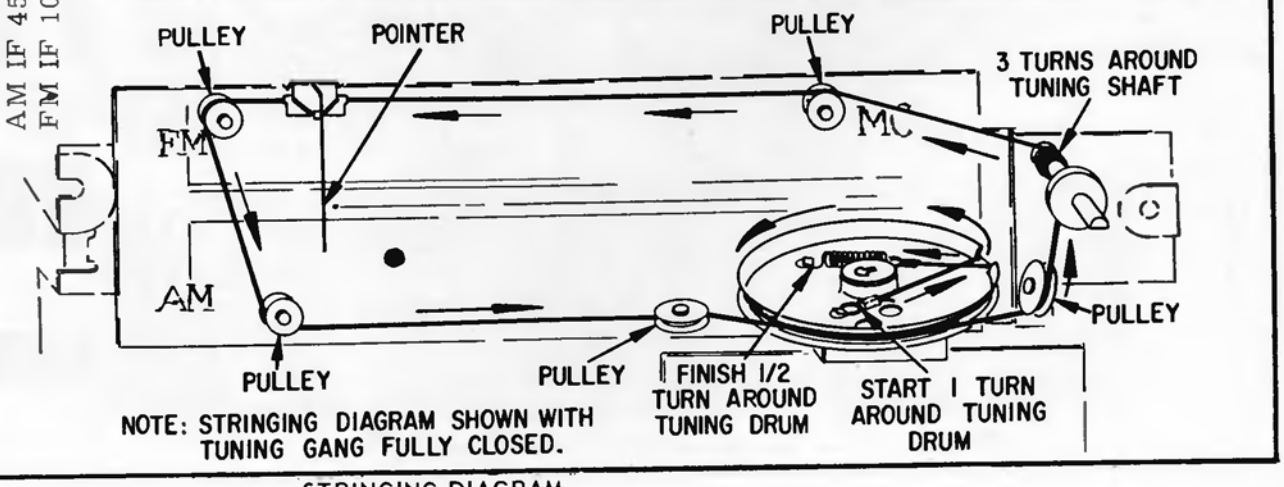


NOTE: STRINGING DIAGRAM SHOWN WITH TUNING GANG FULLY CLOSED.

STRINGING DIAGRAM

# SONY TR-8

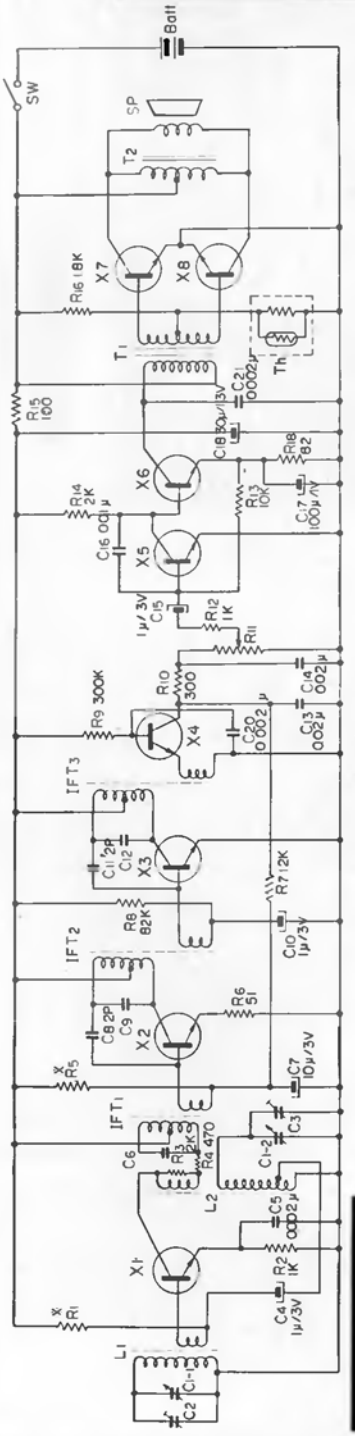


Schematic Diagram

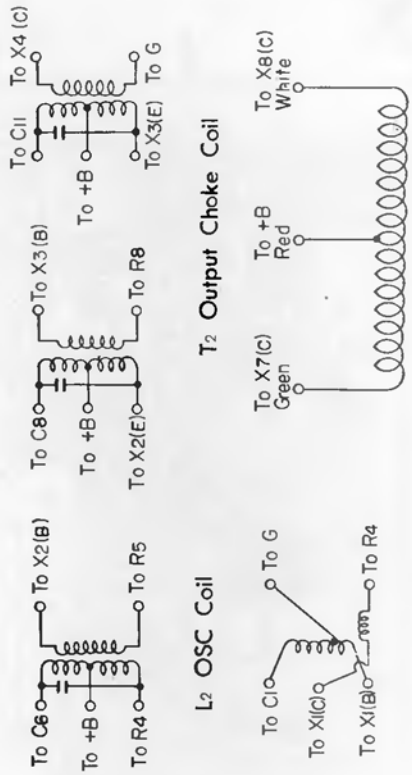


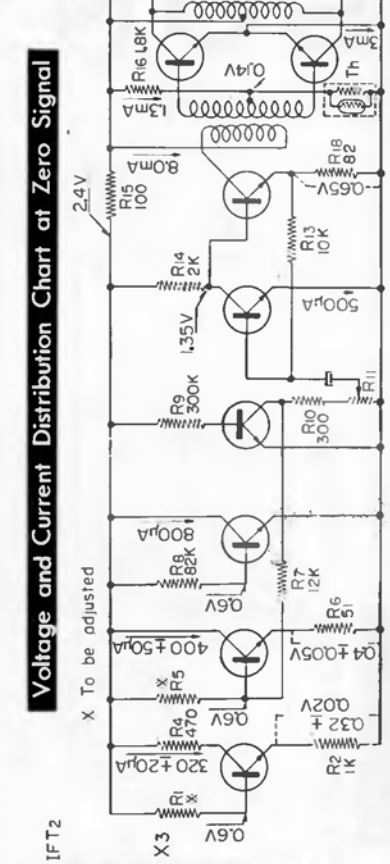


Voltage and Current Distribution Chart at Zero Signal

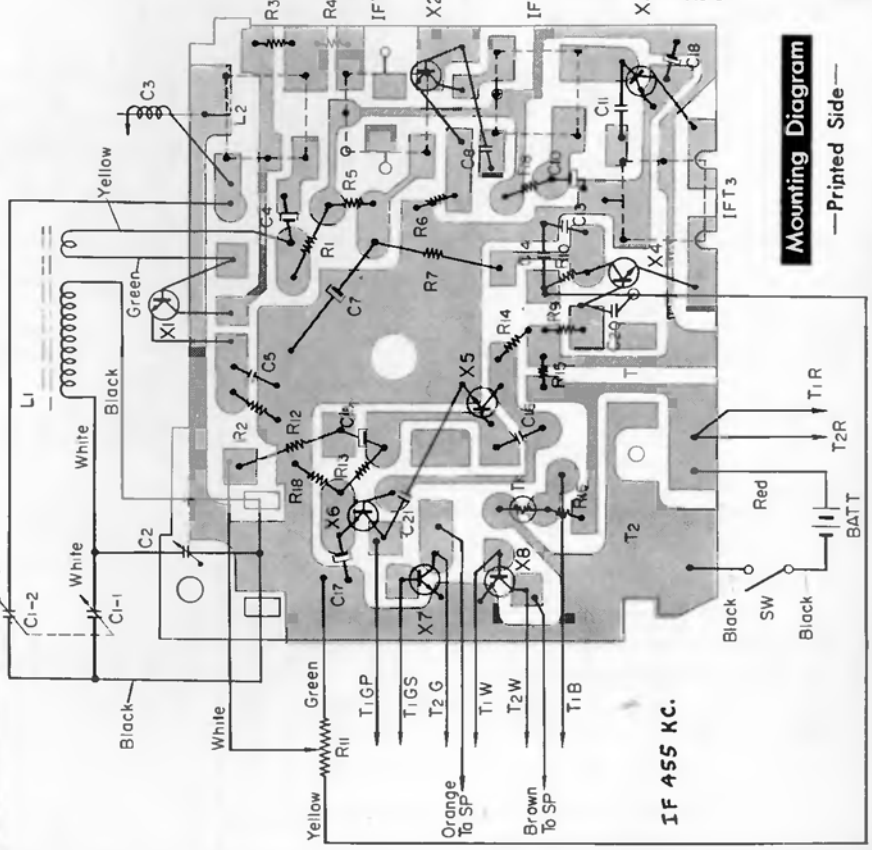


Mounting Diagram
—Printed Side—

# SONY

VOLUME R-26, MOST-OFTEN-NEEDED 1966 RADIO SERVICING INFORMATION

TR-830

## Schematic Diagram

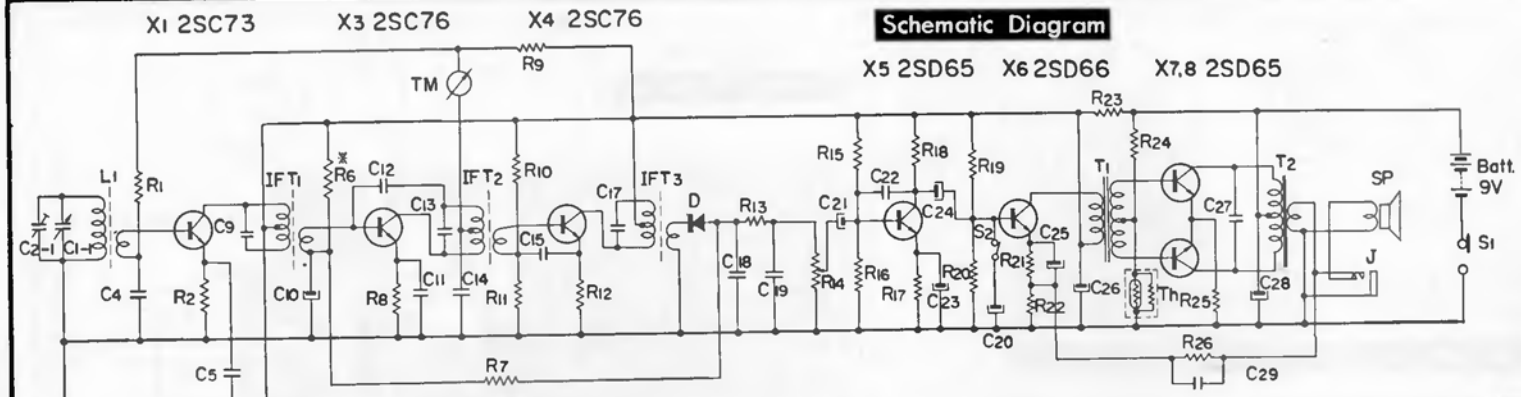


| Symbol | Description | Symbol | Description |
|---|---|---|---|
| $X_1$ | Transistor 2SC73 | $R_8$ | 470Ω 1/10W Carbon |
| $X_2$ | 〃 2SC76 | $R_9$ | 10KΩ 〃 〃 |
| $X_3$ | 〃 2SC76 | $R_{10}$ | 39KΩ 〃 〃 |
| $X_4$ | 〃 2SC76 | $R_{11}$ | 3.3KΩ 〃 〃 |
| $X_5$ | 〃 2SD65 | $R_{12}$ | 470Ω 〃 〃 |
| $X_6$ | 〃 2SD66 | $R_{13}$ | 1.8KΩ 〃 〃 |
| $X_7$ | 〃 2SD65 | $R_{14}$ | 5KΩ Volume Control |
| $X_8$ | 〃 2SD65 | $R_{15}$ | 36KΩ 1/10W Carbon |
| D | Diode 1T23G | $R_{16}$ | 5.6KΩ 〃 〃 |
| Th | Thermistor CS-120 | $R_{17}$ | 1KΩ 〃 〃 |
| | | $R_{18}$ | 1KΩ 〃 〃 |
| | **Resistor** | $R_{19}$ | 27KΩ 〃 〃 |
| $R_1$ | 10KΩ 1/10W Carbon | $R_{29}$ | 10KΩ 〃 〃 |
| $R_2$ | 30KΩ 〃 〃 | $R_{21}$ | 1KΩ 〃 〃 |
| $R_3$ | 39KΩ 〃 〃 | $R_{22}$ | 10Ω 〃 〃 |
| $R_4$ | 5.6KΩ 〃 〃 | $R_{23}$ | 220Ω 〃 〃 |
| $R_5$ | 2.2KΩ 〃 〃 | $R_{24}$ | 7.5KΩ 〃 〃 |
| *$R_9$ | 120KΩ 〃 〃 | $R_{25}$ | 10Ω 〃 〃 |
| $R_7$ | 5.6KΩ 〃 〃 | $R_{26}$ | 680Ω 〃 〃 |

| Symbol | Description |
|---|---|
| | **Capacitor** |
| $C_{1-1\sim2}$ | Tuning Capacitor, 2 gang |
| $C_{2-1\sim2}$ | Trimmer Capacitor, 2 unit |
| $C_4$ | 0.02μF Ceramic |
| $C_5$ | 0.002μF Mylar |
| $C_6$ | 0.002μF 〃 |
| $C_7$ | 0.01μF Ceramic |
| $C_8$ | 130PF Styrol |
| $C_9$ | 150PF (built in $IFT_1$) |
| $C_{10}$ | 10μF 3V Electrolytic |
| $C_{11}$ | 0.02μF Ceramic |
| $C_{12}$ | 1PF 〃 |
| $C_{13}$ | 150PF (built in $IFT_2$) |
| $C_{14}$ | 0.01μF Ceramic |
| $C_{15}$ | 0.01μF 〃 |
| $C_{17}$ | 150PF (built in $IFT_3$) |
| $C_{18}$ | 0.02μF Ceramic |
| $C_{19}$ | 0.01μF 〃 |
| $C_{20}$ | 0.3μF 15V Electrolytic |
| $C_{21}$ | 10μF 3V 〃 |
| $C_{22}$ | 0.005μF Mylar |
| $C_{23}$ | 10μF 3V Electrolytic |
| $C_{24}$ | 10μF 6V 〃 |
| $C_{25}$ | 30μF 3V 〃 |
| $C_{26}$ | 30μF 10V 〃 |
| $C_{27}$ | 0.04μF Ceramic |
| $C_{28}$ | 50μF 10V Electrolytic |
| $C_{29}$ | 0.02μF Ceramic |

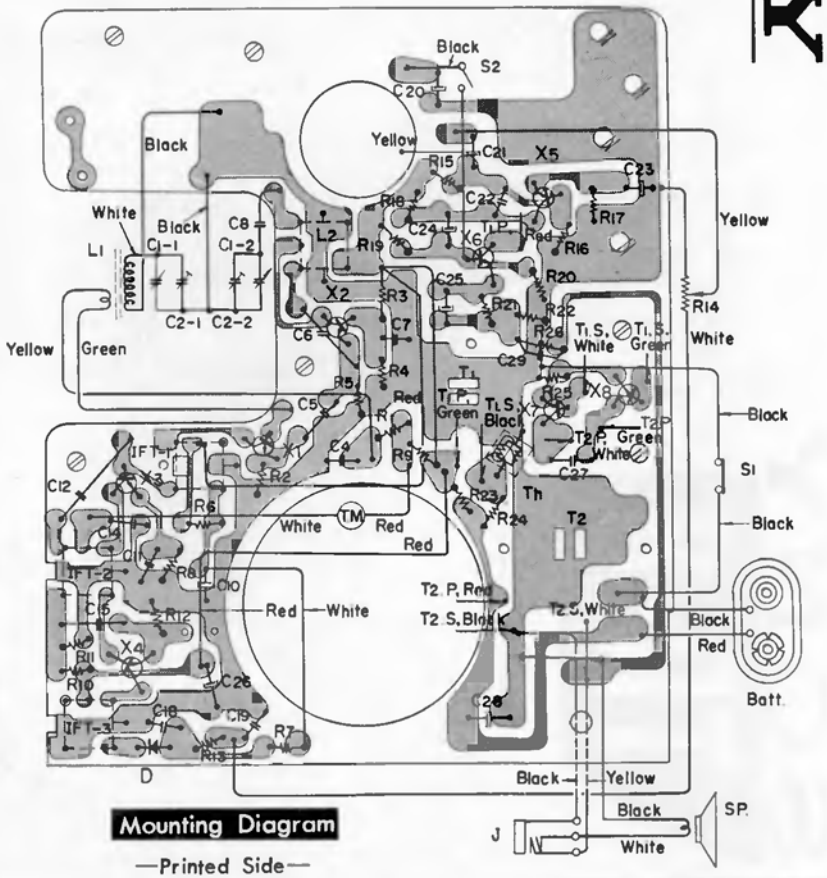


## Mounting Diagram

—Printed Side—

* To be adjusted

C29 is mounted on the printed side.

# SYLVANIA

Chassis U50-1, -2
Models AK45, AK46, AT40

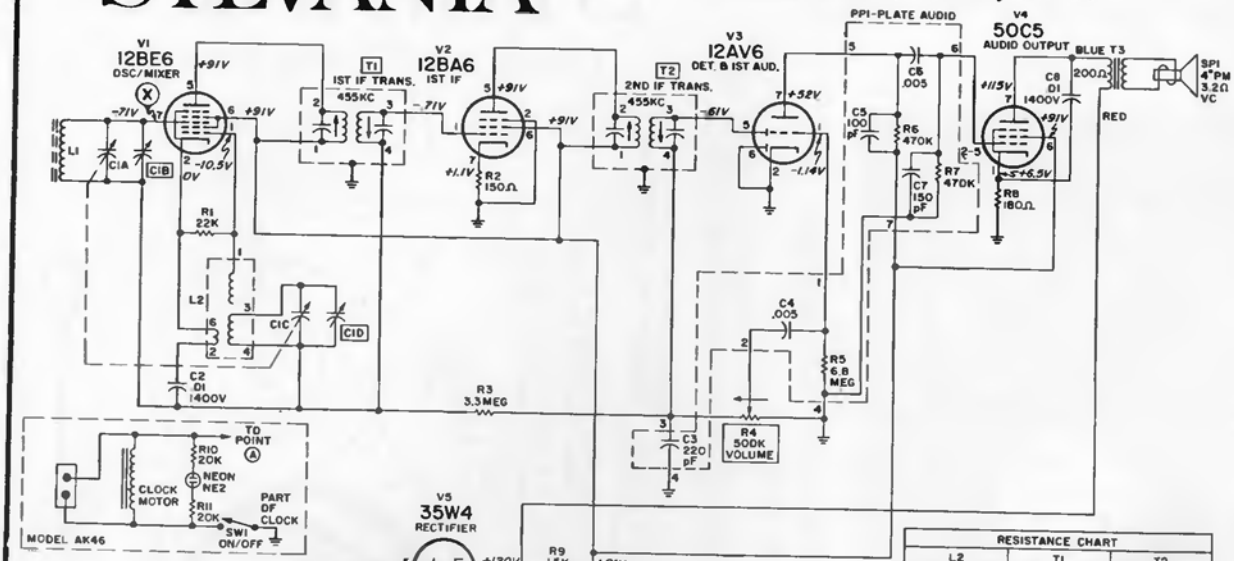


| RESISTANCE CHART | | | | | |
|---|---|---|---|---|---|
| L2 | | T1 | | T2 | |
| BETWEEN | RES. | BETWEEN | RES. | BETWEEN | RES. |
| 2 & 6 | 1Ω | 1 & 2 | 18Ω | 1 & 2 | 18Ω |
| 3 & 4 | 12Ω | 3 & 4 | 18Ω | 3 & 4 | 18Ω |

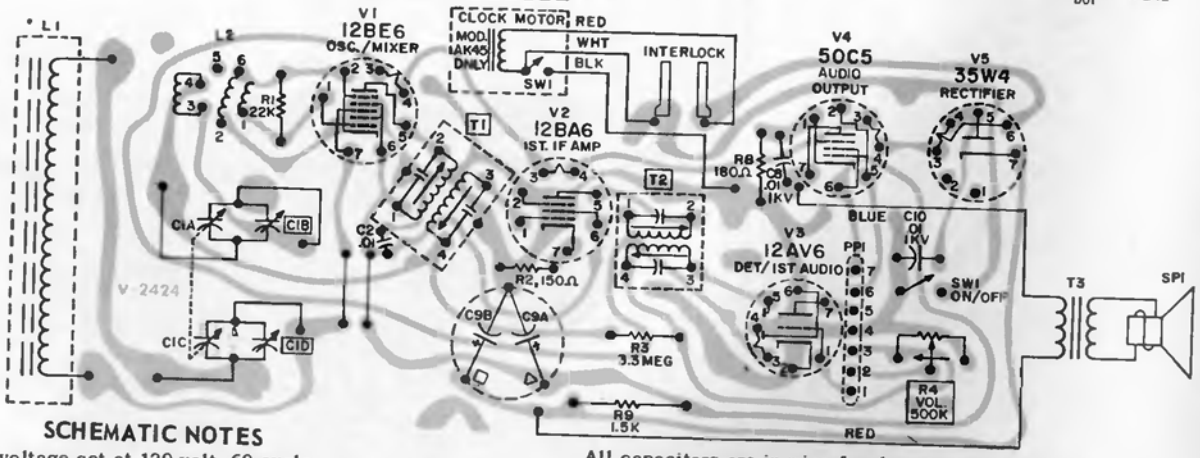


## SCHEMATIC NOTES

Line voltage set at 120 volt, 60 cycle.
Voltages shown are average readings measured to chassis ground with no signal, minimum volume setting and variable capacitor fully open.

All capacitors are in microfarads unless otherwise specified.
All resistors are 10%, 1/2 watt unless otherwise specified.
Intermediate frequency (IF), 455 KC.
⏚ designates chassis ground.
Arrow on volume control indicates clockwise direction.

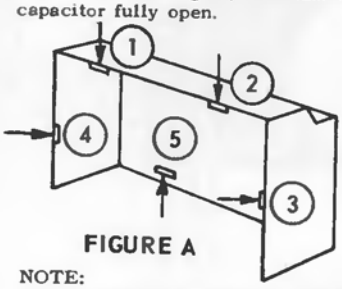


FIGURE A

FIGURE B

FIGURE C

NOTE:
THE CABINET SECTIONS ARE HELD TOGETHER WITH SNAP TABS SHOWN BY ARROWS. SEE FIGURES A AND C.

# SYLVANIA

Chassis 325-1, Model TR50

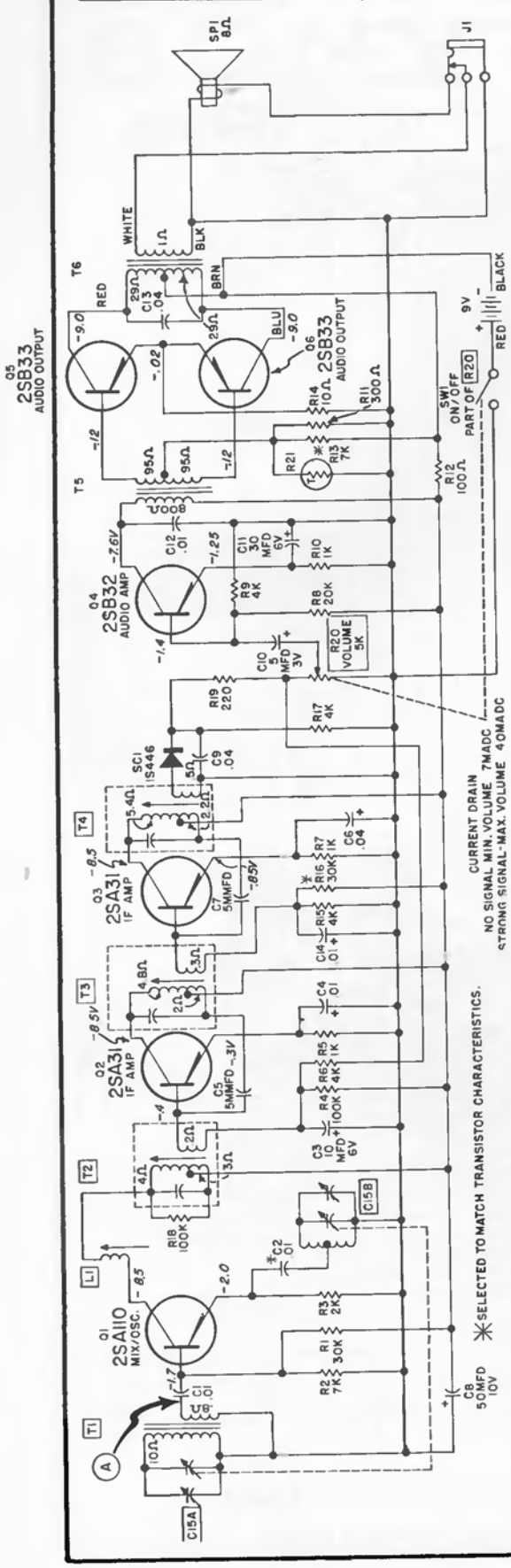


## SCHEMATIC NOTES

1. Voltage measured to positive (red) battery connector, with receiver tuned to off station.
2. Operating voltage must be 9 volts DC. (Employ battery eliminator).
3. Voltages shown are average readings. Variations may be noted due to normal production tolerance (±10%)
4. All voltage readings taken with RCA Volt-Ohmyst (WV - 97A).
5. All capacitors in microfarads unless otherwise specified.
6. Intermediate frequency (IF), 455 KC.
7. Resistance readings taken with components is circuit.

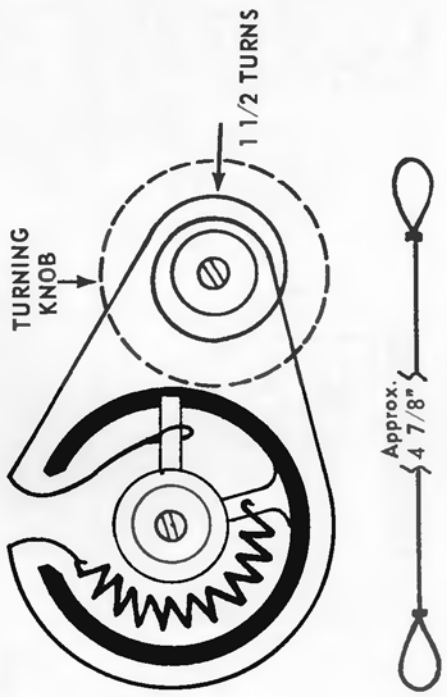


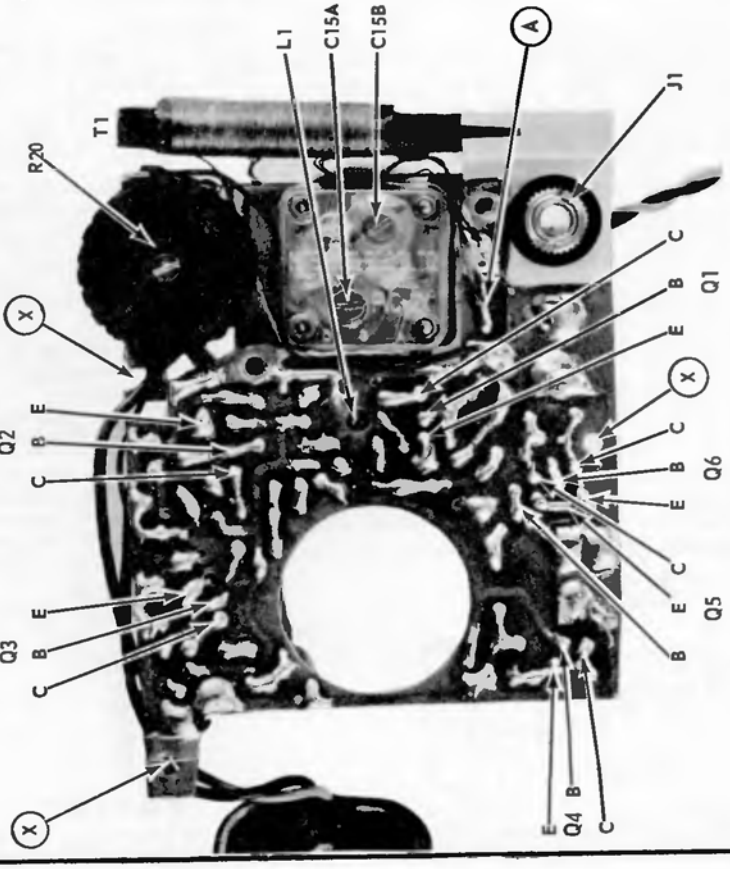

## SYLVANIA
Chassis 328-1, Model TR54

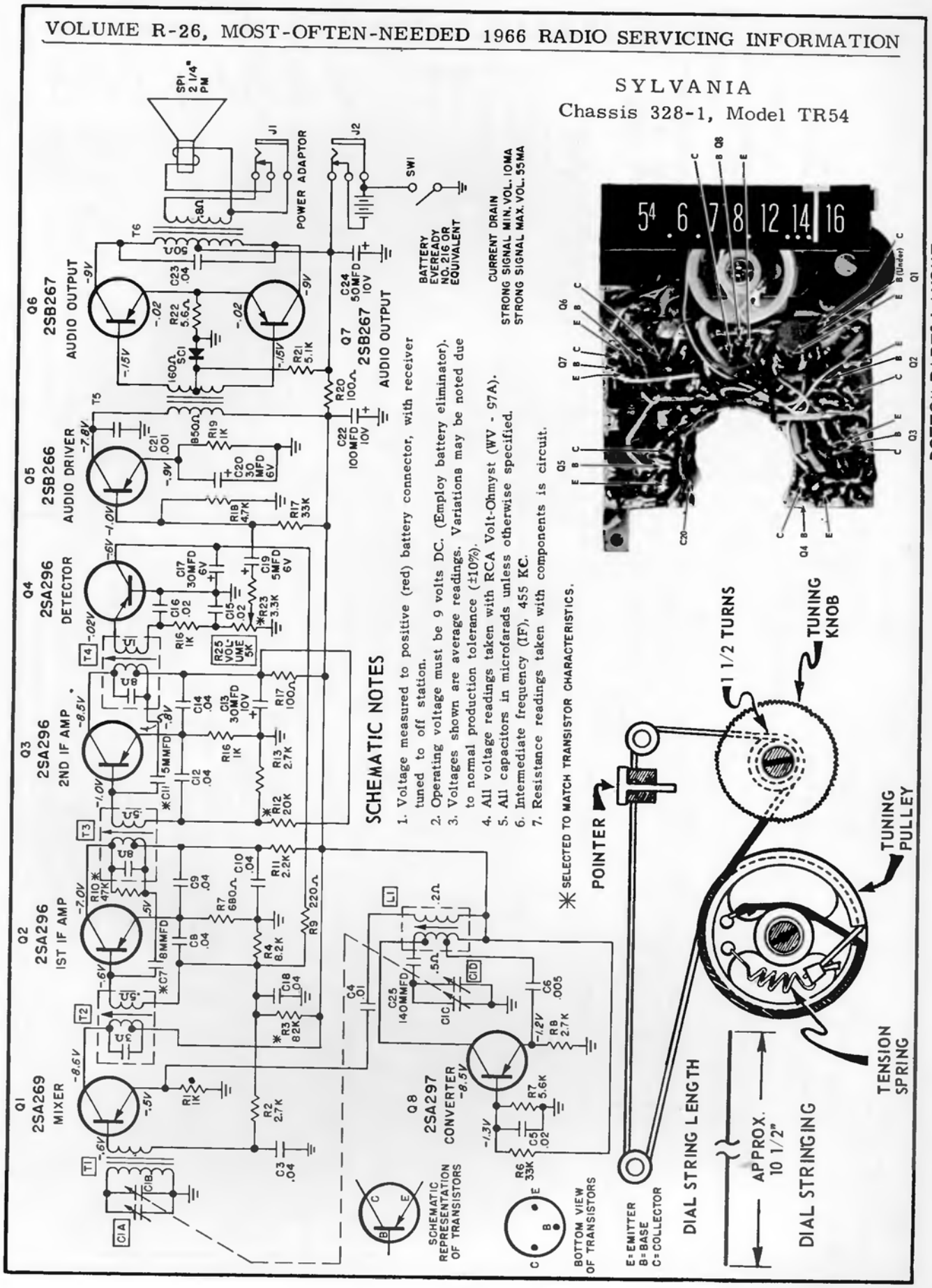

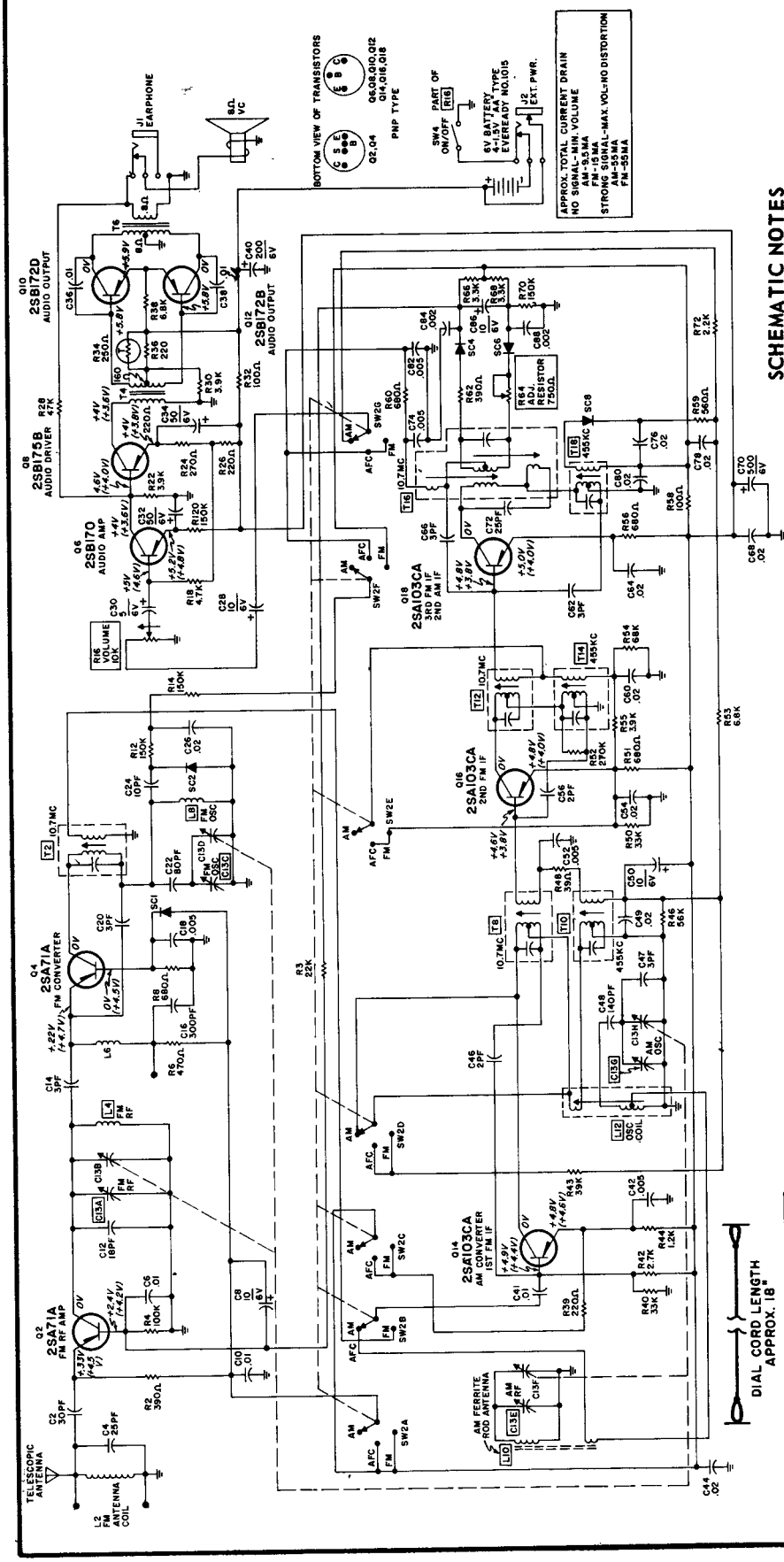


## SCHEMATIC NOTES

1. Voltages measured to chassis ground, test point (2), with receiver tuned to off station and minimum volume.
2. Operating voltage must be 6 volts DC. (Employ battery eliminator).
3. Voltages shown are average readings. Voltages in brackets are measured with switch in FM position.
4. Switch SW2 is shown in the AM position.
5. All capacitors in microfarads unless otherwise specified.
6. All resistors are 1/4W - 10% unless otherwise specified.
7. Resistance readings taken with components in circuit.
8. Arrow on volume control indicates clockwise rotation.

# SYLVANIA

Chassis 335-1, Model TR86

## CHASSIS REMOVAL

1. Remove three (3) knobs; two (2) front knobs and the one (1) side knob by pulling straight out.
2. Open back cover flap by unsnapping the fasteners at bottom rear of case.
3. Unsnap battery holder and remove from case.
4. Remove two (2) screws securing battery compartment. Remove compartment from case.
5. Remove earphone and ext. pwr. jack assembly from case.
6. Remove six (6) screws (indicated by ⊗ on top parts layout) securing chassis to case. Remove one (1) screw (located on bottom of case) securing telescopic antenna to case.
7. Remove chassis and set to one side of case. If necessary unsolder leads to speaker.
8. To replace chassis reverse the above procedure.

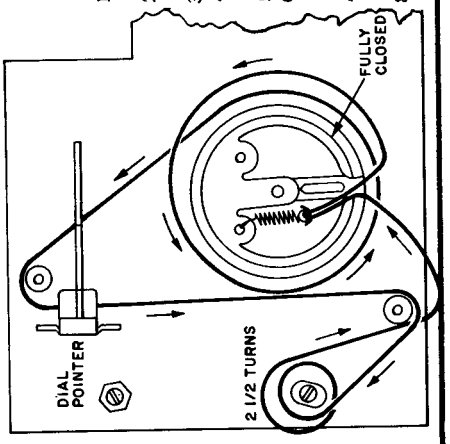


## DIAL STRINGING

# SYLVANIA

Chassis P01-1
Model 45P50

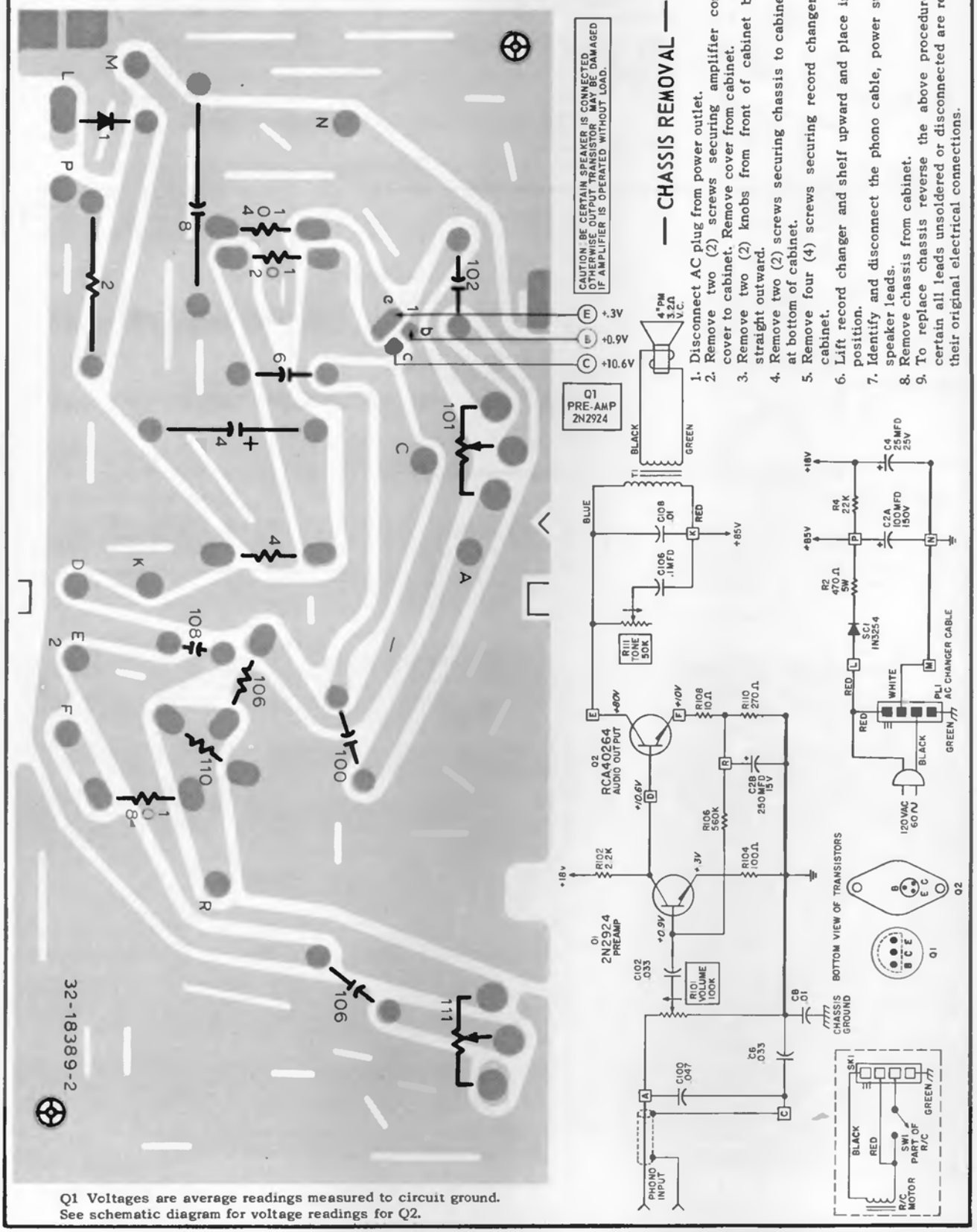


## — CHASSIS REMOVAL —

1. Disconnect AC plug from power outlet.
2. Remove two (2) screws securing amplifier compartment cover to cabinet. Remove cover from cabinet.
3. Remove two (2) knobs from front of cabinet by pulling straight outward.
4. Remove two (2) screws securing chassis to cabinet located at bottom of cabinet.
5. Remove four (4) screws securing record changer shelf to cabinet.
6. Lift record changer and shelf upward and place in vertical position.
7. Identify and disconnect the phono cable, power supply and speaker leads.
8. Remove chassis from cabinet.
9. To replace chassis reverse the above procedure making certain all leads unsoldered or disconnected are replaced in their original electrical connections.

Q1 Voltages are average readings measured to circuit ground.
See schematic diagram for voltage readings for Q2.

## SYLVANIA Chassis P02-1, Model 45P60

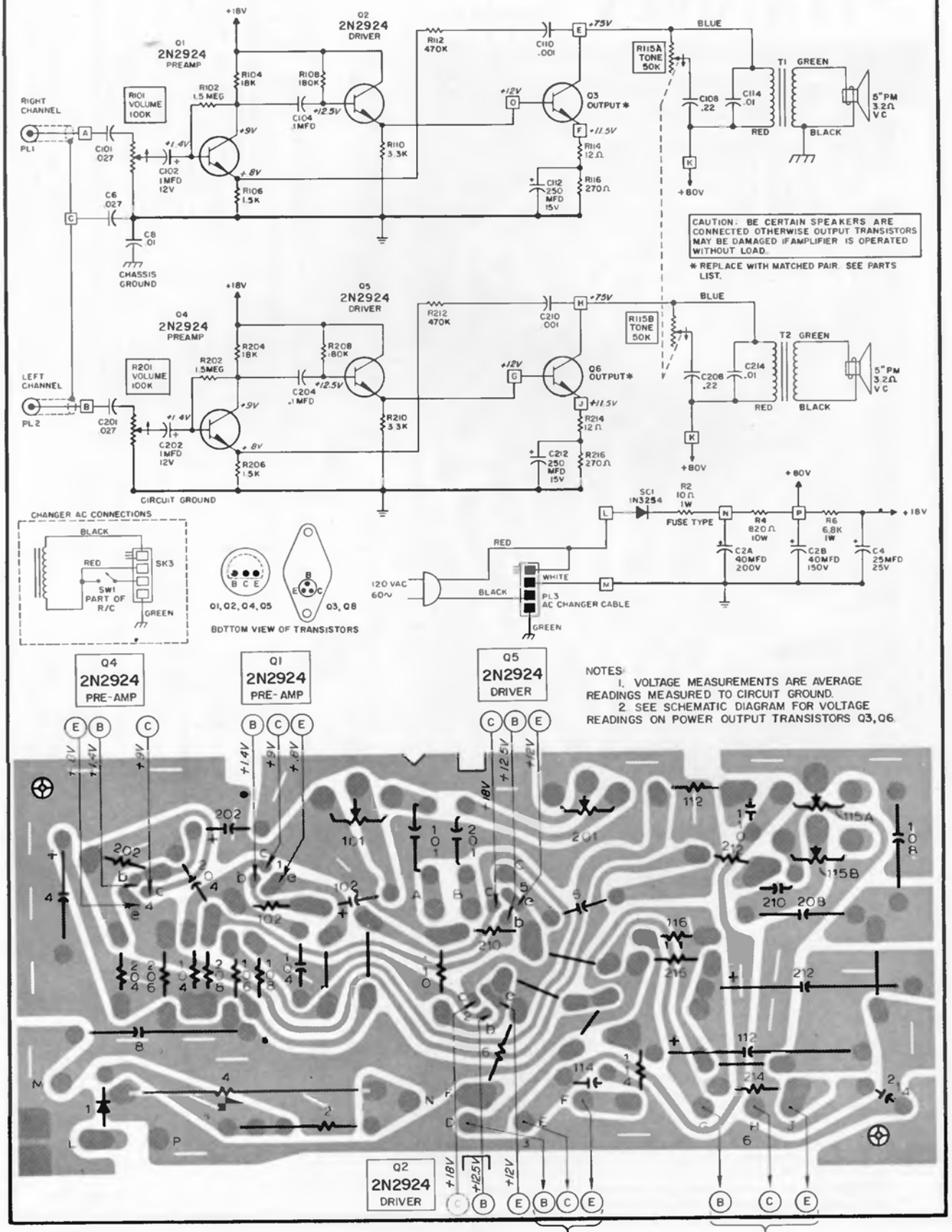


NOTES:
1. VOLTAGE MEASUREMENTS ARE AVERAGE READINGS MEASURED TO CIRCUIT GROUND.
2. SEE SCHEMATIC DIAGRAM FOR VOLTAGE READINGS ON POWER OUTPUT TRANSISTORS Q3, Q6.

SYLVANIA

Chassis P03-1
Model 45P61

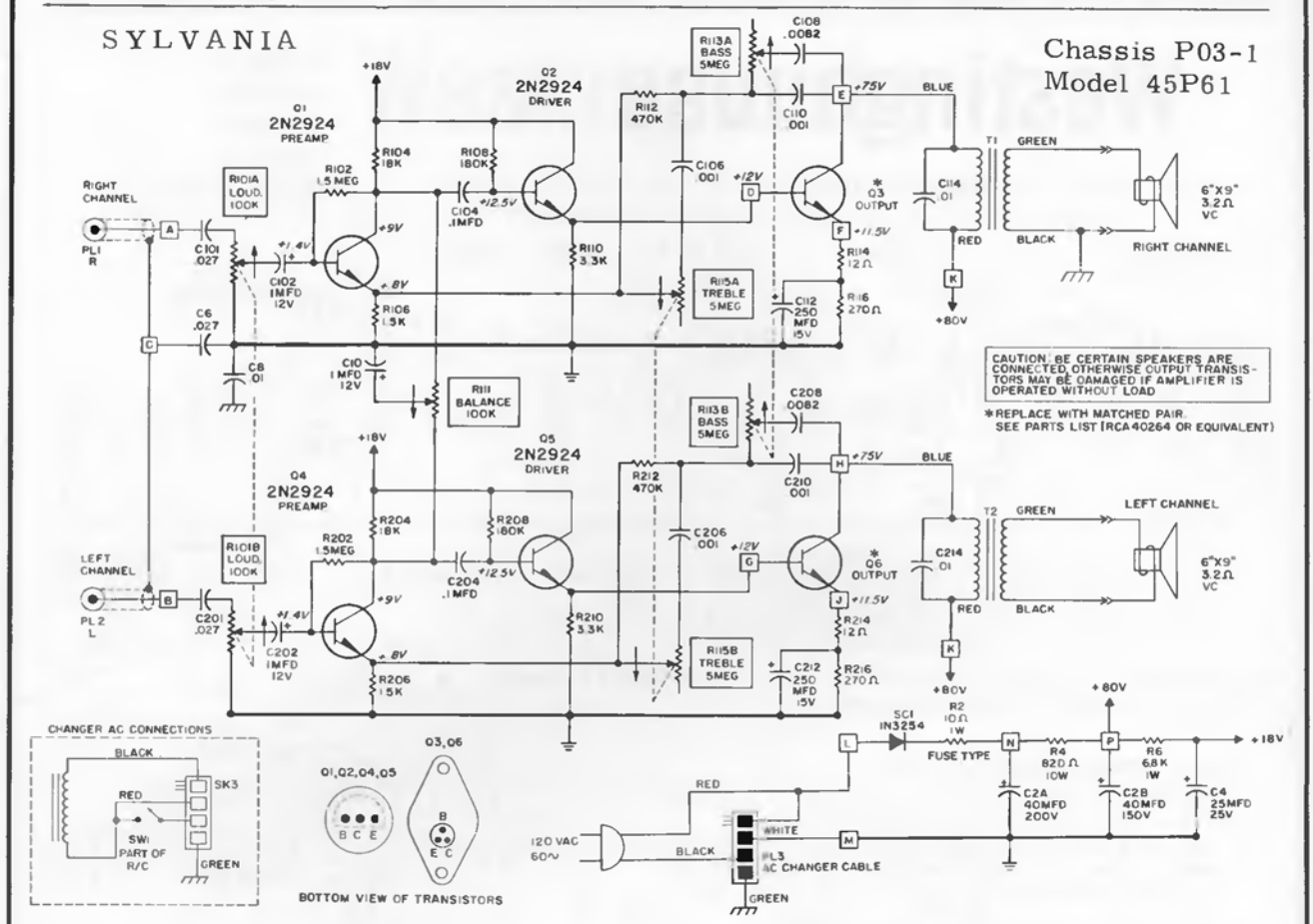


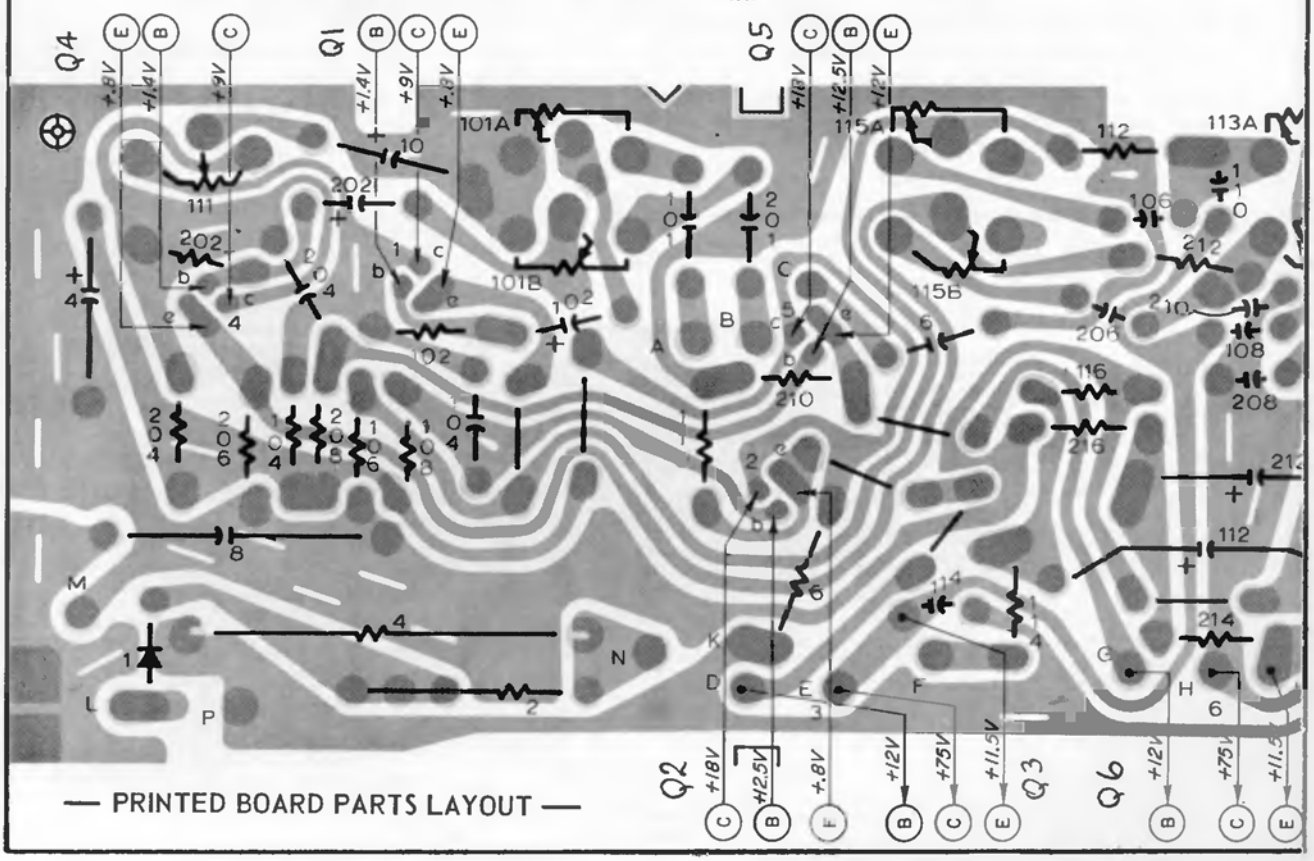


— PRINTED BOARD PARTS LAYOUT —

# Westinghouse

H-954P6
H-955P6
H-956L6
H-957L6
H-958L6

CHASSIS V-2463-1, -2

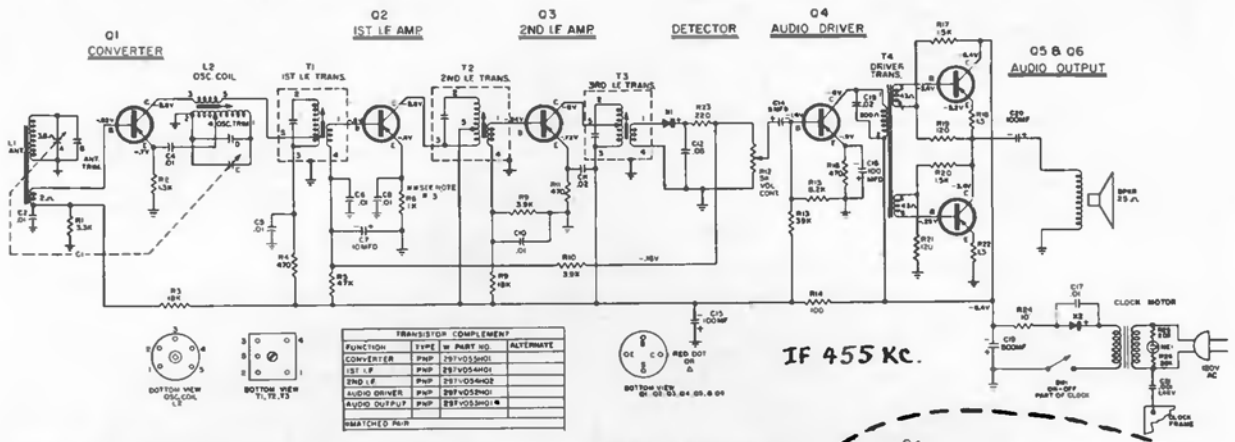


V-2463-1 Schematic

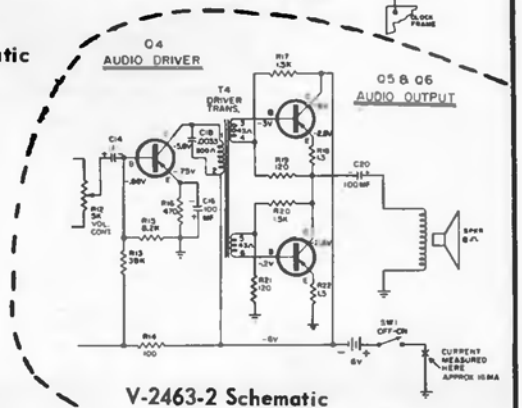


V-2463-2 Schematic

### CHASSIS REMOVAL H-954P6, H-955P6

The cabinet front and back are held together by 4 tabs molded on the top and bottom rim of the cabinet back.

1. Pry the bottom of the cabinet apart to release the two bottom tabs and carefully separate the two sections. CAUTION: the battery housing is mounted to the cabinet back.
2. The volume and tuning knobs are mounted to the PC board which comes out with the cabinet front.
3. Unsolder the two leads to the speaker.
4. Remove the hex head screw and mounting stud (located under the PC board) from the cabinet front and slide the chassis to the rear.

**V-2463-1 PC Board showing top components in solid outline.**

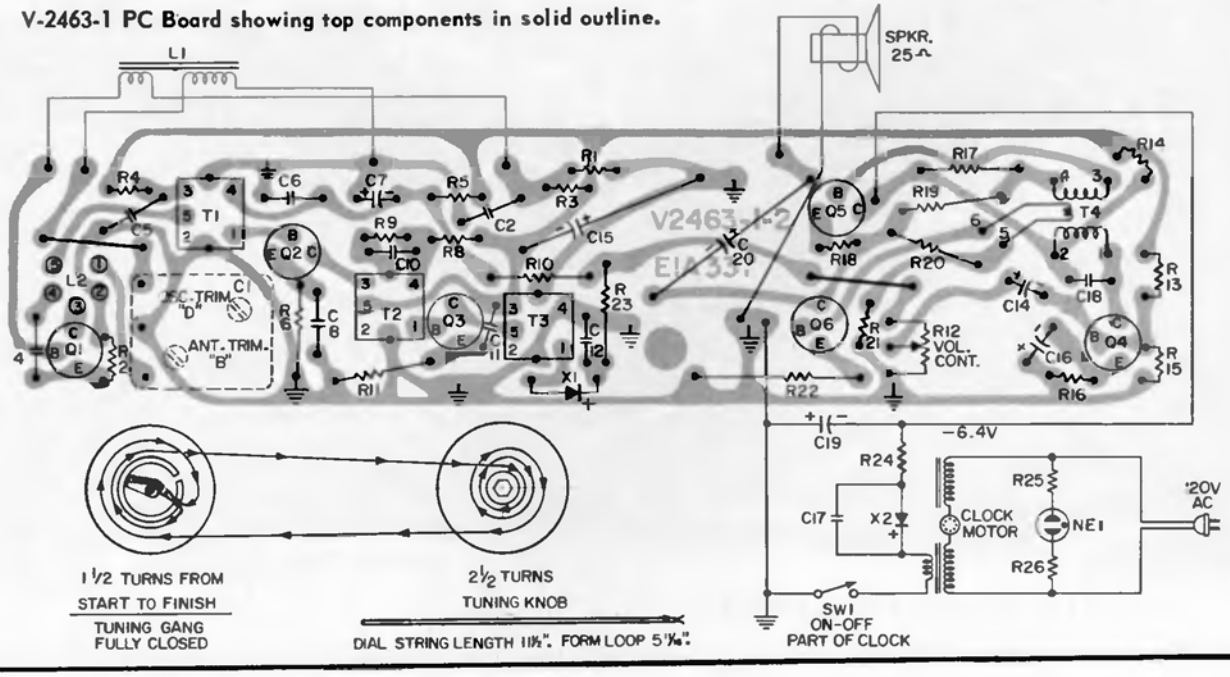

# Westinghouse

Chassis V-2463-3, Models H-957L6A, H-958L6A, Chassis V-2463-4, used in Model H-957L6B, and Chassis V-2463-6, Models CR525, CR526.

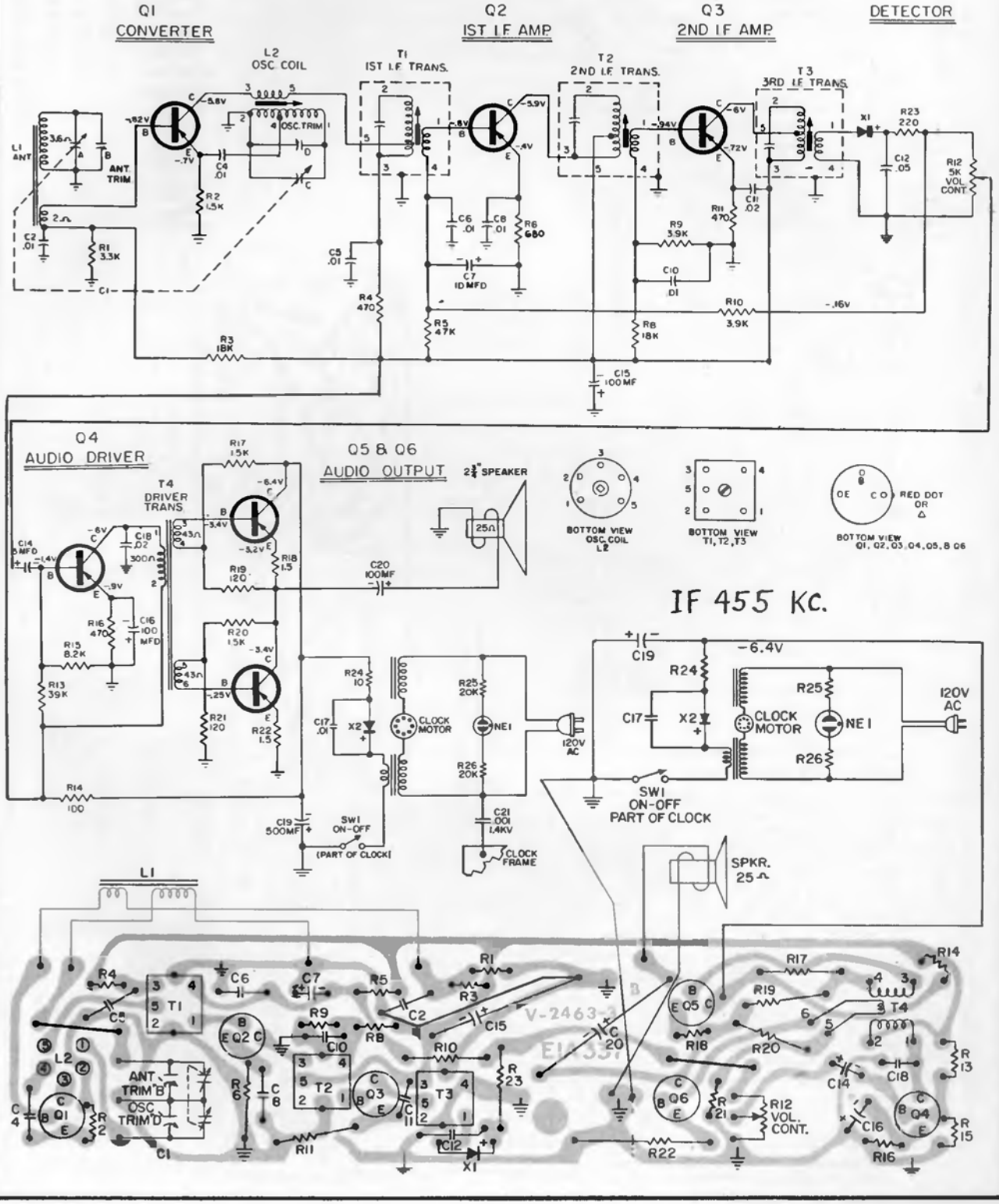


Bottom View of PC Board Showing Top Components In Solid Outline.

# Westinghouse

H-970X
H-972XL
H-974XL
CHASSIS V-2463-5

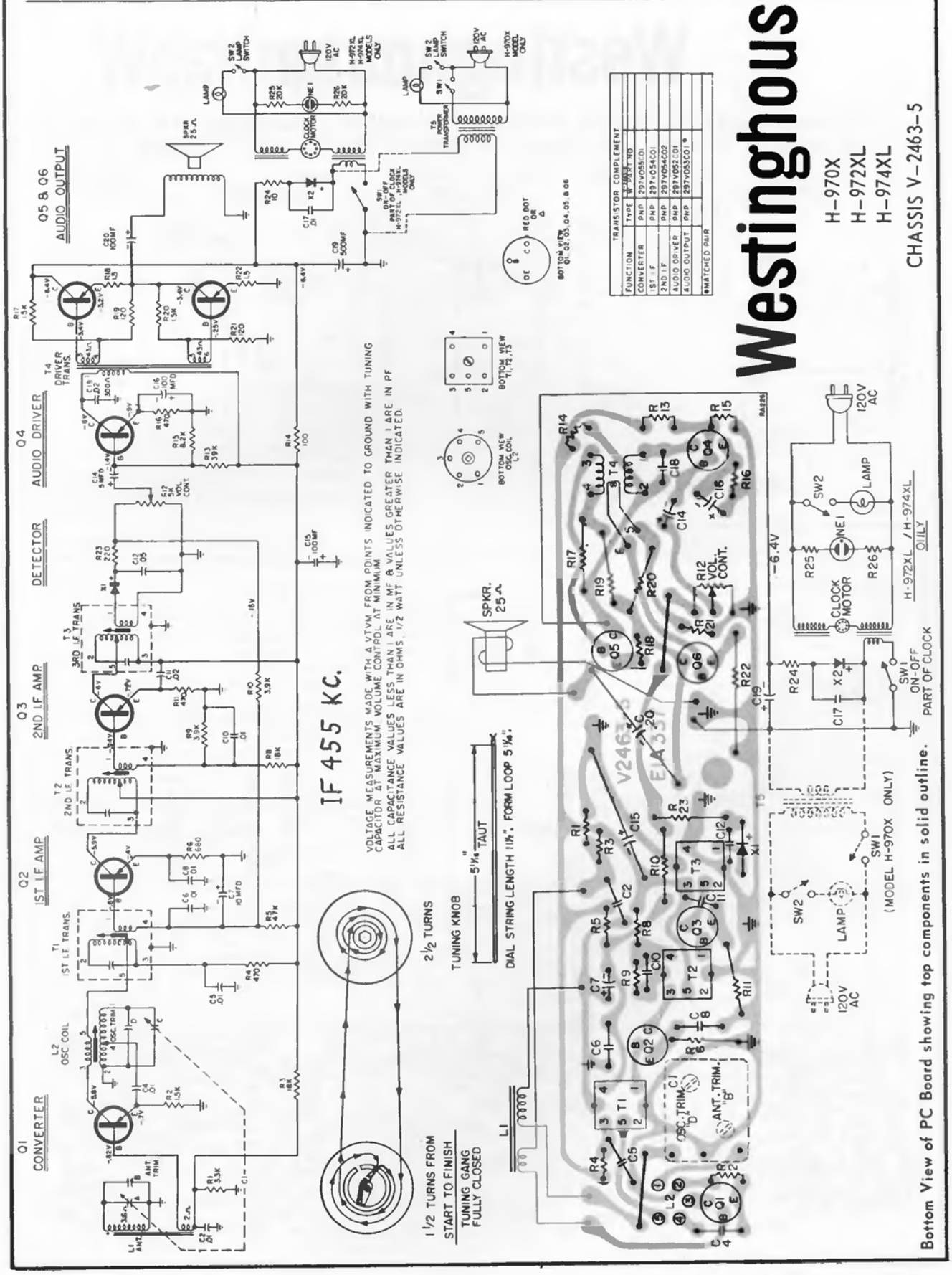


Bottom View of PC Board showing top components in solid outline.

# Westinghouse

Chassis V-2466-1, -2, used in Models H-200T5, H-201T5, H-205L5, H-210L5, H-211L5, H-215L5, H-216L5, CR-500, and CR-501. Chassis V-2466-7 used in Models CR-515, CR-520, CR-521, is identical except for clock circuit.

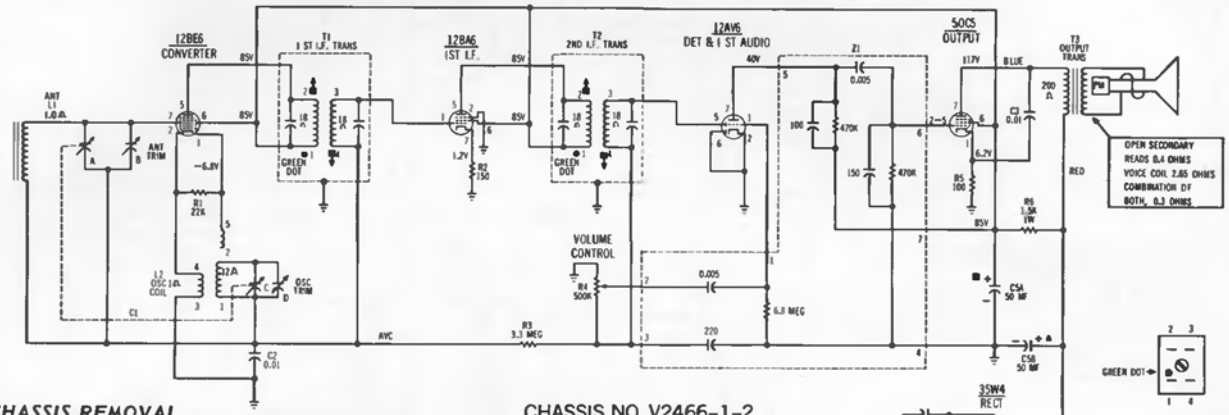


CHASSIS NO. V2466-1-2

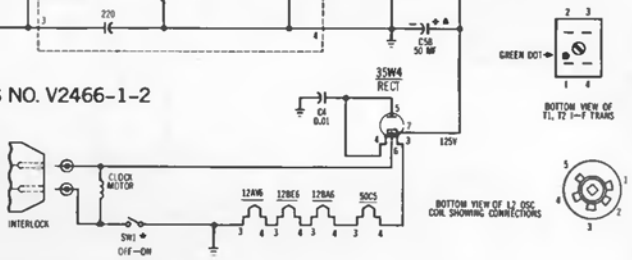


NOTES
1. ALL VOLTAGES MEASURED FROM COMMON B—TO POINTS INDICATED WITH V.T.V.M. LINE VOLTAGE SET AT 120 V.A.C. READINGS SHOULD BE AS SHOWN ±20% NO SIGNAL.
2. ALL CAPACITANCE VALUES LESS THAN 1, ARE IN MF AND VALUES GREATER THAN 1 ARE IN PF, ALL RESISTANCE VALUES ARE IN OHMS 0.5 WATT UNLESS OTHERWISE INDICATED.

* V—2466—2 SW1 IS PART OF CLOCK
V—2466—1 SW1 IS PART OF B4.

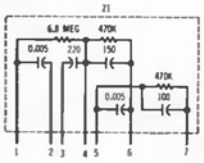


### CHASSIS REMOVAL

1. Remove the back cover.
2. Remove the volume knob.
3. Release the tuning knob from the tuning capacitor. CAUTION: The tuning knob is captivated to the cabinet front.
4. Lift the PC board at the rear, to clear the square bar on the cabinet bottom, and slide the chassis to the rear.
5. It may be necessary to unsolder the leads from the clock and speaker before the chassis can be completely removed from the chassis.
6. To reassemble the chassis to the cabinet, reverse the above procedure. It may be necessary to force the front edge of the PC board down into the mounting slots provided in the cabinet front. This can be accomplished by applying pressure to the electrolytic.

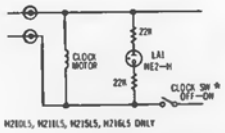


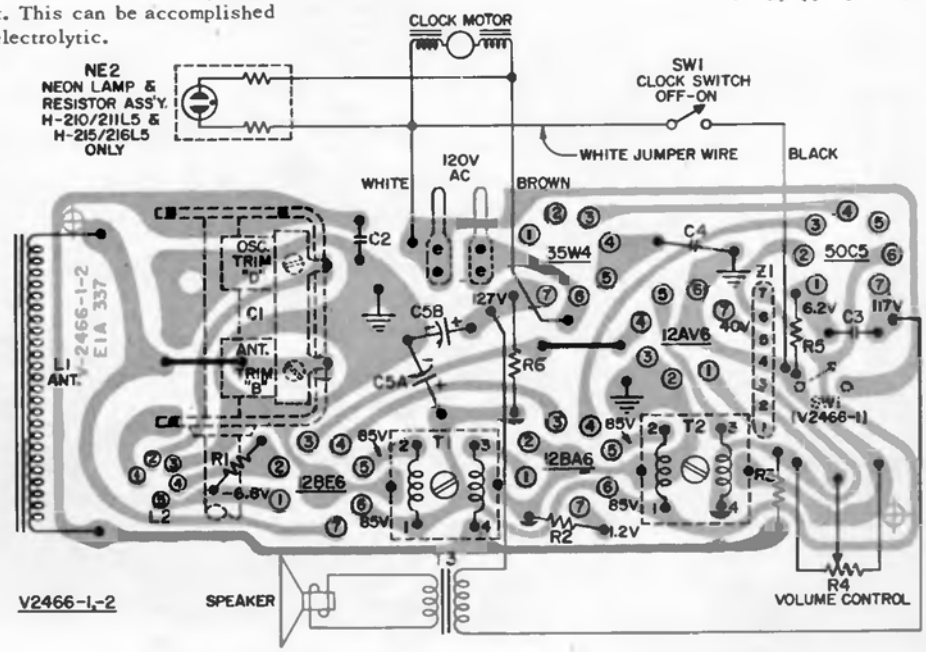

H-215L5 – H-216L5

Bottom View of PC Board showing top components in solid outline.

# Westinghouse

MODEL CR-566

MODEL H-953XP8

CHASSIS V-2580-1

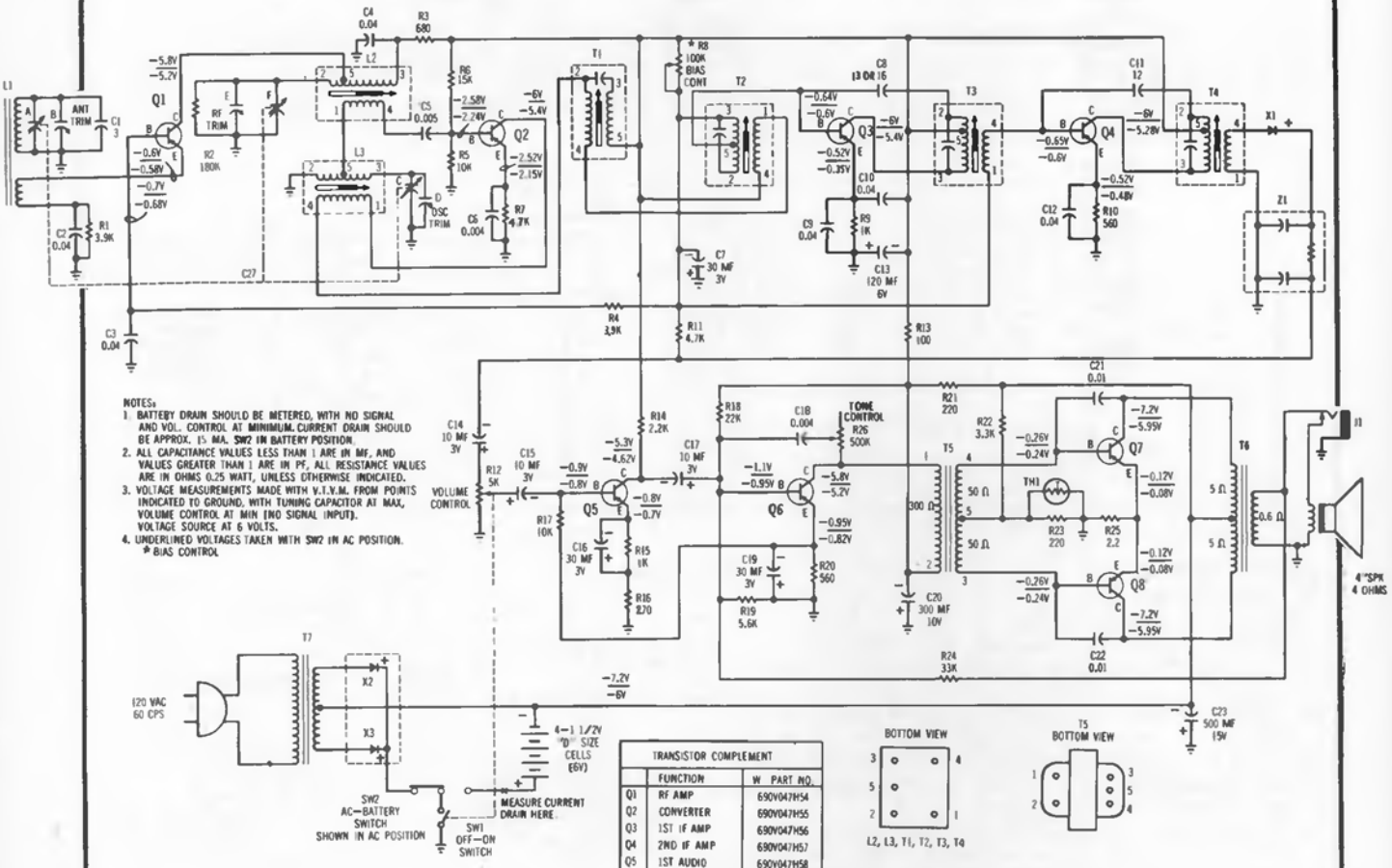


NOTES:
1. BATTERY DRAIN SHOULD BE METERED, WITH NO SIGNAL AND VOL. CONTROL AT MINIMUM. CURRENT DRAIN SHOULD BE APPROX. 15 MA. SW2 IN BATTERY POSITION.
2. ALL CAPACITANCE VALUES LESS THAN 1 ARE IN MF, AND VALUES GREATER THAN 1 ARE IN PF, ALL RESISTANCE VALUES ARE IN OHMS 0.25 WATT, UNLESS OTHERWISE INDICATED.
3. VOLTAGE MEASUREMENTS MADE WITH V.T.V.M. FROM POINTS INDICATED TO GROUND, WITH TUNING CAPACITOR AT MAX, VOLUME CONTROL AT MIN (NO SIGNAL INPUT). VOLTAGE SOURCE AT 6 VOLTS.
4. UNDERLINED VOLTAGES TAKEN WITH SW2 IN AC POSITION.
* BIAS CONTROL

| TRANSISTOR COMPLEMENT | | |
|---|---|---|
| | FUNCTION | W PART NO. |
| Q1 | RF AMP | 690V047H54 |
| Q2 | CONVERTER | 690V047H55 |
| Q3 | 1ST IF AMP | 690V047H56 |
| Q4 | 2ND IF AMP | 690V047H57 |
| Q5 | 1ST AUDIO | 690V047H58 |
| Q6 | AUDIO DRIVER | 690V047H58 |
| Q7 | AUDIO OUTPUT * | 690V047H60 |
| Q8 | AUDIO OUTPUT * | |
| * | MATCHED PAIR | |

## SPECIFICATIONS

AM Frequency Range . . . . . .540KC to 1600KC
AM Intermediate Frequency . . . . . .455KC
Power Output, Maximum . . . . . .300mw
Speaker . . . . . 4" PM, 4-ohm voice coil
No-Signal Current Drain . . . . . .15ma

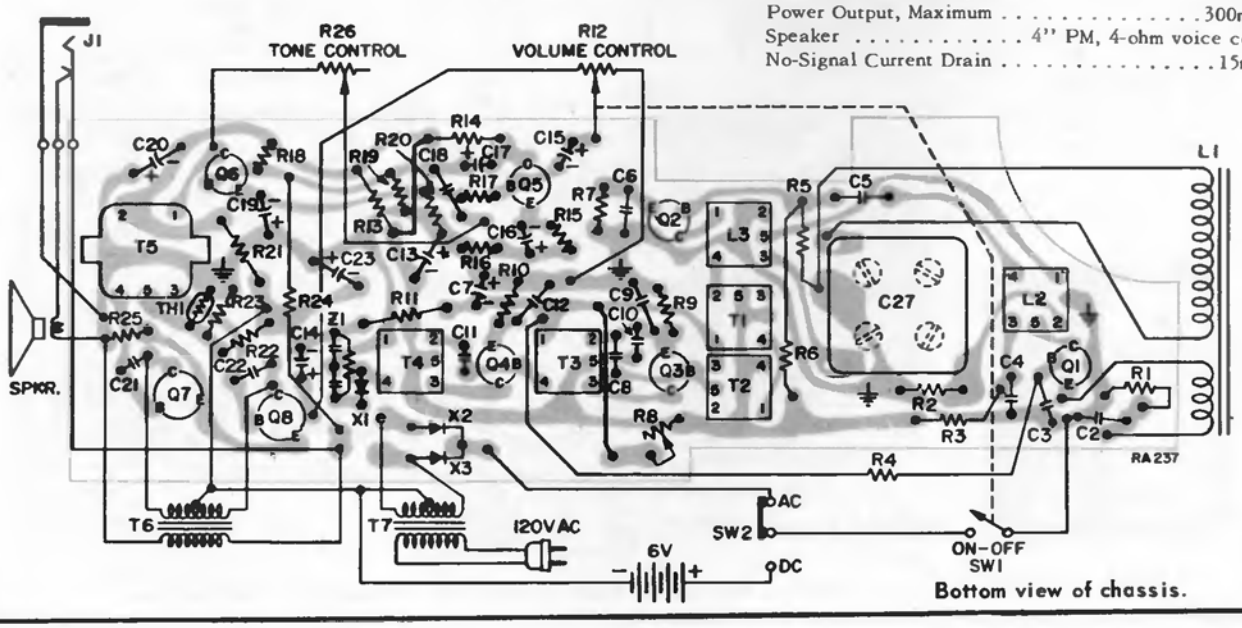


Bottom view of chassis.

# Westinghouse

H-968PL

CHASSIS V-2585-1

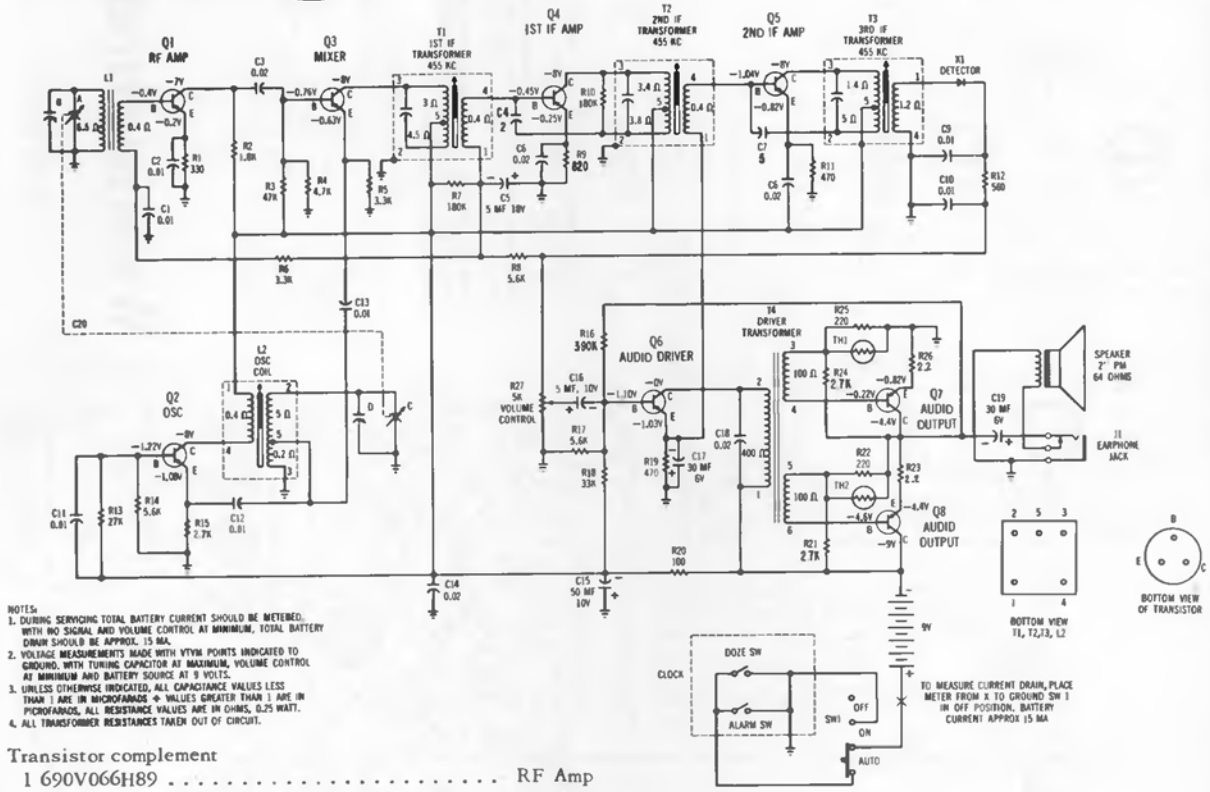


NOTES:
1. DURING SERVICING TOTAL BATTERY CURRENT SHOULD BE METERED. WITH NO SIGNAL AND VOLUME CONTROL AT MINIMUM, TOTAL BATTERY DRAIN SHOULD BE APPROX. 15 MA.
2. VOLTAGE MEASUREMENTS MADE WITH VTVM POINTS INDICATED TO GROUND. WITH TUNING CAPACITOR AT MAXIMUM, VOLUME CONTROL AT MINIMUM AND BATTERY SOURCE AT 9 VOLTS.
3. UNLESS OTHERWISE INDICATED, ALL CAPACITANCE VALUES LESS THAN 1 ARE IN MICROFARADS + VALUES GREATER THAN 1 ARE IN PICROFARADS, ALL RESISTANCE VALUES ARE IN OHMS, 0.25 WATT.
4. ALL TRANSFORMER RESISTANCES TAKEN OUT OF CIRCUIT.

Transistor complement

| | |
|---|---|
| 1 690V066H89 | RF Amp |
| 1 690V066H89 | Osc |
| 1 690V066H89 | Mixer |
| 1 690V034H29 | 1st IF Amp |
| 1 690V034H29 | 2nd IF Amp |
| 1 690V043H63 | Audio Driver |
| 2 690V043H62 (matched pair) | Audio Output |

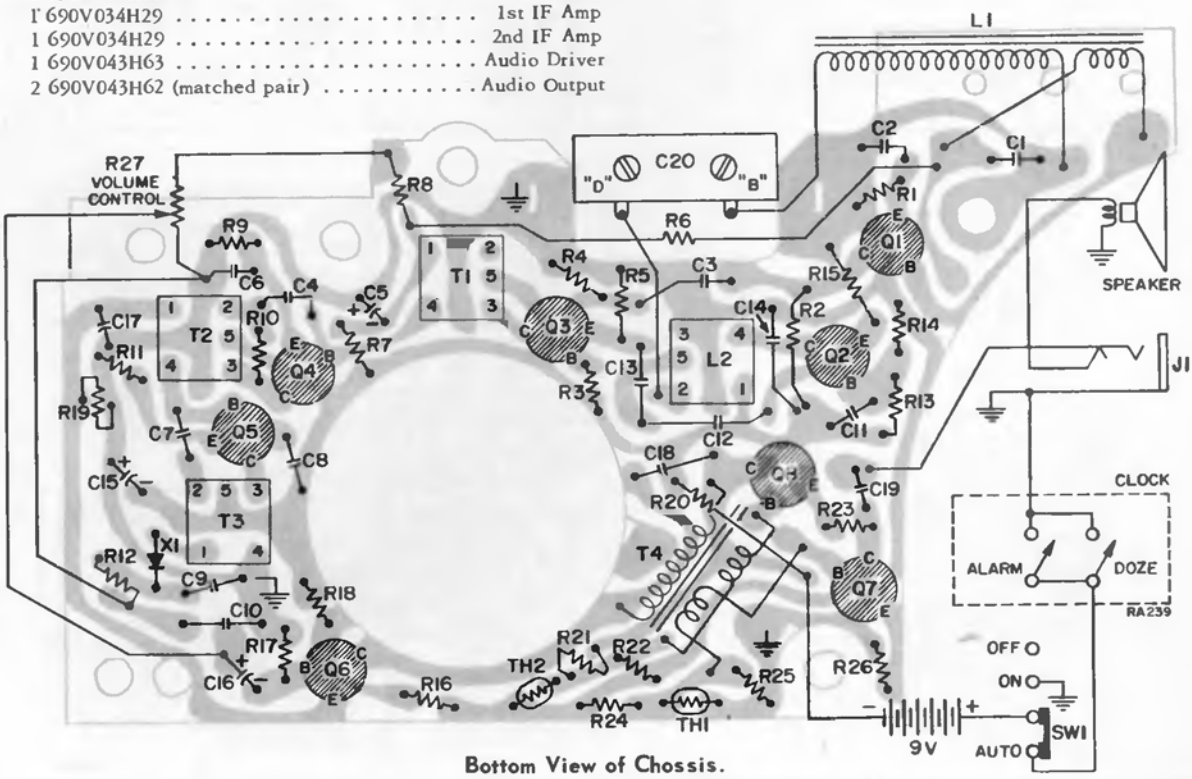


Bottom View of Chassis.

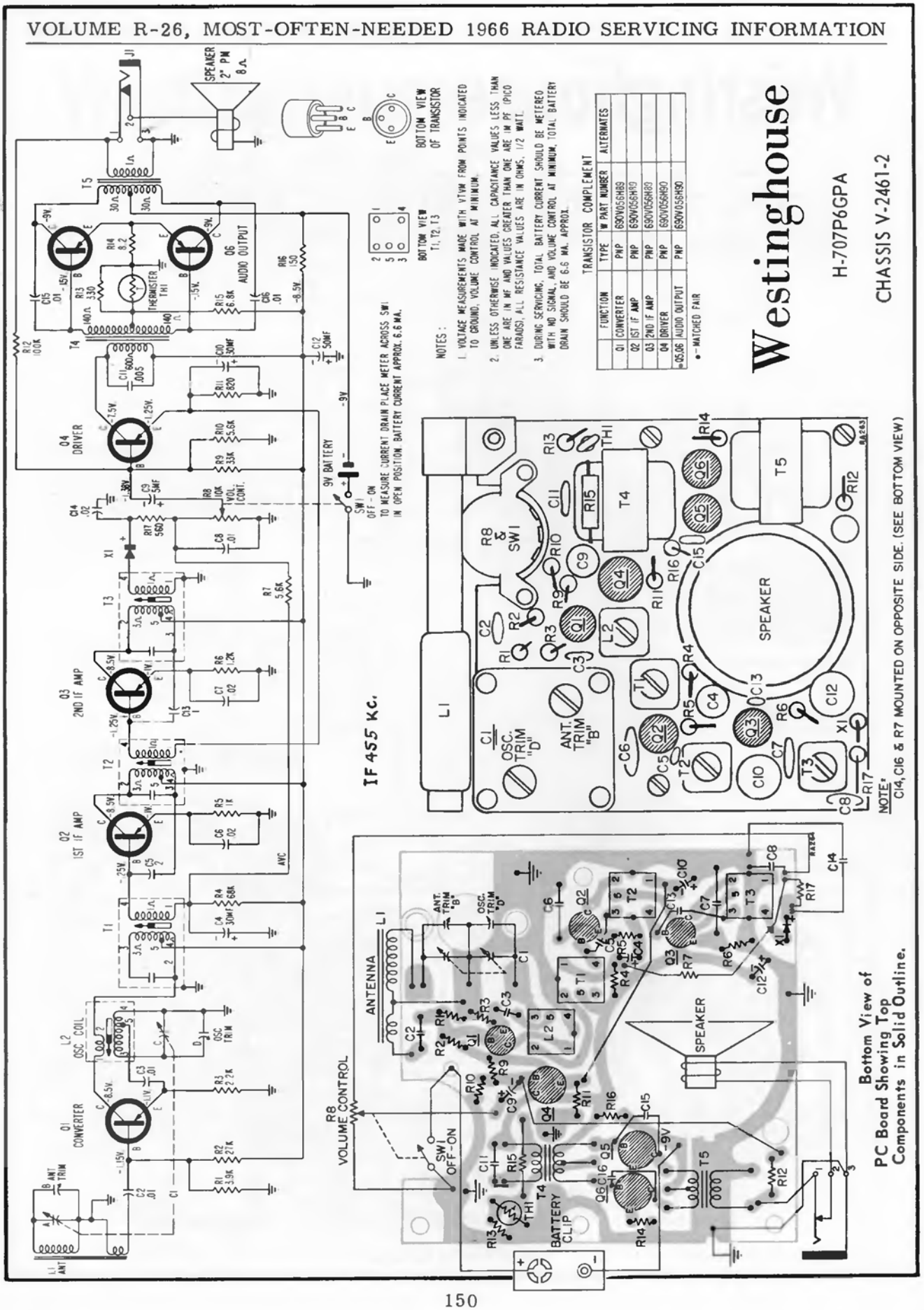
Westinghouse
H-707P6GPA
CHASSIS V-2461-2
TRANSISTOR COMPLEMENT
FUNCTION | TYPE | W PART NUMBER | ALTERNATES
Q1 CONVERTER | PNP | 690V056H88
Q2 1ST IF AMP | PNP | 690V056H89
Q3 2ND IF AMP | PNP | 690V056H89
Q4 DRIVER | PNP | 690V056H90
Q5,Q6 AUDIO OUTPUT | PNP | 690V056H90
• - MATCHED PAIR
NOTES:
1. VOLTAGE MEASUREMENTS MADE WITH VTVM FROM POINTS INDICATED TO GROUND, VOLUME CONTROL AT MINIMUM.
2. UNLESS OTHERWISE INDICATED, ALL CAPACITANCE VALUES LESS THAN ONE ARE IN MF AND VALUES GREATER THAN ONE ARE IN PF (PICO FARADS). ALL RESISTANCE VALUES ARE IN OHMS, 1/2 WATT.
3. DURING SERVICING, TOTAL BATTERY CURRENT SHOULD BE METERED WITH NO SIGNAL, AND VOLUME CONTROL AT MINIMUM. TOTAL BATTERY DRAIN SHOULD BE 6.6 MA. APPROX.
BOTTOM VIEW OF TRANSISTOR
BOTTOM VIEW T1, T2, T3
TO MEASURE CURRENT DRAIN PLACE METER ACROSS SW1 IN OPEN POSITION. BATTERY CURRENT APPROX. 6.6 MA.
SPEAKER 2" PM 8Ω
Q5 AUDIO OUTPUT
Q6 AUDIO OUTPUT
Q4 DRIVER
Q3 2ND IF AMP
Q2 1ST IF AMP
Q1 CONVERTER
IF 455 KC.
9V BATTERY
SW1 OFF-ON
VOL. CONT.
THERMISTER TH1
OSC. TRIM "D"
ANT. TRIM "B"
SPEAKER
NOTE: C14, C16 & R7 MOUNTED ON OPPOSITE SIDE. (SEE BOTTOM VIEW)
ANTENNA
VOLUME CONTROL
BATTERY CLIP
Bottom View of PC Board Showing Top Components in Solid Outline.

# Westinghouse

H-75AC1E (slate gray)
H-75AC2E (metallic mocha)
H-114AC1 (charcoal blue)

CHASSIS V-2538-2

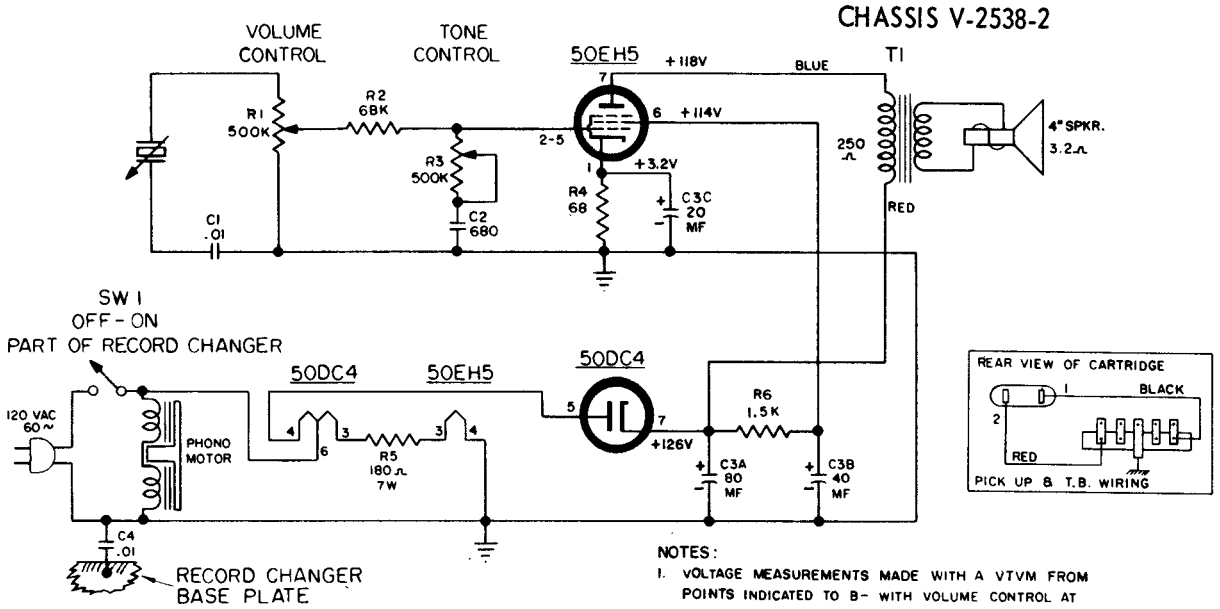


NOTES:

1. VOLTAGE MEASUREMENTS MADE WITH A VTVM FROM POINTS INDICATED TO B- WITH VOLUME CONTROL AT MINIMUM, LINE VOLTAGE AT 120 VAC.
2. UNLESS OTHERWISE INDICATED: ALL CAPACITANCE VALUES LESS THAN ONE ARE IN MICROFARADS AND VALUES GREATER THAN ONE ARE IN PICOFARADS, ALL RESISTANCE ARE IN OHMS 1/2 WATTS.

WESTINGHOUSE

Models H-127ACS1, H-127ACS6

Chassis V-2539-1

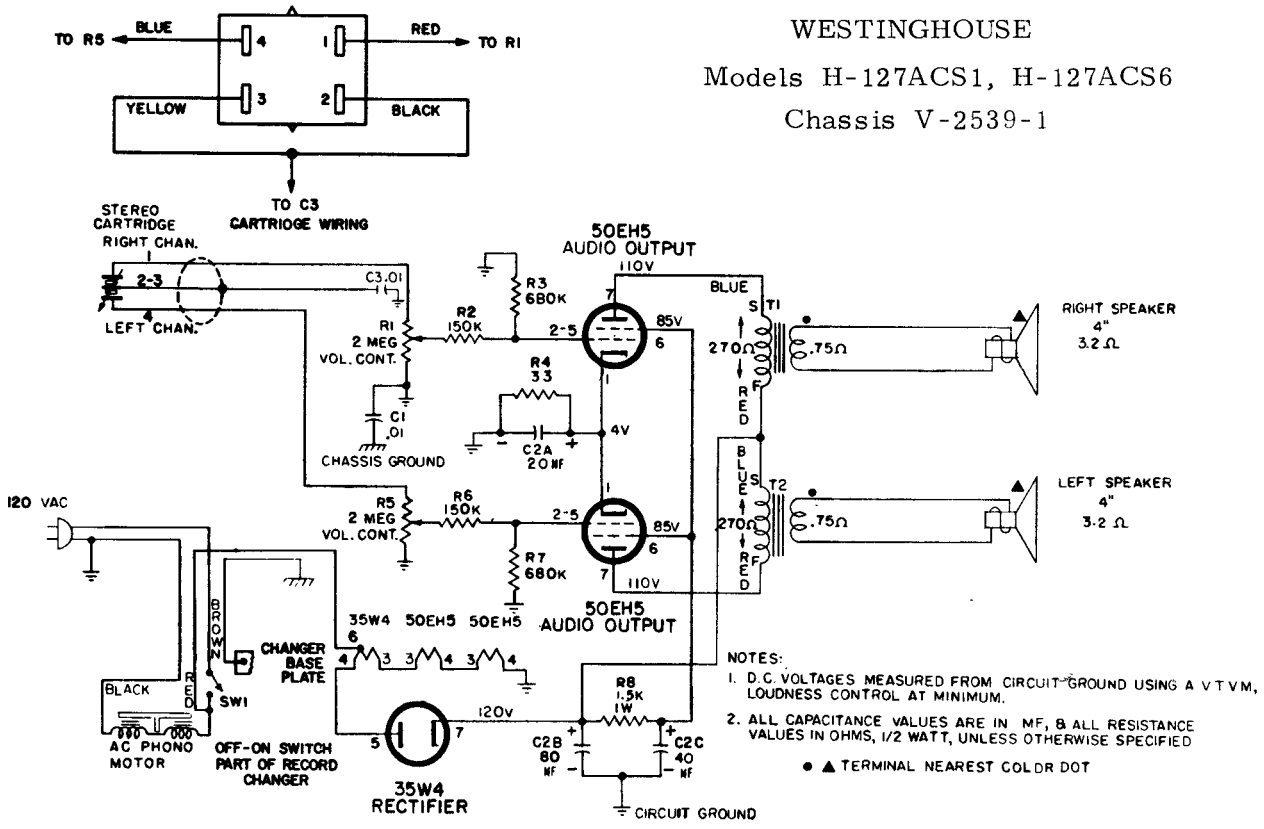


NOTES:

1. D.C. VOLTAGES MEASURED FROM CIRCUIT GROUND USING A VTVM, LOUDNESS CONTROL AT MINIMUM.
2. ALL CAPACITANCE VALUES ARE IN MF, & ALL RESISTANCE VALUES IN OHMS, 1/2 WATT, UNLESS OTHERWISE SPECIFIED

● ▲ TERMINAL NEAREST COLOR DOT

# ZENITH RADIO CORPORATION

# MODELS M860 & M875

## CHASSIS 4LT20Z2 & 4LT21Z2

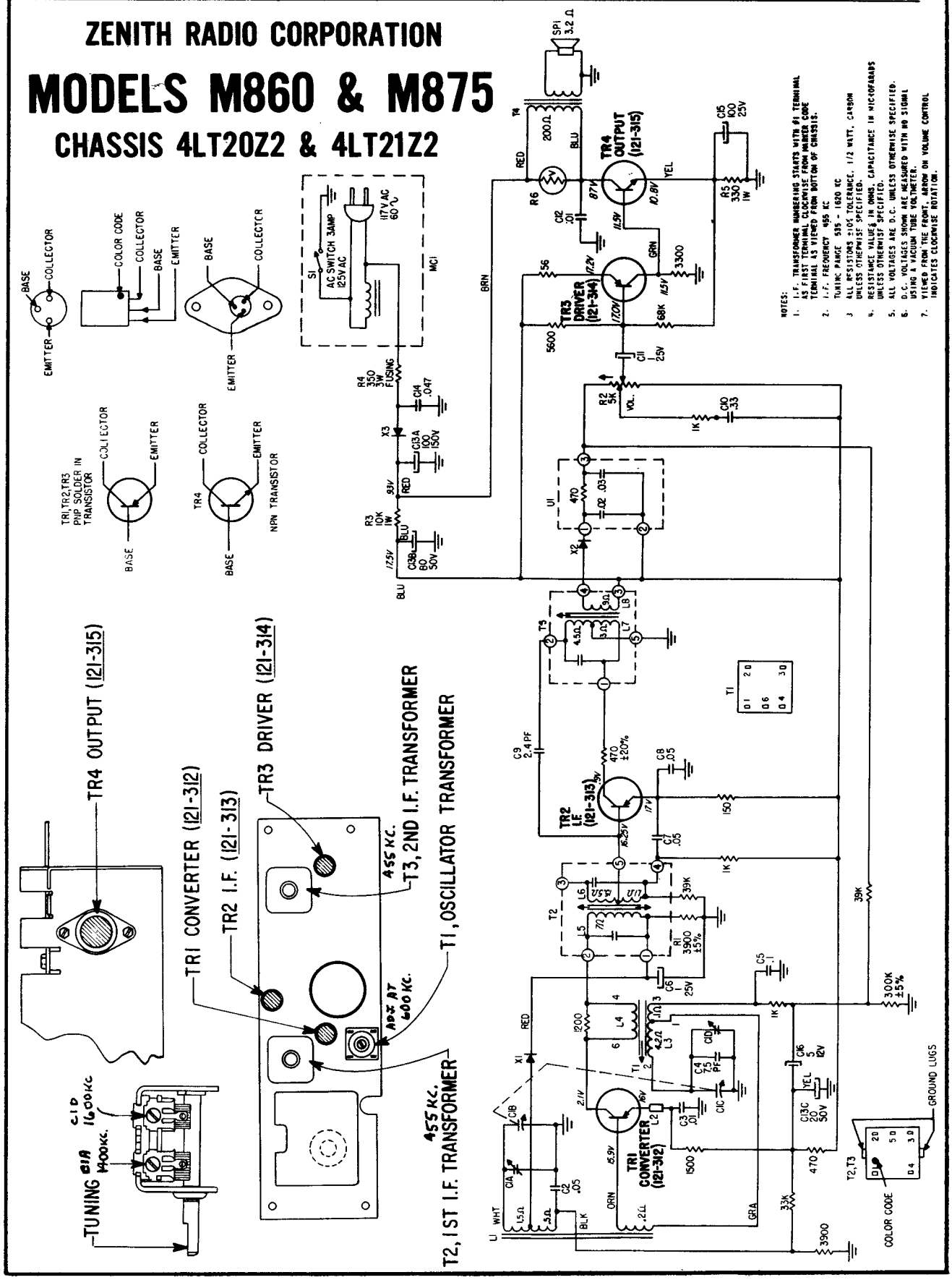

# ZENITH RADIO CORPORATION MODEL T305C, L & W USING CHASSIS 5M02

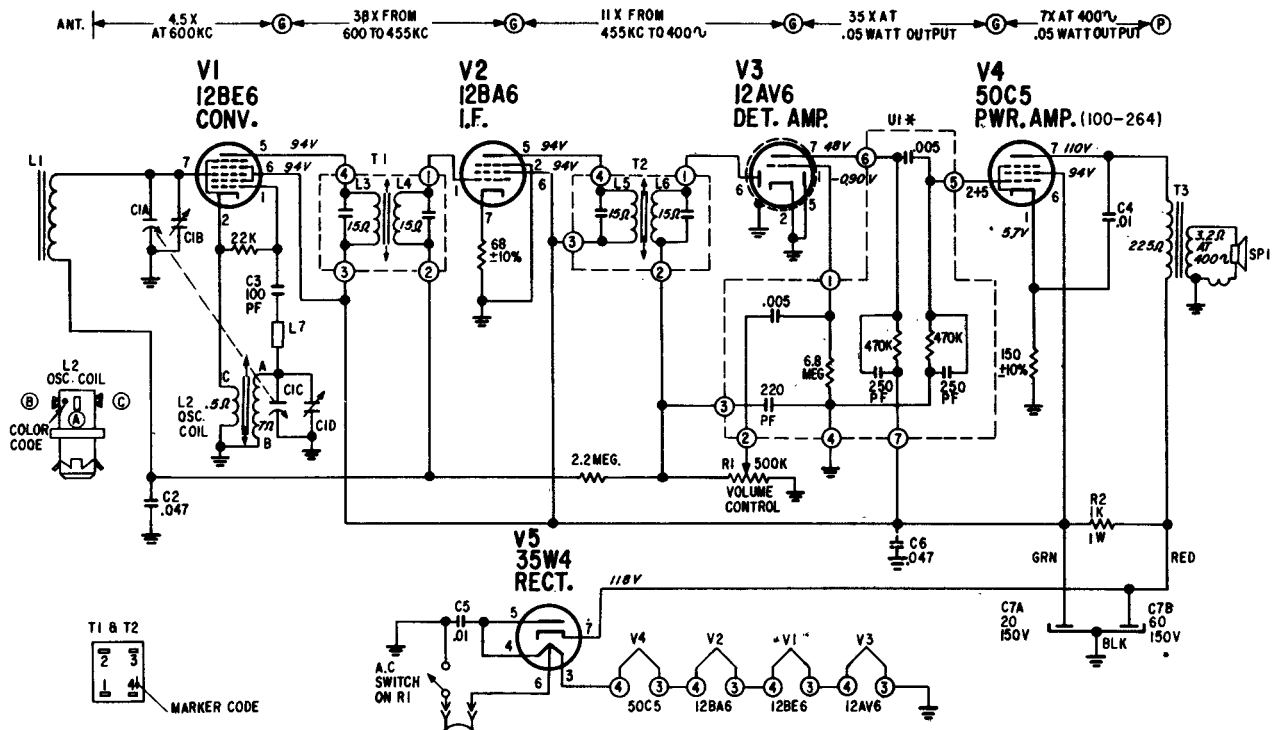


**I.F. TRANSFORMERS:**

The I.F. transformers incorporated in this receiver are of the new permeability tuned type. The advantage of this type is its extreme stability under various humidity and temperature conditions. The upper coil is the secondary and the lower the primary. When adjusting these I.F. transformers, the tuning wrench 68-26 can be inserted into the top slug, rotated until maximum output is obtained and then dropped down to the lower slug and the same operation repeated. The tuning wrench is so designed that turning one slug does not affect the adjustment of the other.

ON U1 SECTION LEADS LINE UP ACCORDING TO THE PART NO AS SHOWN

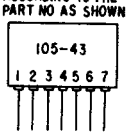


NOTES:

ALL VOLTAGES MEASURED FROM CHASSIS TO POINTS INDICATED WITH A VACUUM TUBE VOLTMETER HAVING 11 MEGOHMS INPUT RESISTANCE.

USE ONLY ZENITH NON-INDUCTIVE ELECTROLYTIC CONDENSERS FOR REPLACEMENT.

IF ANY OTHER TYPE OF ELECTROLYTIC IS USED IT WILL BE NECESSARY TO ADD C6 SHOWN IN DOTTED LINES.

I.F. TRANSFORMER NUMBERING STARTS WITH #1 TERMINAL AS FIRST TERMINAL CLOCKWISE FROM MARKER CODE TERMINAL AS VIEWED FROM BOTTOM OF CHASSIS.

I.F. FREQUENCY 455 KC

TUNING RANGE 535 - 1520 KC

ALL RESISTORS ±20% TOLERANCE, 1/2 WATT, CARBON UNLESS OTHERWISE SPECIFIED.

DENOTES CHASSIS

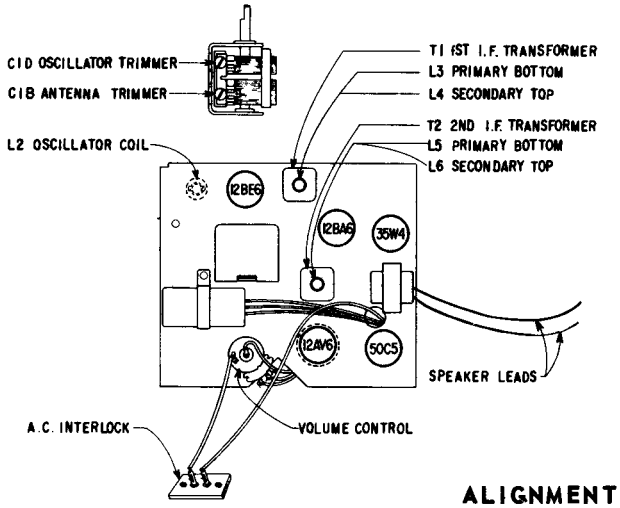


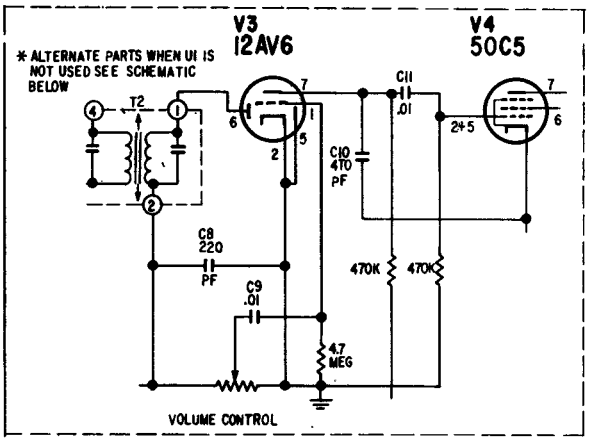


## ALIGNMENT PROCEDURE

| OPERATION | CONNECT OSCILLATOR TO | DUMMY ANTENNA | INPUT SIG. FREQUENCY | SET DIAL AT | TRIMMERS | PURPOSE |
|---|---|---|---|---|---|---|
| 1 | Converter Grid | .5 Mfd. | 455 Kc. | 600 Kc. | L3,L4,L5,L6 | Align I.F. for max. output. |
| 2 | One Turn Loop Coupled Loosely to Wave magnet | – | 1600 Kc. | 1600 Kc. | C1D | Set Osc. to Dial Scale. |
| 3 | | – | 1400 Kc. | 1400 Kc. | C1B | Align Antenna Stage. |

# ZENITH RADIO CORPORATION

## MODELS M507B,C,W AND M511C,W,V USING CHASSIS 5M03

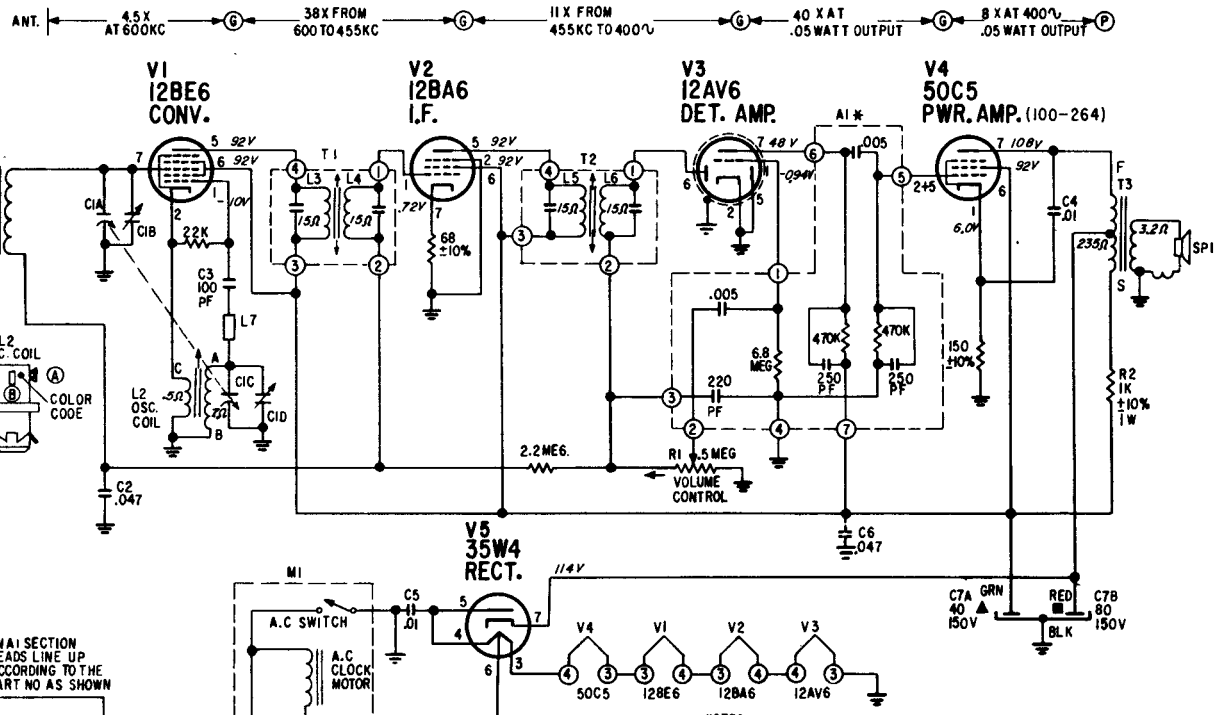


NOTES:

ALL VOLTAGES MEASURED FROM CHASSIS TO POINTS INDICATED WITH AN A.C., D.C. OR VACUUM TUBE VOLTMETER.

USE ONLY ZENITH NON-INDUCTIVE ELECTROLYTIC CONDENSERS FOR REPLACEMENT.

IF ANY OTHER TYPE OF ELECTROLYTIC IS USED IT WILL BE NECESSARY TO ADD C6 SHOWN IN DOTTED LINES.

I.F. TRANSFORMER NUMBERING STARTS WITH #1 TERMINAL AS FIRST TERMINAL CLOCKWISE FROM MARKER CODE TERMINAL AS VIEWED FROM BOTTOM OF CHASSIS.

I.F. FREQUENCY 455 KC

TUNING RANGE 535 - 1820 KC

ALL RESISTORS ±20% TOLERANCE, 1/2-WATT, CARBON UNLESS OTHERWISE SPECIFIED.

DENOTES CHASSIS

* ALTERNATE PARTS WHEN A1 IS NOT USED SEE SCHEMATIC BELOW

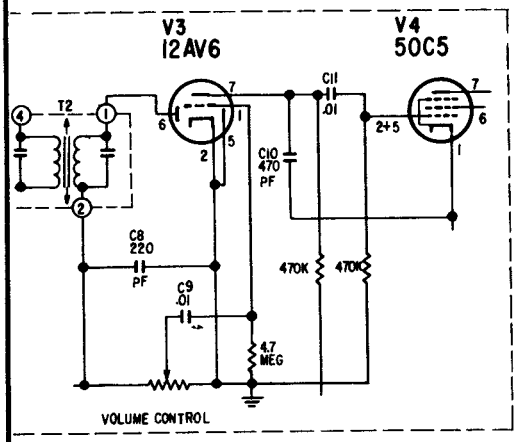


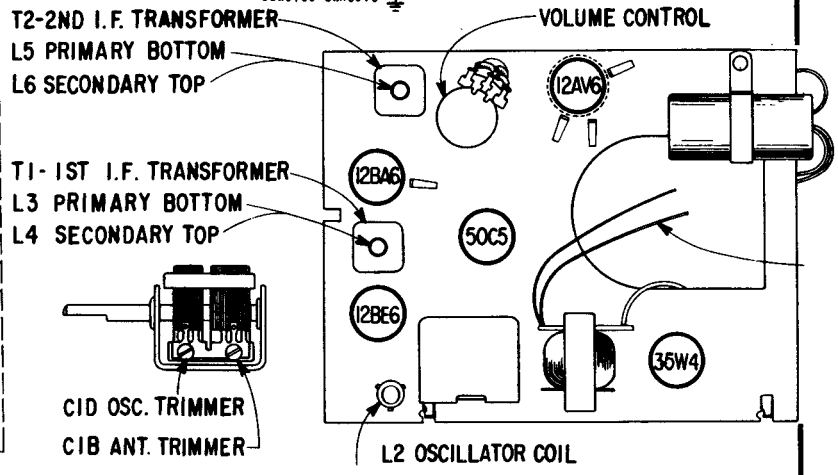


### ALIGNMENT PROCEDURE

| OPERATION | CONNECT OSCILLATOR TO | DUMMY ANTENNA | INPUT SIG. FREQUENCY | SET DIAL AT | TRIMMERS | PURPOSE |
|---|---|---|---|---|---|---|
| 1 | Converter Grid | .5 Mfd. | 455 Kc. | 600 Kc. | L3,L4,L5,L6 | Align I.F. for max. output. |
| 2 | One Turn Loop Coupled Loosely to Wave magnet | - | 1600 Kc. | 1600 Kc. | C1D | Set Osc. to Dial Scale. |
| 3 | | - | 1400 Kc. | 1400 Kc. | C1B | Align Antenna Stage. |

# ZENITH RADIO CORPORATION MODELS T315B, W & P CHASSIS 5M06

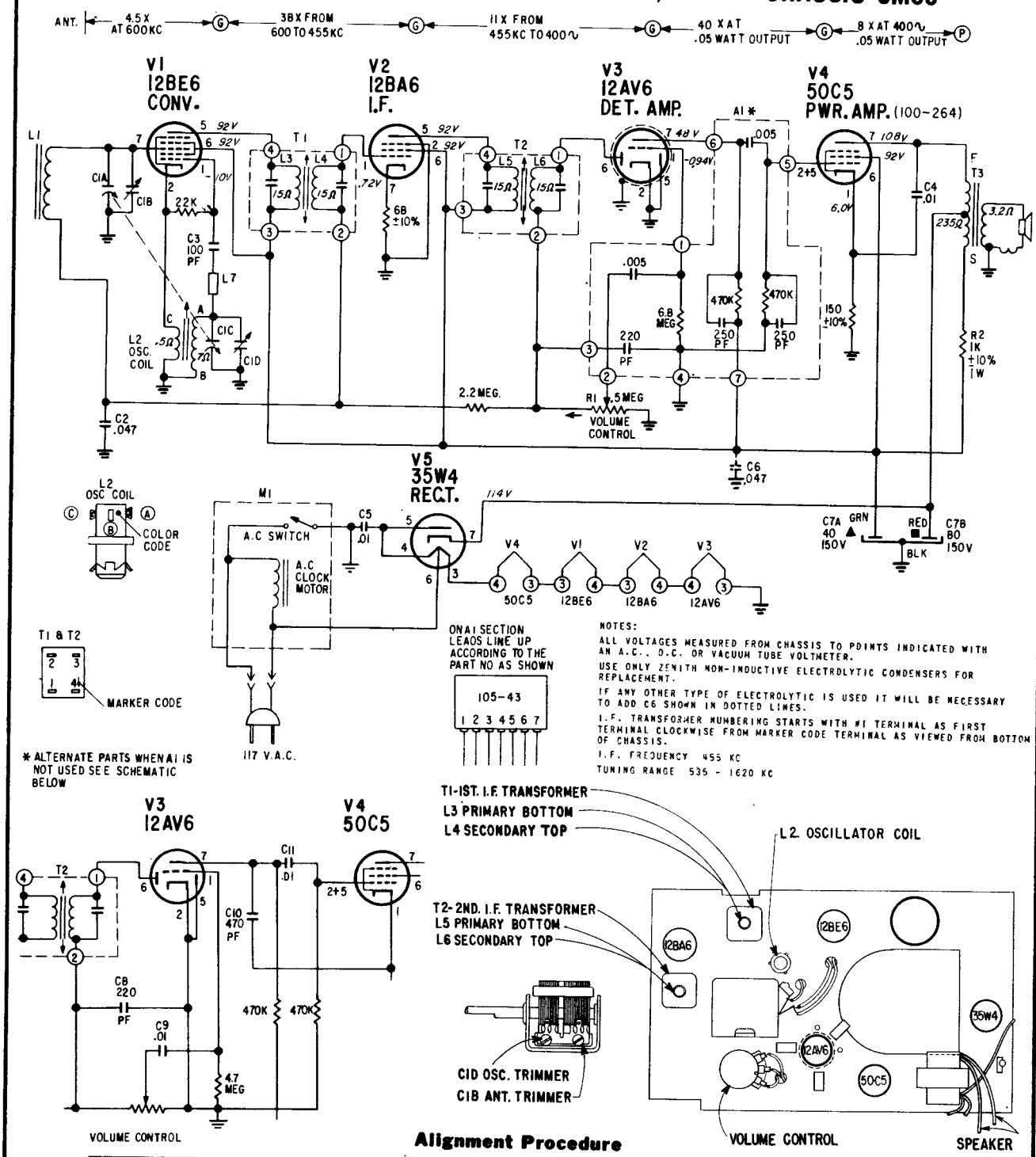


## Alignment Procedure

| OPERATION | CONNECT OSCILLATOR TO | DUMMY ANTENNA | INPUT SIG. FREQUENCY | SET DIAL AT | TRIMMERS | PURPOSE |
|---|---|---|---|---|---|---|
| 1 | Converter Grid | .5 Mfd. | 455 Kc. | 600 Kc. | L3, 4, 5, 6 | For I.F. Alignment. |
| 2 | One Turn Loop Coupled Loosely to Wave Magnet | — | 1600 Kc. | 1600 Kc. | CID | Set Oscillator to Dial Scale |
| 3 | | — | 1400 Kc. | 1400 Kc. | CIB | Align Antenna Stage |

# ZENITH RADIO MODELS M504C, L & W USING CHASSIS 5M04, MODELS M506C, P & W USING CHASSIS 5M02 AND MODELS M508B, C, L & W USING CHASSIS 5M05

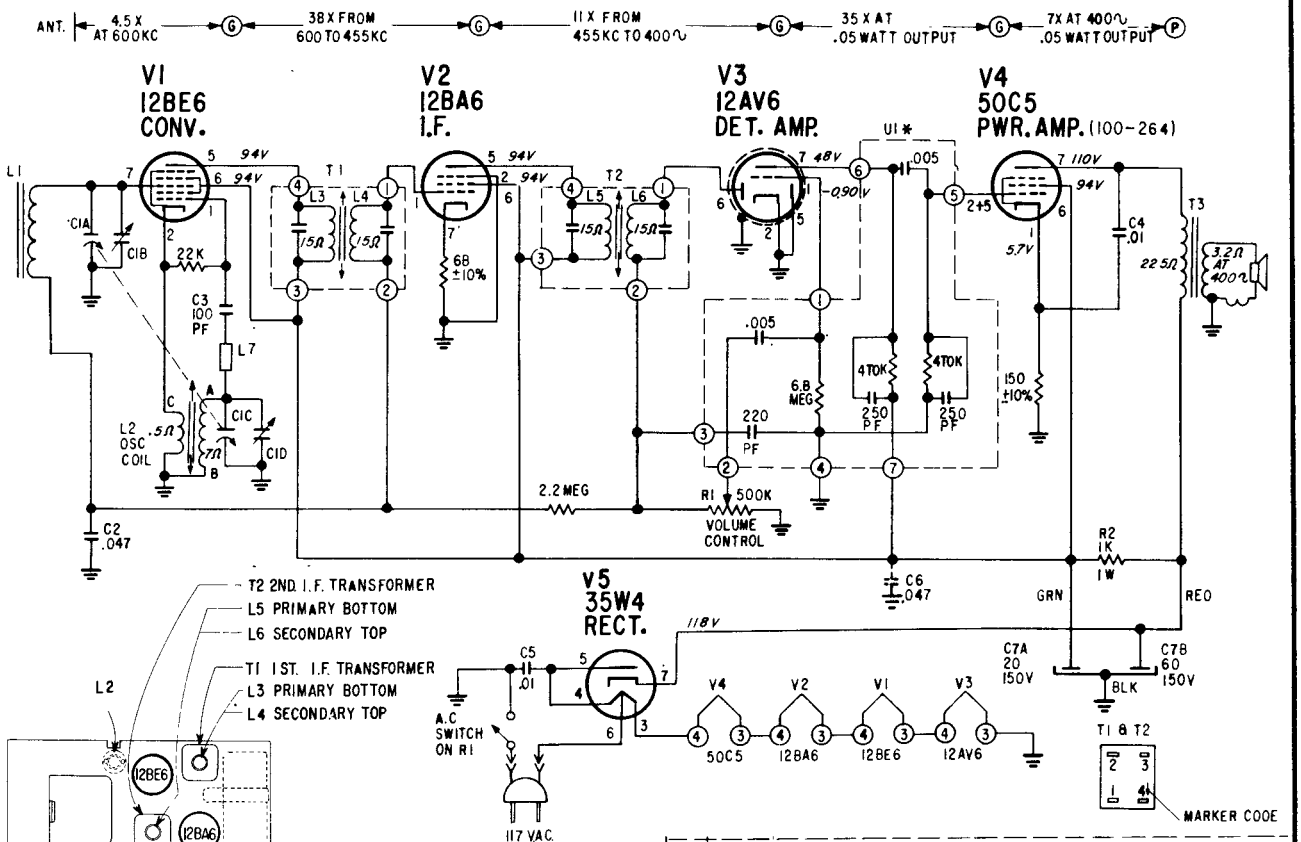


*TUBE & TRIMMER LAYOUT CHASSIS 5M04*

NOTES:

ALL VOLTAGES MEASURED FROM CHASSIS TO POINTS INDICATED WITH A VACUUM TUBE VOLTMETER HAVING 11 MEGOHMS INPUT RESISTANCE.

USE ONLY ZENITH NON-INDUCTIVE ELECTROLYTIC CONDENSERS FOR REPLACEMENT.

IF ANY OTHER TYPE OF ELECTROLYTIC IS USED IT WILL BE NECESSARY TO ADD C6 SHOWN IN DOTTED LINES.

I.F. TRANSFORMER NUMBERING STARTS WITH #1 TERMINAL AS FIRST TERMINAL CLOCKWISE FROM MARKER CODE TERMINAL AS VIEWED FROM BOTTOM OF CHASSIS.

I.F. FREQUENCY 455 KC

TUNING RANGE 535 - 1620 KC

ALL RESISTORS ±20% TOLERANCE. 1/2 WATT, CARBON UNLESS OTHERWISE SPECIFIED.

DENOTES CHASSIS

## ALIGNMENT PROCEDURE

ON U1 SECTION LEADS LINE UP ACCORDING TO THE PART NO AS SHOWN

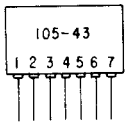


| OPER. | CONNECT OSCILLATOR TO | DUMMY ANT. | INPUT SIG. FREQUENCY | SET DIAL AT | TRIMMERS | PURPOSE |
|---|---|---|---|---|---|---|
| 1 | Converter Grid | .5 Mfd. | 455 Kc. | 600 Kc. | L3,L4,L5,L6 | Align I.F. for max. output. |
| 2 | One Turn Loop | – | 1600 Kc. | 1600 Kc. | C1D | Set Osc. to Dial Scale. |
| 3 | Coupled Loosely to Wave magnet | – | 1400 Kc. | 1400 Kc. | C1B | Align Antenna Stage |

# ZENITH RADIO CORPORATION

# MODELS M512B, C & W CHASSIS 5M13

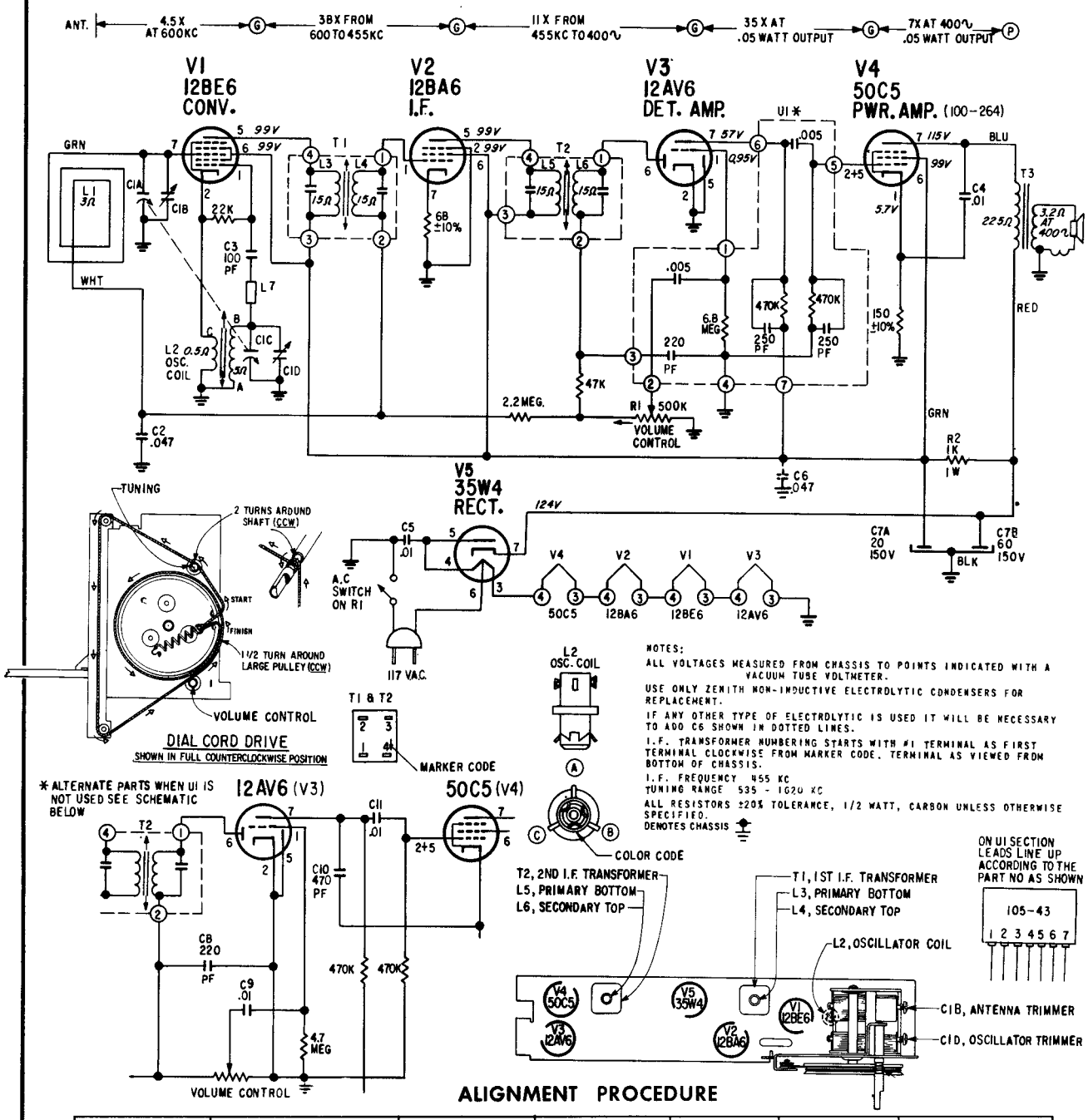


## ALIGNMENT PROCEDURE

| OPERATION | CONNECT OSCILLATOR TO | DUMMY ANTENNA | INPUT SIG. FREQUENCY | SET DIAL AT | TRIMMERS | PURPOSE |
|---|---|---|---|---|---|---|
| 1 | Converter Grid | .5 Mfd. | 455 Kc. | 600 Kc. | L3,4,5,6 | For I.F. Alignment. |
| 2 | One Turn Loop Coupled Loosely to Wave Magnet | —— | 1600 Kc. | 1600 Kc. | CID | Set Oscillator to Dial Scale |
| 3 | | —— | 1400 Kc. | 1400 Kc. | CIB | Align Antenna Stage |

# ZENITH RADIO MODELS N511C,L,W-N513B,J,W-N514C,G,L USING CHASSIS 5N02

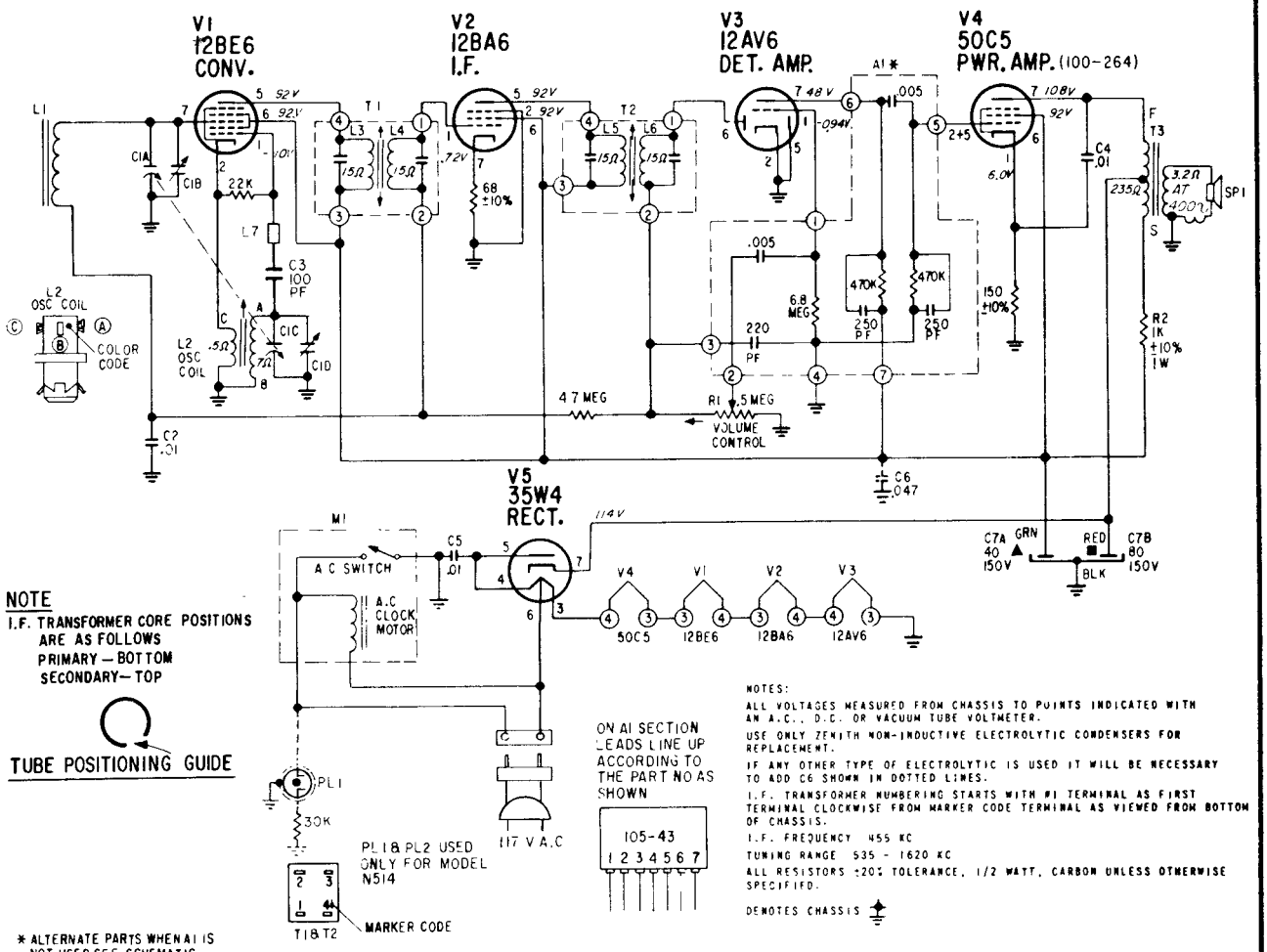


NOTE
I.F. TRANSFORMER CORE POSITIONS ARE AS FOLLOWS
PRIMARY — BOTTOM
SECONDARY — TOP

TUBE POSITIONING GUIDE

NOTES:
ALL VOLTAGES MEASURED FROM CHASSIS TO POINTS INDICATED WITH AN A.C., D.C. OR VACUUM TUBE VOLTMETER.
USE ONLY ZENITH NON-INDUCTIVE ELECTROLYTIC CONDENSERS FOR REPLACEMENT.
IF ANY OTHER TYPE OF ELECTROLYTIC IS USED IT WILL BE NECESSARY TO ADD C6 SHOWN IN DOTTED LINES.
I.F. TRANSFORMER NUMBERING STARTS WITH #1 TERMINAL AS FIRST TERMINAL CLOCKWISE FROM MARKER CODE TERMINAL AS VIEWED FROM BOTTOM OF CHASSIS.
I.F. FREQUENCY 455 KC
TUNING RANGE 535 - 1620 KC
ALL RESISTORS ±20% TOLERANCE, 1/2 WATT, CARBON UNLESS OTHERWISE SPECIFIED.
DENOTES CHASSIS

* ALTERNATE PARTS WHEN A1 IS NOT USED SEE SCHEMATIC BELOW

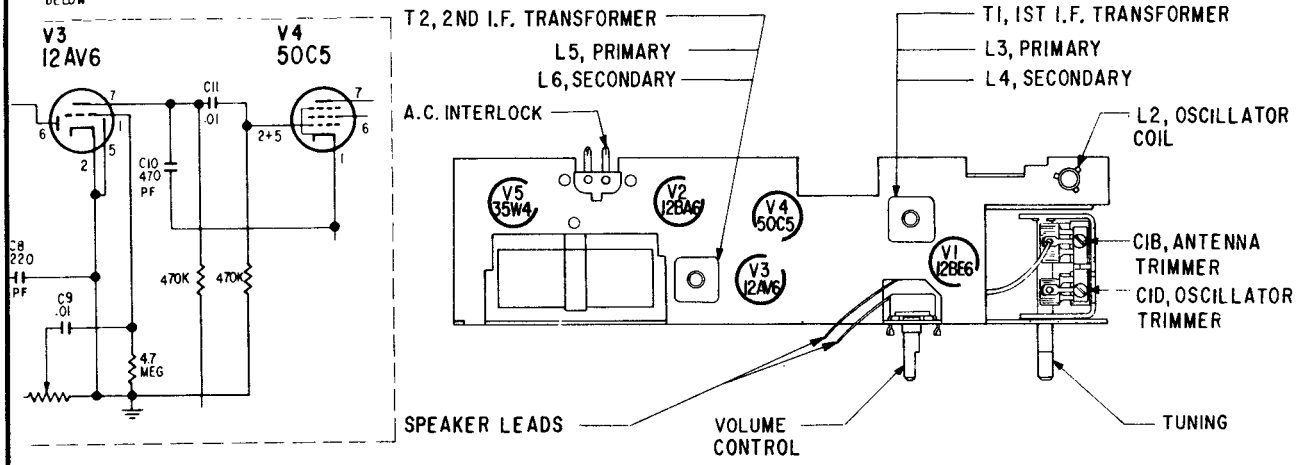


## ALIGNMENT PROCEDURE

| OPERATION | CONNECT OSCILLATOR TO | DUMMY ANTENNA | INPUT SIG. FREQUENCY | SET DIAL AT | TRIMMERS | PURPOSE |
|---|---|---|---|---|---|---|
| 1 | Converter Grid | 5 Mfd. | 455 Kc. | 600 Kc. | L3,L4,L5,L6 | Align I.F. for max. output. |
| 2 | One Turn Loop Coupled Loosely to Wave magnet | — | 1600 Kc. | 1600 Kc. | C1D | Set Osc. to Dial Scale. |
| 3 | | — | 1400 Kc. | 1400 Kc. | C1B | Align Antenna Stage. |

# ZENITH RADIO CORPORATION

## MODELS N506C, L & W – N508B, L & W USING CHASSIS 5N03

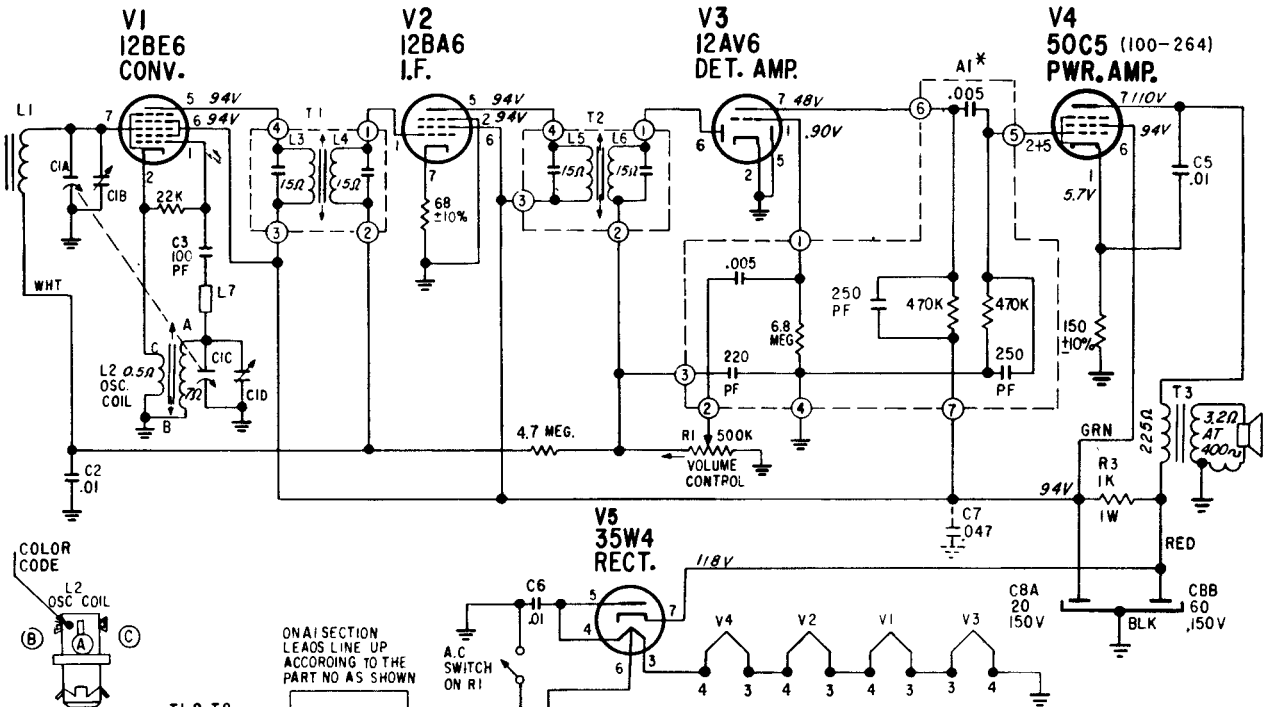


NOTES:
ALL VOLTAGES MEASURED FROM CHASSIS TO POINTS INDICATED WITH A VACUUM TUBE VOLTMETER.
USE ONLY ZENITH NON-INDUCTIVE ELECTROLYTIC CONDENSERS FOR REPLACEMENT.
IF ANY OTHER TYPE OF ELECTROLYTIC IS USED IT WILL BE NECESSARY TO ADD C7 SHOWN IN DOTTED LINES.
I.F. TRANSFORMER NUMBERING STARTS WITH #1 TERMINAL AS FIRST TERMINAL CLOCKWISE FROM MARKER CODE, TERMINAL AS VIEWED FROM BOTTOM OF CHASSIS.
I.F. FREQUENCY 455 KC
TUNING RANGE 535 - 1620 KC

* ALTERNATE PARTS WHEN A1 IS NOT USED SEE SCHEMATIC BELOW

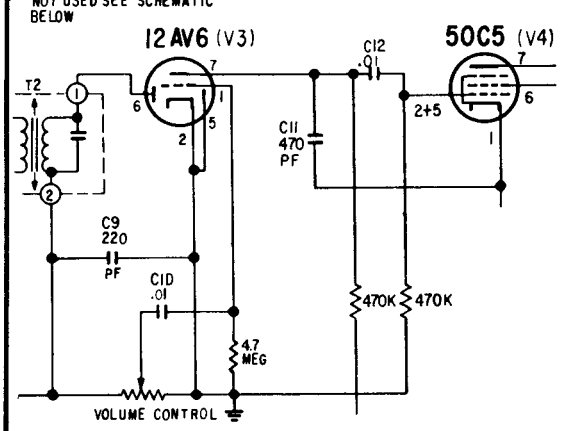


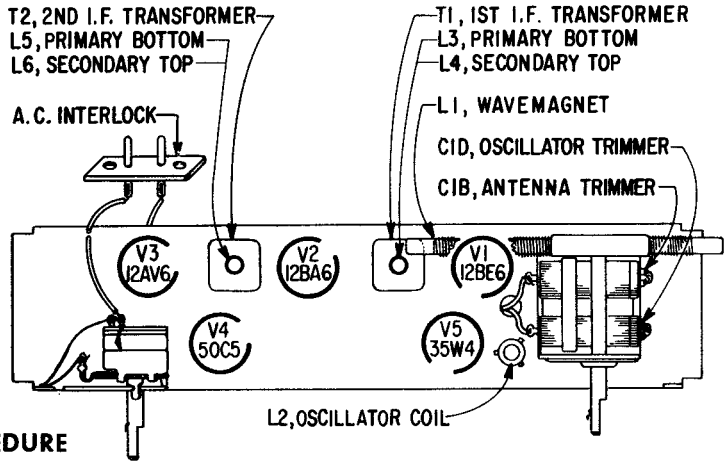


## ALIGNMENT PROCEDURE

| OPERATION | CONNECT OSCILLATOR TO | DUMMY ANTENNA | INPUT SIG. FREQUENCY | SET DIAL AT | TRIMMERS | PURPOSE |
|---|---|---|---|---|---|---|
| 1 | Converter Grid | .5 Mfd. | 455 Kc. | 600 Kc. | L3,4,5,6 | For I.F. Alignment. |
| 2 | One Turn Loop Coupled Loosely to Weve Magnet | —— | 1600 Kc. | 1600 Kc. | CID | Set Oscillator to Diel Scele |
| 3 | | —— | 1400 Kc. | 1400 Kc. | CIB | Align Antenne Stege |

# ZENITH RADIO CORPORATION

## MODELS N516J, L & W USING CHASSIS 5N09 AND MODELS N519C, J, L, & W USING CHASSIS 5N07

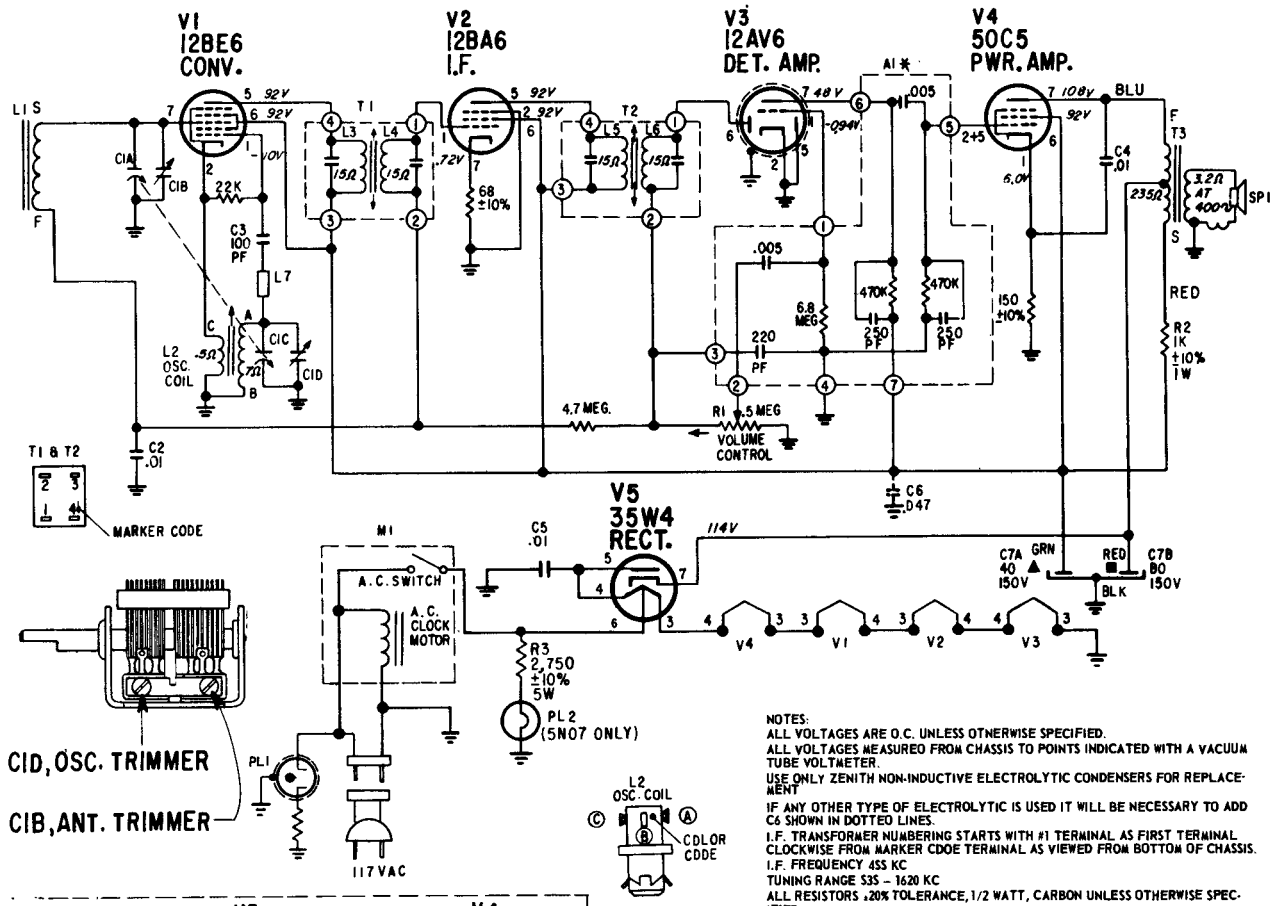


NOTES:
ALL VOLTAGES ARE D.C. UNLESS OTHERWISE SPECIFIED.
ALL VOLTAGES MEASURED FROM CHASSIS TO POINTS INDICATED WITH A VACUUM TUBE VOLTMETER.
USE ONLY ZENITH NON-INDUCTIVE ELECTROLYTIC CONDENSERS FOR REPLACEMENT
IF ANY OTHER TYPE OF ELECTROLYTIC IS USED IT WILL BE NECESSARY TO ADD C6 SHOWN IN DOTTED LINES.
I.F. TRANSFORMER NUMBERING STARTS WITH #1 TERMINAL AS FIRST TERMINAL CLOCKWISE FROM MARKER CODE TERMINAL AS VIEWED FROM BOTTOM OF CHASSIS.
I.F. FREQUENCY 455 KC
TUNING RANGE 535 – 1620 KC
ALL RESISTORS ±20% TOLERANCE, 1/2 WATT, CARBON UNLESS OTHERWISE SPECIFIED.
ALL CAPACITOR VALUE IN MICROFARADS UNLESS OTHERWISE SPECIFIED.
DENOTES CHASSIS ⏚

### ALIGNMENT PROCEDURE

| OPERATION | CONNECT OSCILLATOR TO | DUMMY ANTENNA | INPUT SIG. FREQUENCY | SET DIAL AT | TRIMMERS | PURPOSE |
|---|---|---|---|---|---|---|
| 1 | Converter Grid | .5 Mfd. | 455 Kc. | 600 Kc. | L3,L4,L5,L6 | Align I.F. for max. output. |
| 2 | One Turn Loop Coupled Loosely to Wave magnet | - | 1600 Kc. | 1600 Kc. | CID | Set Osc. to Dial Scale. |
| 3 | | - | 1400 Kc. | 1400 Kc. | CIB | Align Antenna Stage. |

# ZENITH RADIO CORPORATION

## MODELS N509C, F & W CHASSIS 5N13 AND N512A, H & J CHASSIS 5N12

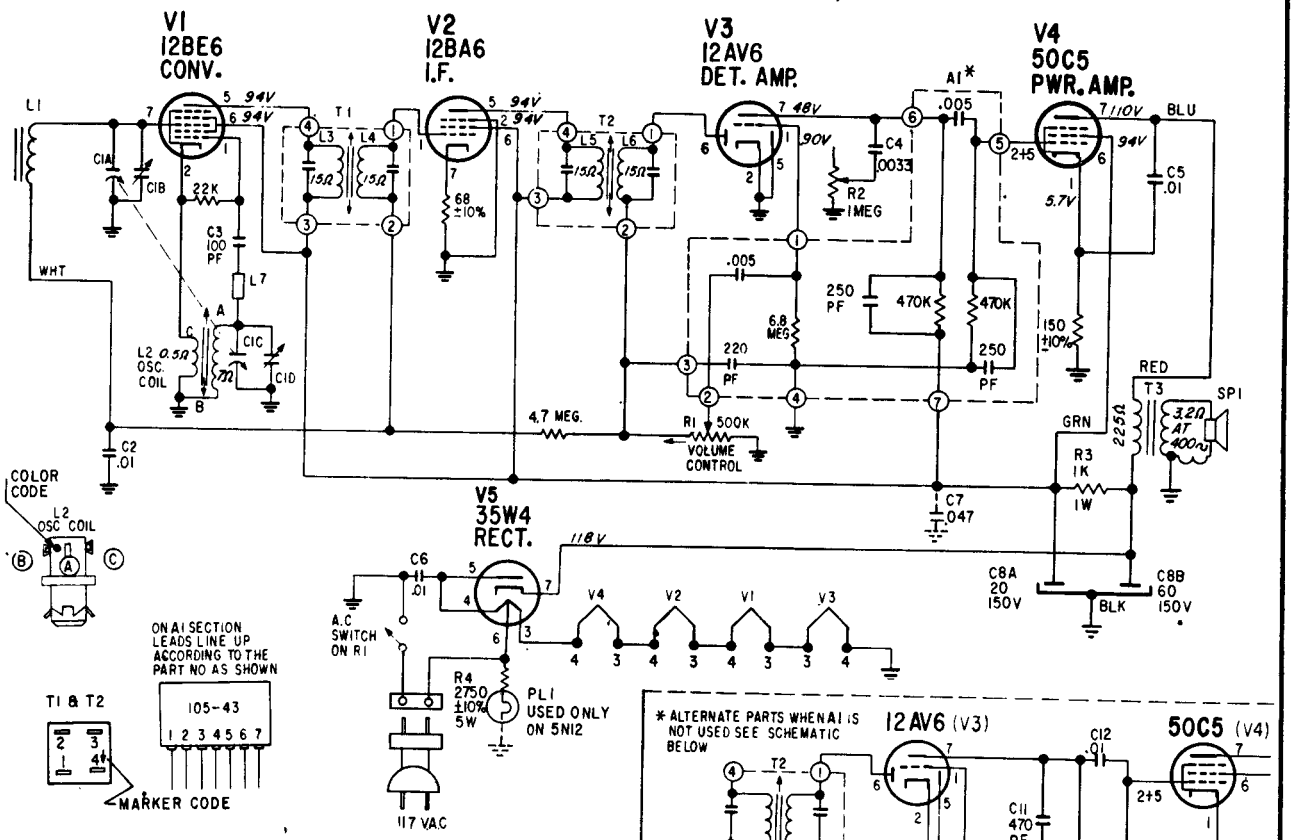


NOTES:
ALL VOLTAGES MEASURED FROM CHASSIS TO POINTS INDICATED WITH AM VACUUM TUBE VOLTMETER.
USE ONLY ZENITH NON-INDUCTIVE ELECTROLYTIC CONDENSERS FOR REPLACEMENT.
IF ANY OTHER TYPE OF ELECTROLYTIC IS USED IT WILL BE NECESSARY TO ADD C7 SHOWN IN DOTTED LINES.
I.F. TRANSFORMER NUMBERING STARTS WITH #1 TERMINAL AS FIRST TERMINAL CLOCKWISE FROM MARKER CODE, TERMINAL AS VIEWED FROM BOTTOM OF CHASSIS.
I.F. FREQUENCY 455 KC
TUNING RANGE 535 – 1620 KC
ALL RESISTORS ±20% TOLERANCE, 1/2 WATT, CARBON UNLESS OTHERWISE SPECIFIED.
DENOTES CHASSIS

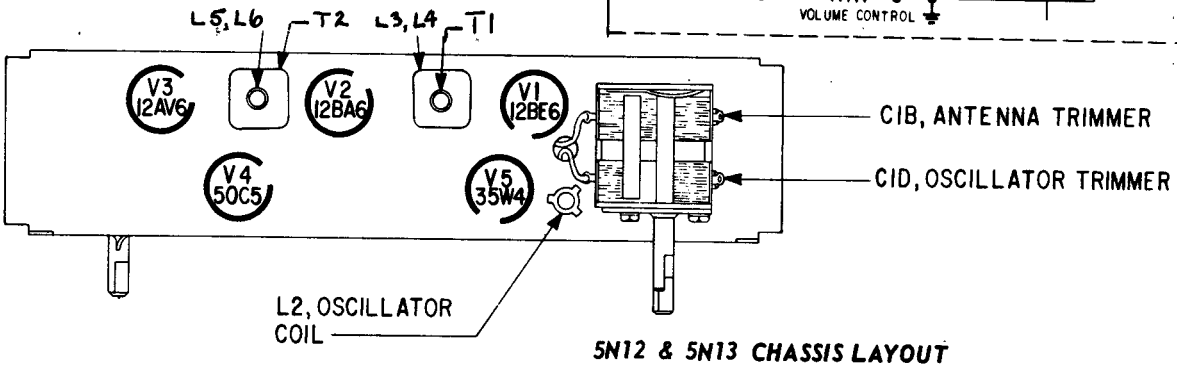


*5N12 & 5N13 CHASSIS LAYOUT*

### ALIGNMENT PROCEDURE

| OPERATION | CONNECT OSCILLATOR TO | DUMMY ANTENNA | INPUT SIG. FREQUENCY | SET DIAL AT | TRIMMERS | PURPOSE |
|---|---|---|---|---|---|---|
| 1 | Converter Grid | .5 Mfd. | 455 Kc. | 600 Kc. | L3,L4,L5,L6 | Align I.F. for max. output. |
| 2 | One Turn Loop Coupled Loosely to Wave magnet | - | 1600 Kc. | 1600 Kc. | C1D | Set Osc. to Dial Scale. |
| 3 | | - | 1400 Kc. | 1400 Kc. | C1B | Align Antenna Stage. |

# ZENITH RADIO CORPORATION MODELS N624A, H & J CHASSIS 6N03

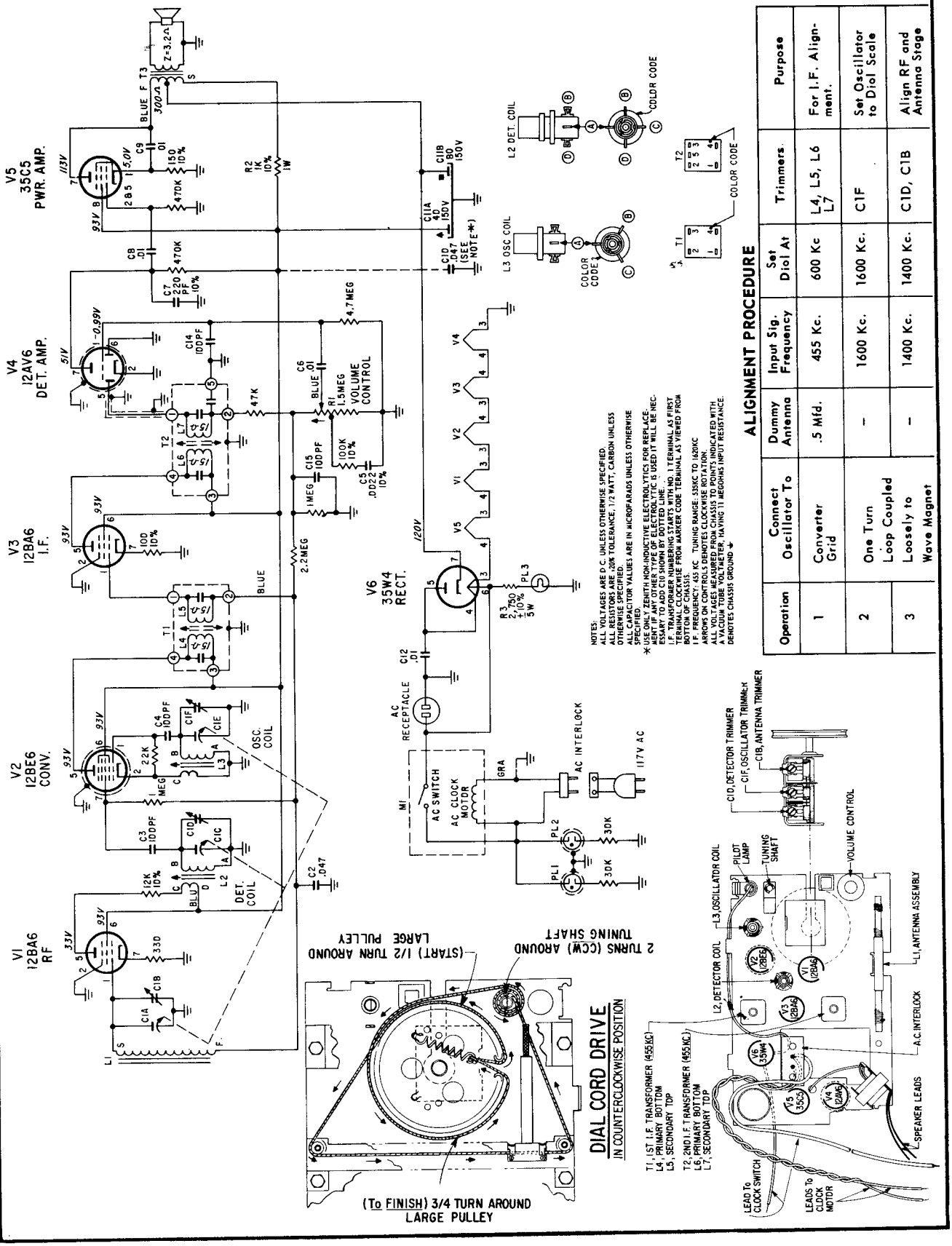


NOTES:
ALL VOLTAGES ARE D.C. UNLESS OTHERWISE SPECIFIED.
ALL RESISTORS ARE 20% TOLERANCE, 1/2 WATT, CARBON UNLESS OTHERWISE SPECIFIED.
ALL CAPACITOR VALUES ARE IN MICROFARADS UNLESS OTHERWISE SPECIFIED.
* USE ONLY ZENITH NON-INDUCTIVE ELECTROLYTICS FOR REPLACEMENT. IF ANY OTHER TYPE OF ELECTROLYTIC IS USED IT WILL BE NECESSARY TO ADD C10 SHOWN BY DOTTED LINE.
TRANSFORMER NUMBERS STARTING WITH NO. 1 TERMINAL AS FIRST TERMINAL CLOCKWISE FROM MARKER CODE TERMINAL AS VIEWED FROM BOTTOM OF CHASSIS.
I.F. FREQUENCY: 455 KC. TUNING RANGE: 535KC TO 1620KC
ARROWS ON CONTROLS DENOTES CLOCKWISE ROTATION.
ALL VOLTAGES MEASURED FROM CHASSIS TO POINTS INDICATED WITH A VACUUM TUBE VOLTMETER, HAVING 11 MEGOHMS INPUT RESISTANCE.
DENOTES CHASSIS GROUND ⏚

## ALIGNMENT PROCEDURE

| Operation | Connect Oscillator To | Dummy Antenna | Input Sig. Frequency | Set Dial At | Trimmers | Purpose |
|---|---|---|---|---|---|---|
| 1 | Converter Grid | .5 Mfd. | 455 Kc. | 600 Kc | L4, L5, L6 L7 | For I.F. Alignment. |
| 2 | One Turn Loop Coupled Loosely to Wave Magnet | - | 1600 Kc. | 1600 Kc. | C1F | Set Oscillator to Dial Scale |
| 3 | | - | 1400 Kc. | 1400 Kc. | C1D, C1B | Align RF and Antenna Stage |

# ZENITH RADIO CORPORATION MODELS N615C, L & W CHASSIS 6N05

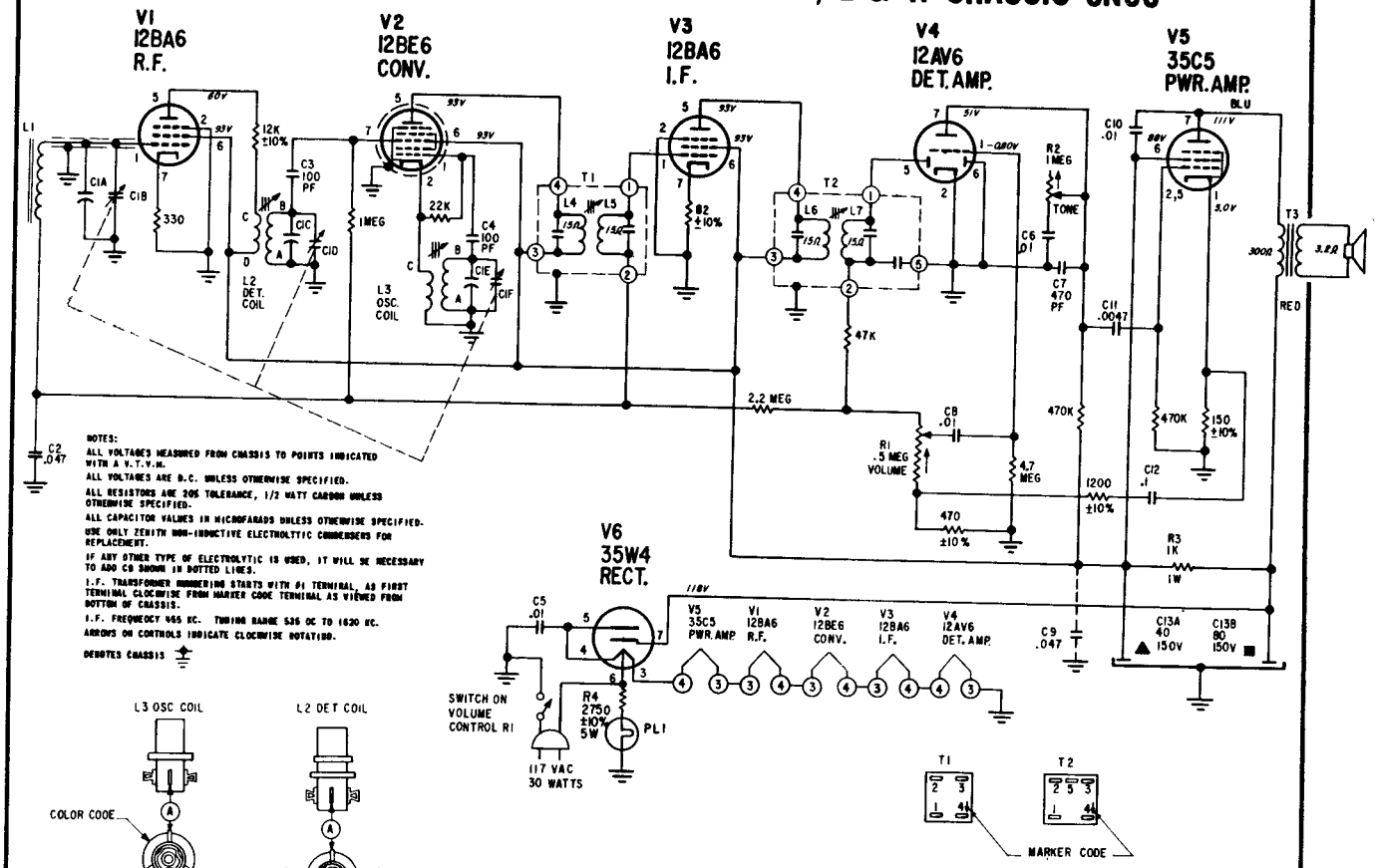


## ALIGNMENT PROCEDURE

| Operation | Connect Oscillator To | Dummy Antenna | Input Sig. Frequency | Set Dial At | Trimmers | Purpose |
|---|---|---|---|---|---|---|
| 1 | Converter Grid | .5 Mfd. | 455 Kc. | 600 Kc | L4, L5, L6, L7 | For I.F. Alignment. |
| 2 | One Turn Loop Coupled | — | 1600 Kc. | 1600 Kc. | C1F | Set Oscillator to Dial Scale |
| 3 | Loosely to Wave Magnet | — | 1400 Kc. | 1400 Kc. | C1D, C1B | Align Detector and Antenna Stage |

## ZENITH RADIO CORPORATION
## MODEL M729A CHASSIS 7M03

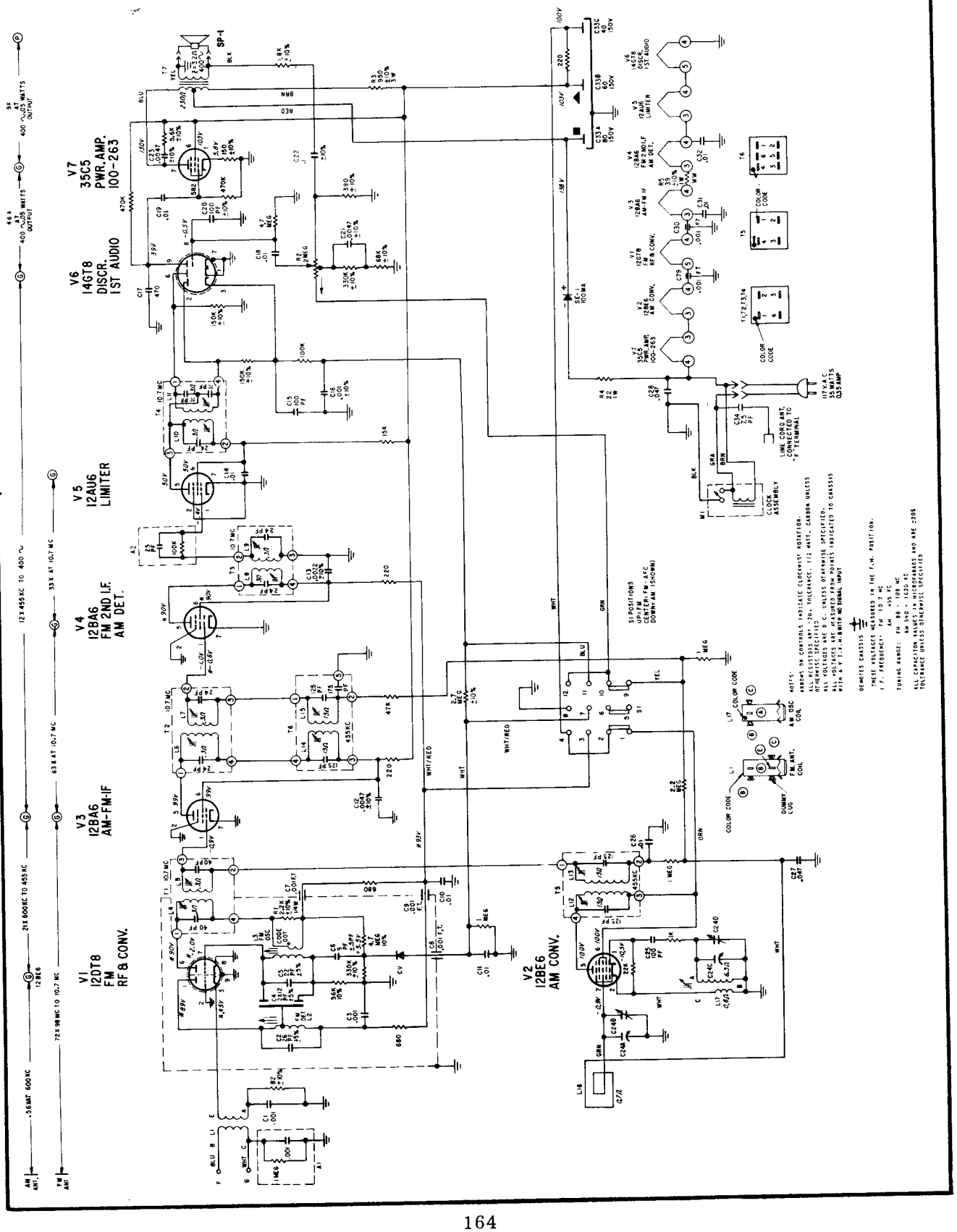

## ZENITH RADIO Model M730W, Chassis 7M04

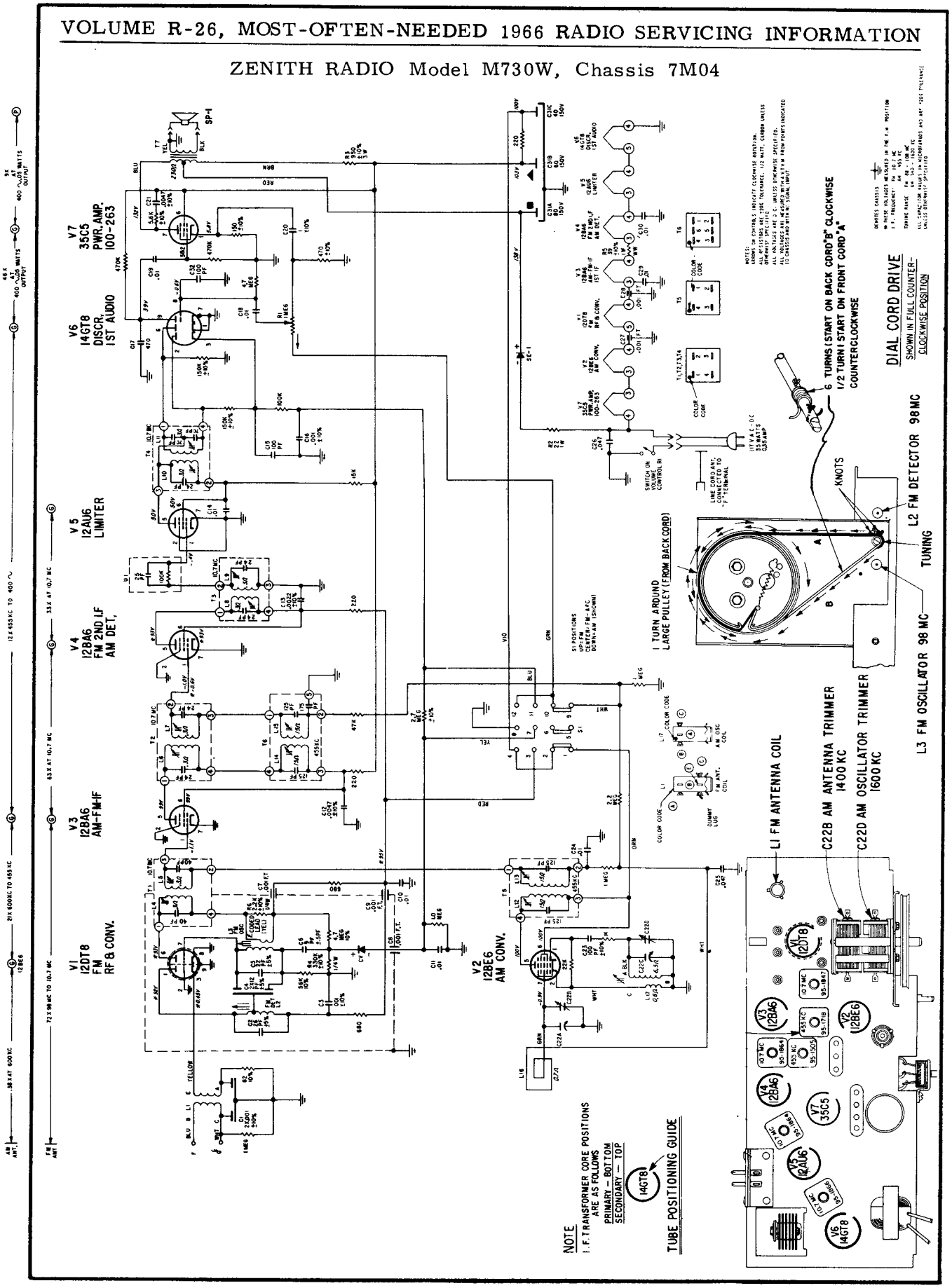

# MODEL ROYAL 710M ALL TRANSISTOR PORTABLE RADIO CHASSIS 7MT44Z2

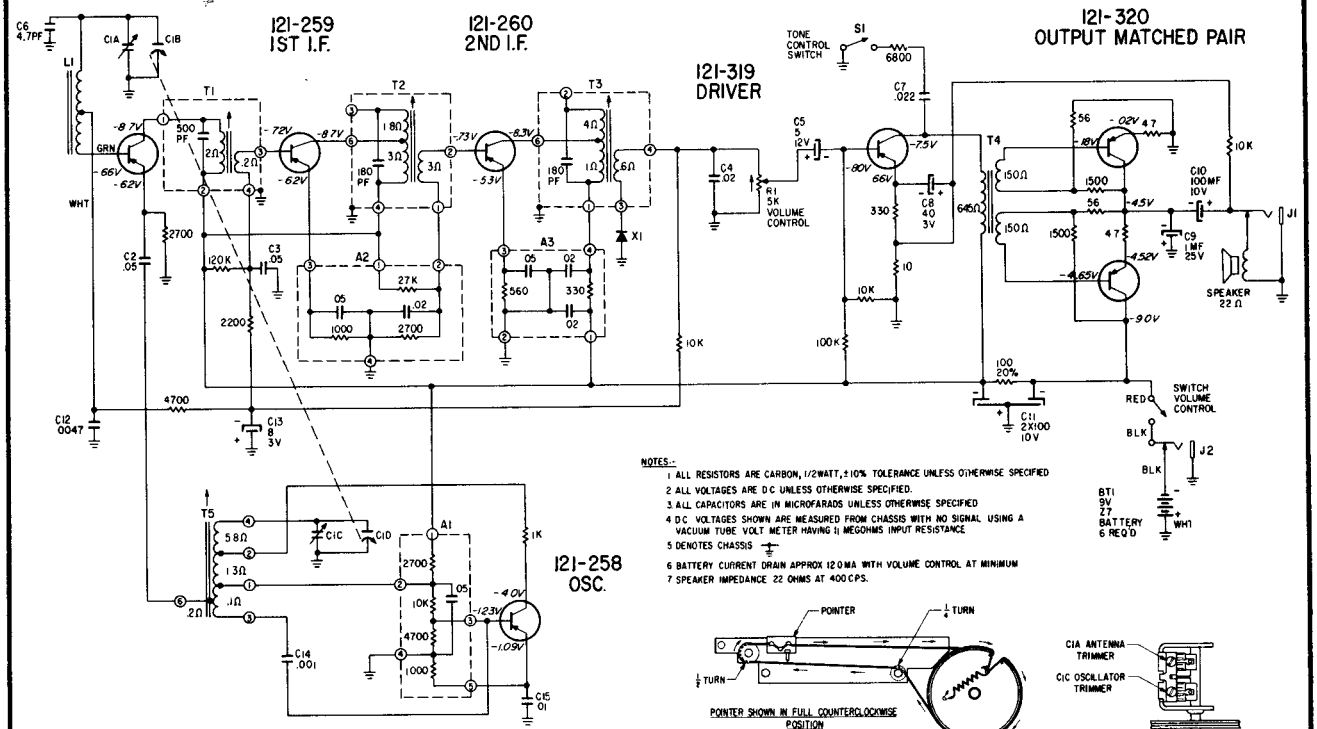


NOTES:-
1. ALL RESISTORS ARE CARBON, 1/2WATT, ±10% TOLERANCE UNLESS OTHERWISE SPECIFIED
2. ALL VOLTAGES ARE DC UNLESS OTHERWISE SPECIFIED.
3. ALL CAPACITORS ARE IN MICROFARADS UNLESS OTHERWISE SPECIFIED
4. DC VOLTAGES SHOWN ARE MEASURED FROM CHASSIS WITH NO SIGNAL USING A VACUUM TUBE VOLT METER HAVING 11 MEGOHMS INPUT RESISTANCE
5. DENOTES CHASSIS
6. BATTERY CURRENT DRAIN APPROX 12.0 MA WITH VOLUME CONTROL AT MINIMUM
7. SPEAKER IMPEDANCE 22 OHMS AT 400 CPS.

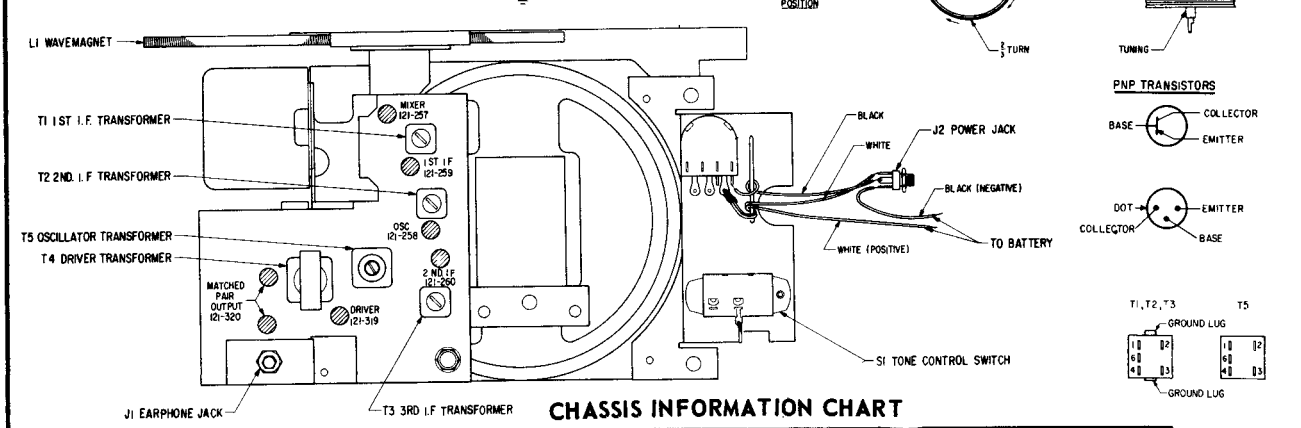


## CHASSIS INFORMATION CHART

| Chassis | Part No. | OSC. | Mixer | 1st I.F. | 2nd I.F. | Crystal Diode Detector | Driver | Output | Supplier |
|---|---|---|---|---|---|---|---|---|---|
| 7MT44Z2 | Zenith E.I.A. Type | 121-258 2N1526 PNP | 121-257 2N1524 PNP | 121-259 2N1524 PNP | 121-260 2N1524 PNP | 103-44 or 403-1 | 121-319 2N408 PNP | 121-320 2N408 Matched Pair PNP | R. C. A. |

## ALIGNMENT PROCEDURE

| Operation | Input Signal Frequency | Connect Inner Conductor From Oscillator To | Connect Outer Shield Conductor From Oscillator To | Set Dial At | Trimmers | Purpose |
|---|---|---|---|---|---|---|
| 1 | 455 KC | ONE TURN LOOSELY COUPLED TO WAVEMAGNET | Chassis | 600 KC | Adj. T1, T2, T3 for maximum output. | For. I.F. Alignment |
| 2 | 1620 KC | | | Gang wide open | C1C | Set oscillator to dial scale. |
| 3 | 600 KC | | | Set dial near 600 KC | Adjust slug in T6 | Adjust T6 for maximum output while rocking gang. Adjust for maximum output regardless of dial accuracy. |
| 4 | REPEAT STEPS 2 & 3 | | | | | |
| 5 | 1260 KC | | | 1200 KC | C1A | Align loop ant. |

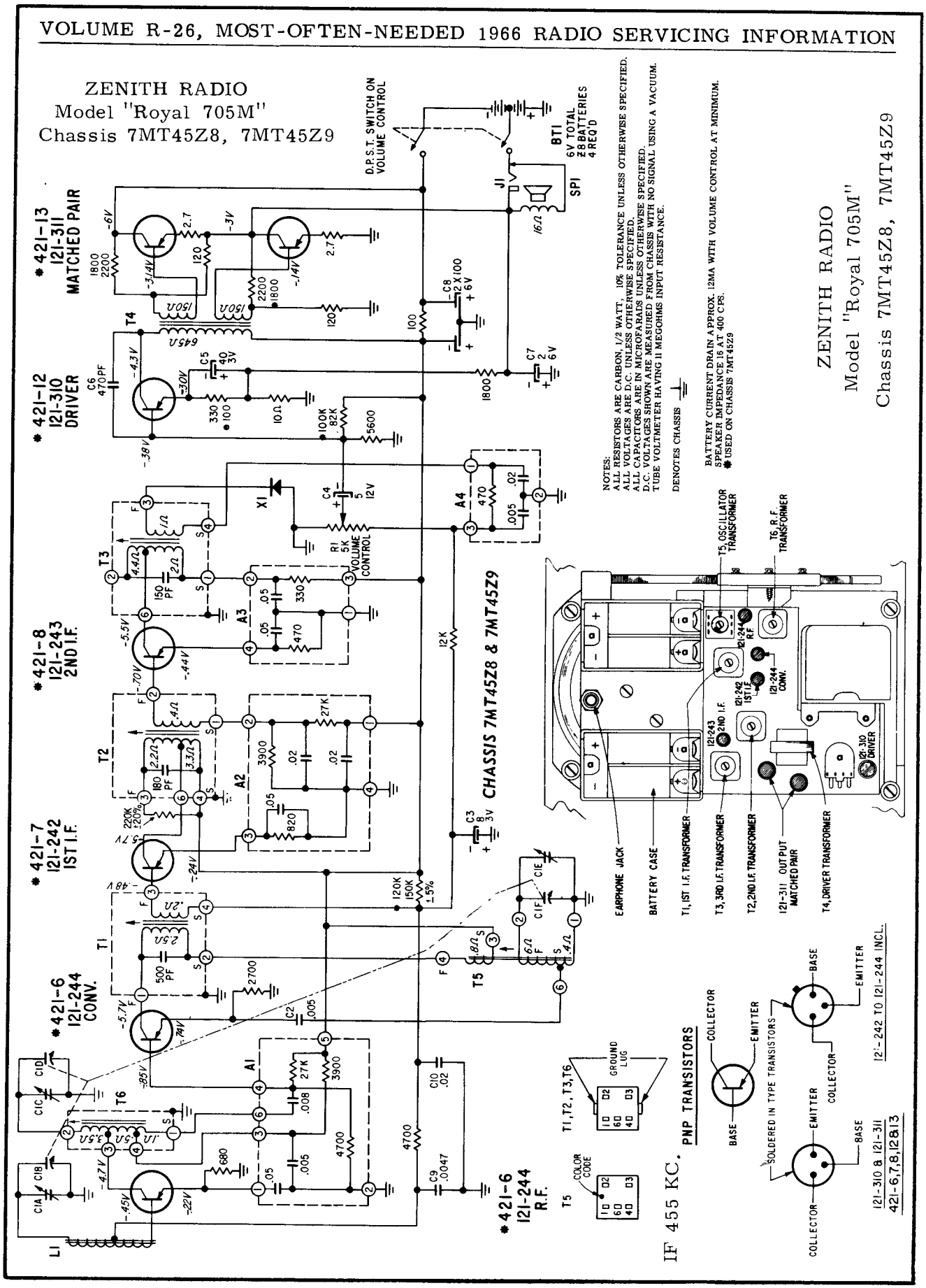
ZENITH RADIO
Model "Royal 705M"
Chassis 7MT45Z8, 7MT45Z9
D.P.S.T. SWITCH ON VOLUME CONTROL
BT1 6V TOTAL 28 BATTERIES 4 REQ'D
SP1
J1
* 421-13 121-311 MATCHED PAIR
* 421-12 121-310 DRIVER
* 421-8 121-243 2ND I.F.
* 421-7 121-242 1ST I.F.
* 421-6 121-244 CONV.
* 421-6 121-244 R.F.
CHASSIS 7MT45Z8 & 7MT45Z9
R1 5K VOLUME CONTROL
NOTES:
ALL RESISTORS ARE CARBON, 1/2 WATT, 10% TOLERANCE UNLESS OTHERWISE SPECIFIED.
ALL VOLTAGES ARE D.C. UNLESS OTHERWISE SPECIFIED.
ALL CAPACITORS ARE IN MICROFARADS UNLESS OTHERWISE SPECIFIED.
D.C. VOLTAGES SHOWN ARE MEASURED FROM CHASSIS WITH NO SIGNAL USING A VACUUM TUBE VOLTMETER HAVING 11 MEGOHMS INPUT RESISTANCE.
DENOTES CHASSIS
BATTERY CURRENT DRAIN APPROX. 12MA WITH VOLUME CONTROL AT MINIMUM.
SPEAKER IMPEDANCE 16 AT 400 CPS.
* USED ON CHASSIS 7MT45Z9
ZENITH RADIO
Model "Royal 705M"
Chassis 7MT45Z8, 7MT45Z9
T5, OSCILLATOR TRANSFORMER
T6, R.F. TRANSFORMER
EARPHONE JACK
BATTERY CASE
T1, 1ST I.F. TRANSFORMER
T3, 3RD I.F. TRANSFORMER
T2, 2ND I.F. TRANSFORMER
121-311 OUTPUT MATCHED PAIR
T4, DRIVER TRANSFORMER
IF 455 KC.
T1, T2, T3, T6
GROUND LUG
T5
COLOR CODE
PNP TRANSISTORS
COLLECTOR
EMITTER
BASE
SOLDERED IN TYPE TRANSISTORS
121-310 & 121-311
421-6,7,8,12813
121-242 TO 121-244 INCL.

## ZENITH RADIO Model "Royal 755M" Chassis 8MT41Z2

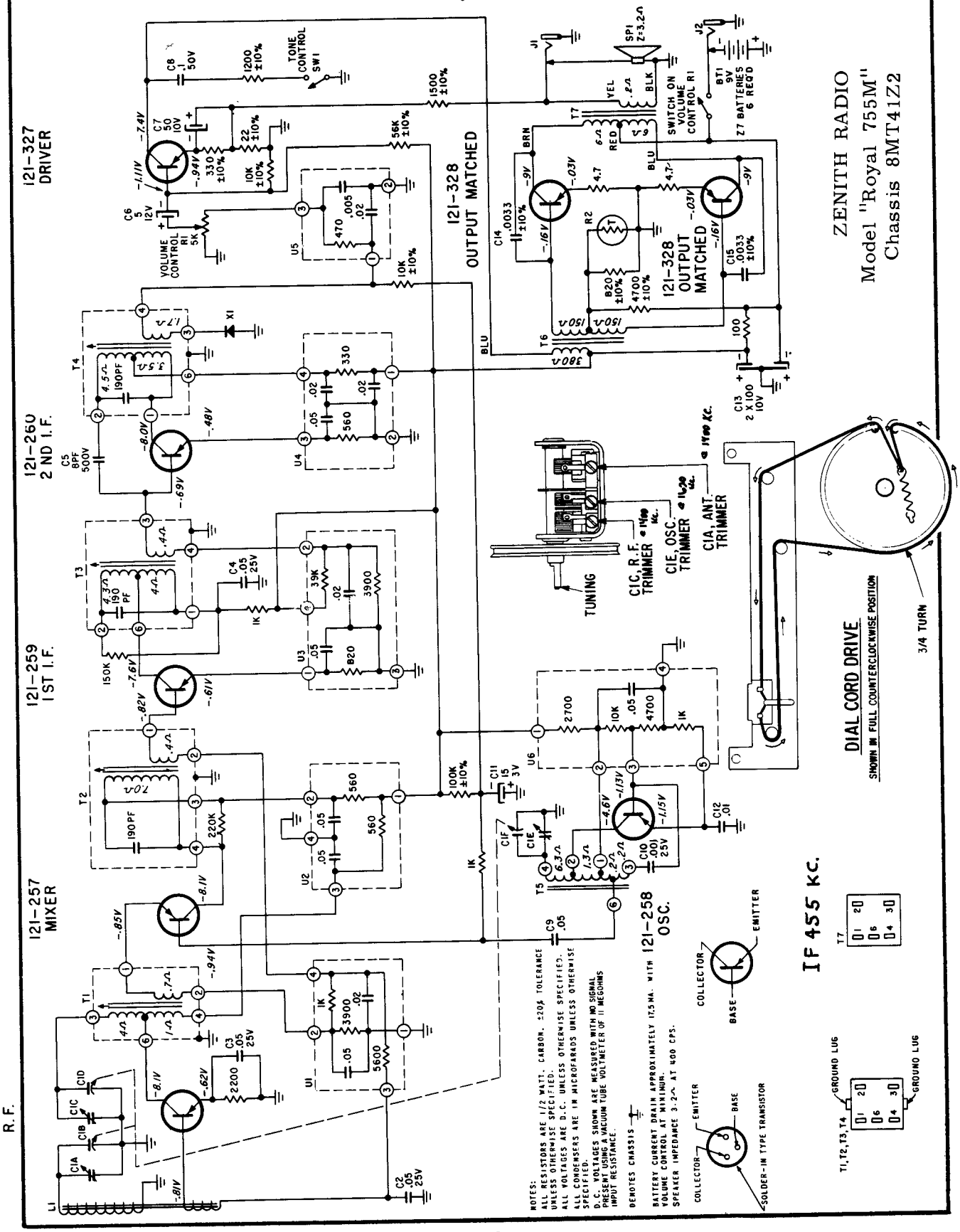

ZENITH RADIO
Model "Royal 180"
Chassis 8MT50Z8, 8MT50Z9

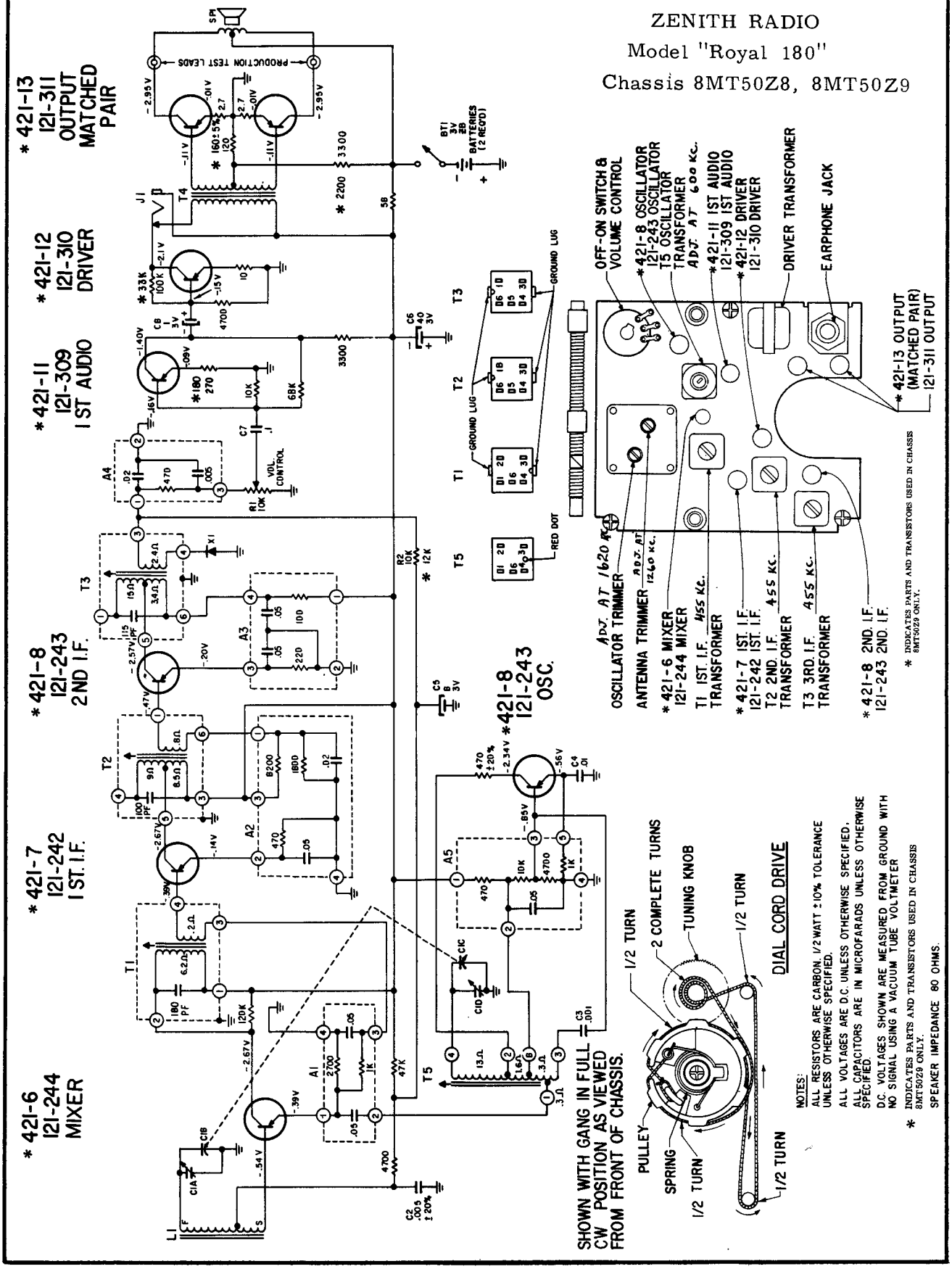

ZENITH RADIO Model "Royal 80" Chassis 8MT51Z8 and 8MT51Z9

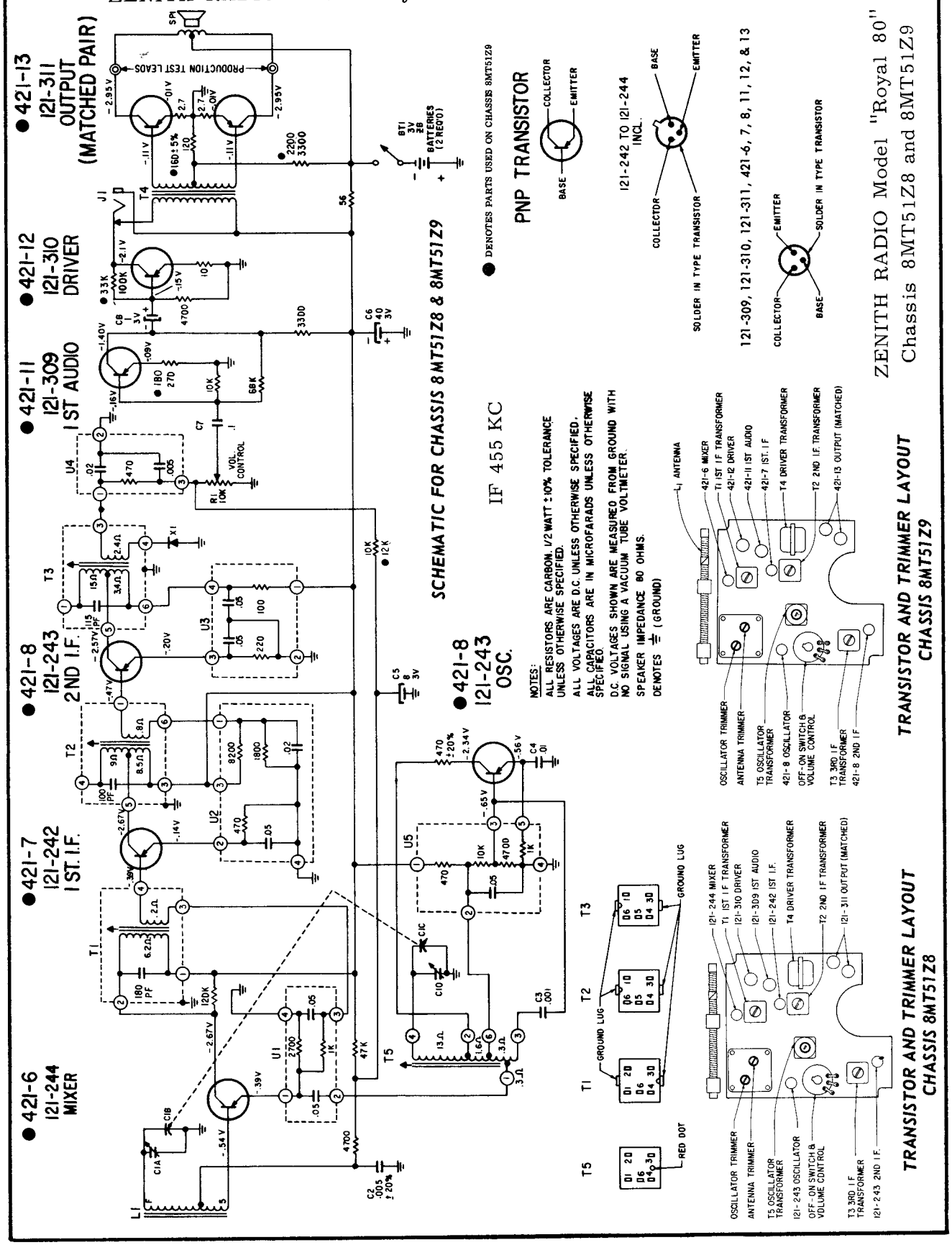

ZENITH RADIO Model "Royal 59" Chassis 8MT52Z8 and 8MT52Z9

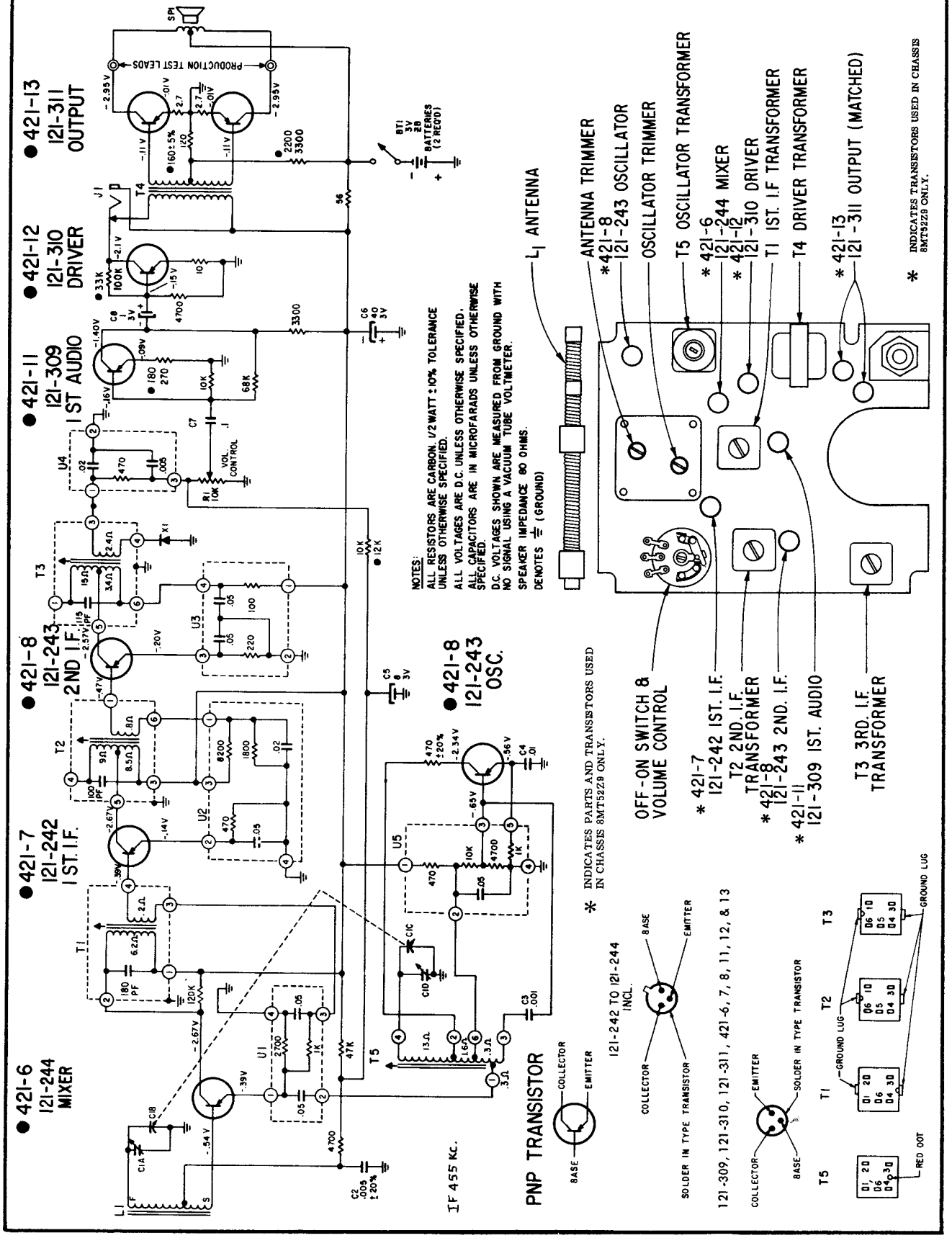

# ZENITH RADIO CORPORATION

## MODEL SA55

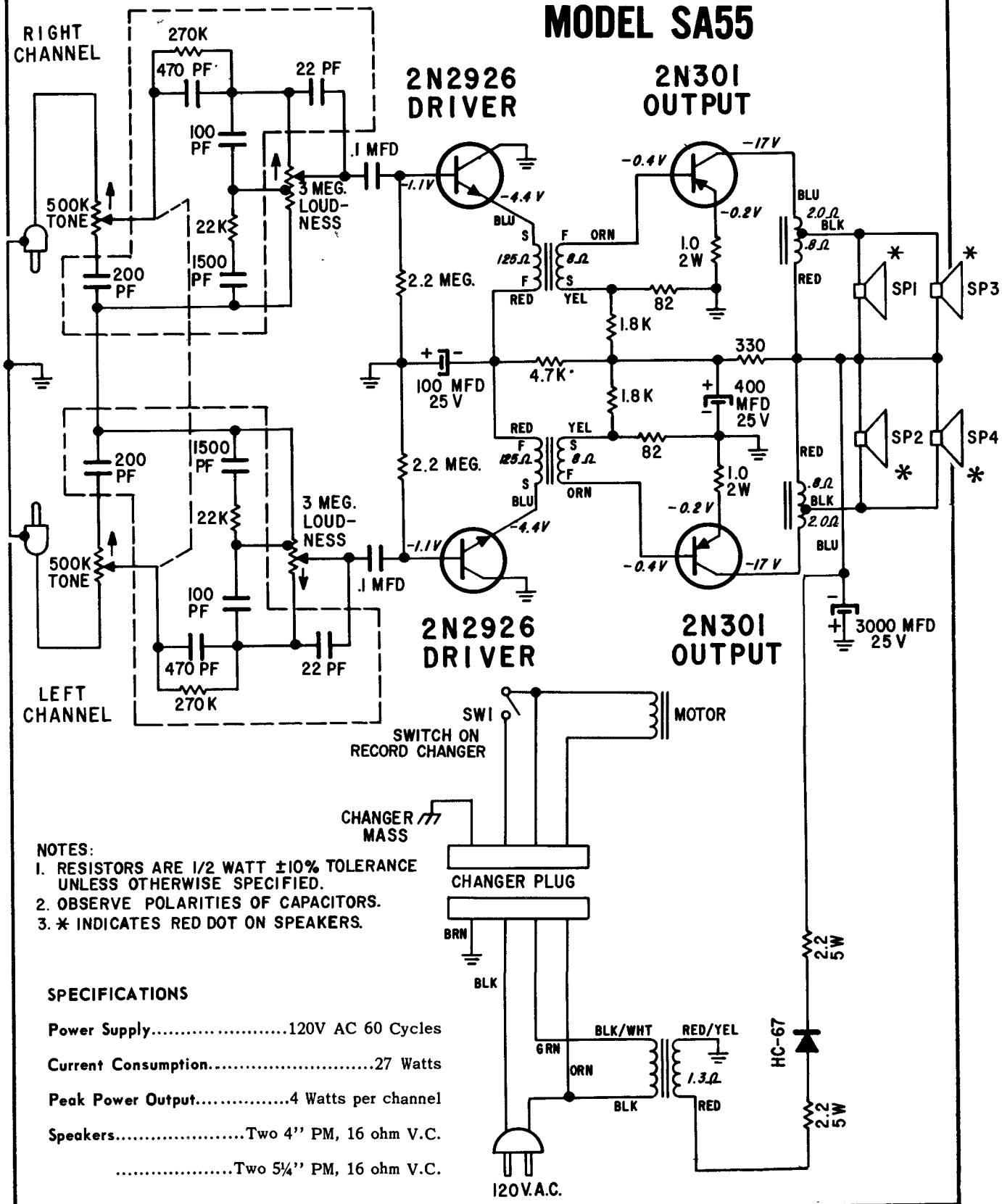


NOTES:
1. RESISTORS ARE 1/2 WATT ±10% TOLERANCE UNLESS OTHERWISE SPECIFIED.
2. OBSERVE POLARITIES OF CAPACITORS.
3. * INDICATES RED DOT ON SPEAKERS.

SPECIFICATIONS

Power Supply.....120V AC 60 Cycles

Current Consumption.....27 Watts

Peak Power Output.....4 Watts per channel

Speakers.....Two 4" PM, 16 ohm V.C.

.....Two 5¼" PM, 16 ohm V.C.

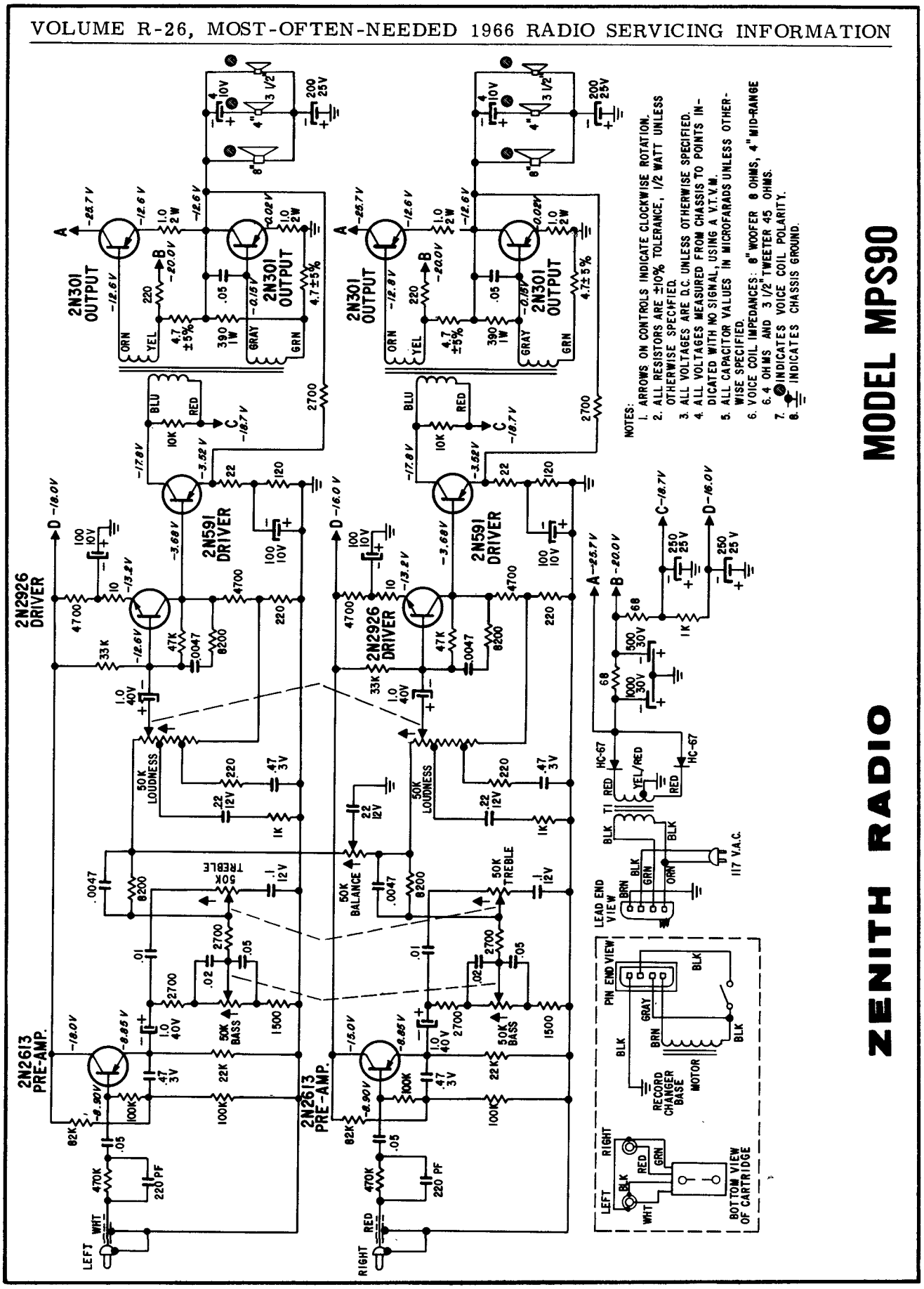
ZENITH RADIO
MODEL MPS90
2N2613 PRE-AMP.
2N2926 DRIVER
2N591 DRIVER
2N301 OUTPUT
50K LOUDNESS
50K TREBLE
50K BASS
50K BALANCE
117 V.A.C.
LEAD END VIEW
PIN END VIEW
RECORD CHANGER BASE
MOTOR
BOTTOM VIEW OF CARTRIDGE
LEFT
RIGHT
NOTES:
1. ARROWS ON CONTROLS INDICATE CLOCKWISE ROTATION.
2. ALL RESISTORS ARE ±10% TOLERANCE, 1/2 WATT UNLESS OTHERWISE SPECIFIED.
3. ALL VOLTAGES ARE D.C. UNLESS OTHERWISE SPECIFIED.
4. ALL VOLTAGES MEASURED FROM CHASSIS TO POINTS INDICATED WITH NO SIGNAL, USING A V.T.V.M.
5. ALL CAPACITOR VALUES IN MICROFARADS UNLESS OTHERWISE SPECIFIED.
6. VOICE COIL IMPEDANCES: 8" WOOFER 8 OHMS, 4" MID-RANGE 6.4 OHMS AND 3 1/2" TWEETER 45 OHMS.
7. INDICATES VOICE COIL POLARITY.
8. INDICATES CHASSIS GROUND.

## ZENITH RADIO Model 8NT04 Amplifier

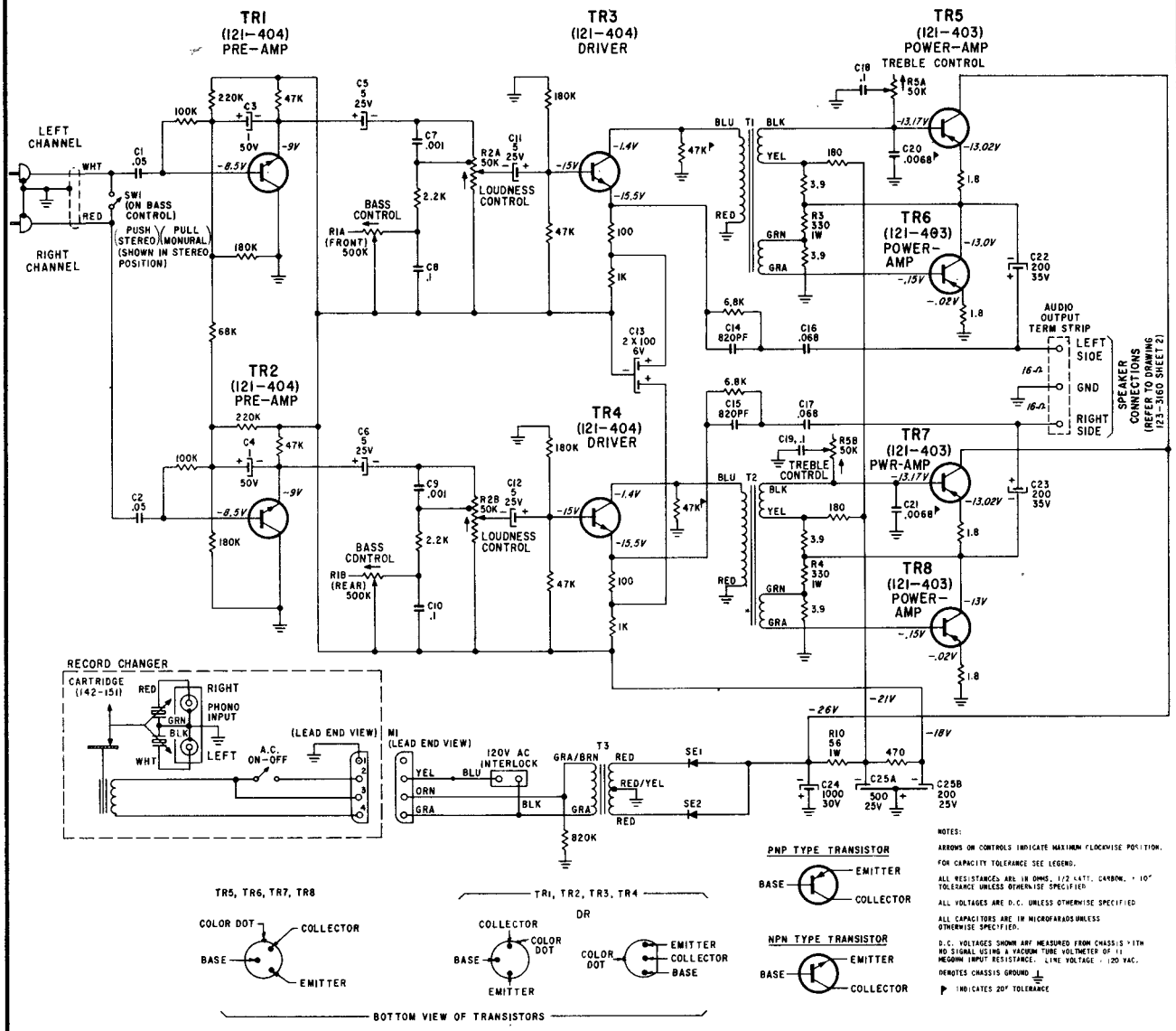


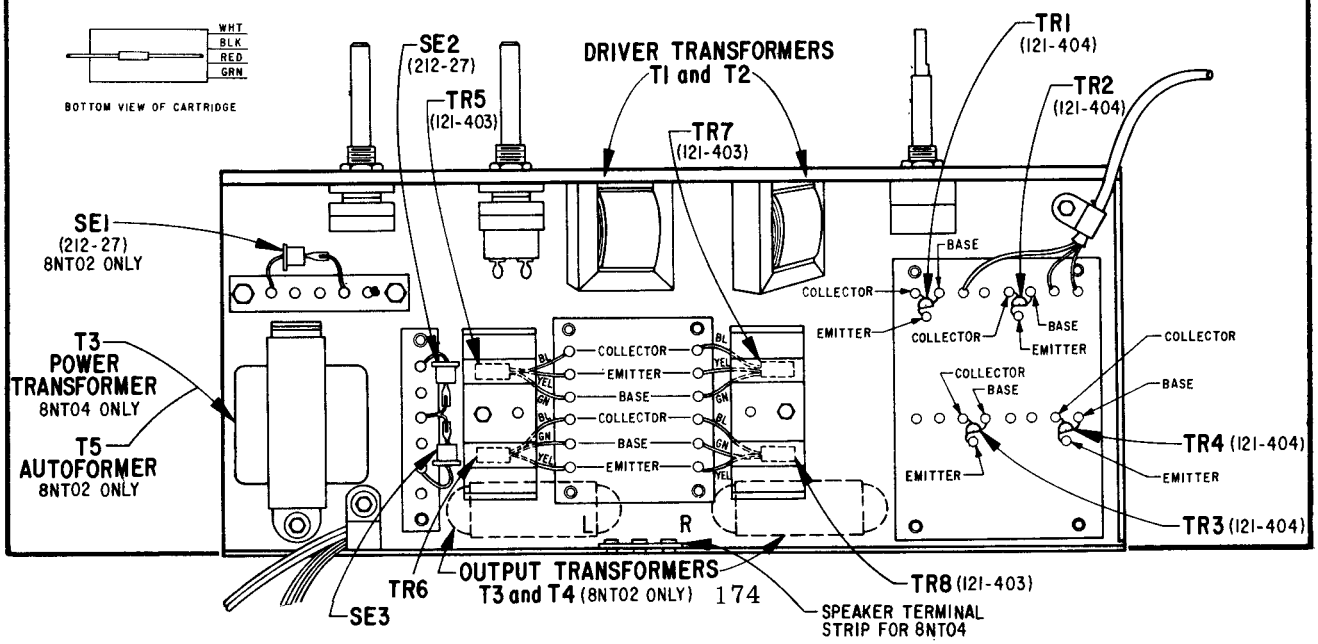

# INDEX

Under each manufacturer's name are listed that make chassis and models in numerical order, at left. The corresponding page number at right of each listing refers to the first page of each section dealing with such material.


**Admiral Corp.**
2B2 6
4E4 11
4F4 20
5V6,A 12
5W6 12
8A4 15
8B4 16
8F3 4
8K4 3
8L3,A 20
10A2 17
10J1 5
12B2 18
12H1 14
20C5,A 7
22C5,A 7
YG171 14
YD201GP,A 3
YD202GP,A 3
YD242 4
YD243 4
YD257 5
YH301GP 15
YH302GP 15
YH312 16
YH313 16
YH321 17
YG411 18
TM441 18
PA451 20
PS461 20
YG827 12
YG829 12
YG837 12
YG839 12
YG841 12
YG851 12
YG861 12
YG1027 6
YG1029 6
YG1037 6
YG1047 6
YG1057 6
YG1507 11
YG1527 11

**Admiral, Cont.**
YG1531 11
YG1571 7
SMG2201 7
SRG2201 7
SMG2205 7
SMG3001 7
SMG3002 7
SMG3701 7
SMG3705 7
SMG3711 7
YG8001,M 7
YG8002,M 7
YG8011,M 7
YG8012,M 7
YG8025,M 7
YG8031,M 7
YG8045,M 7
YG8051,M 7
YG8061,M 7
YG8075,M 7
YG8201 18
YG8215 18
YG8229 18

**Emerson Radio**
31L7 22
31L8 22
31L09 21
31L10 21
31L11 21
31T09 21
31T10 21
31T11 21
31L12 24
31L13 24
31L14 24
31L15 26
31L17 26
31T12 24
31T13 24
31T15 26
31T17 26
32P01A 27
32P06,A 27

**Emerson, Cont.**
32P07,A 27
32P09 28
32P10 28
32P11 28
32P12 27
120789 22
120791 21
120792 21
120793 21
120794 21
120795 26
120796 26
120797 26
120798 26
120818 24
120819 24
120826 21
120828 21
120832 27
120833 27
120836 28

**General Electric**
T2AB 38
TU50 35
TU500 35
P740A 31
P741A 31
P780H 30
P891A 29
P915E 31
P916E 31
P917E 31
P955E 32
C1410A 33
C1411A 33
C1412A 33
P1700A 34
P1701A 34
P1704A 34
P9151E 31
P9161E 31
P9171E 31

**Magnavox**
R252 39
A505 41
AM-802 40

**Matsushita**
RE-124 42

**Montgomery Ward**
GEN-1336A 43
GEN-1808A 44
GEN-1837A 44
GEN-1847A 44
GEN-1857A 44
GEN-1877A 44
GEN-1897A 44

**Motorola**
XP1C 63
XP2C 68
XT2B 59
XP3C 64
XT3B 59
AC4B 69
AC5B 45
TM5A 70
BC6A 62
TC7B 60
XP7C 66
TC8B 60
BC9B 62
XC11B 59
XC12B 59
BT13A 62
XC13B 59
TT14B 60
TT15B 60
XC14B 59
BT16B 62
23LK412B 90
23LK413B 90
23LK414B 90
23LK415B 90
23LK416B 90
AT23A 46
AT30B 69

**Motorola +**
AT31B 69
AC40A 45
AC43B 69
X58 51
X60 47
X61 52
X62 50
X64 54
X65 48
XP68B 55
XP69B 56
XP73B 57
MP100B 89
PP200B 88
PP201B 88
232 72
233 72
235S 72
TM295M 74
TM296M 76
PP301B 90
PP302B 90
SP310B 90
TM316M 78
TM325M 80
TM326M 82
TM336M 84
PK400B 90
PK401B 90
SK450B 90
SK451B 90
SK452B 90
SK453B 90
SK500B through SK509B 90
TM526A 86
HS-2334 90
HS-2336 90
HS-2339 90
HS-2347 88
HS-2348 89
HS-2349 90
HS-4143 46
HS-4152 45
HS-6127 47


(Index continued on page 176)

INDEX Continued


Motorola +
HS-6131 50
HS-6133 48
HS-6136 51
HS-6137 52
HS-6139 54
HS-6202 55
HS-6207 56
HS-6208 57
HS-7201 59
HS-8201 62
HS-8202 62
HS-8206 60
HS-8207 60
HS-66200 63
HS-66201 68
HS-66202 64
HS-66206 66
HS-67201 69
HS-68202 69

Panasonic
RE-124 42

Philco Corp.
P10ST 100
P25ST 104
P710 97
P720 96
P721 96
P722 96
P723 96
P724 96
NT809 95
NT814 98
NT815 99
P880 96
P881 96
P882 96
P883 96
P884 96
P885 96
P933 97
P941 97
P1002 100
P1441 106
P1442 106
P1444 107
P1445 108
P1446 108
P1511 109
P1513 110
P1515 110
P1710 104
P1718 100

Philco, Cont.
P1719 104
P1722 104
P1735 104
P1737 104

RCA Victor
VGE-03W 122
VGP-05A,+ 123
VGP-08A,+ 123
RGH-10 119
RGA-12Y 120
RGH-12 116
RHA-12G,+ 111
RHD-13N,Y 111
RGA-15A,+ 120
VGE-15M 121
RGG-17B 112
RHA-17A,+ 111
RHD-17A,+ 111
RHH-17 117
RGD-20N,+ 120
RHD-21A,+ 111
RHG-21 113
RGG-22A,+ 112
RGG-25B,+ 112
RHG-25 113
VGP-25E,T 122
RGA-27 111
RGG-29E 114
RHC-29W 124
RHD-29W 128
RGD-30 111
RHG-30E 115
RHC-33W 124
VGP-34E,G 122
RHC-37L 124
RGA-39W 118
RHA-39W 128
RGA-40W 118
RHC-41W 124
VGP-43E,T 122
RHC-45F 124
RHC-49S 124
VGP-72 121
VGP-83 121
RS-216A 121
RS-219A,B 121
RS-225,A 123
RC-1213A 120
RC-1213AA 111
RC-1213AB 111
RC-1213K 120
RC-1213M 111
RC-1213R 111

RCA, Cont.
RC-1213W 111
RC-1219A 112
RC-1219B 112
RC-1219D 113
RC-1220A 124
RC-1221A 114
RC-1221B 115
RC-1222A 116
RC-1224 118
RC-1224C 128
RC-1224D 128

Sears, Roebuck
6055 132
6056 132
6200 134
6202 131
6203 131
6204 131
6208 130
6209 130
6210 130
6211 130
6223 129
6224 129
6225 129
132.90301 131
132.91301 130
528.63131 129
528.63140 134
528.63470 132
528.63471 132

Sony
TR-8 135
TR-830 136

Sylvania
P01-1 141
P02-1 142
P03-1 143
AT40 137
45P50 141
45P60 142
45P61 143
AK45 137
AK46 137
TR50 138
U50-1,-2 137
TR54 139
TR86 140
325-1 138
328-1 139
335-1 140

Westinghouse
H-75AC1E 151
H-75AC2E 151
H-114AC1 151
H-127ACS1 151
H-127ACS6 151
H-200T5 147
H-201T5 147
H-205L5 147
H-210L5 147
H-211L5 147
H-215L5 147
H-216L5 147
CR-500 147
CR-501 147
CR-515 147
CR-520 147
CR-521 147
CR-525 145
CR-526 145
CR-566 148
H-707P6+ 150
H-953XP8 148
H-954P6 144
H-955P6 144
H-956L6 144
H-957L6 144
H-957L6A 145
H-957L6B 145
H-958L6 144
H-958L6A 145
H-968PL 149
H-970X 146
H-972XL 146
H-974XL 146
V-2461-2 150
V-2463-1 144
V-2463-2 144
V-2463-3 145
V-2463-4 145
V-2463-5 146
V-2463-6 145
V-2466-1 147
V-2466-7 147
V-2538-2 151
V-2539-1 151
V-2580-1 148
V-2585-1 149

Zenith Radio
4LT20Z2 152
4LT21Z2 152
5M02 153
and 156
5M03 154
5M04 156

Zenith, Cont.
5M05 156
5M06 155
5M13 157
5N02 158
5N03 159
5N07 160
5N09 160
5N12 161
5N13 161
6N03 162
6N05 163
7M03 164
7M04 165
7MT44Z2 166
7MT45Z8 167
7MT45Z9 167
8MT41Z2 168
8MT50Z8 169
8MT50Z9 169
8MT51Z8 170
8MT51Z9 170
8MT52Z8 171
8MT52Z9 171
8NT04 174
SA55 172
59 171
80 170
MPS90 173
180 169
T305C,+ 153
T315B,+ 155
M504C,+ 156
M506C,+ 156
N506C,+ 159
M507B,+ 154
M508B,+ 156
N508B 159
N509C,+ 161
M511C,+ 154
N511C,+ 158
M512B,+ 157
N512A 161
N513B,+ 158
N514C,+ 158
N516J,+ 160
N519C,+ 160
N615C,+ 163
N624A,+ 162
705M 167
710M 166
M729A 164
M730W 165
755M 168
M860 152
M875 152