Most-Often-Needed

1965

Volume R-25

RADIO DIAGRAMS

and Servicing Information

Compiled by

M. N. BEITMAN

SUPREME PUBLICATIONS

Supreme Publications for Faster Radio-Television Repairs

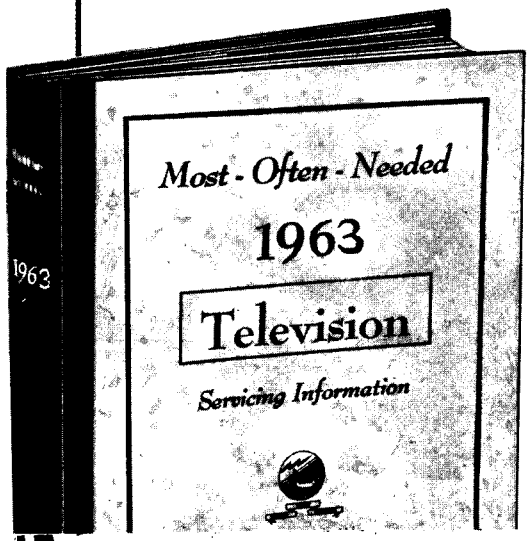

COVERS ALL POPULAR SETS

Here is your service data for faster, easier TV repairs. Lowest priced. Best by comparison. *Supreme* **TV** manuals have all needed service material on every popular TV set. Helpful, practical, factory-prepared data that will really make TV servicing easy for you. Benefit and save with these amazing values in service manuals. Only $3 per large volume. Used by 184,000 wise servicemen for faster repairs. Join them; begin to make TV repairs easily.

The repair of any TV set is simple with **Supreme Television** service manuals. Every set is covered in a practical manner to simplify trouble-shooting and repair. With this help find toughest faults in a jiffy. Most $3 TV volumes cover a whole year.

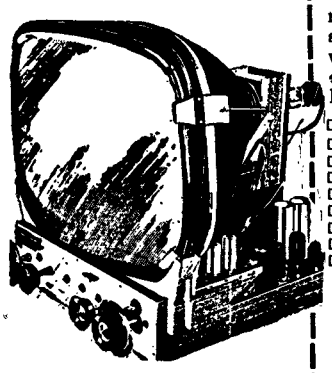

RADIO Manuals

Your best source for all needed RADIO diagrams and service data. Covers everything from most recent **1964** radios to pre-war old-timers; home radios, stereo, combinations, transistor portables, FM. Every manual has large schematics, all needed alignment facts, printed boards, voltages, trimmers, dial stringing, and hints. Volumes are big, 8½x11 inches, about 190 pages. See coupon at right for list of SUPREME popular radio service manuals ▶

NO-RISK ORDER COUPON

TELEVISION SERVICE MANUALS

Supreme TV manuals are best for faster, easier TV repairs. Lowest priced. Factory data on practically all sets. Complete circuits, all needed alignment facts, wiring board views, waveforms, voltages, production changes, and double-page schematics. Only $3 per large annual manual. Check volumes wanted.

☐ *New* 1964 Television Manual, $3. ☐ 1963 TV, $3.
☐ Additional 1962 TV, $3. ☐ Early 1963 TV, $3.
☐ 1961 TV Manual, $3. ☐ 1960 TV Manual, $3.
☐ Additional 1959 TV, $3. ☐ Early 1959 TV, $3.
☐ 1958 TV Manual, $3. ☐ Additional 1957 TV, $3.
☐ Early 1957 Television, $3. ☐ 1959 TV Manual, $3.
☐ Additional 1955 TV, $3. ☐ Early 1955 TV, $3.
☐ 1954 TV, $3. ☐ 1953 TV, $3. ☐ 1952 TV, $3.
☐ 1951 TV, $3. ☐ Master Index to all Manuals, 25¢

RADIO DIAGRAM MANUALS

Here are low-priced radio manuals that simplify repairing. Cover everything from most recent 1964 radios to pre-war old-timers; home radios, stereo, combinations, transistor portables, FM, and auto sets. Large schematics, all needed alignment facts, printed boards, voltages, dial stringing, hints. Volumes are big, 8½ x 11", about 190 pages, each.

$2.50

☐ 1964 Manual,
☐ 1953, ☐ 1992, ☐ 1961, ☐ 1990, ☐ 1959, ☐ 1955,
☐ 1957, ☐ 1959, ☐ 1955, ☐ 1954, ☐ 1953, ☐ 1952,
☐ 1951, ☐ 1950, ☐ 1949, ☐ 1946, ☐ 1947, ☐ 1949,
☐ 1942, ☐ 1941, ☐ 1940, ☐ 1925-35, EACH, $2.50
☐ Auto Radio 1964-65 Diagram Manual, $2.50

SUPREME PUBLICATIONS

1760 Balsam Road, Highland Park, ILL.

Rush today **TV** and **Radio** manuals checked in no-risk order form of this ad. Send postpaid, I am enclosing full price. You guarantee my complete satisfaction or my money back.

Name: _____

Address: _____

City: _____ State: _____

ADMIRAL

Chassis 4A4, used in Models Y3503, Y3508, Y3509

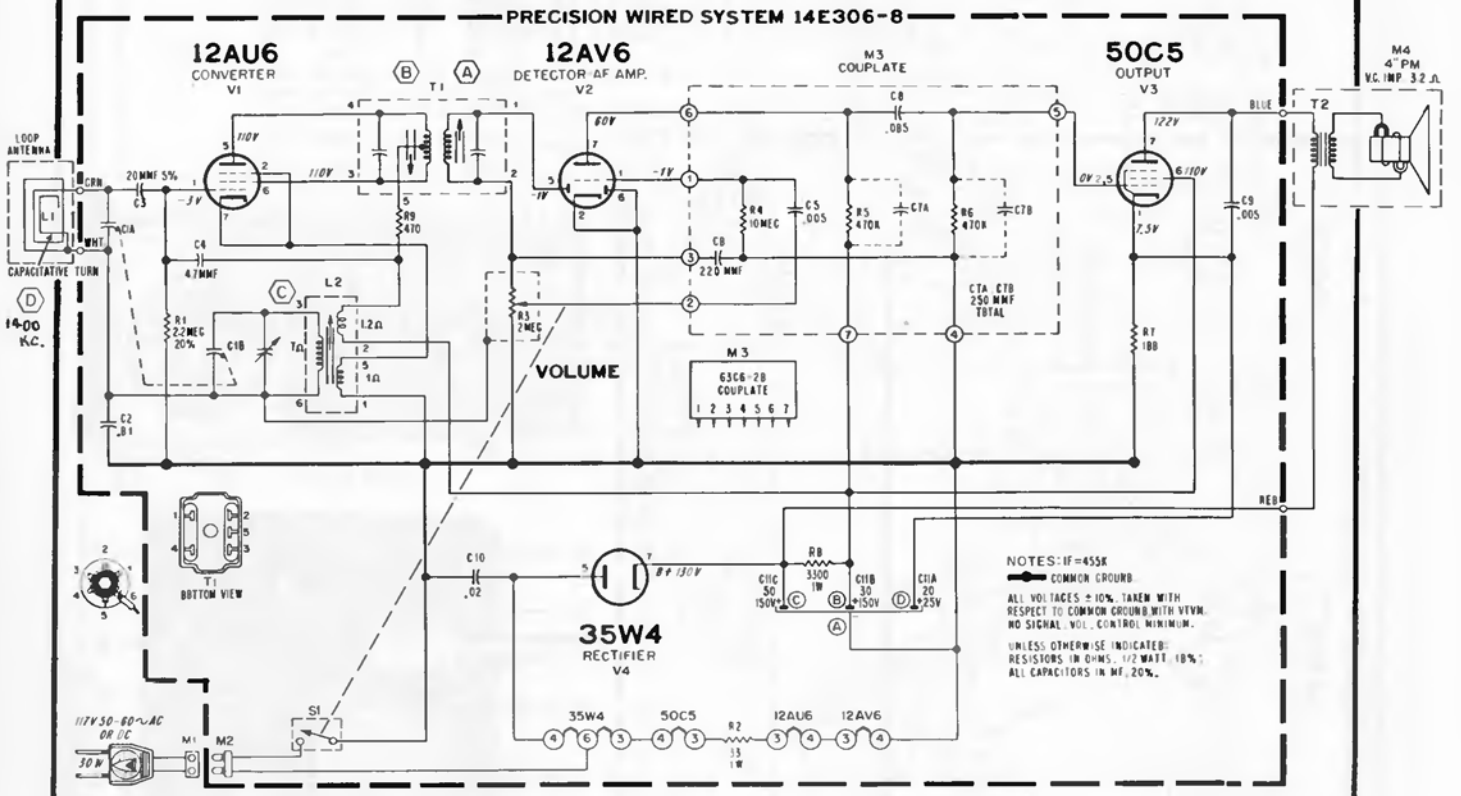

ALIGNMENT PROCEDURE

Set volume control full on.

Connect output meter across output secondary. Disconnect speaker and use a 3.2 ohm load.

Use lowest setting of signal generator capable of producing adequate indication on lowest scale of meter.

By using alignment tool 98A30-7, you can align the IF transformer slugs from the top of the chassis.

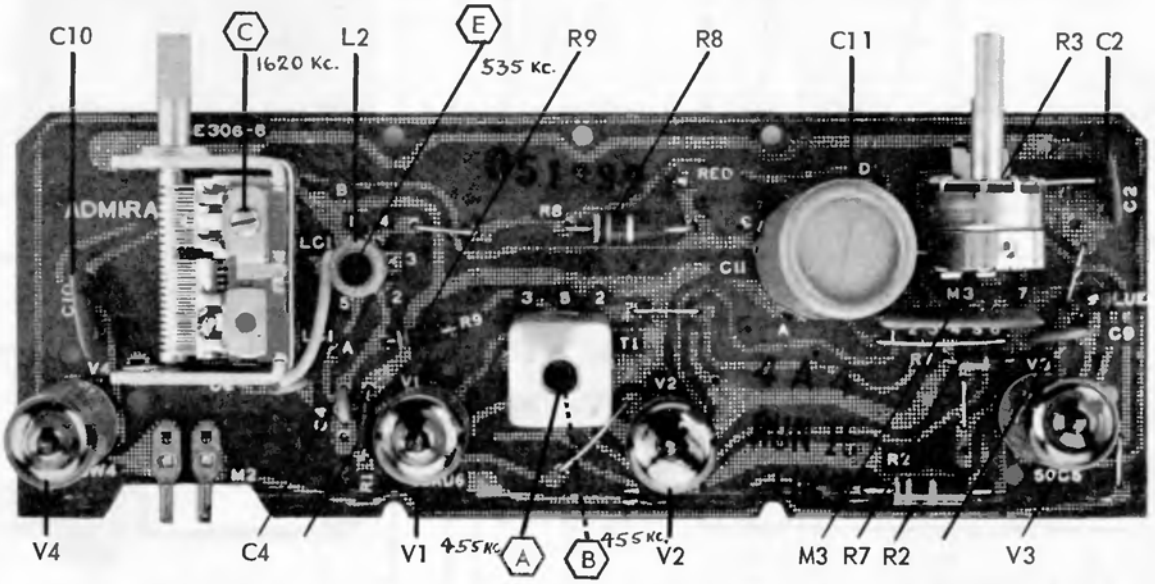

TOP VIEW OF CHASSIS 4A4 SHOWING COMPONENTS AND ALIGNMENT POINTS

Admiral

MODEL CHART		
MODEL	COLOR	CHASSIS
Y3703	White	5E6
Y3708	Green	
Y3709	Blue	
Y3710	Gray	
Y3714	Pink	
Y3717	Beige	
Y3720	Gray	
Y3727	Beige	
Y3729	Blue	

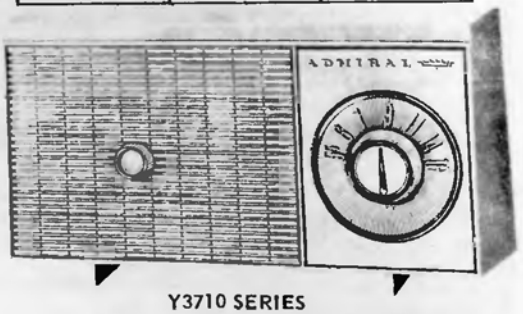

Y3710 SERIES

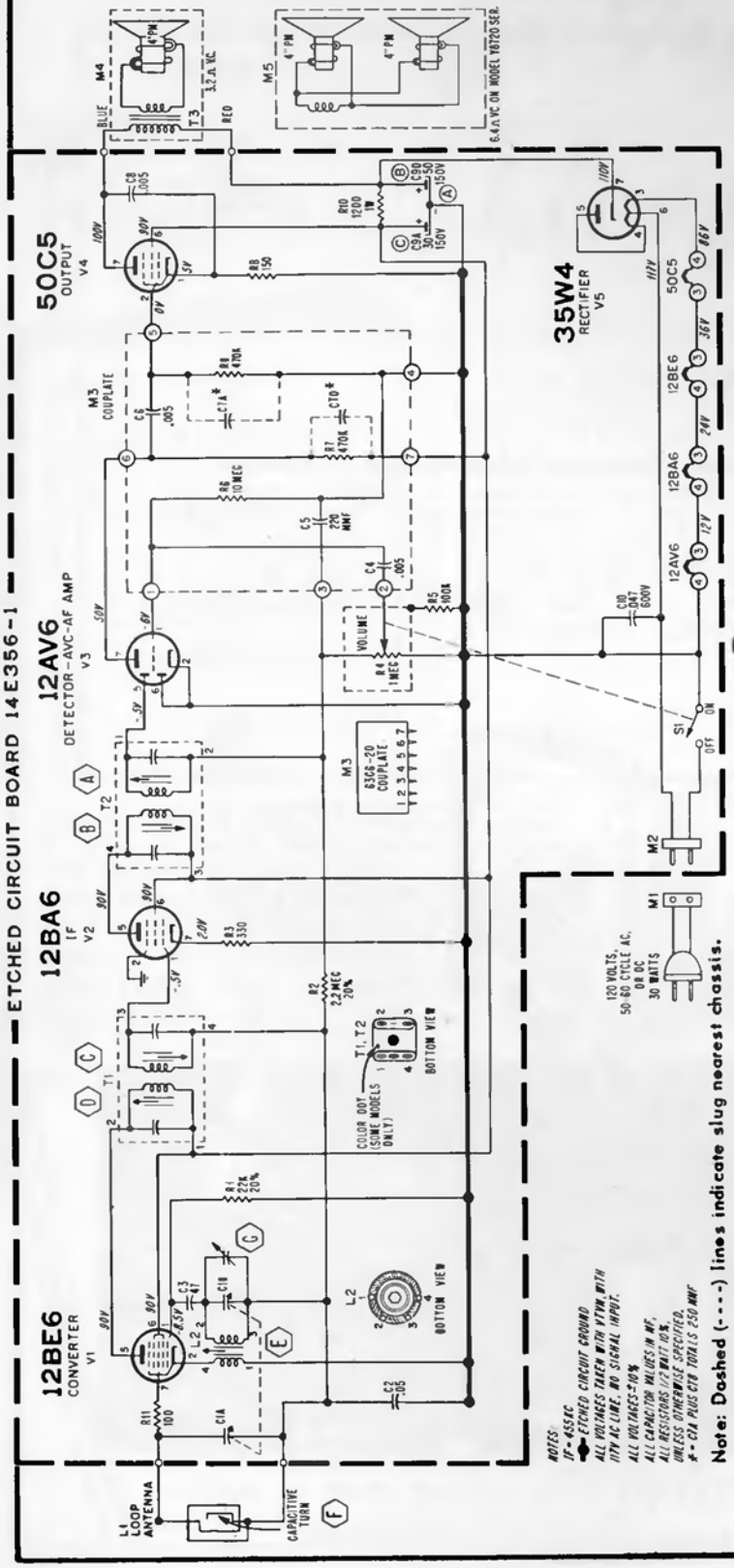

Note: Dashed (----) lines indicate slug nearest chassis.

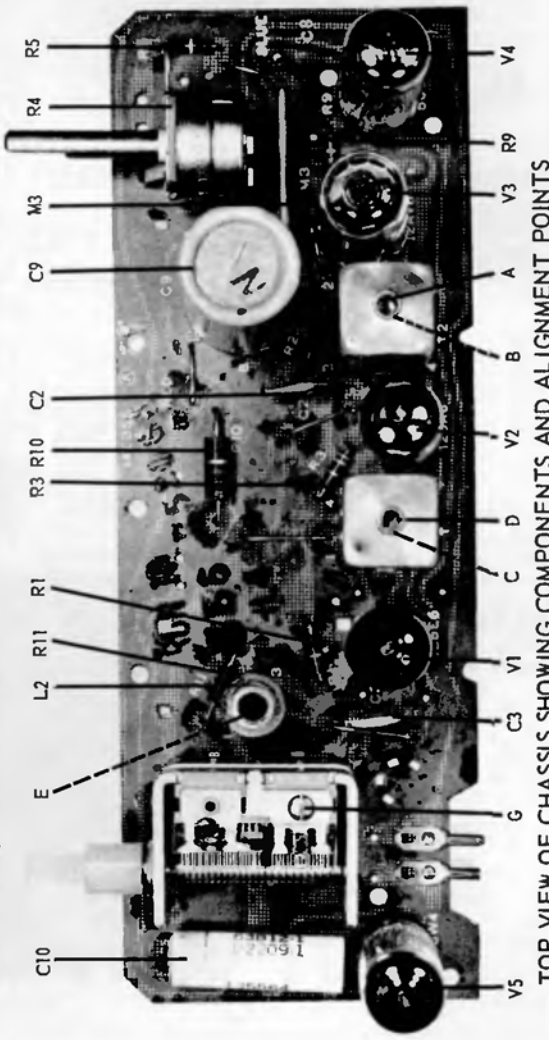

TOP VIEW OF CHASSIS SHOWING COMPONENTS AND ALIGNMENT POINTS

Admiral

Chassis 5D6D, Models Y3321A, Y3323A,
Chassis 5K6, Models Y3513, Y3517, Y3519,
Chassis 5L6, Models Y3523, Y3528, Y3529,

The following clock models are similar to above:
Chassis 5D6E, Models Y3543, Y3554, Y3557, Y3559,
Chassis 5D6F, Models Y3381A, Y3383A,
Chassis 5M6, Models Y3564, Y3568, Y3569, Y3573, Y3577, Y3579.

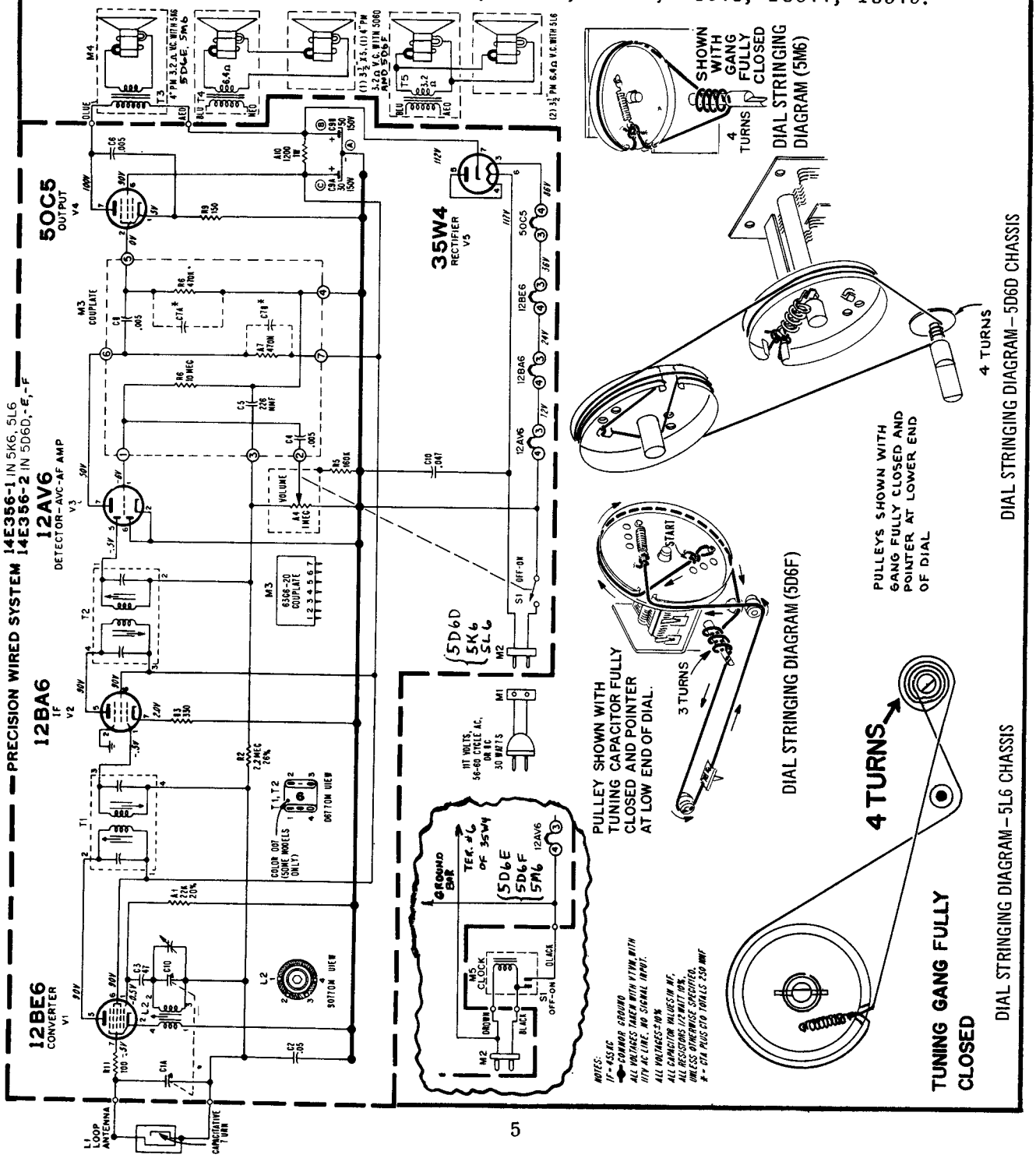

Admiral

Chassis 6W3, 6W3A, used in Models Y3408, Y3411, Y3412

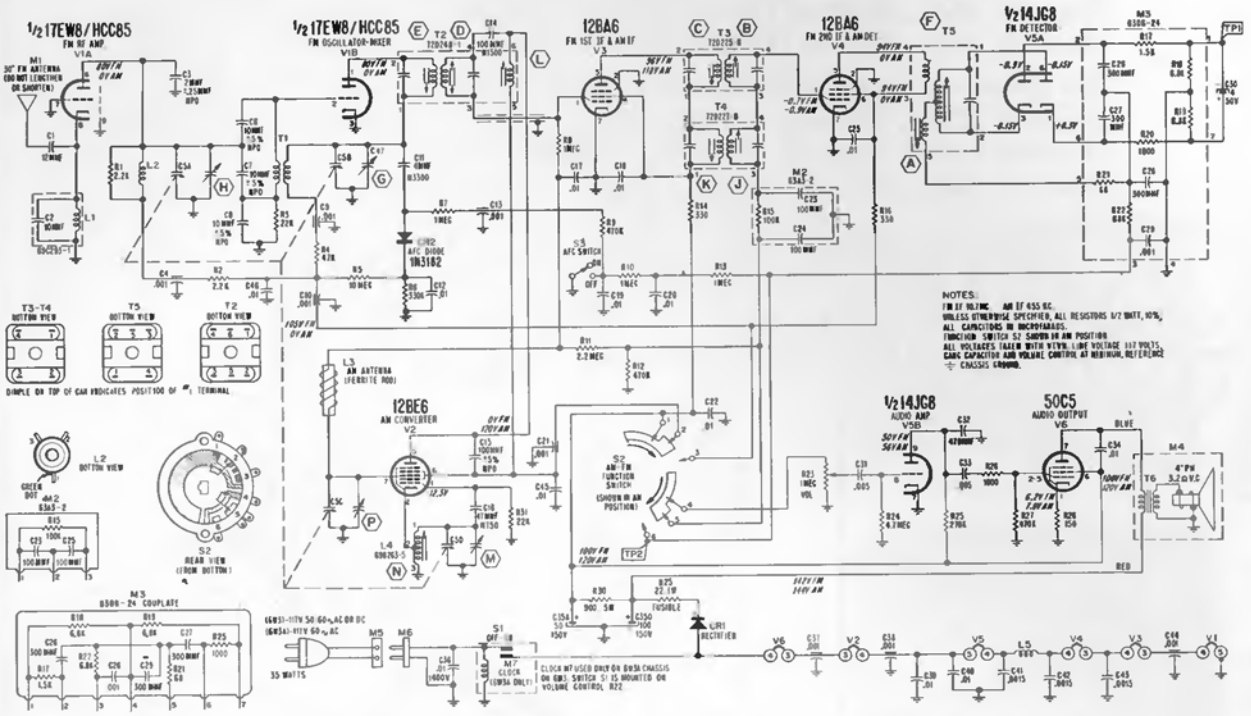

CHASSIS REMOVAL

1. Loosen two screws in back of cabinet until they are free from the cabinet front.

2. Remove two screws from bottom securing cabinet front to cabinet back.

3. With screwdriver, carefully pry cabinet front assembly away from the cabinet back by inserting screwdriver tip in the two notches in bottom of cabinet front assembly. This will break the AC interlock connection and allow the chassis with cabinet front to be pulled straight out from cabinet back.

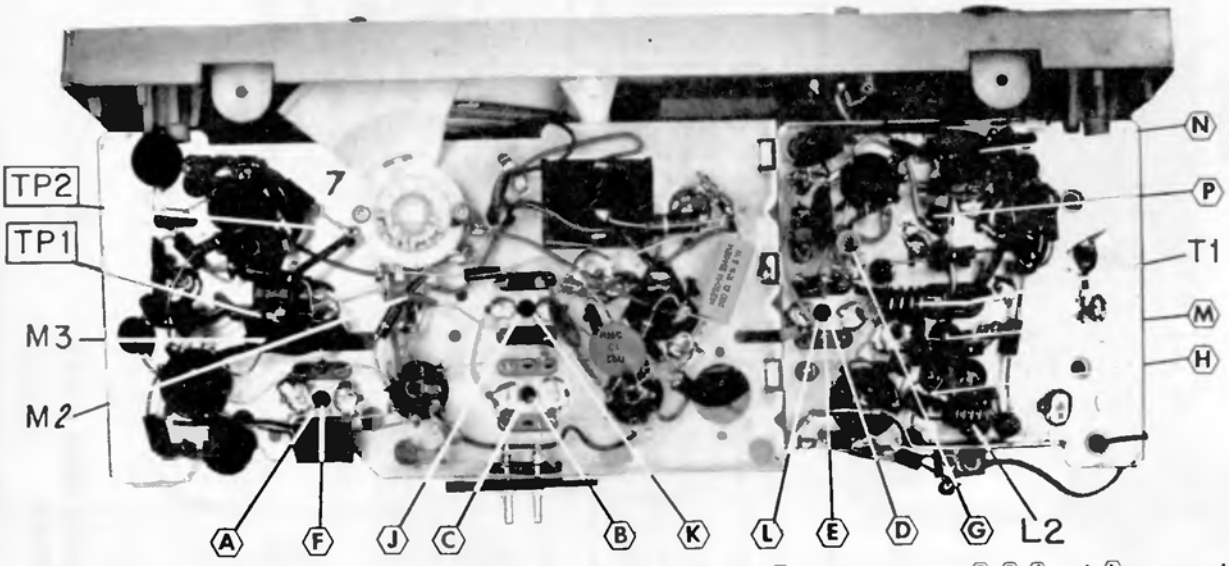

BOTTOM VIEW WITH SHIELD REMOVED

Ⓐ Ⓒ Ⓔ and Ⓚ are bottom slugs. Ⓑ Ⓕ Ⓙ and Ⓛ are top slugs. Ⓖ Ⓗ Ⓜ and Ⓟ are adjustable from the top of the chassis only.

ADMIRAL

MODEL	COLOR	CHASSIS
Y2411GP Y2413GP	Black White	8K2-1N
Y2421GP Y2423GP	Black White	8K2-2N
Y2441	Black	8K2-3N

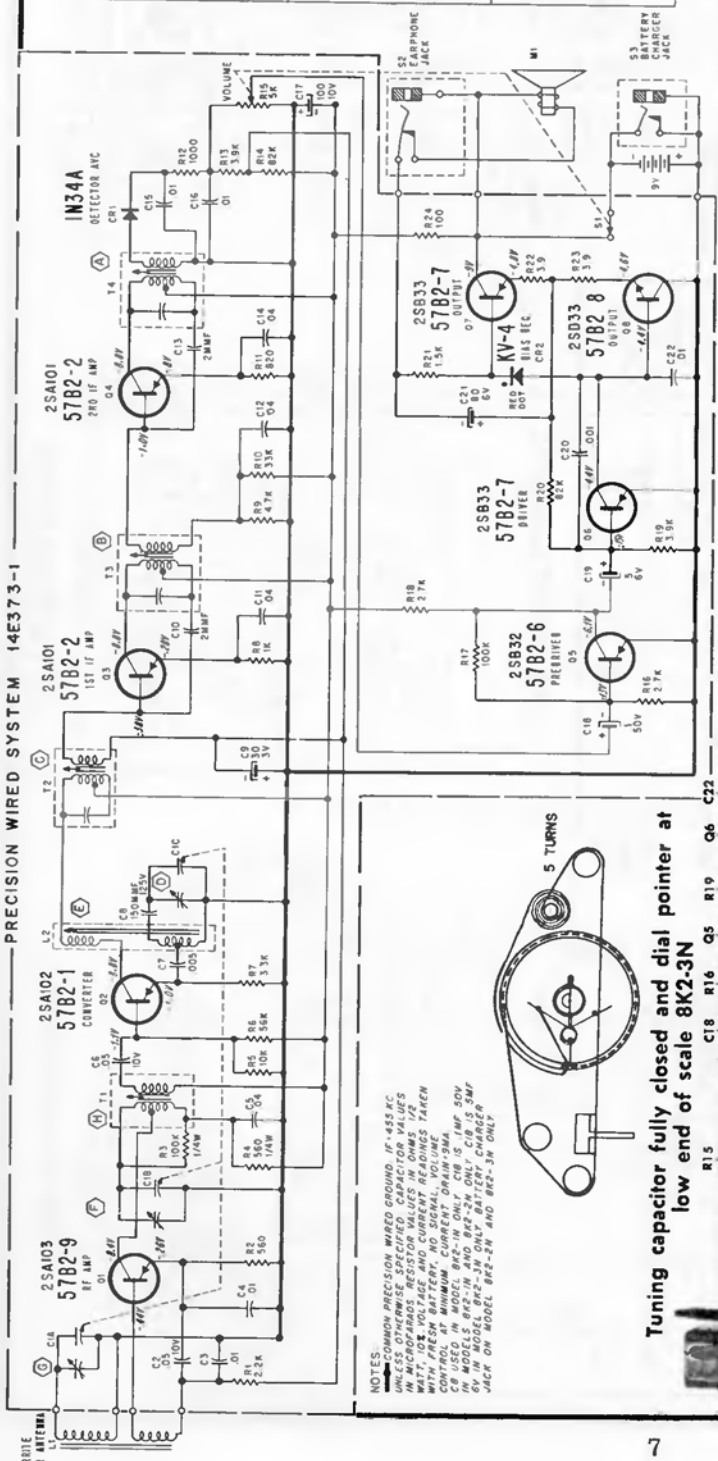

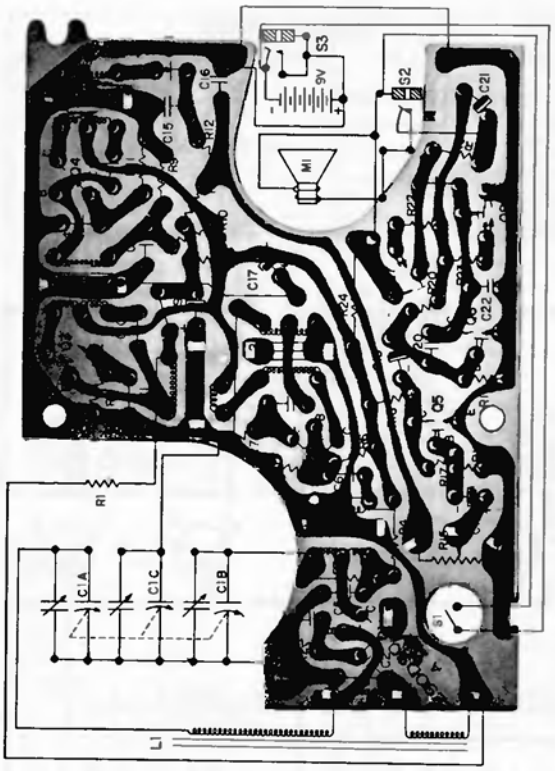

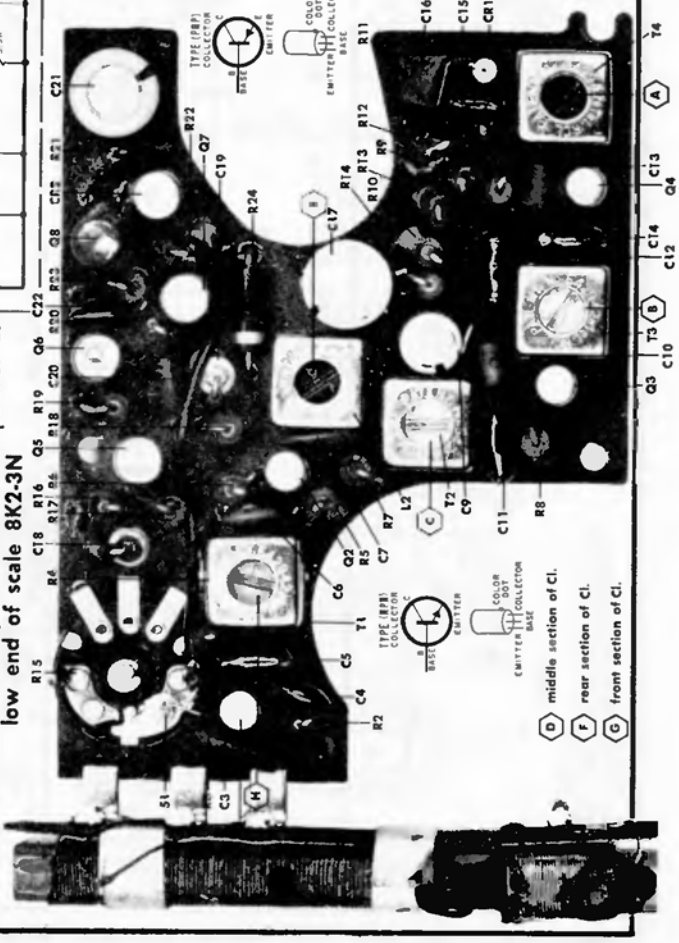

MODEL CHART			
MODEL	COLOR	CHASSIS	RECORD CHANGER
Y8157	Beige & White	8N2	RC7M5G-66AW
Y8177	Brown		RC7M5F-67AW
Y8181	Black		
Y8201	Walnut		RC7M5F-67AW
Y8202	Mahogany		

Admiral

8N2 CHASSIS

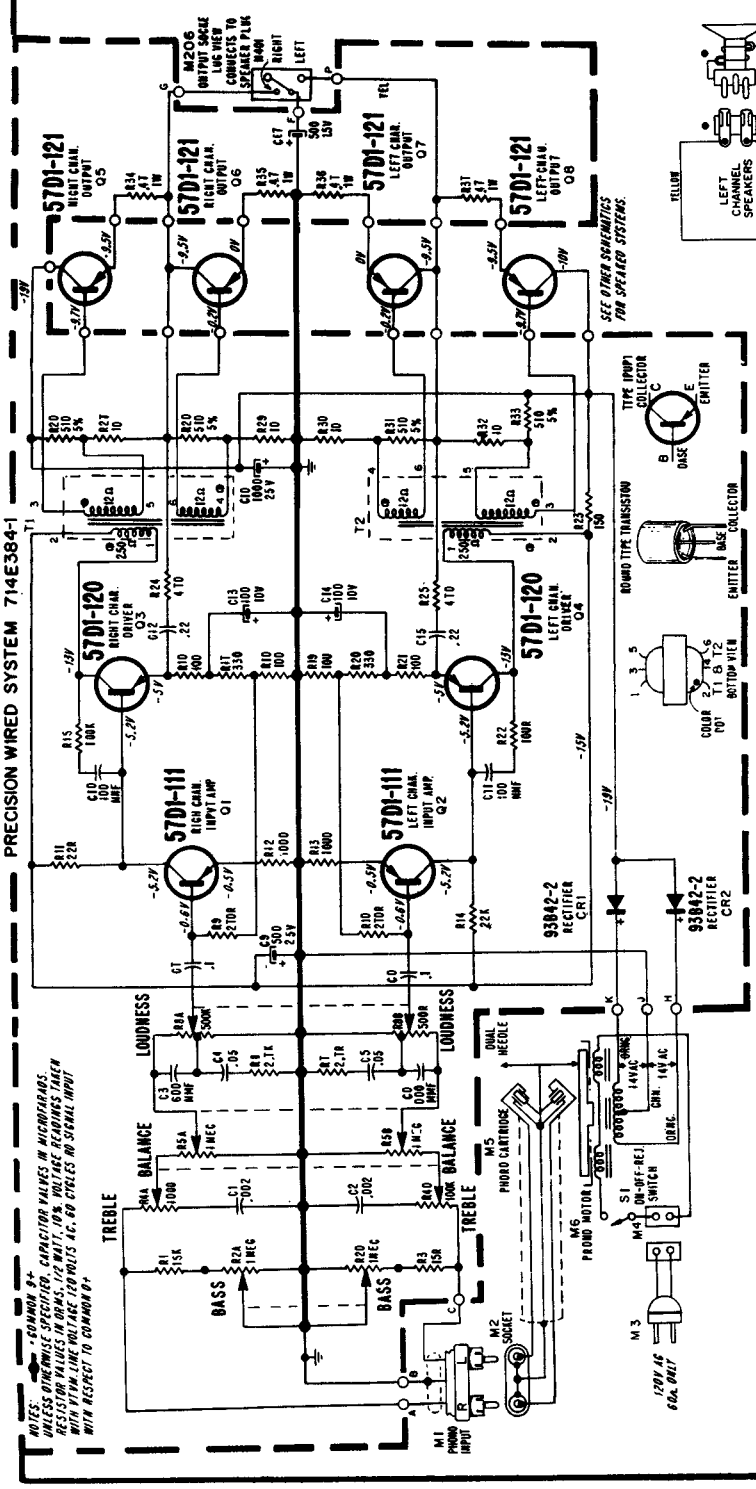

8N2 CHASSIS SCHEMATIC

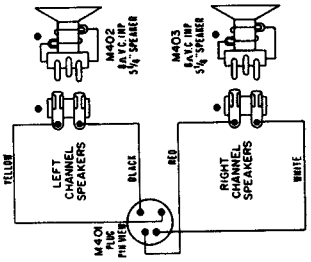

Y8157 SPEAKER WIRING

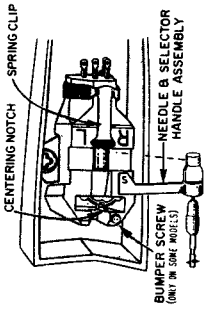

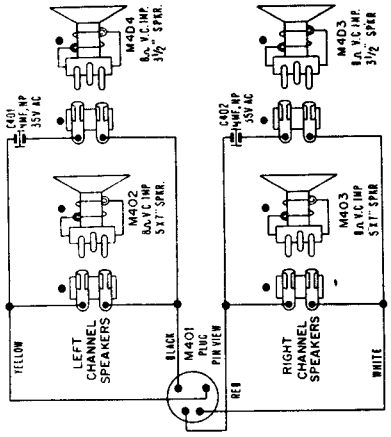

Y8177 SPEAKER WIRING

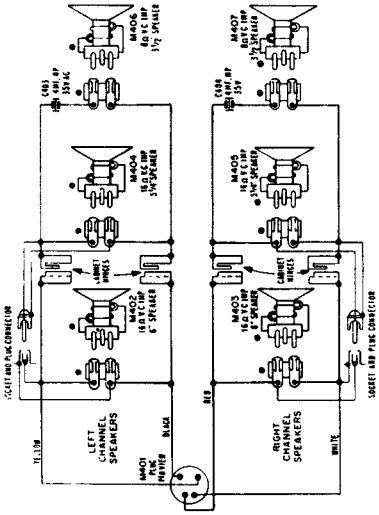

Y8181 SPEAKER WIRING

Admiral

Chassis 2K1, 2K1A, 2K1B,
Models Y5009, Y5017, Y5027

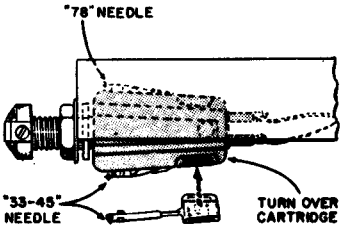

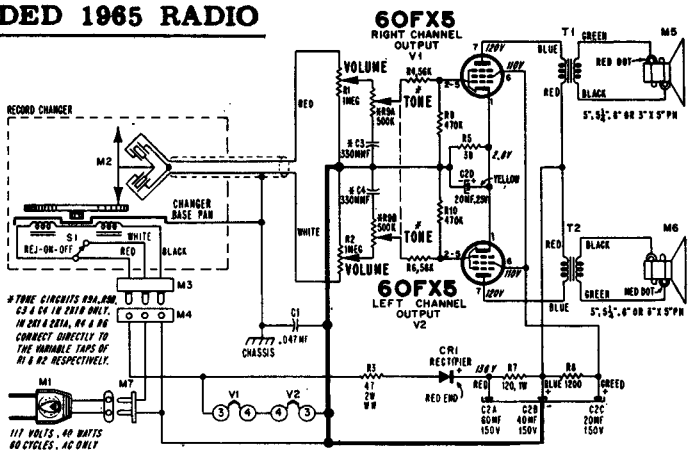

ADMIRAL Chassis 3J2A, Models Y6001, Y6002, Y6021, Y6022

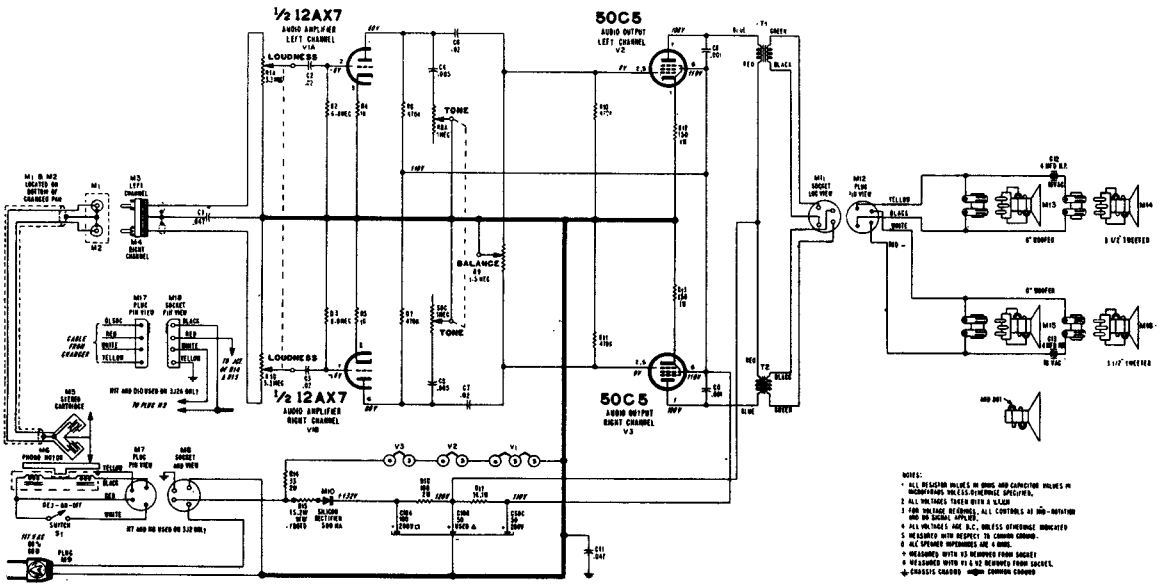

ADMIRAL Chassis 3L2A, -B, Models Y5037, Y5097

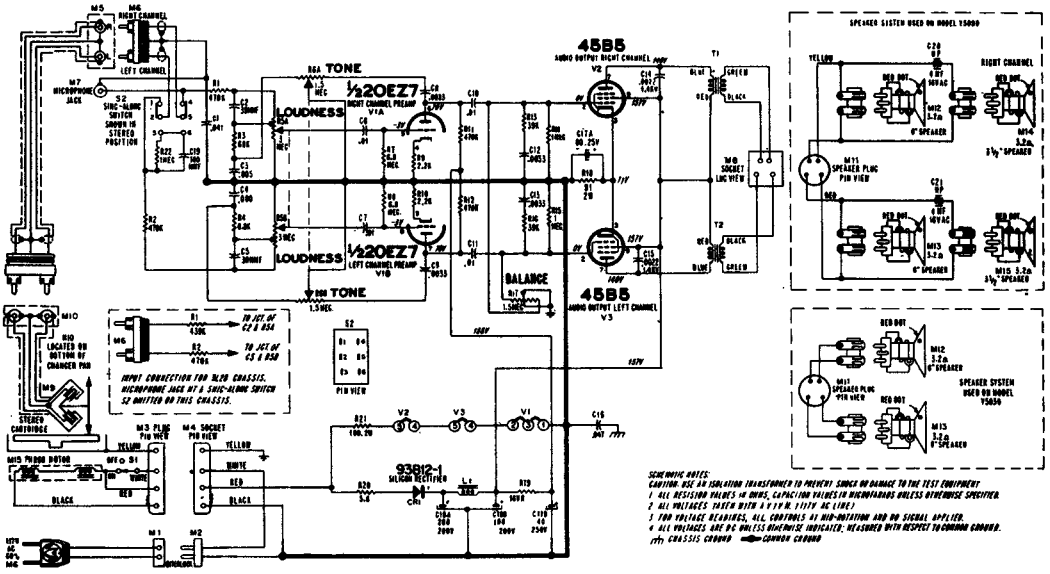

Admiral

Tuner 12A2 used in models listed at right. Diagram across pages 10 and 11. Material on related units is on page 12.

MODEL IDENTIFICATION CHART

MODEL	FINISH	CHASSIS
Y8601	Walnut	12A2,4C4 & 8D3
Y8615	Maple	RC7K4K-73AN
Y8629	Cherry	

Y701A IDENTIFICATION CHART

MODEL	TYPE	CHASSIS
TM731	Tuner	12A2
PA741	Preamplifier	4C4
PS751	Power Unit	8D3
SS1501	Speakers	2 Enclosures
RP771	Record Changer	RC7K4K-73AN
Y701A	Complete Unit	All Above.

12A2 TUNER SCHEMATIC

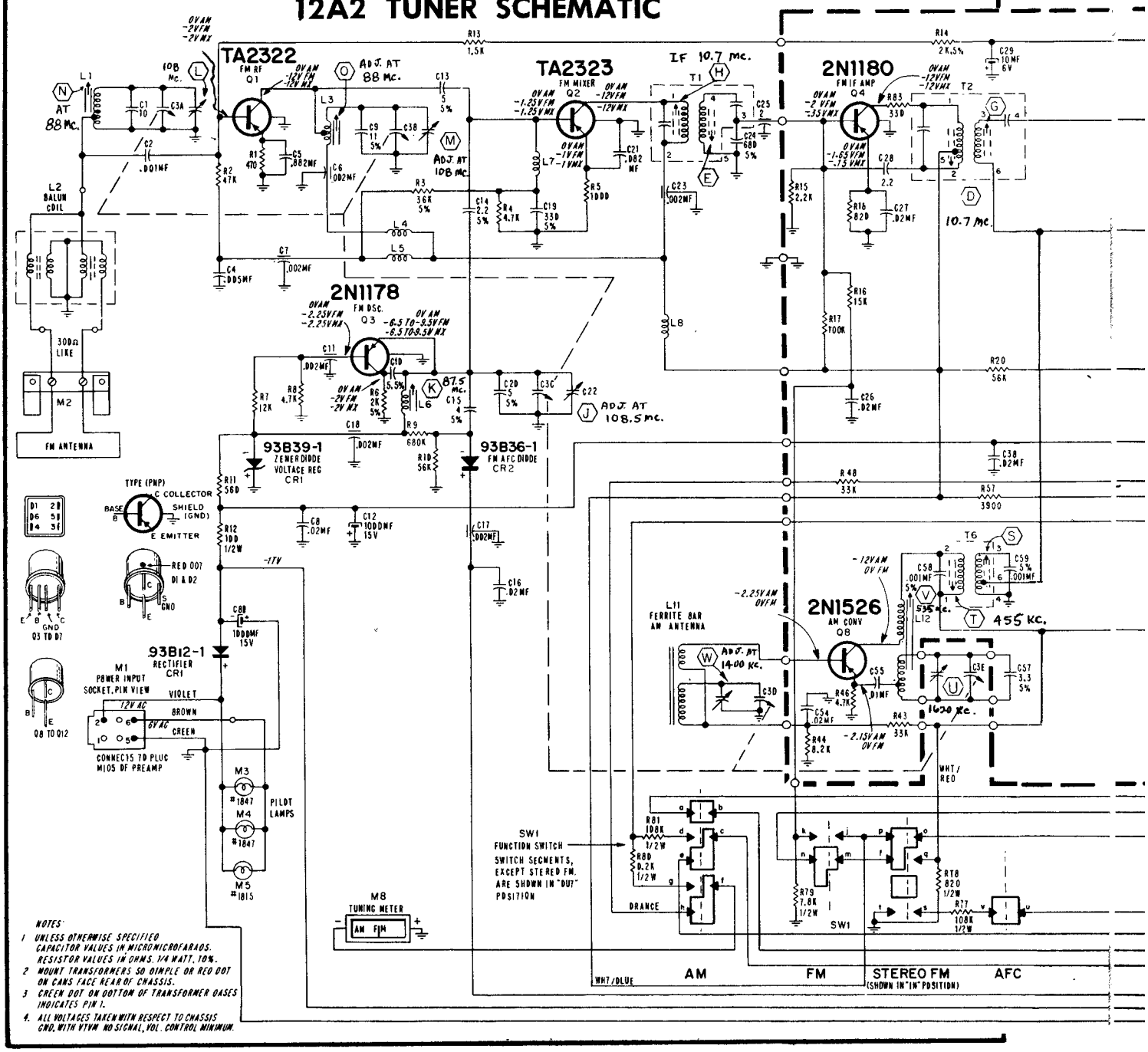

Admiral

TUNER 12A2

(Continued from page 10)

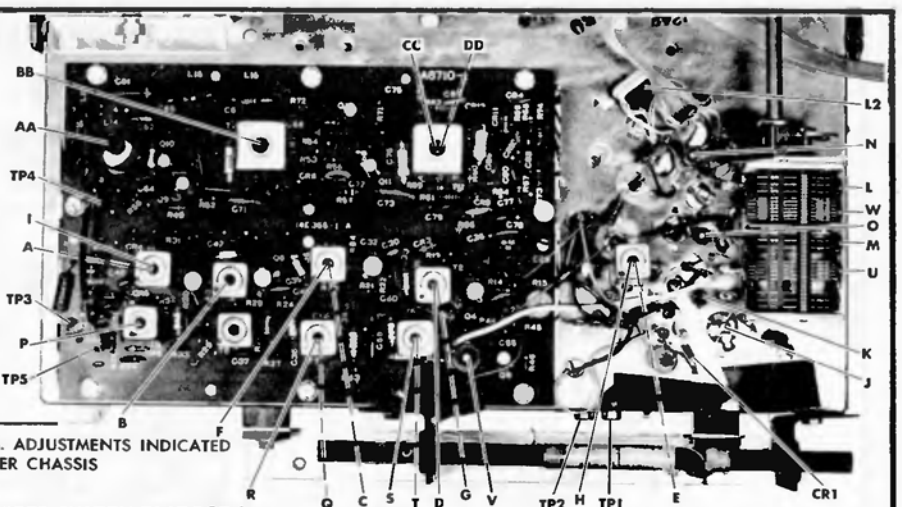

TOP VIEW OF 12A2 TUNER CHASSIS. ADJUSTMENTS INDICATED BY DASHED LINES ARE UNDER CHASSIS

PRECISION WIRED SYSTEM 714E365-1

ADMIRAL 4C4 Preamplifier and 8D3 Power Unit (For models see page 10)

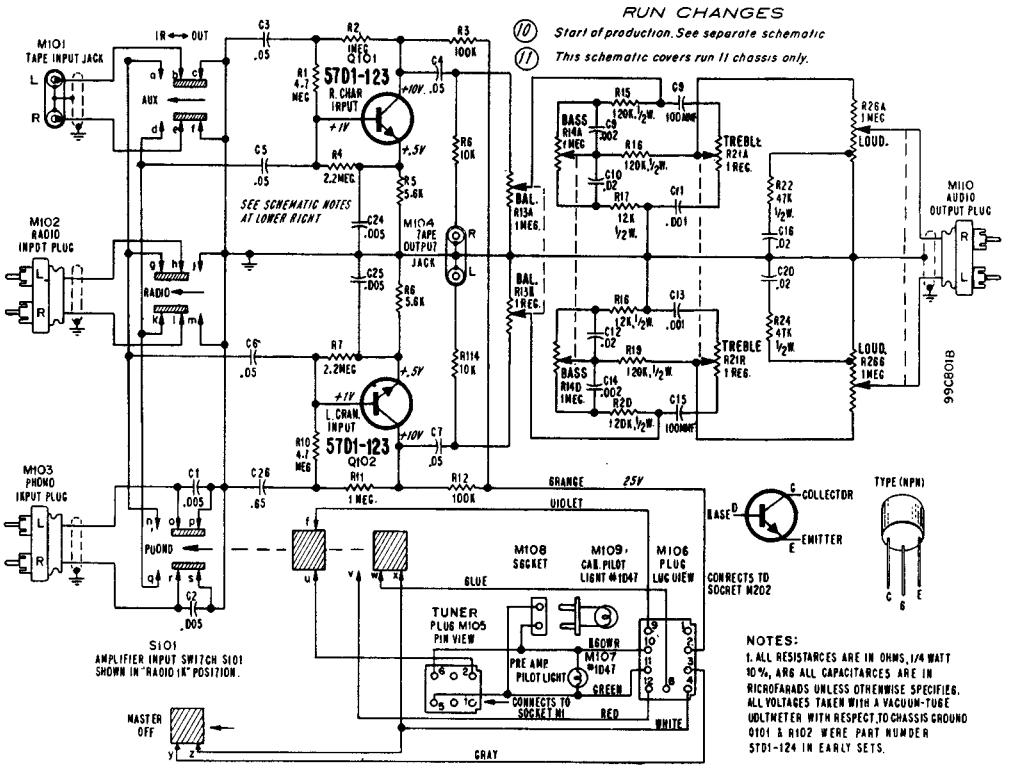

4C4 RUN 11 PREAMPLIFIER SCHEMATIC

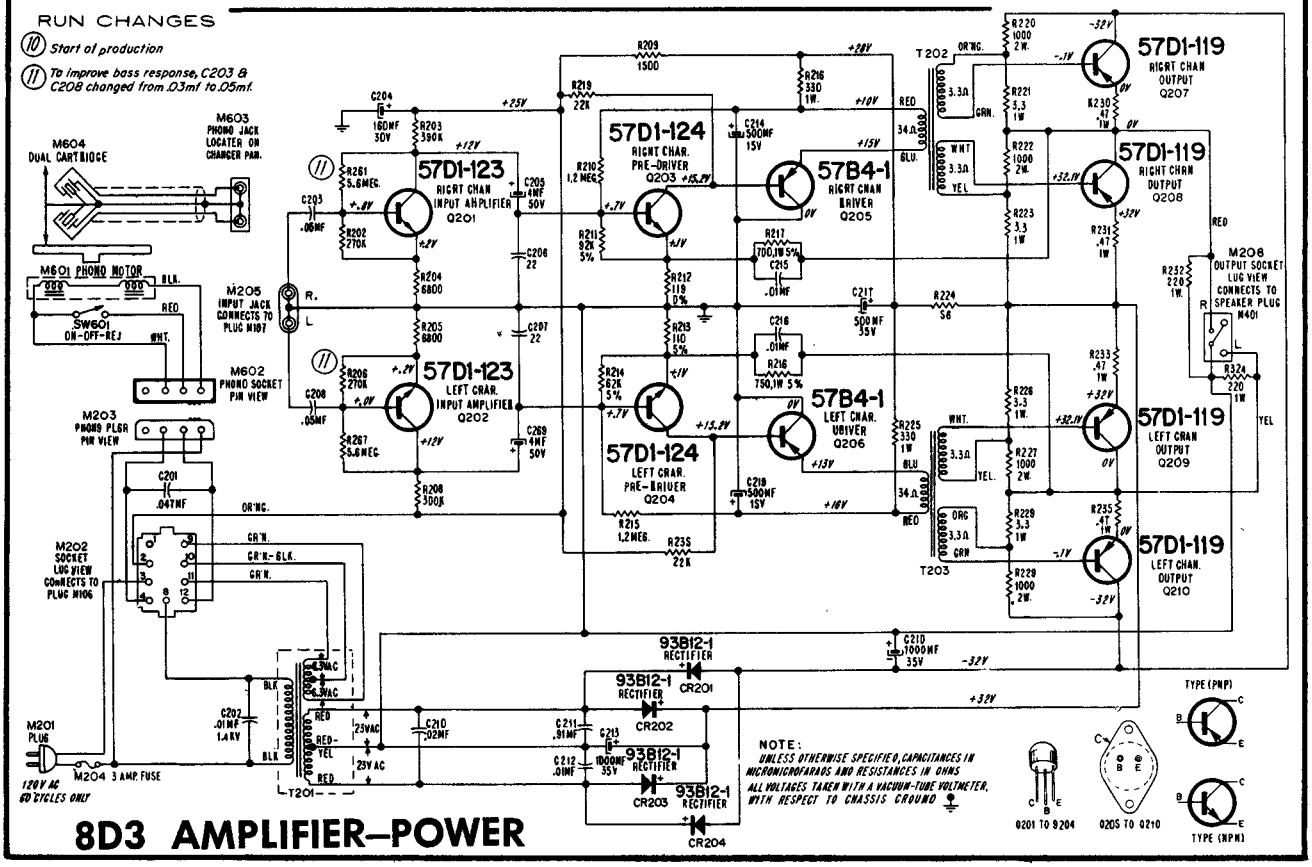

8D3 AMPLIFIER–POWER

Arvin

MODELS 13R07, 13R08
CODE 1.86401

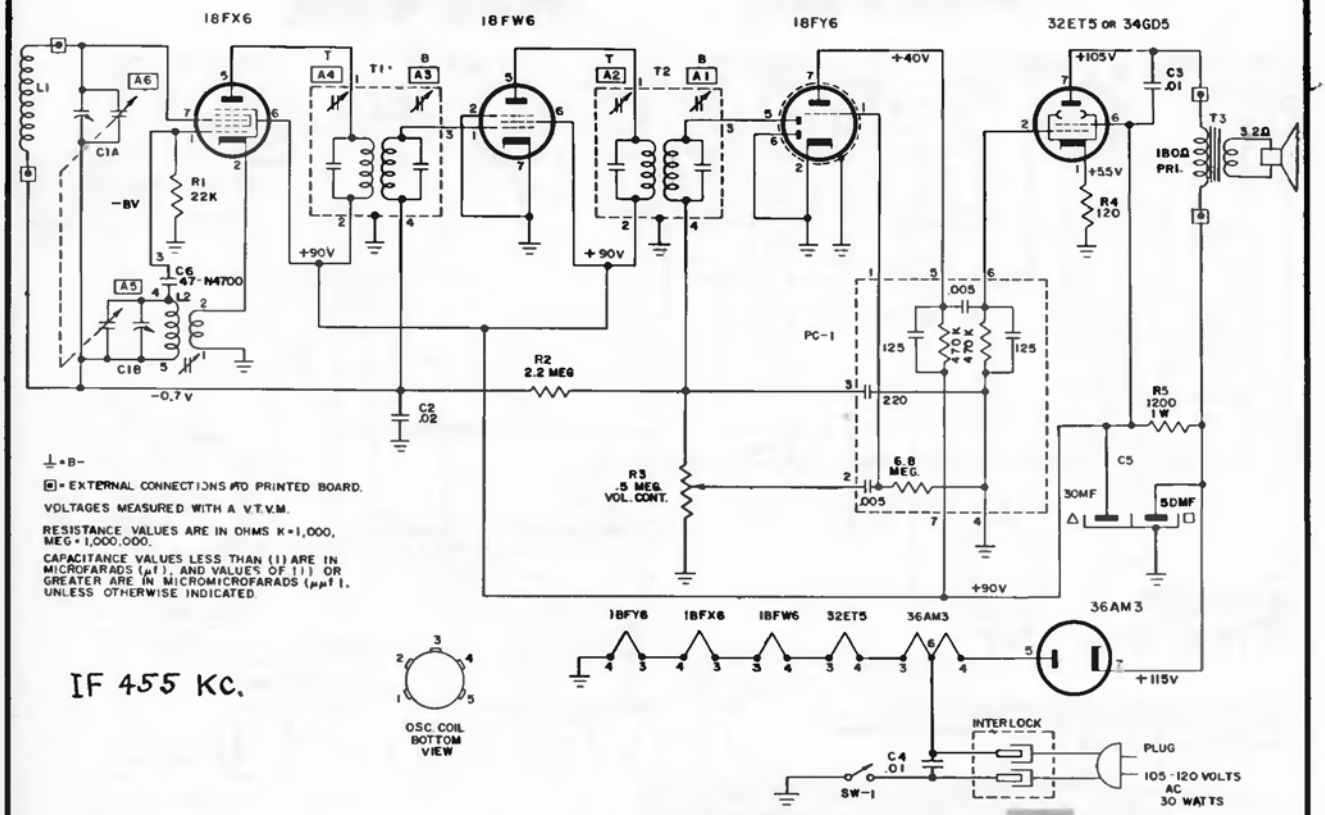

IF 455 KC.

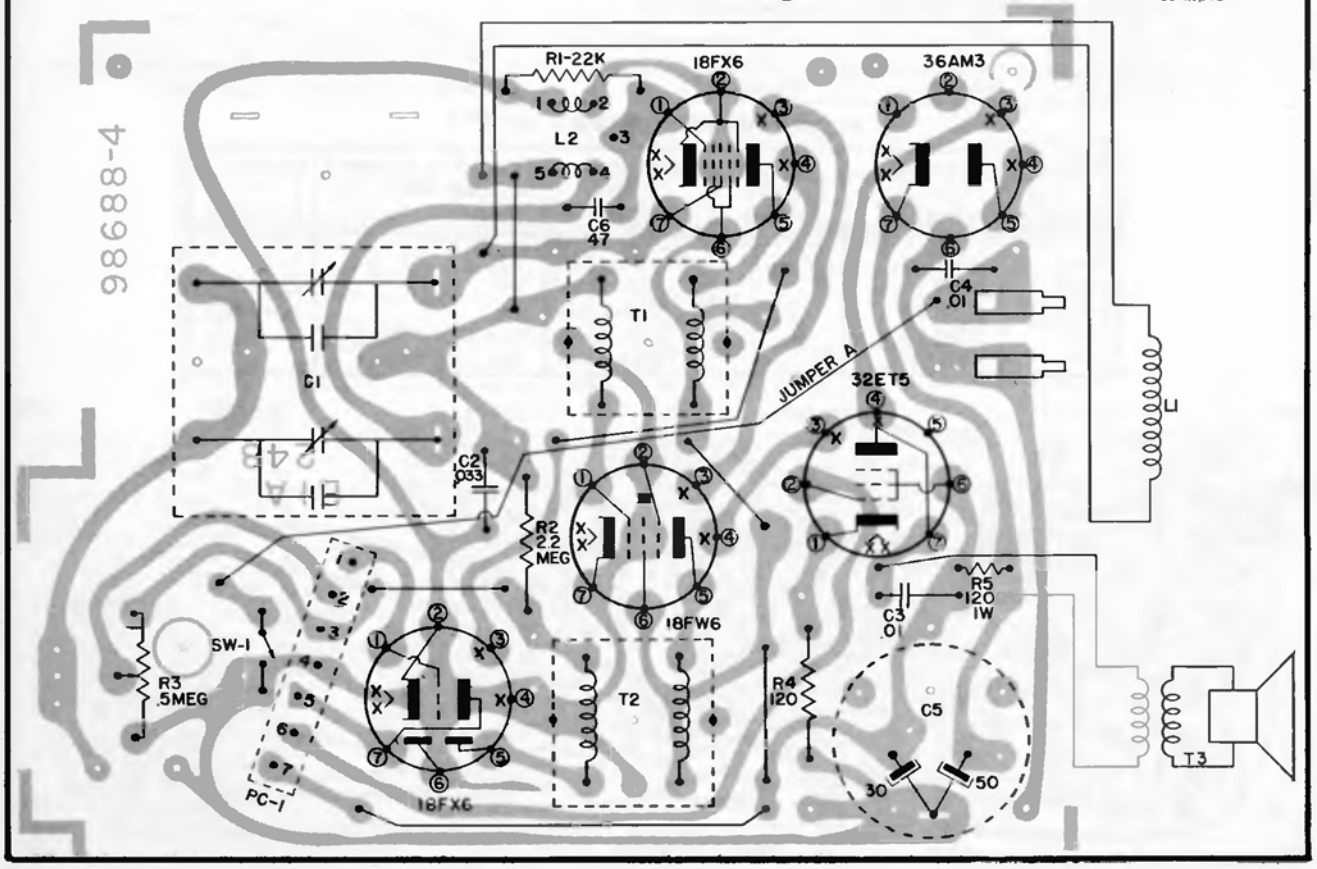

Arvin

CODE 1.81001
MODEL 14R18

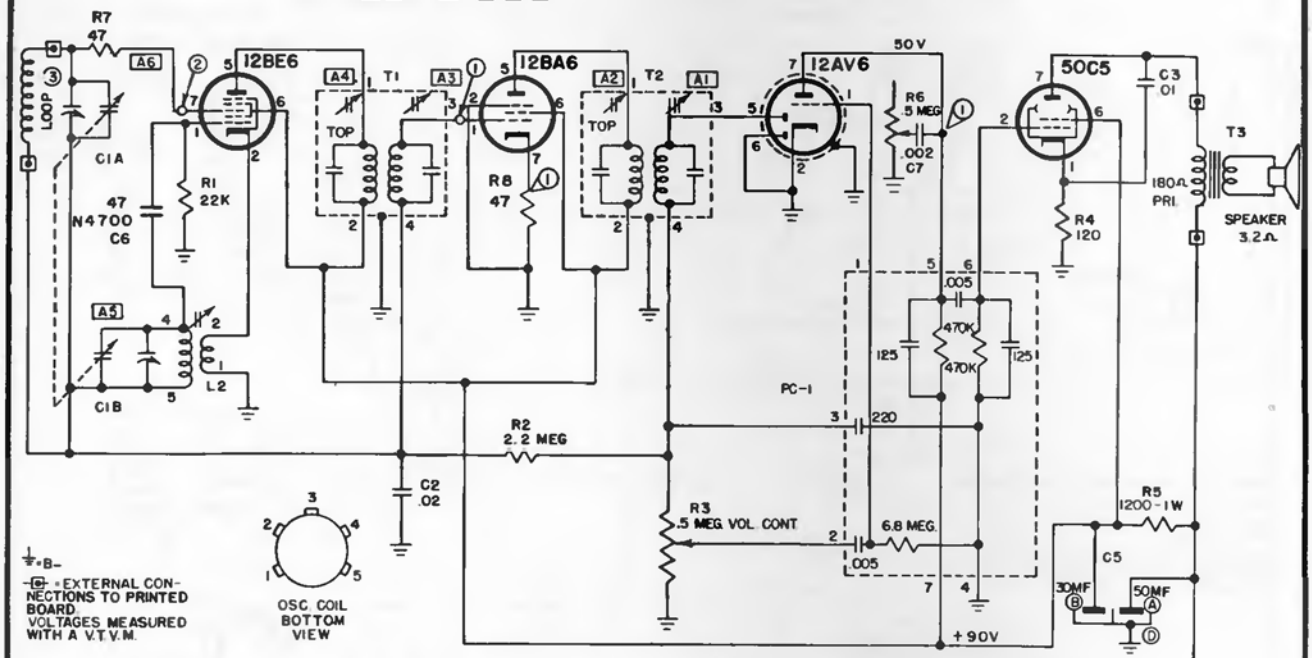

RESISTANCE VALUES ARE IN OHMS K=1,000, MEG=1,000,000.
CAPACITANCE VALUES LESS THAN 1) ARE IN MICROFARADS (μf), AND VALUES OF (1) OR GREATER ARE IN MICROMICROFARADS (μμf), UNLESS OTHERWISE INDICATED.

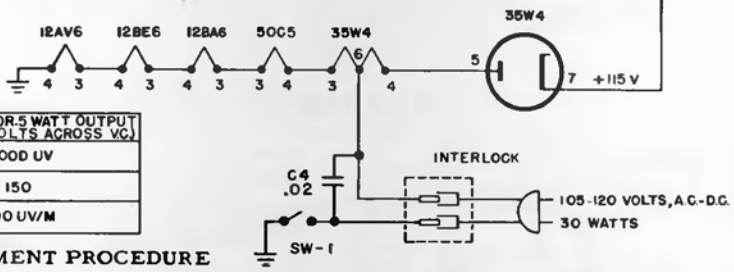

APPROXIMATE SENSITIVITIES

CIRCUIT POINT	DUMMY TO GENERATOR	INPUT FOR .05 WATT OUTPUT (0.4 VOLTS ACROSS VC)	INPUT FOR .5 WATT OUTPUT (1.0 VOLTS ACROSS VC)
1	.05μf AT 455 KC	2000 UV	5000 UV
2	.05μf AT 455 KC	60	150
3	STANDARD LOOP AT 1000 KC	200 UV/M	500 UV/M

ALIGNMENT PROCEDURE

Position of Variable	Frequency of Generator	Dummy Antenna	Generator Output Connection	Trimmers Adjusted in Order Shown for Maximum Output	Function of Trimmer
Open	455 Kc	.05 μ fd	Pin 7 12BE6	A1, A2, A3, A4	I.F.
Open	1640 Kc		Test Loop	A5	Oscillator
1400	1400 Kc		Test Loop	A6	Antenna
1000	1000 Kc		Test Loop	Fan C1A Plates	
600	600 Kc		Test Loop	Fan C1A Plates	

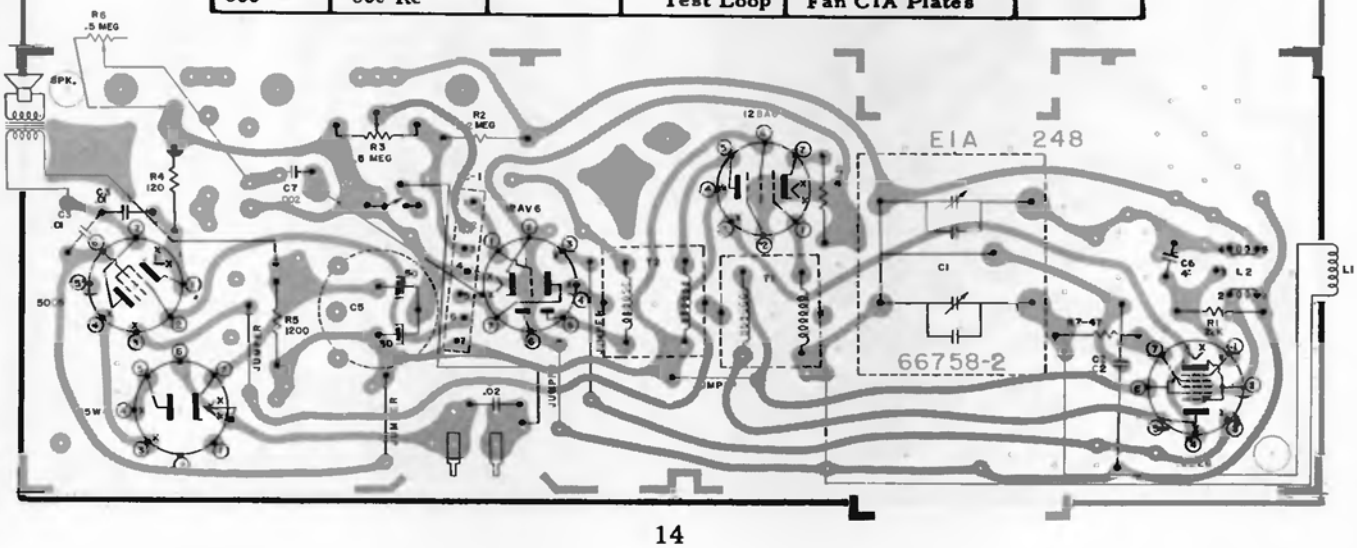

Arvin®

CODE 1. 81501
MODEL 14R68

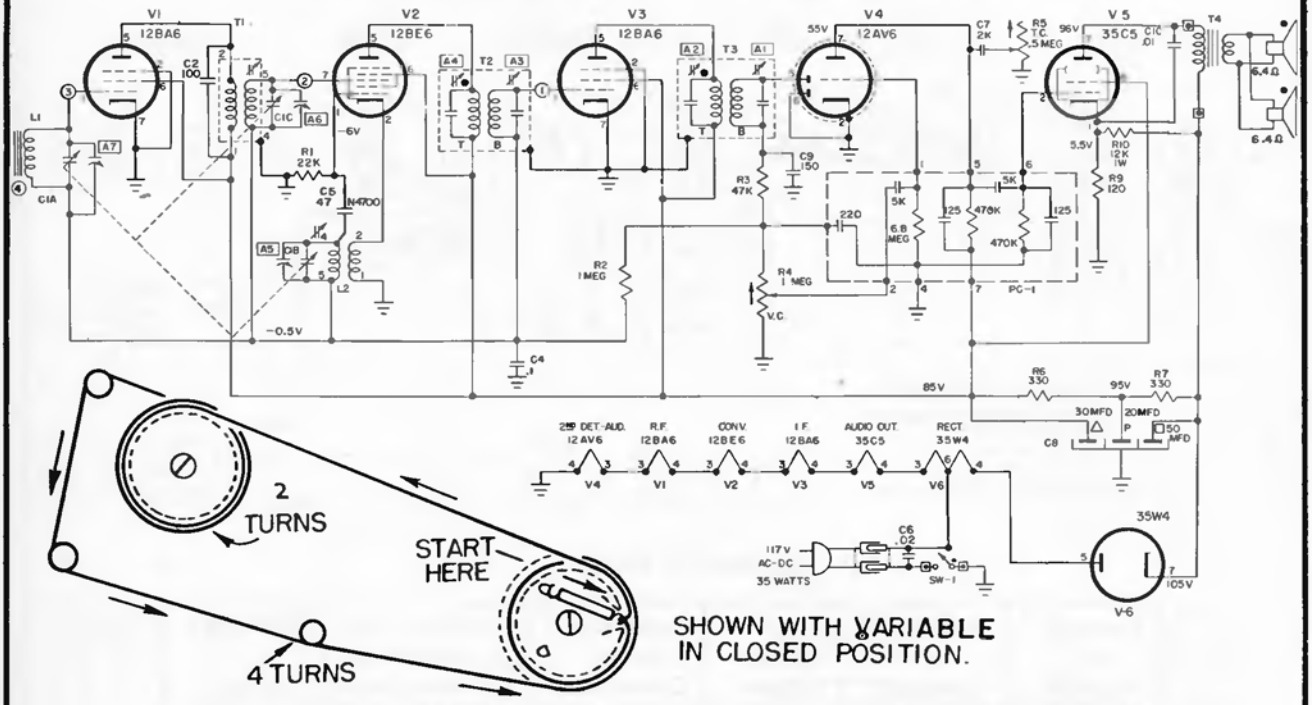

⏚ -B-

⊡ +EXTERNAL CONNECTIONS TO PRINTED BOARD.

VOLTAGES MEASURED TO B- WITH A VTVM ± 20%, NO SIGNAL.

RESISTANCE VALUES ARE IN OHMS K = 1,000, MEG = 1,000,000. CAPACITANCE VALUES LESS THAN (1) ARE IN MICROFARADS (μf), AND VALUES OF (1) OR GREATER ARE IN MICROMICROFARADS (μμf), UNLESS OTHERWISE INDICATED.

BOTTOM VIEW
T1 & L2

APPROXIMATE SENSITIVITIES

CIRCUIT POINT	DUMMY TO GENERATOR	INPUT FOR .05 WATT OUTPUT (0.4 VOLTS ACROSS V.C.)	INPUT FOR .5 WATT OUTPUT (1.26 VOLTS ACROSS V.C.)
1	.05μf AT 455 KC	3200 UV	8000 UV
2	.05μf AT 455 KC	160 UV	400 UV
3	.05μf AT 1000 KC	50 UV	90 UV
4	STANDARD LOOP AT 1000 KC	75 UV/M	125 UV/M

ALIGNMENT PROCEDURE

Position of Variable	Frequency of Generator	Dummy Antenna	Generator Output Connection	Trimmers Adjusted in Order Shown for Maximum Output	Function of Trimmer
Open	455 Kc	.05 μ fd	Pin 7 12BE6	A1, A2, A3, A4	I.F.
Open	1640 Kc		Test Loop	A5	Oscillator
1400	1400 Kc		Test Loop	A6	Antenna
1000	1000 Kc		Test Loop	Fan C1A Plates	
600	600 Kc		Test Loop	Fan C1A Plates	

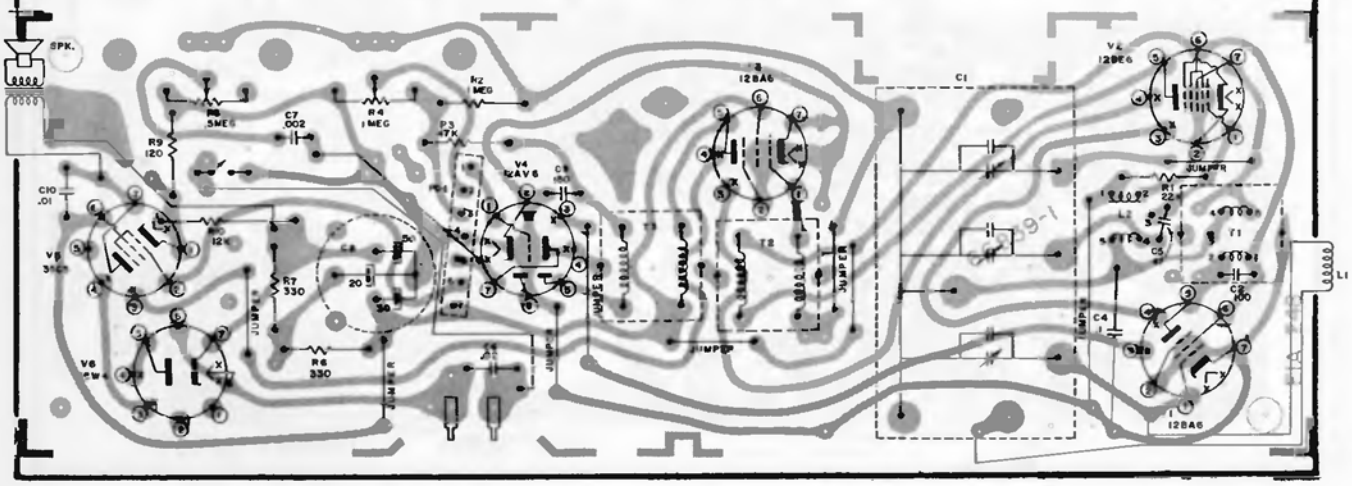

Arvin

CODE 1. 82001
MODEL 15R75

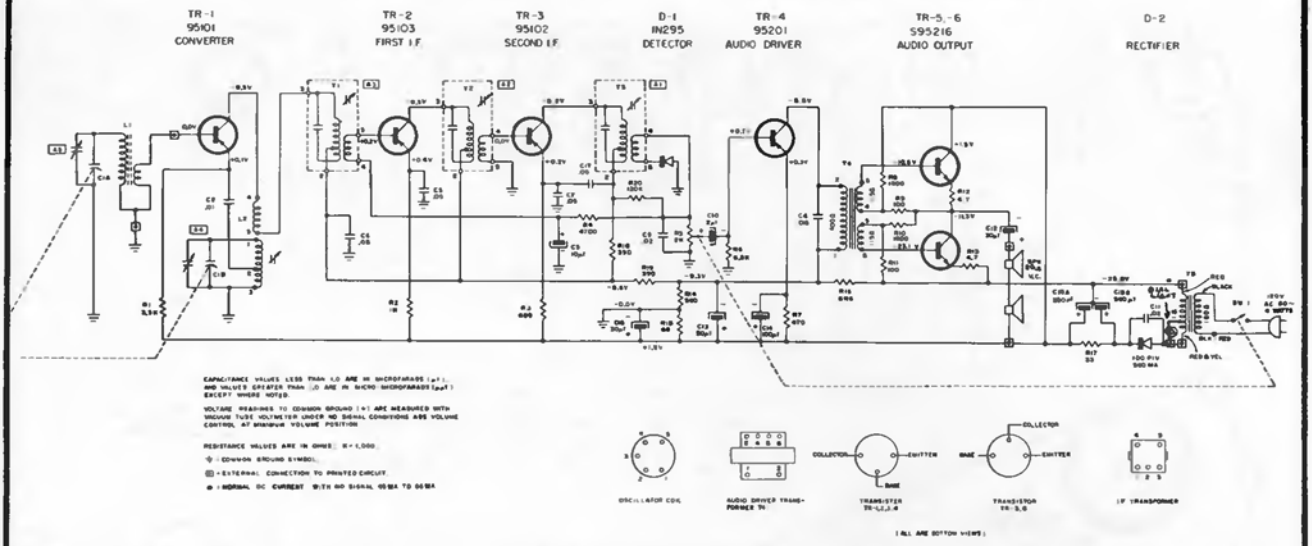

ALIGNMENT DATA

Position of Variable	Frequency of Generator	Dummy Antenna	Generator Output Connection	Trimmer Adj. in order shown for Max. Output	Functions of Trimmer
Open	455 Kc	.05 mf.	C1A	A1 (Top of T3)	I.F.
				A2 (Top of T2)	I.F.
				A3 (Top of T1)	I.F.
Open	1640 Kc		*Test Loop	A4	Oscillator
1400 Kc	1400 Kc		*Test Loop	A5	Antenna
600 Kc	600 Kc		*Test Loop	Check Point	

*Three (3) turns of wire 6" in diameter placed about one foot from the receiver antenna.

The alignment procedure should be repeated in the original order for greatest accuracy. Always keep the output from the signal generator at its lowest possible value to make the AVC action of the receiver ineffective.

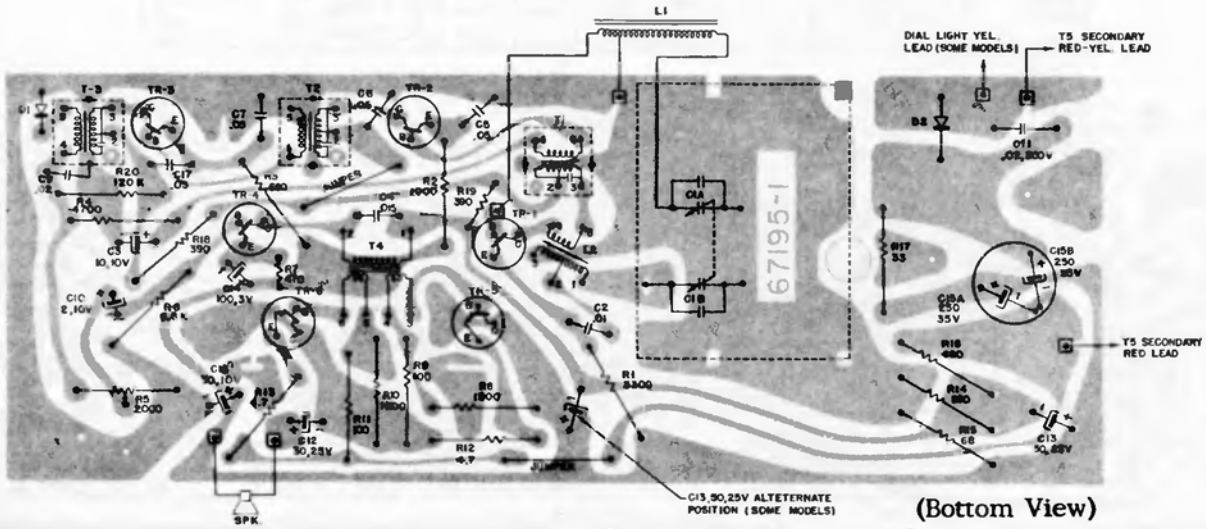

(Bottom View)

Arvin

CODE 1. 81601
MODEL 64R38

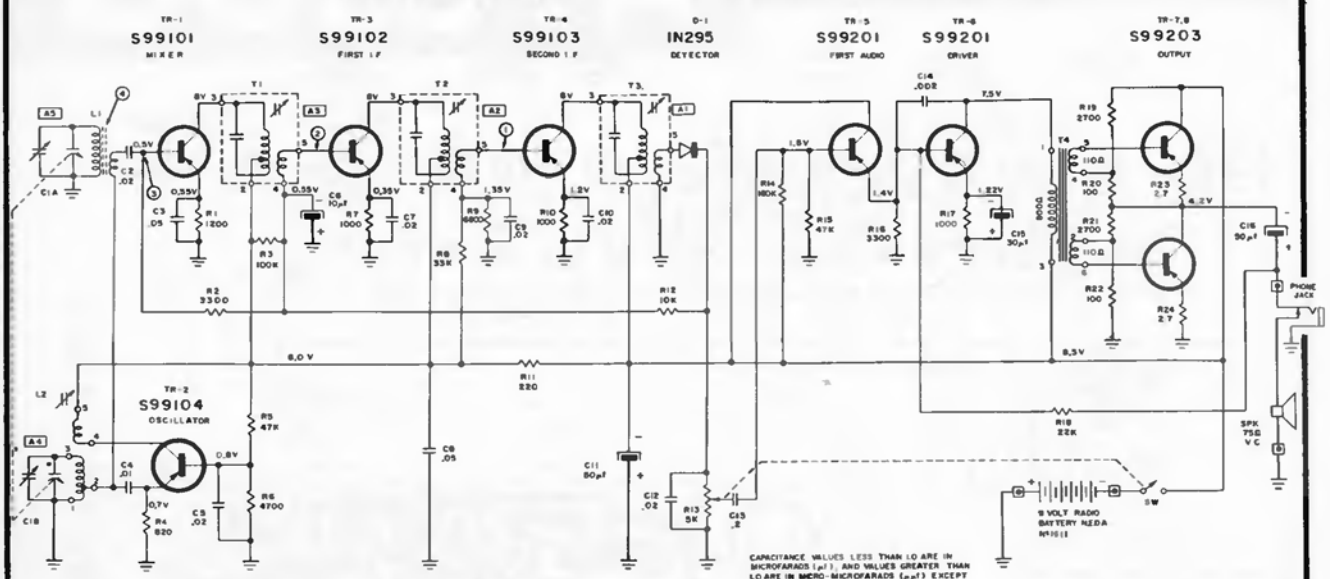

SIGNAL TEST POINTS	TEST FREQUENCY	SERIES CAPACITOR TO GENERATOR	INPUT FOR 5 M W OUTPUT (.6V ACROSS 75Ω)
①	455 KC	.05μf	500 μV
②	455 KC	.05μf	25 μV
③	455 KC	.05μf	2 μV
④	1000 KC	STANDARD LOOP	200 μ V/M

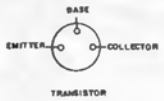

CAPACITANCE VALUES LESS THAN 1.0 ARE IN MICROFARADS (μf), AND VALUES GREATER THAN 1.0 ARE IN MICRO-MICROFARADS (μμf) EXCEPT WHERE NOTED.

VOLTAGE READINGS TO COMMON GROUND ARE MEASURED WITH VACUUM TUBE VOLTMETER UNDER NO SIGNAL CONDITIONS WITH TUNING CAPACITOR CLOSED AND VOLUME CONTROL AT MAXIMUM CLOCKWISE ROTATION.

RESISTANCE VALUES ARE IN OHMS, K=1000.

⏚ = COMMON GROUND SYMBOL.

▭ = EXTERNAL CONNECTION TO PRINTED CIRCUIT

TOTAL BATTERY CURRENT DRAIN UNDER NO SIGNAL CONDITIONS, 8 TO 14 MA.

I.F. TRANSFORMER & OSCILLATOR COIL

DRIVER TRANSFORMER

(BOTTOM VIEWS)

ALIGNMENT PROCEDURE

Position of Variable	Generator Frequency	Dummy Antenna	Generator Connections	Trimmers Adj. in order shown for Max. Output	Function of Trimmer
Open	455 Kc	.05 μf	C1A	A1 (Top of T3)	I. F.
				A2 (Top of T2)	I. F.
				A3 (Top of T1)	I. F.
Open	1640 Kc		*Test Loop	A4	Oscillator
1400 Kc	1400 Kc		*Test Loop	A5	Antenna
600 Kc	600 Kc		*Test Loop	Check Point	

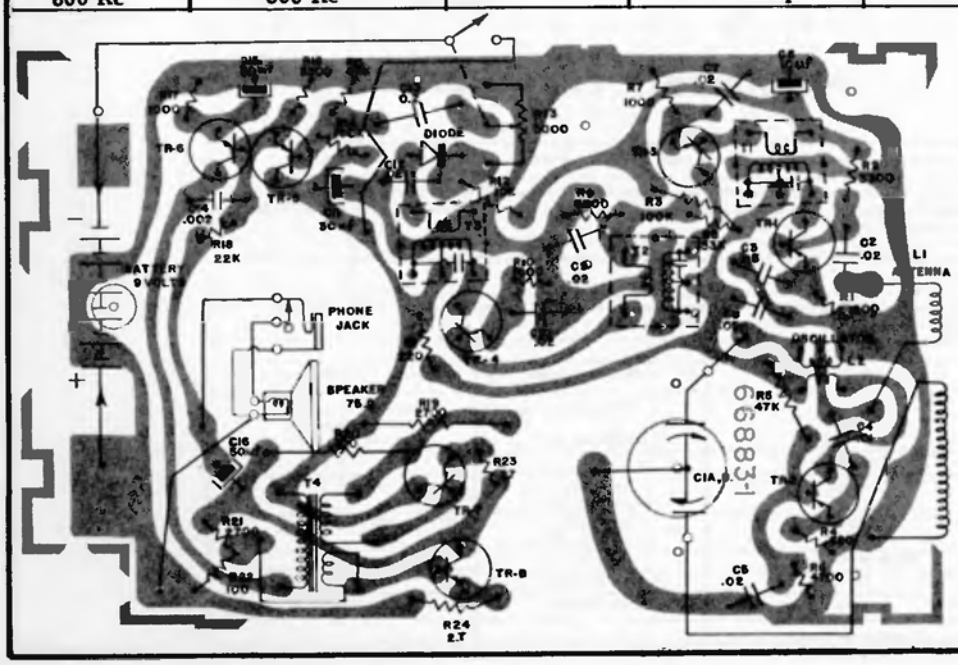

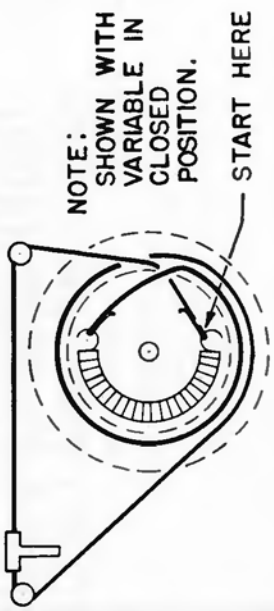

Arvin

CODE 1. 84701
MODEL 64R29

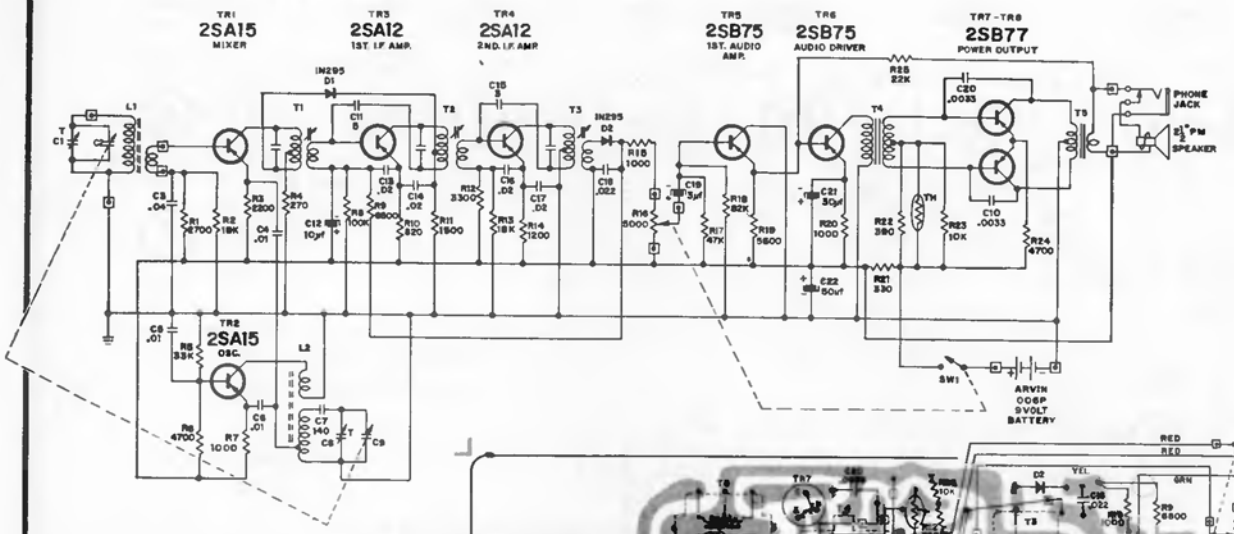

EXTERNAL CONNECTOR TO PRINTED CIRCUIT BOARD

RESISTANCE VALUES ARE IN OHMS; K=1000

CAPACITANCE VALUES LESS THAN 1.0 ARE IN MICROFARADS (μf) AND VALUES GREATER THAN 1.0 ARE IN MICRO-MICROFARADS (μμf) EXCEPT WHERE NOTED.

VOLTAGE READINGS TO COMMON GROUND (+) ARE MEASURED WITH VACUUM TUBE VOLTMETER UNDER NO SIGNAL CONDITIONS.

TOTAL BATTERY CURRENT DRAIN UNDER NO SIGNAL CONDITIONS IS 8 TO 12 MA.

Circuit Board Top View

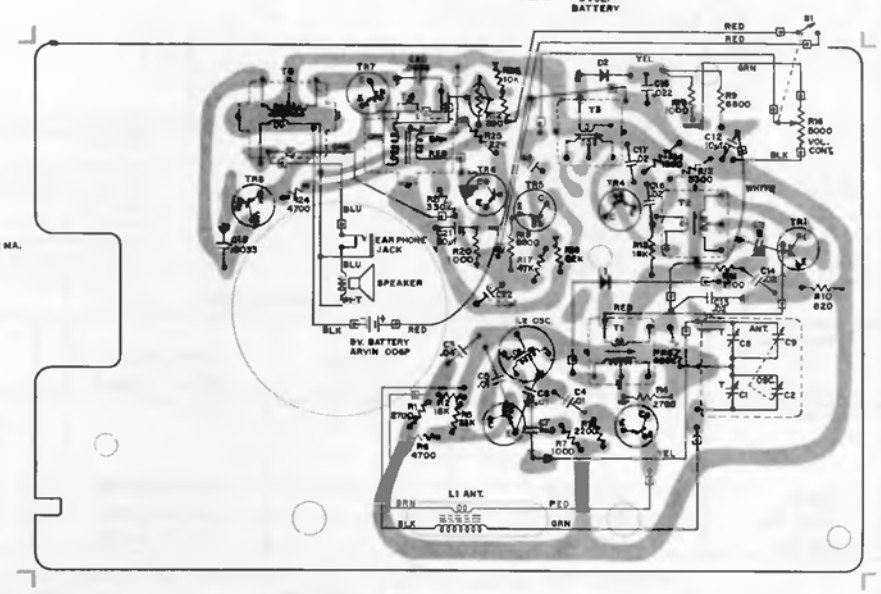

Alignment Procedure

1. A new 9V. Battery or equivalent power supply must be used. The no signal voltage must not be less than 8 volts.
2. Turn volume control to maximum. Connect output of a signal generator (modulated with 400c/s±30%) to a loop antenna (4 inch in diameter, looped 2 or 3 rounds). Connect the loop antenna to the ferrite-core antenna. Connect the ground terminal of the signal generator to the receiver chassis.
3. Connect a vacuum-tube voltmeter (with an AC 3V or less scale) to the earphone jack (positive side connected to negative side with an 8 resistor).
4. Make adjustments per the following table to gain maximum readings on voltmeter. During alignment, adjust output level of signal generator so that voltmeter reading will not exceed 0.5V at maximum.

Step	Generator Frequency	Position of Variable	Adjust -- for max. output
1 2 3	455 Kc	Quiet point at high freq. end	3rd I.F. Trans. T3 2nd I.F. Trans. T2 1st I.F. Trans. T1
4	Repeat steps 1, 2 and 3		
5	520 Kc	Quiet point at low freq. end	osc. coil L2
6	1,650 Kc	Quiet point at high freq. end	osc. trimmer C8
7	Repeat steps 5 and 6		
8	600 Kc	600 Kc signal	ant. L1 position
9	1,400 Kc	1,400 Kc signal	ant. trimmer C1
10	Repeat steps 8 and 9		

BULOVA

MODEL #S-912

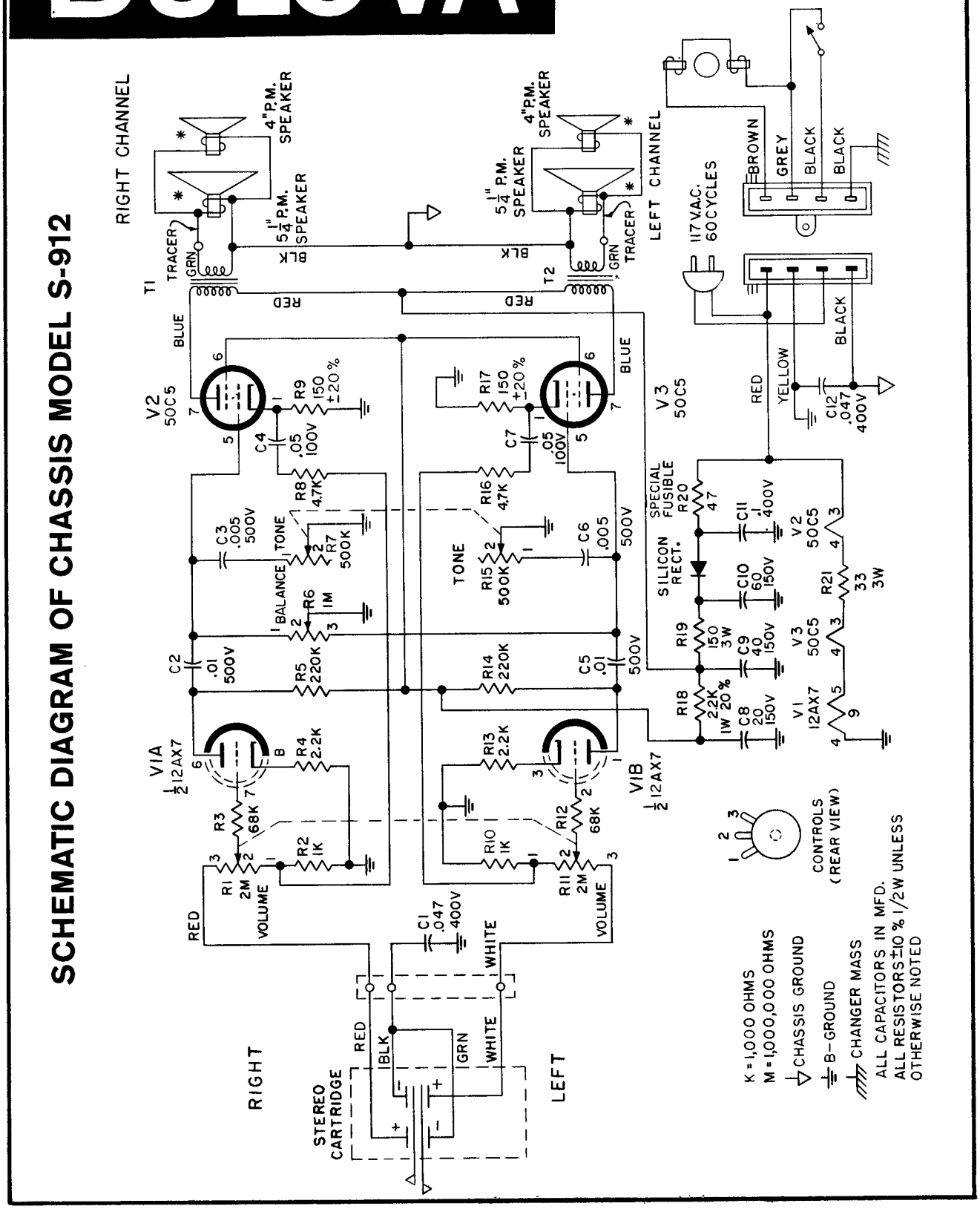

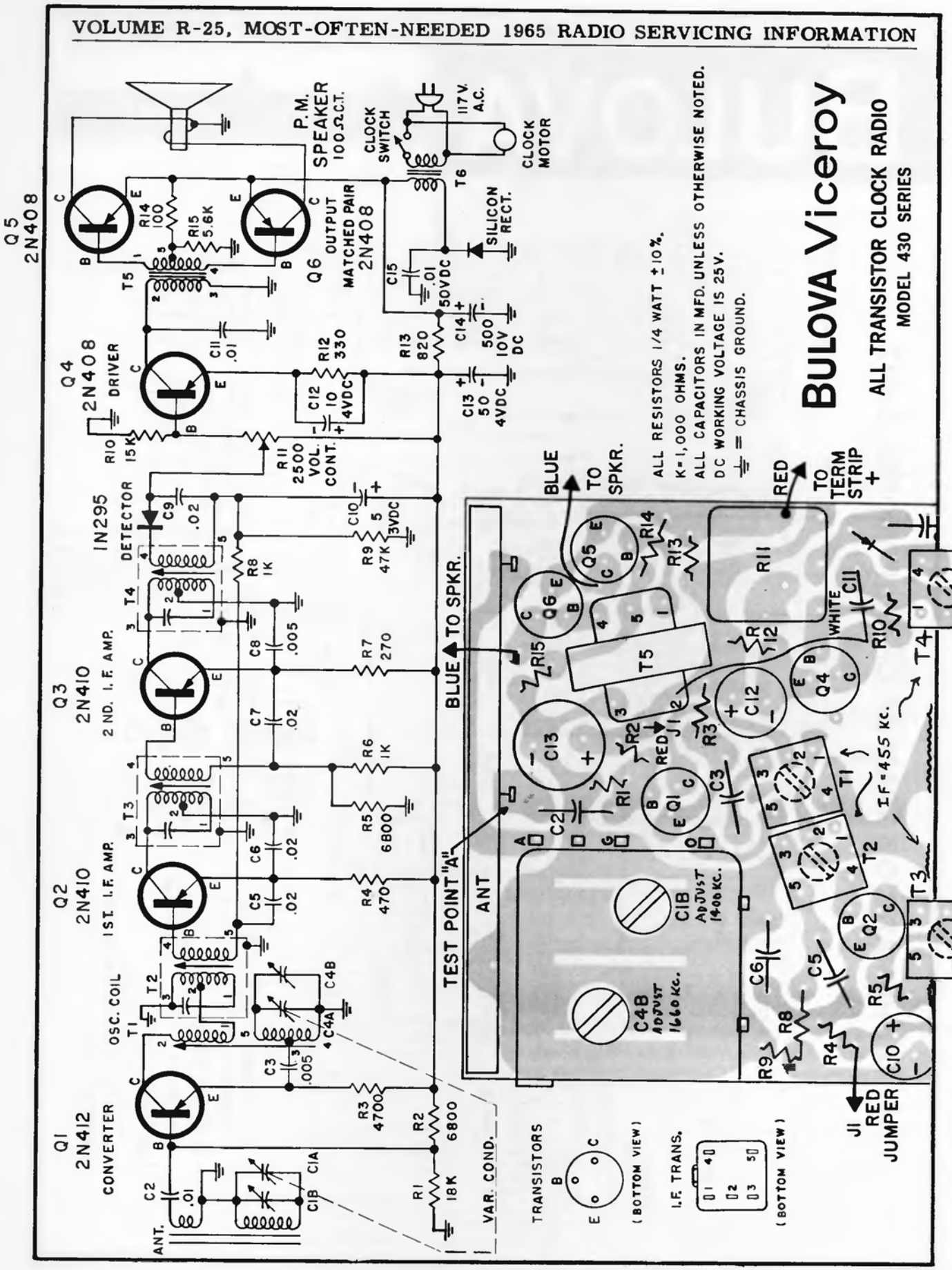
BULOVA Viceroy
ALL TRANSISTOR CLOCK RADIO
MODEL 430 SERIES
ALL RESISTORS 1/4 WATT ±10%.
K=1,000 OHMS.
ALL CAPACITORS IN MFD. UNLESS OTHERWISE NOTED.
DC WORKING VOLTAGE IS 25V.
= CHASSIS GROUND.
Q1 2N412 CONVERTER
Q2 2N410 1ST I.F. AMP.
Q3 2N410 2 ND. I.F. AMP.
Q4 2N408 DRIVER
Q5 2N408
Q6 OUTPUT MATCHED PAIR 2N408
1N295 DETECTOR
OSC. COIL
P.M. SPEAKER 100Ω C.T.
CLOCK SWITCH
117 V. A.C.
CLOCK MOTOR
SILICON RECT.
R11 2500 VOL. CONT.
BLUE TO SPKR.
RED TO TERM STRIP +
TEST POINT "A"
ANT
C1B ADJUST 1400 KC.
C4B ADJUST 1660 KC.
IF=455 KC.
J1 RED JUMPER
VAR. COND.
TRANSISTORS
(BOTTOM VIEW)
I.F. TRANS.
(BOTTOM VIEW)

DELMONICO

MODEL 120 MODEL 150

RADIO Tuning Range : FM 88–108MC AM 535–1605KC
Intermediate Frequency : FM 10.7MC AM 455KC
Antenna : FM Built-in folded dipole antenna
AM Built-in ferrite bar Antenna

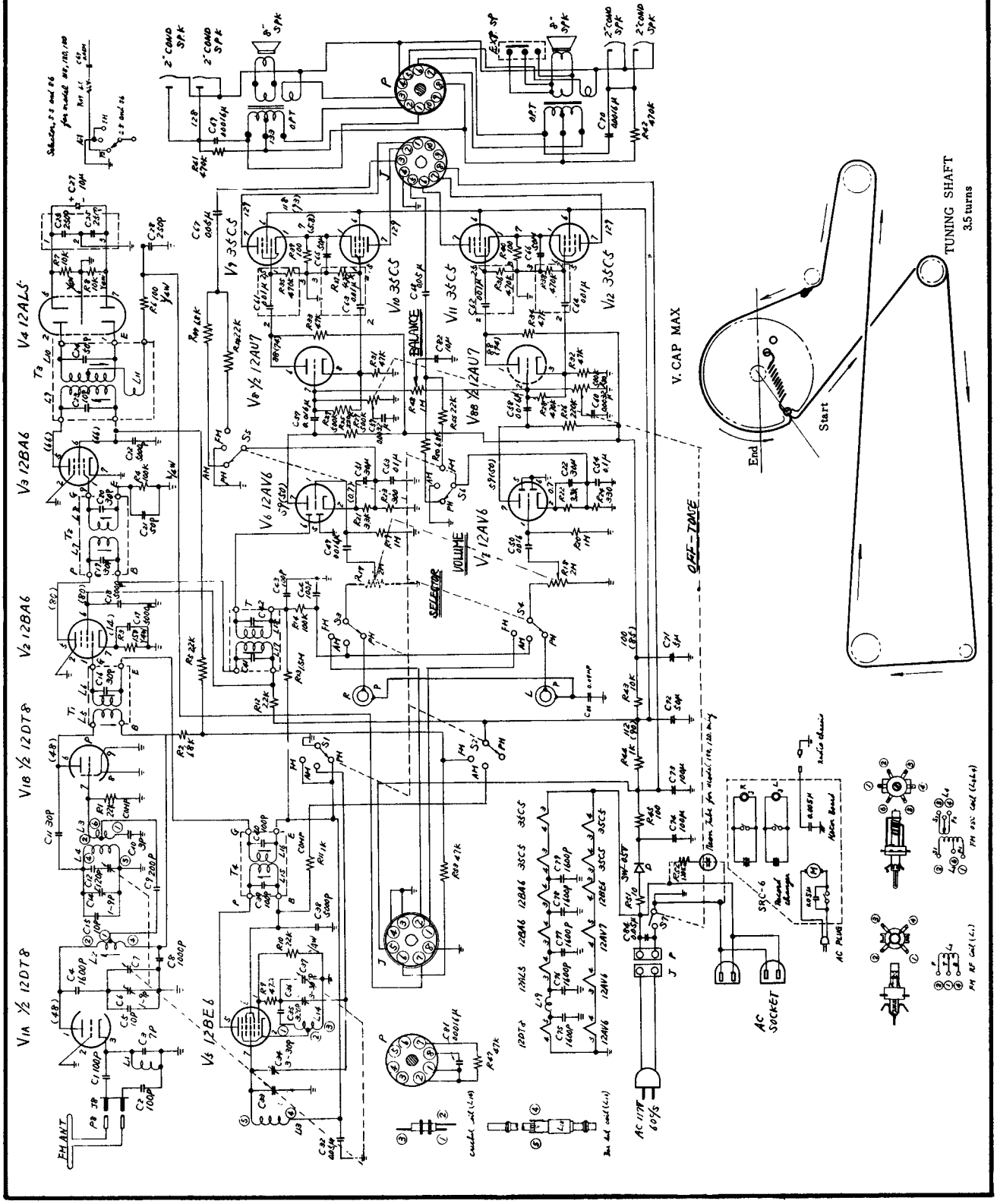

DELMONICO MODEL FMS-411

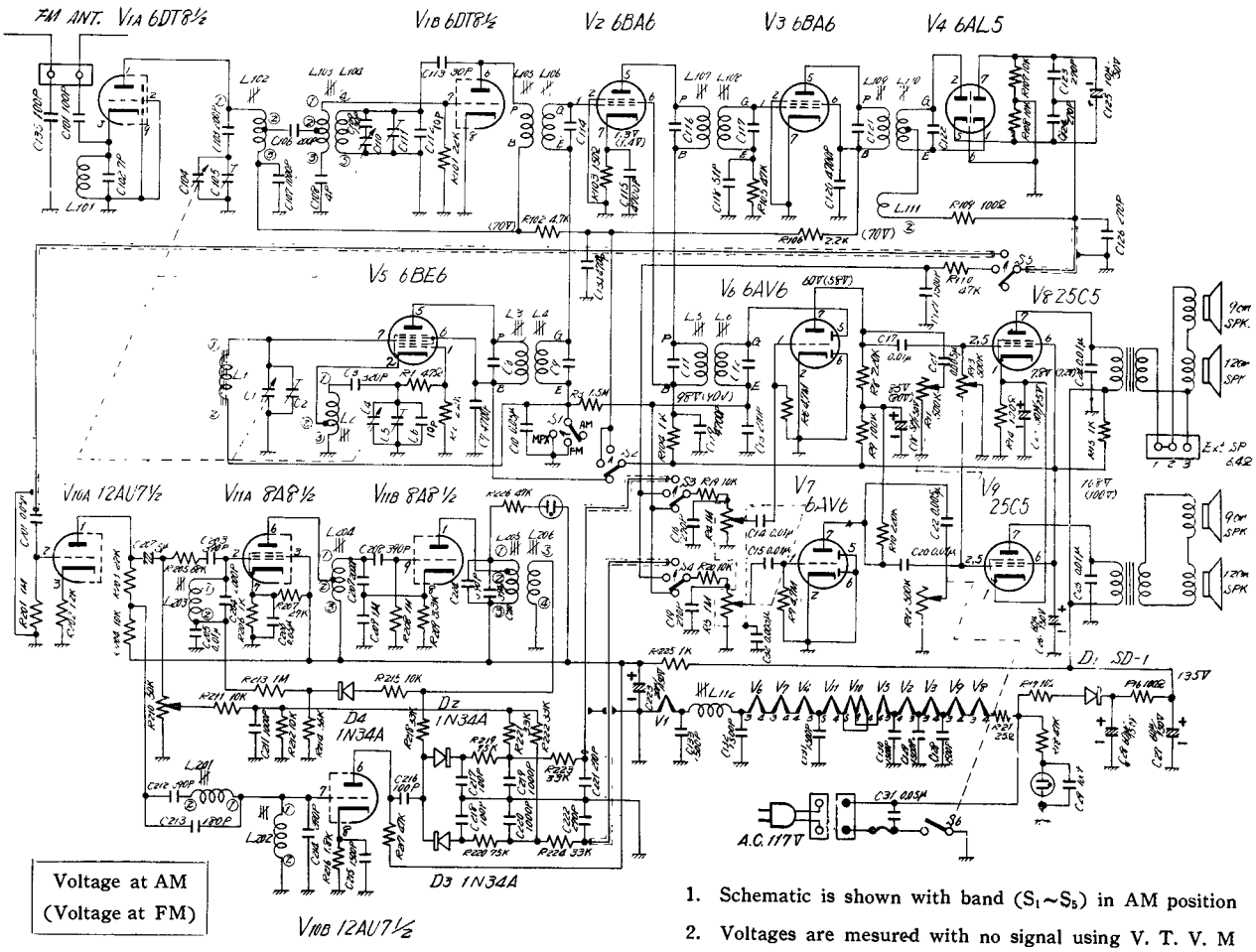

Voltage at AM
(Voltage at FM)

1. Schematic is shown with band ($S_1 \sim S_5$) in AM position
2. Voltages are mesured with no signal using V. T. V. M

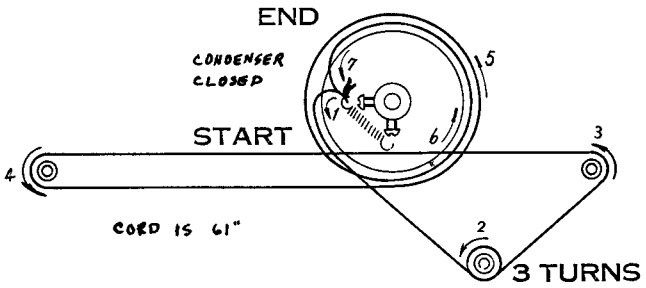

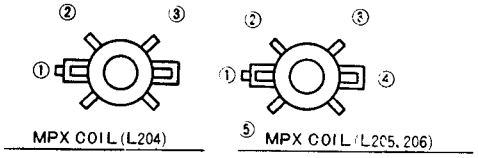

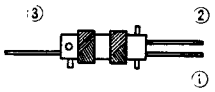

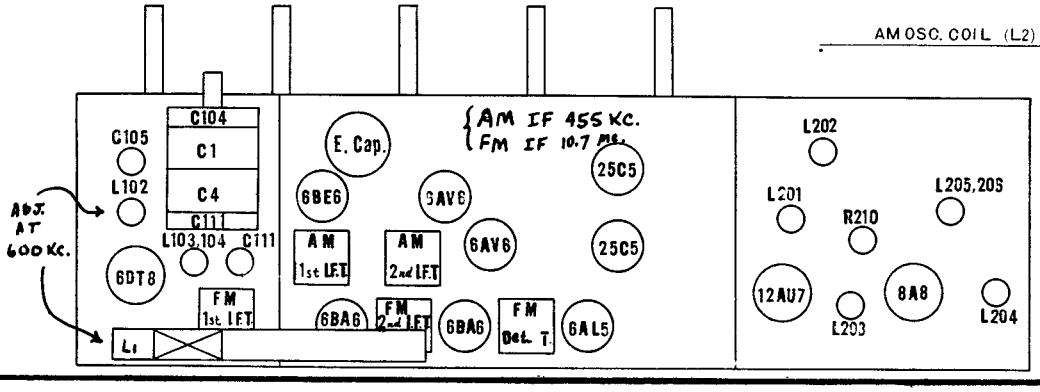

Emerson Radio

Chassis 120715, 120716, 120724
(material on pages 23 through 25)

MODEL AND CHASSIS CROSS-REFERENCE

MODEL NUMBER	AM/FM TUNER	STEREO AMPLIFIER
P-1925A	120715	120716
P-1927	120715	120716
P-1935	120724	120716
P-1938	120724	120716

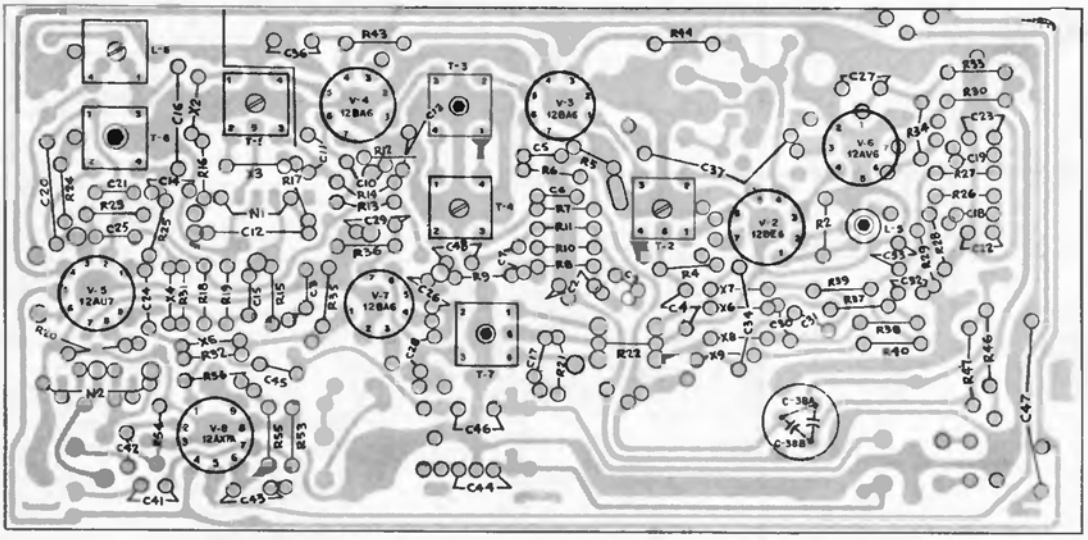

ETCHED PRINTED CIRCUIT, AM-FM TUNING CHASSIS (TOP VIEW)

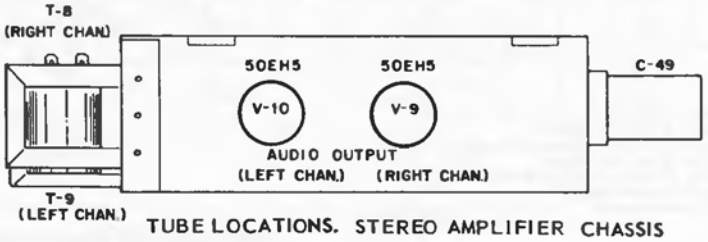

TUBE LOCATIONS. STEREO AMPLIFIER CHASSIS

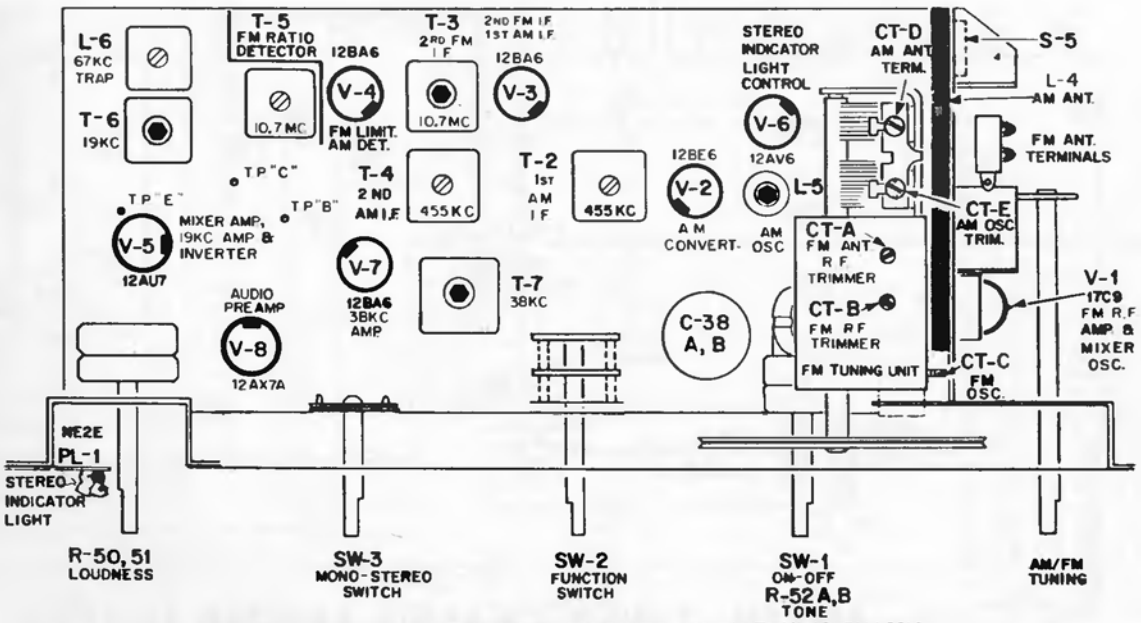

TUBE LOCATIONS AND ALIGNMENT POINTS, AM-FM TUNING CHASSIS.

EMERSON Chassis 120715, 120716, 120724, Schematic Diagram

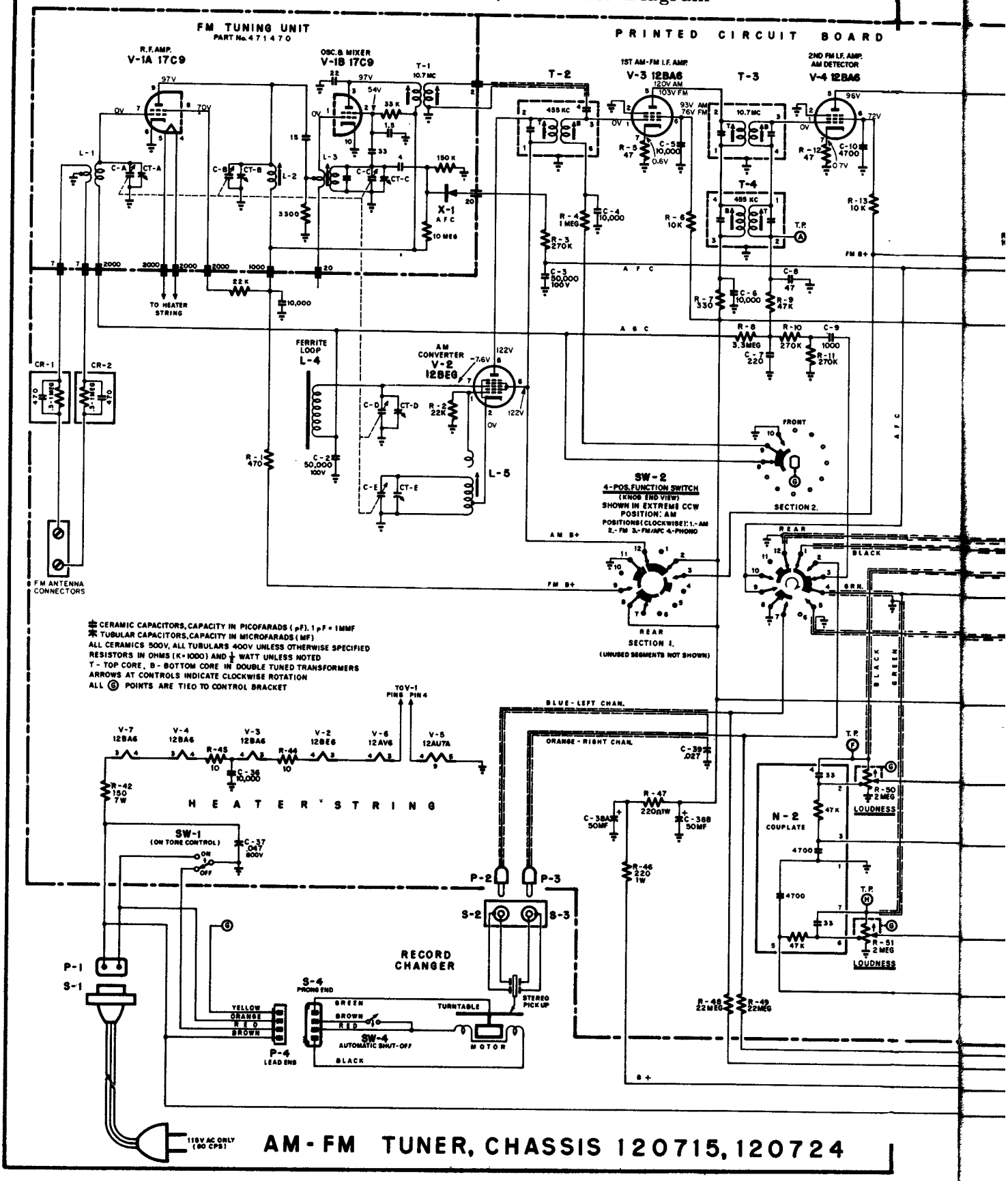

AM-FM TUNER, CHASSIS 120715, 120724

EMERSON Chassis 120715, 120716, 120724, Diagram, Continued

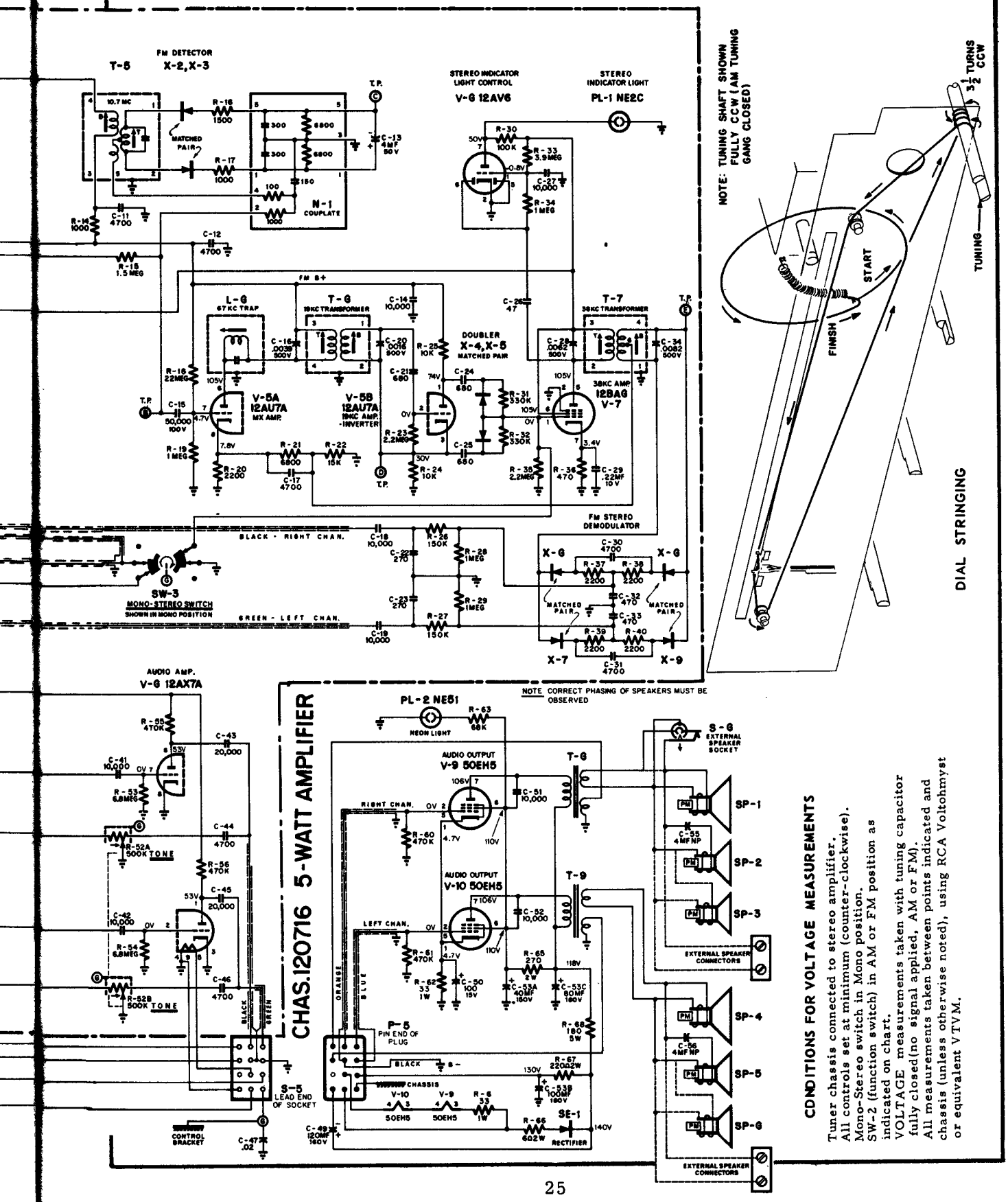

CONDITIONS FOR VOLTAGE MEASUREMENTS

Tuner chassis connected to stereo amplifier.
All controls set at minimum (counter-clockwise).
Mono-Stereo switch in Mono position.
SW-2 (function switch) in AM or FM position as indicated on chart.
VOLTAGE measurements taken with tuning capacitor fully closed(no signal applied, AM or FM).
All measurements taken between points indicated and chassis (unless otherwise noted), using RCA Voltohmyst or equivalent VTVM.

Emerson Radio

MODEL 899
"MERCURY"
CH. 120664, 664L

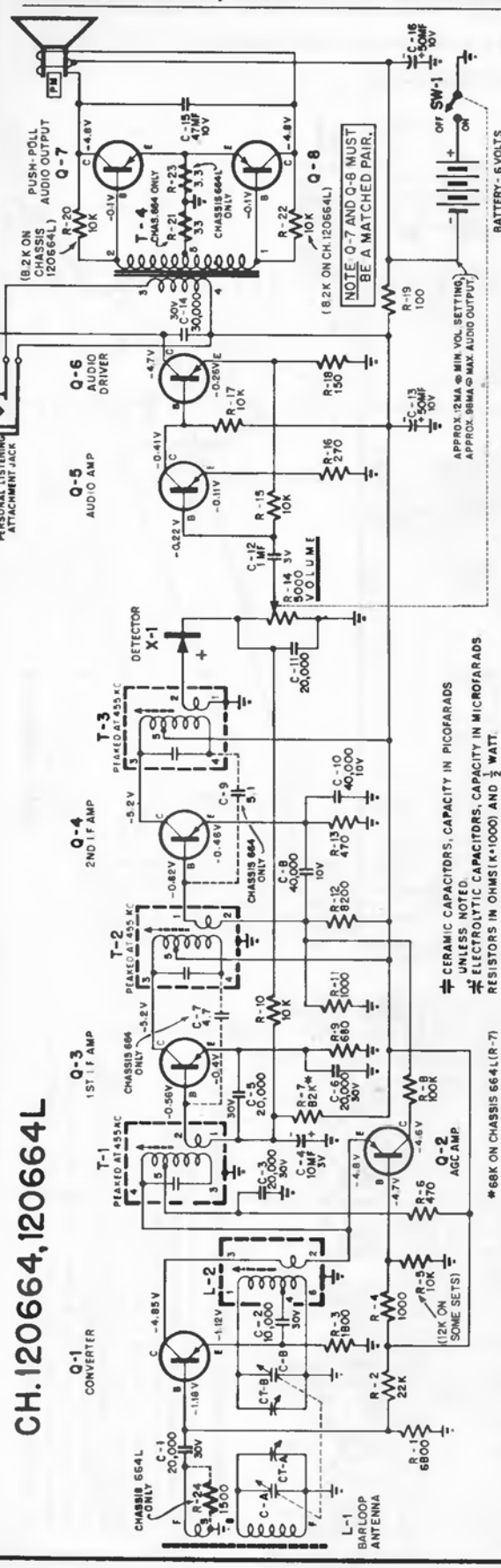

NOTE: THE FOLLOWING TRANSISTOR COMBINATIONS MUST BE OBSERVED (CHASSIS 664 ONLY)

TRANSISTOR	PART No.
Q-1	815065
Q-7, Q-8	815070A OR 815070B

TRANSISTOR	PART No.
Q-1	815066
Q-7, Q-8	815070C OR 815070D

NOTE: THE FOLLOWING TRANSISTOR COMBINATIONS MUST BE OBSERVED (CHASSIS 664L ONLY)

TRANSISTOR	PART No.	PART No.	PART No.
Q-6	815120B OR C	815120E	815120D
Q-7, Q-8	815120E	815120B OR C	815120C

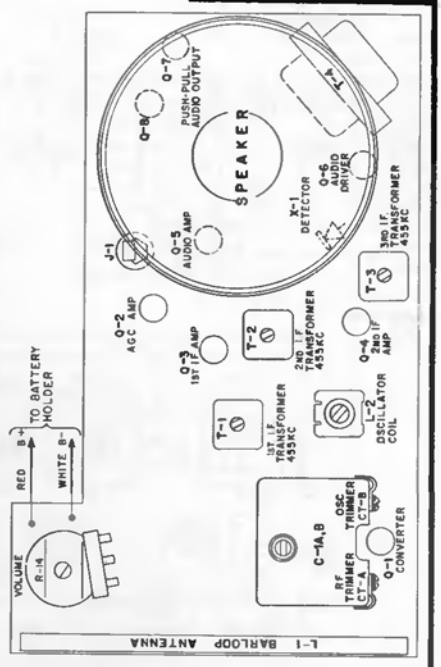

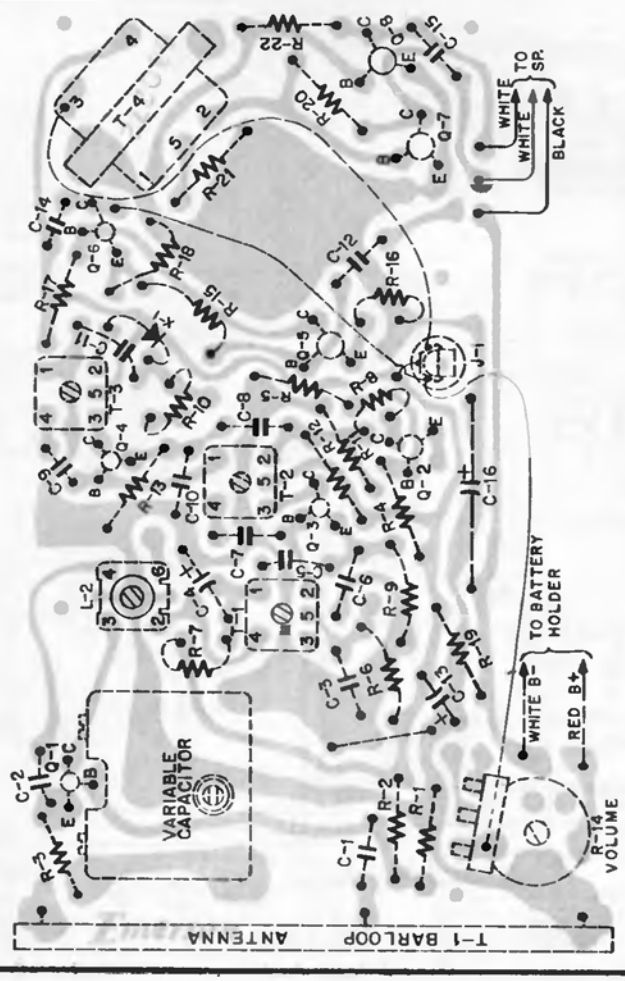

ETCHED PRINTED CIRCUIT CHASSIS 120664, 120664-L (BOTTOM VIEW)

Emerson Radio

MODELS:
P-1939, P-1940
AUDIO CH.: 120719
AM/FM TUNER: 120720C

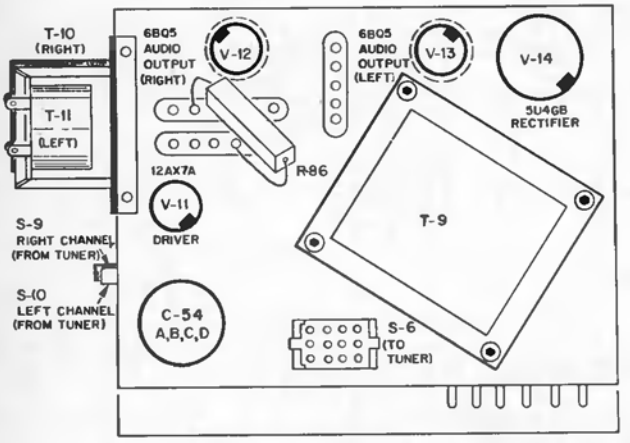

TUBE LOCATIONS.
STEREO AMP. CHASSIS

DUMONT

MODELS:
524, 525, 526.

(Material on pages 27 through 29)

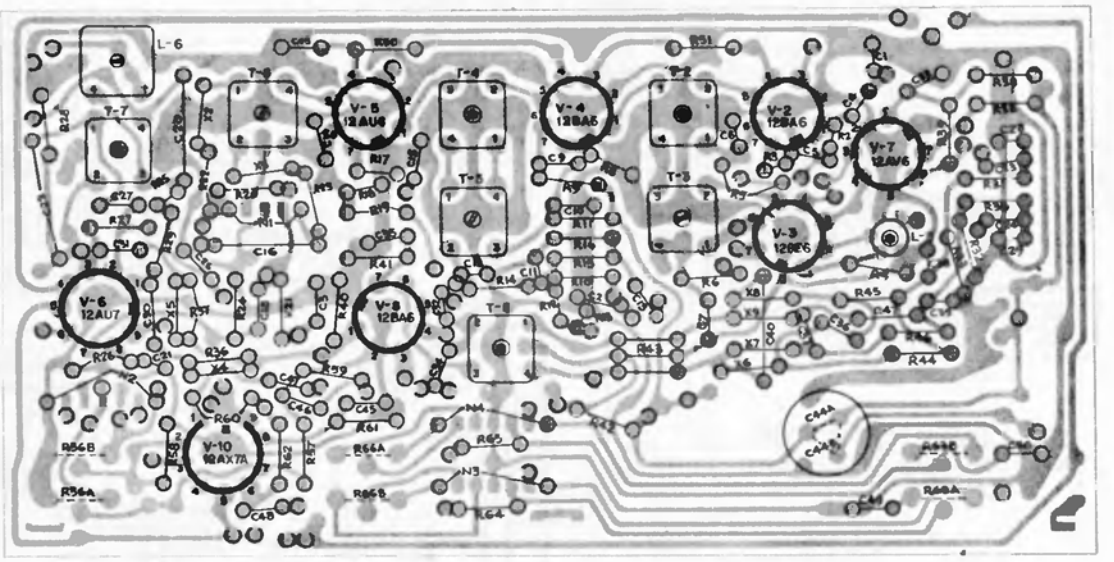

ETCHED PRINTED CIRCUIT, AM-FM TUNING CHASSIS (TOP VIEW)

TUBE LOCATIONS
AND ALIGNMENT POINTS,
AM-FM TUNING CHASSIS.

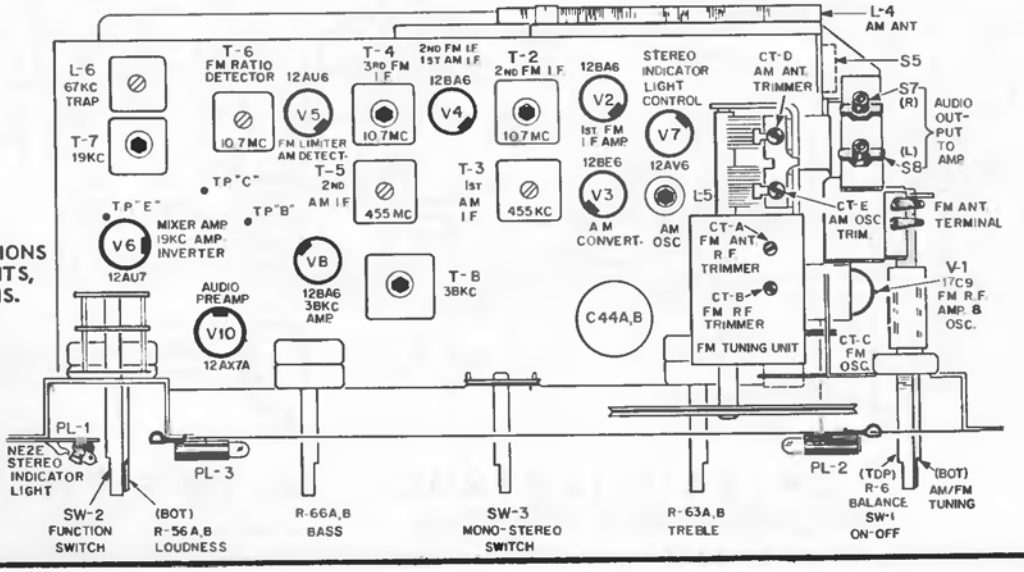

EMERSON and DU MONT Chassis 120719 and 120720C Diagrams

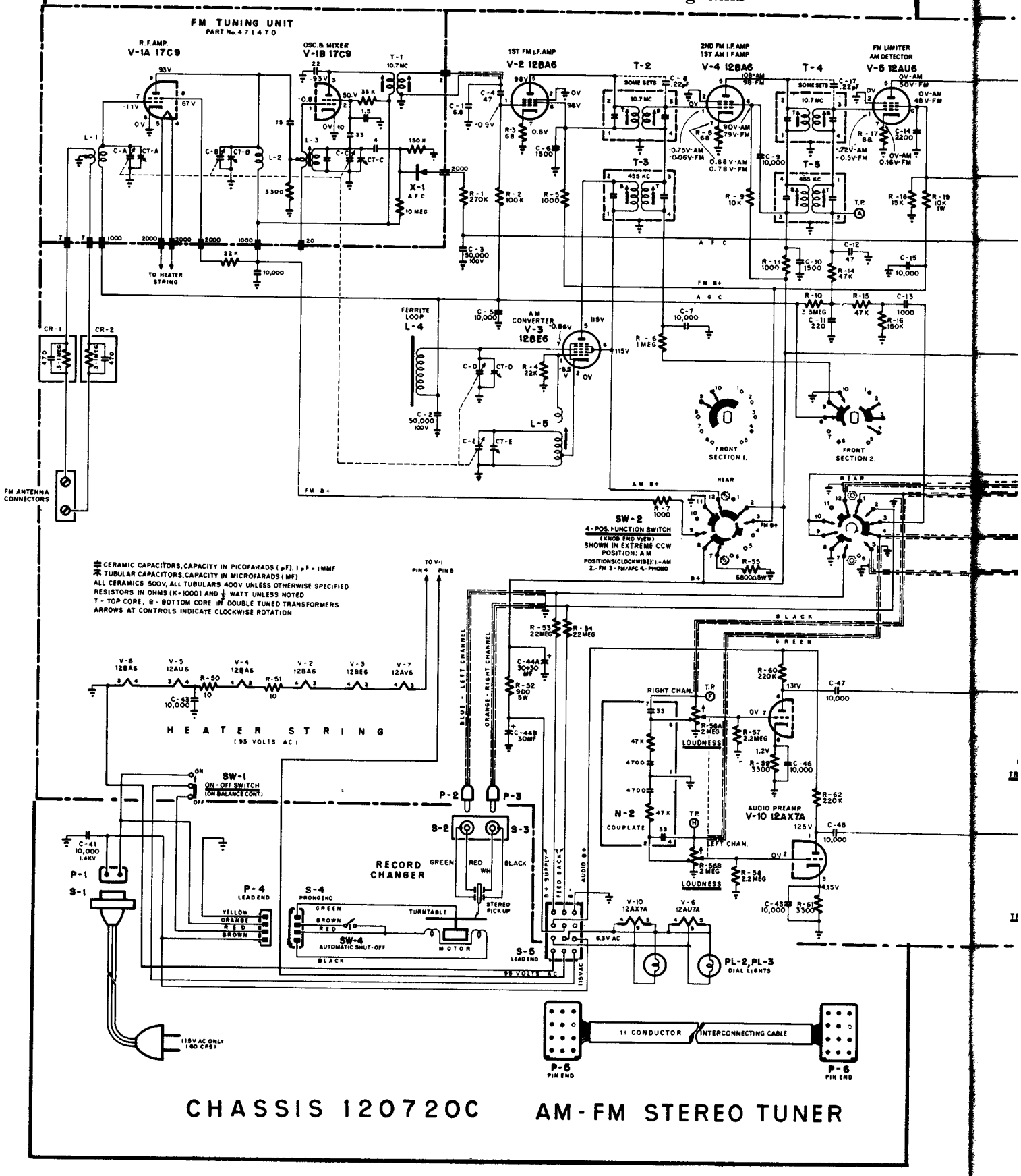

CHASSIS 120720C AM-FM STEREO TUNER

EMERSON and DUMONT Chassis 120719 and 120720C Diagrams, Continued

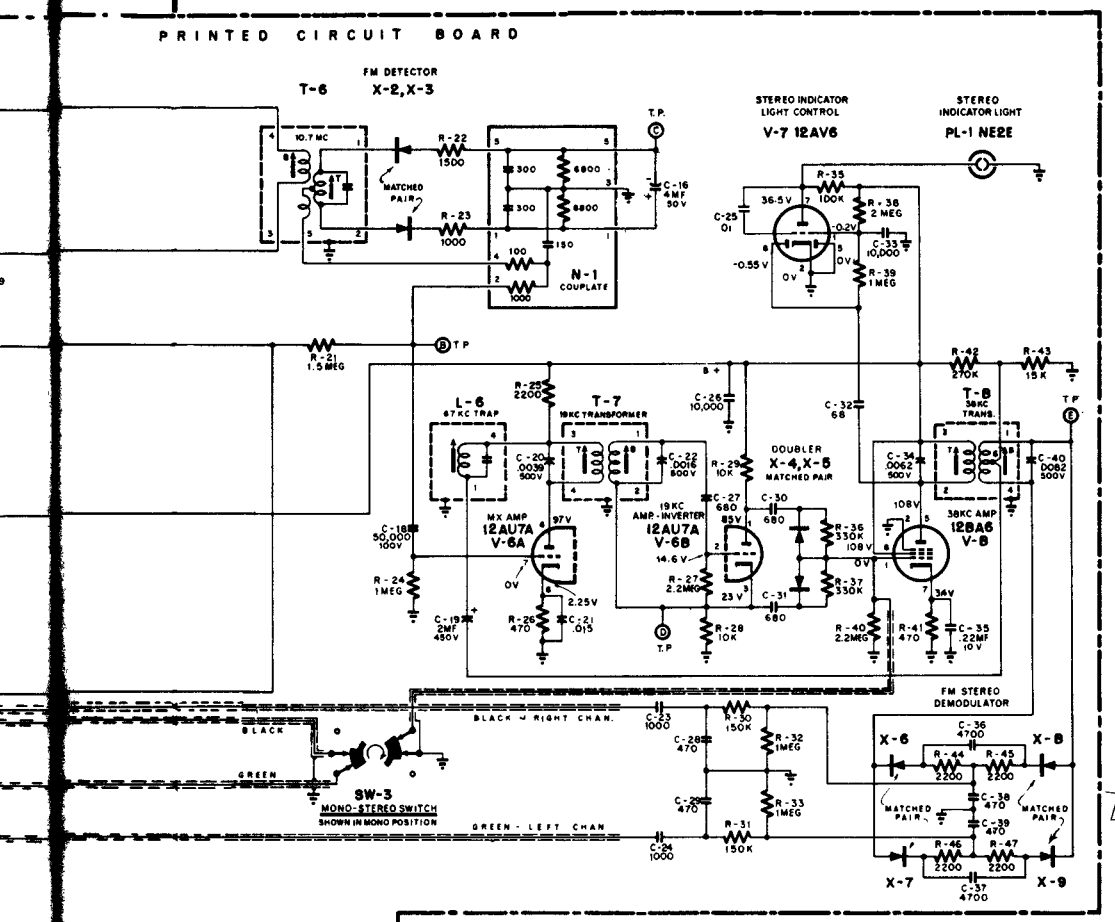

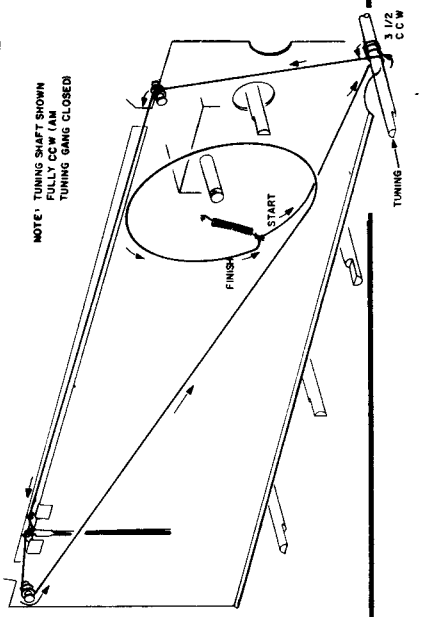

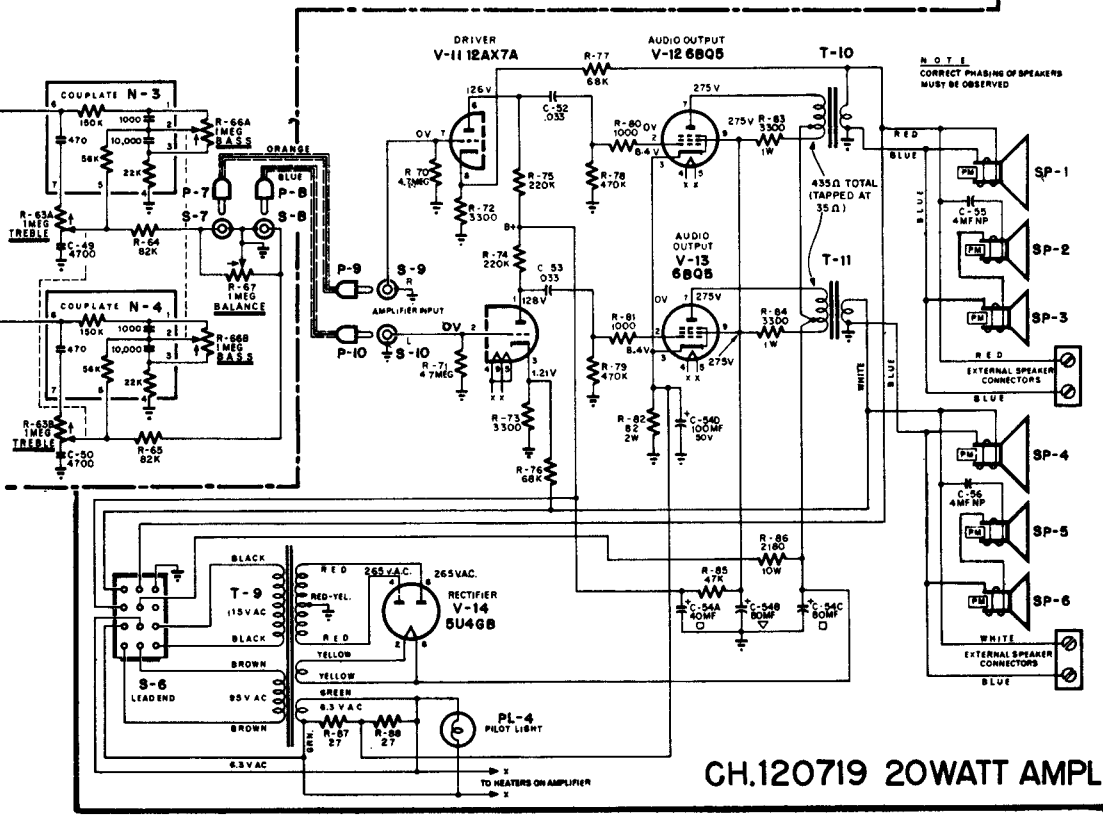

CONDITIONS FOR VOLTAGE MEASUREMENTS

Tuner chassis connected to stereo amplifier.
All controls set at minimum (counter-clockwise).
Mono-Stereo switch in Mono position.
SW-2 (function switch) in AM or FM position as indicated on chart.
VOLTAGE measurements taken with tuning capacitor fully closed(no signal applied, AM or FM).
All measurements taken between points indicated and chassis (unless otherwise noted), using RCA Voltohmyst or equivalent VTVM.

CH.120719 20WATT AMPLIFIER

Emerson Radio

MODELS:
P-1944, P-1946
CHASSIS: 120726

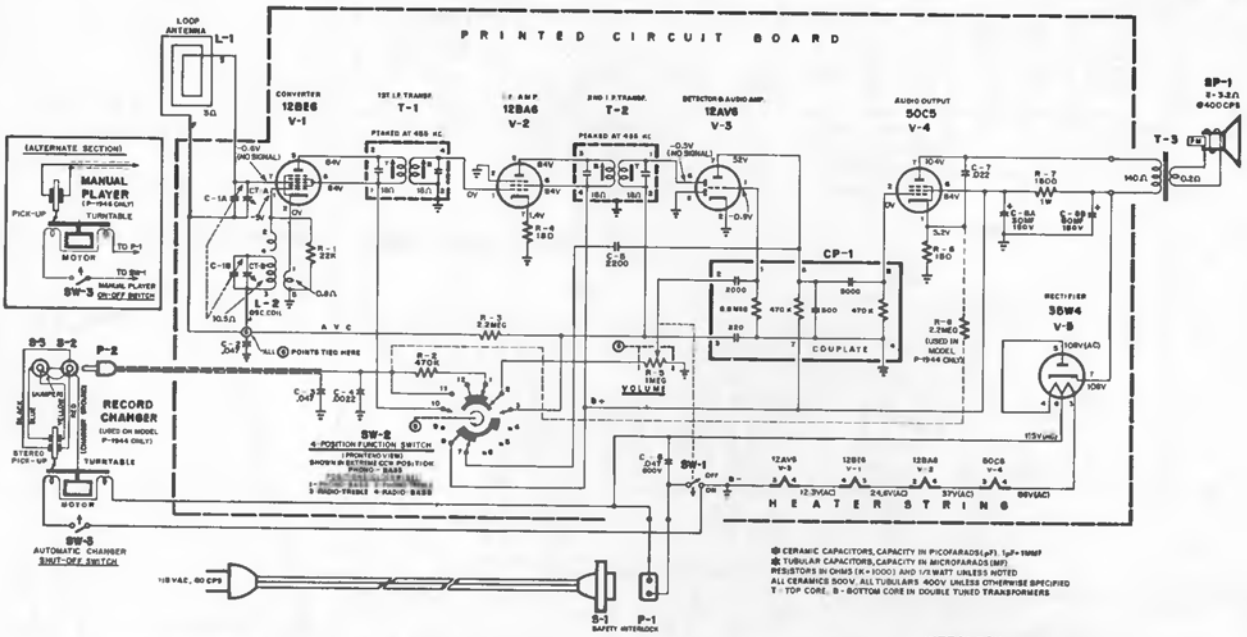

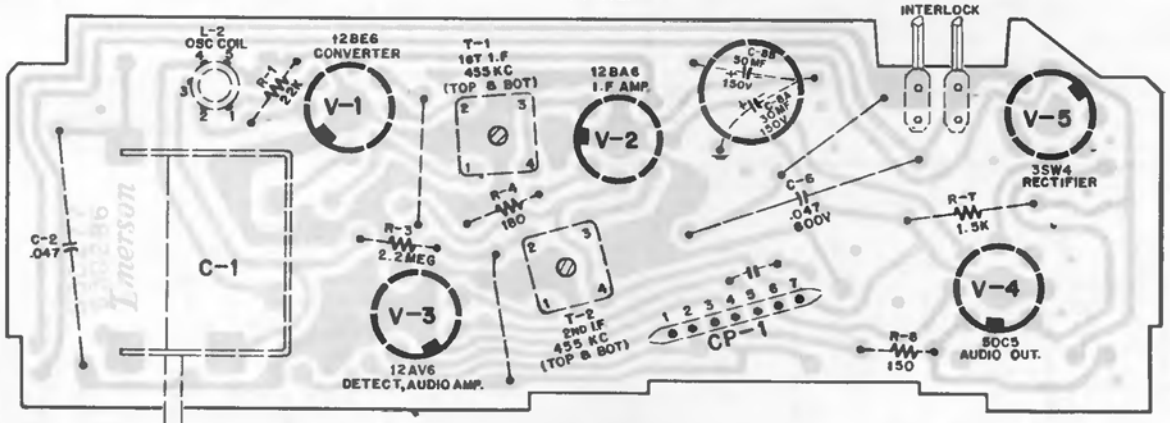

ETCHED PRINTED CIRCUIT (BOT. VIEW)

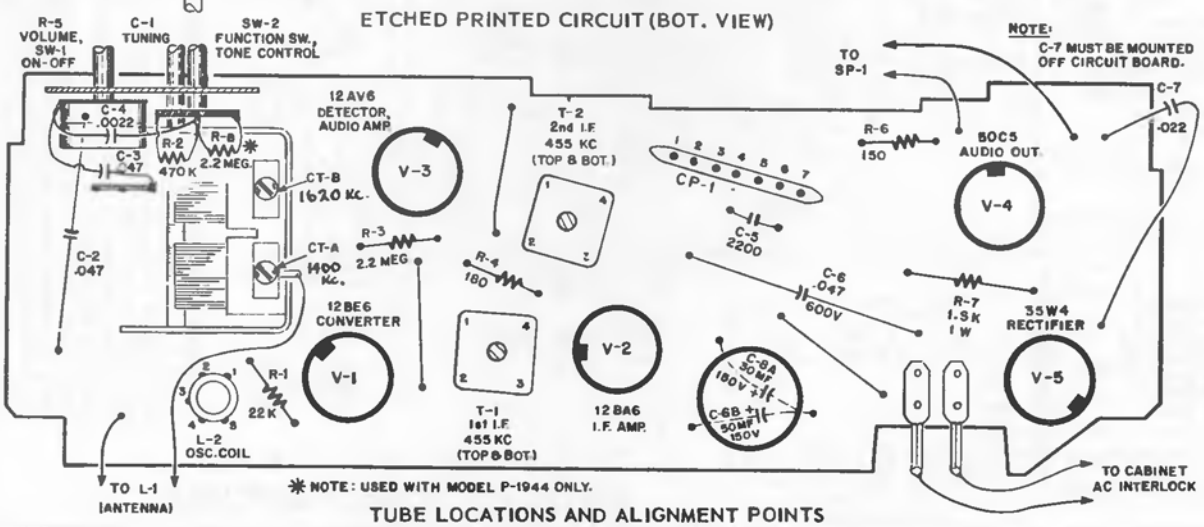

✱ NOTE: USED WITH MODEL P-1944 ONLY.

TUBE LOCATIONS AND ALIGNMENT POINTS

Emerson Radio

MODELS:
32P01, 32P02
CHASSIS: 120745

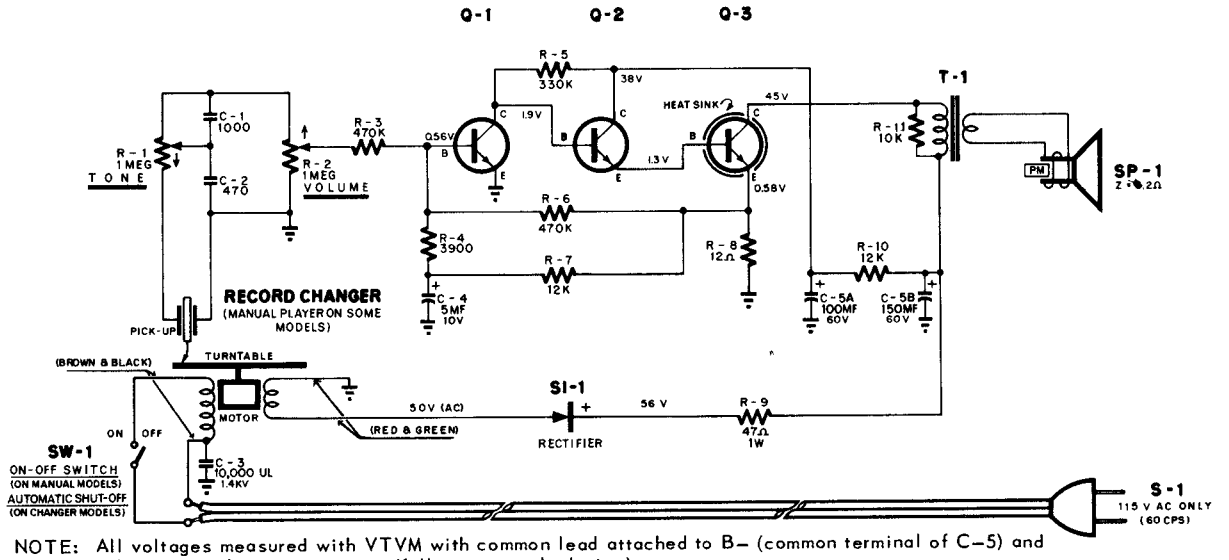

NOTE: All voltages measured with VTVM with common lead attached to B– (common terminal of C–5) and volume control set at minimum (fully counter-clockwise).

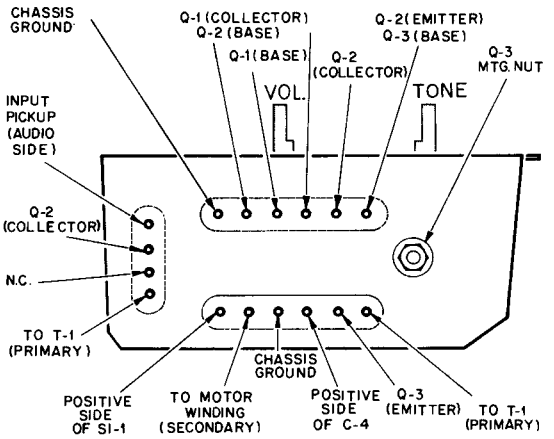

CONNECTION POINTS

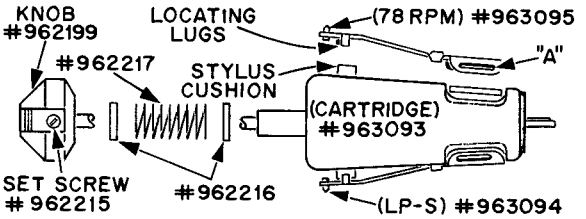

CARTRIDGE 963093

To replace either of the styli in cartridge number 963093, remove defective stylus by releasing clipped-on end at point (A). When installing new stylus, be sure the two locating lugs directly behind the sapphire tip are seated on either side of the stylus cushion.

Cartridge number 963093 (Ronette DC-500) is supplied complete with mounting bracket and all associated parts. To replace, remove cartridge mounting screw from top of tone arm, install new cartridge and replace mounting screw.

ADJUSTMENT SETTINGS, RECORD CHANGER 819218

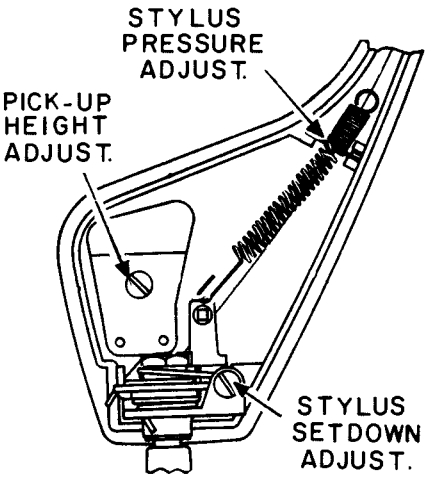

STYLUS SET-DOWN

Raise pick-up arm and adjust screw indicated for proper set-down on lead-in groove of 10" record. When correctly positioned for a 10" record, set-down point for 7" and 12" records should also be correct.

PICK-UP HEIGHT

Raise pick-up arm to a vertical position and adjust screw indicated until pick-up clears a stack of 10 records on the turntable by at least 1/8". A check should then be made to see that pick-up arm does not contact underside of remaining records stacked on the spindle shelf, and also to see that pick-up arm clears top of rest post during change cycle.

STYLUS PRESSURE

Adjust stylus pressure by repositioning balance spring in the various holes provided inside pick-up arm until correct pressure of 6 to 8 grams is obtained.

Emerson Radio

MODEL: 31T01
CHASSIS: 120747

Model 31T01, Chassis 120747

(For diagram see page 33)

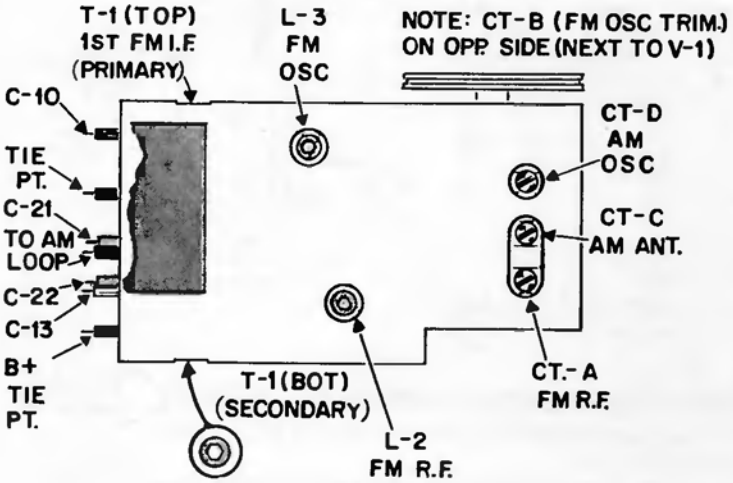

FM TUNING UNIT 471538

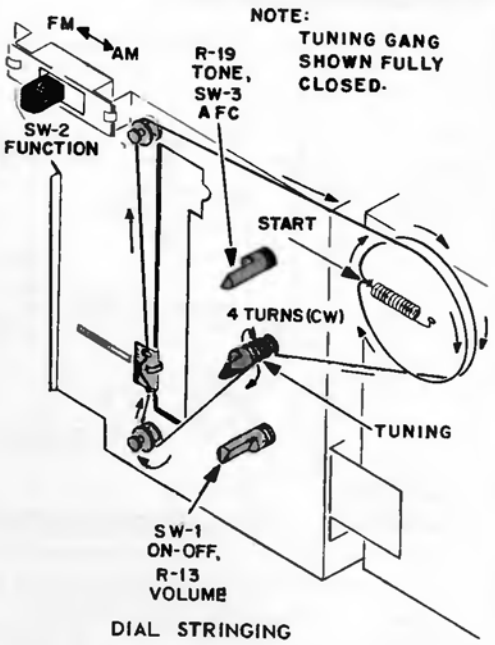

DIAL STRINGING

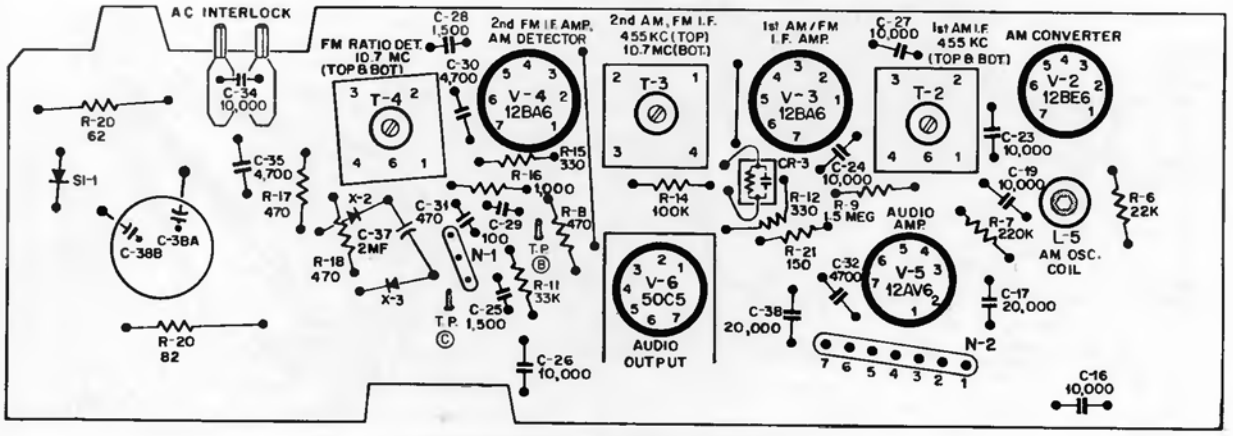

TUBE LOCATIONS AND ALIGNMENT POINTS

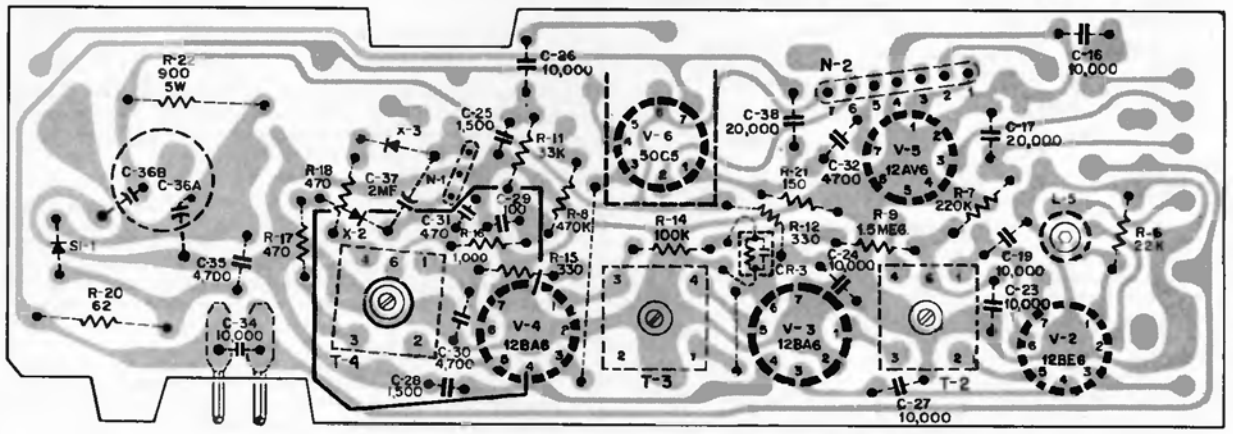

ETCHED CIRCUIT CHASSIS (BOTTOM VIEW)

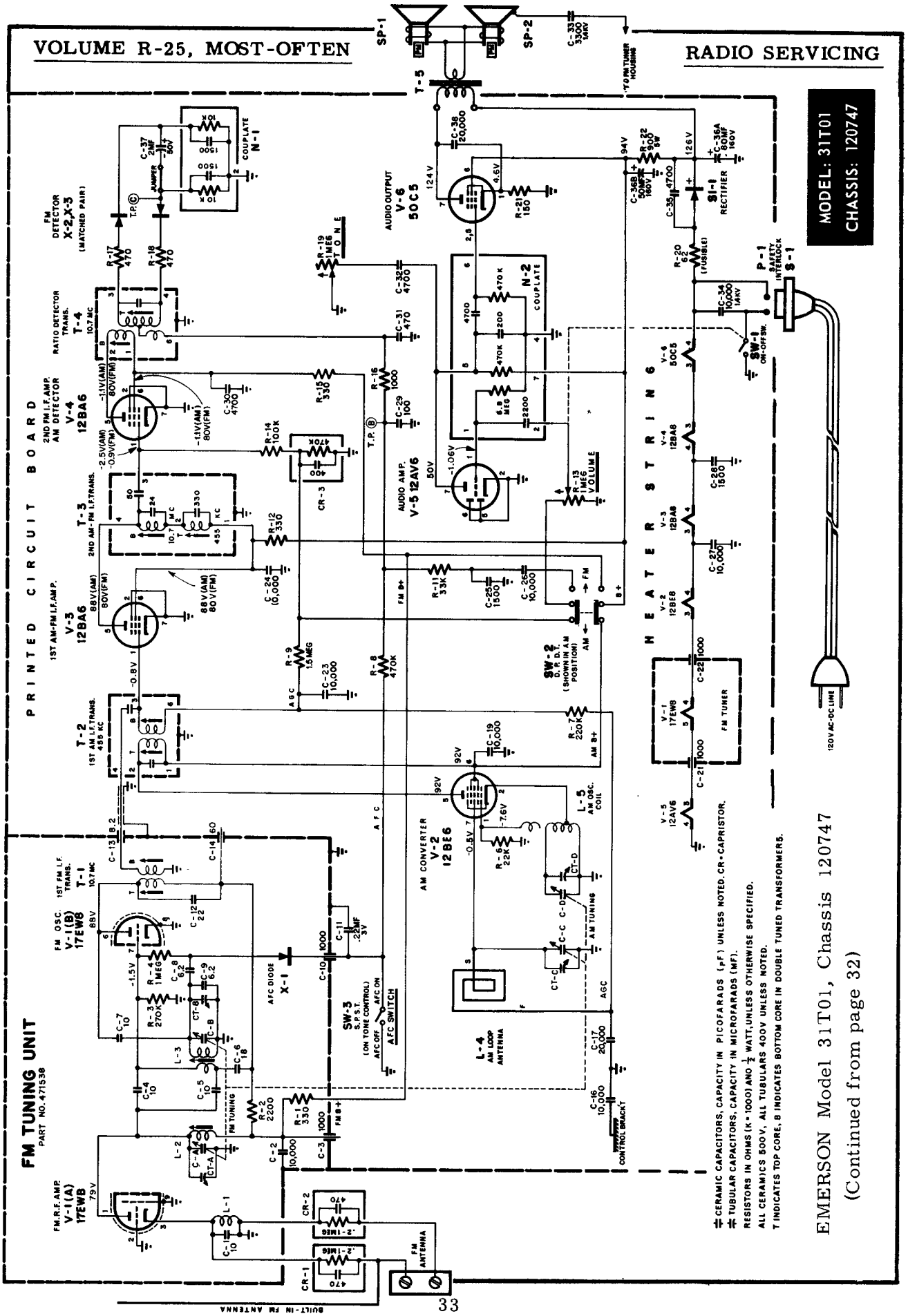

EMERSON Model 31T01, Chassis 120747

(Continued from page 32)

Gamble-Skogmo, Inc.

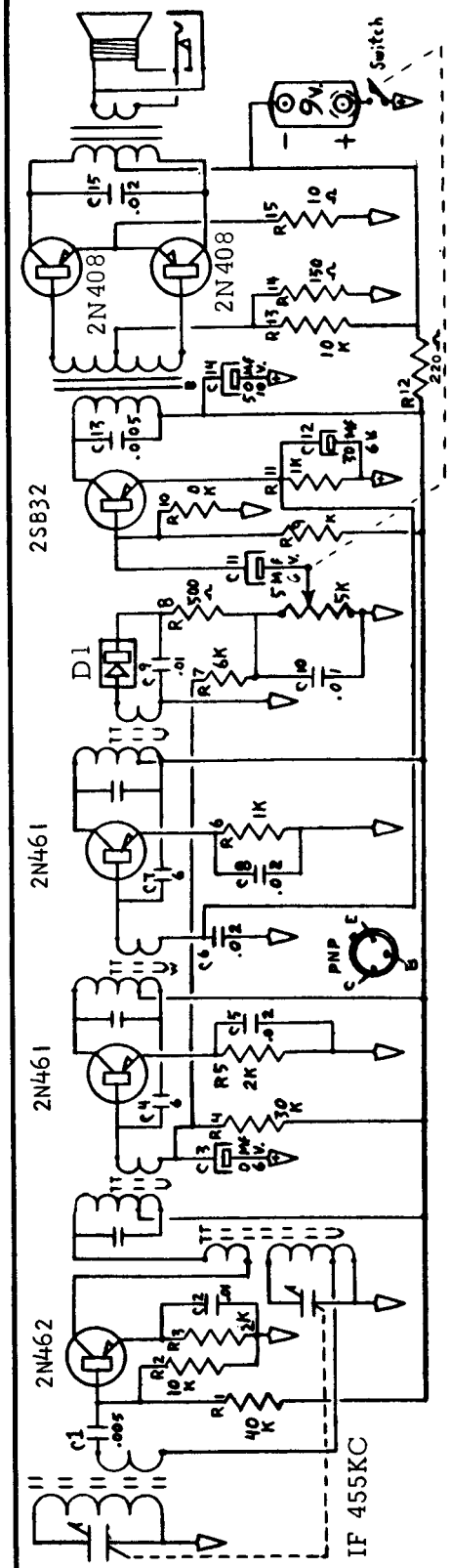

MODEL 60-9925A

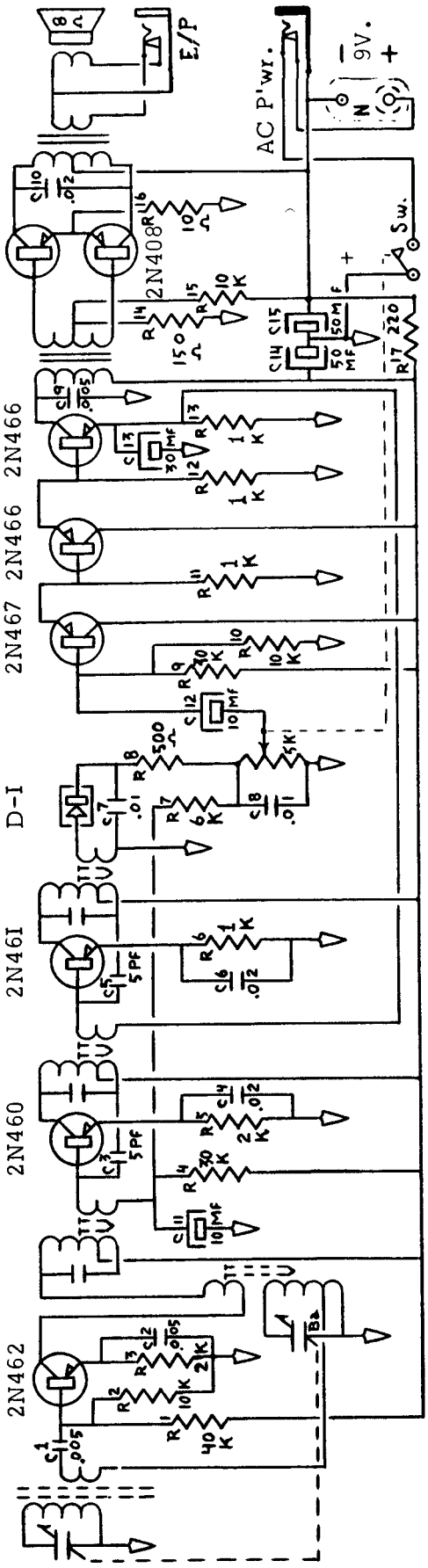

MODEL RA 60-9930B

GENERAL ELECTRIC

Model A-600 Phono-Viewer

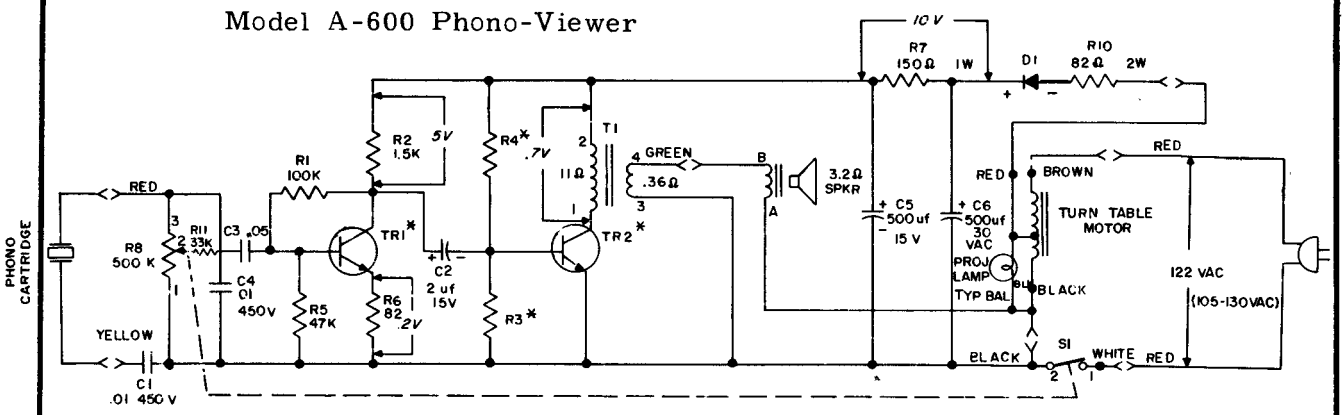

UNLESS OTHERWISE NOTED
CAPACITORS MORE THAN 1 = MMF
CAPACITORS LESS THAN 1 = MF
RESISTORS ARE 1/2 WATT, K=1000

SEE LIST FOR VALUES OF RESISTORS R3 AND R4. (VALUES CHANGE WITH TRANSISTOR RATINGS)

—< >— = WIRE NUT CONNECTIONS

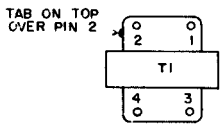

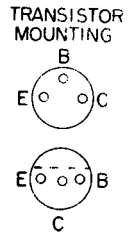

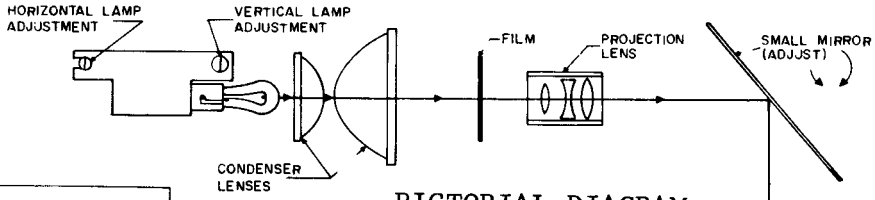

PICTORIAL DIAGRAM-OPTICAL SYSTEM

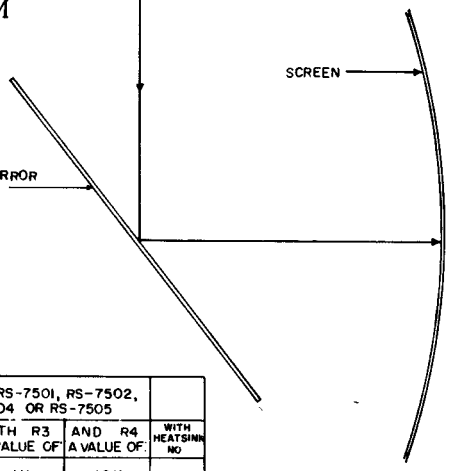

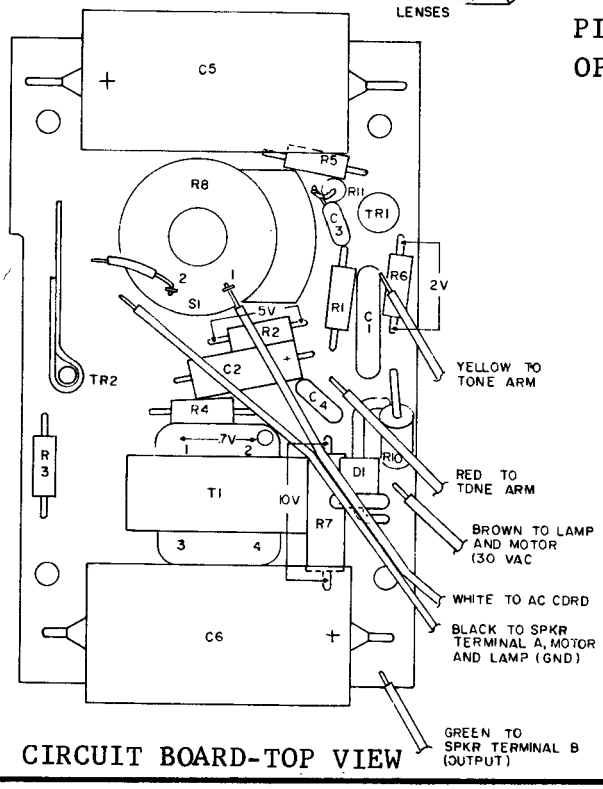

CIRCUIT BOARD-TOP VIEW

* TRANSISTORS

TR1	MAY BE EITHER RS-7501, RS-7502, RS-7503, RS-7504 OR RS-7505			
TR2	MAY BE EITHER	WITH R3 A VALUE OF	AND R4 A VALUE OF	WITH HEATSINK NO
	RS-7601 OR	1K	10K	RS-6683
	RS-7602 OR	1K	12K	RS-6683
	RS-7603 OR	1K	12K	RS-6683
	RS-7604 OR	1K	12K	RS-6683
	RS-7605 OR	1K	12K	RS-6683
	RS-7619 OR	1.5K	12K	
	RS-7620	1.5K	12K	

GENERAL ELECTRIC Models T295A and C555A

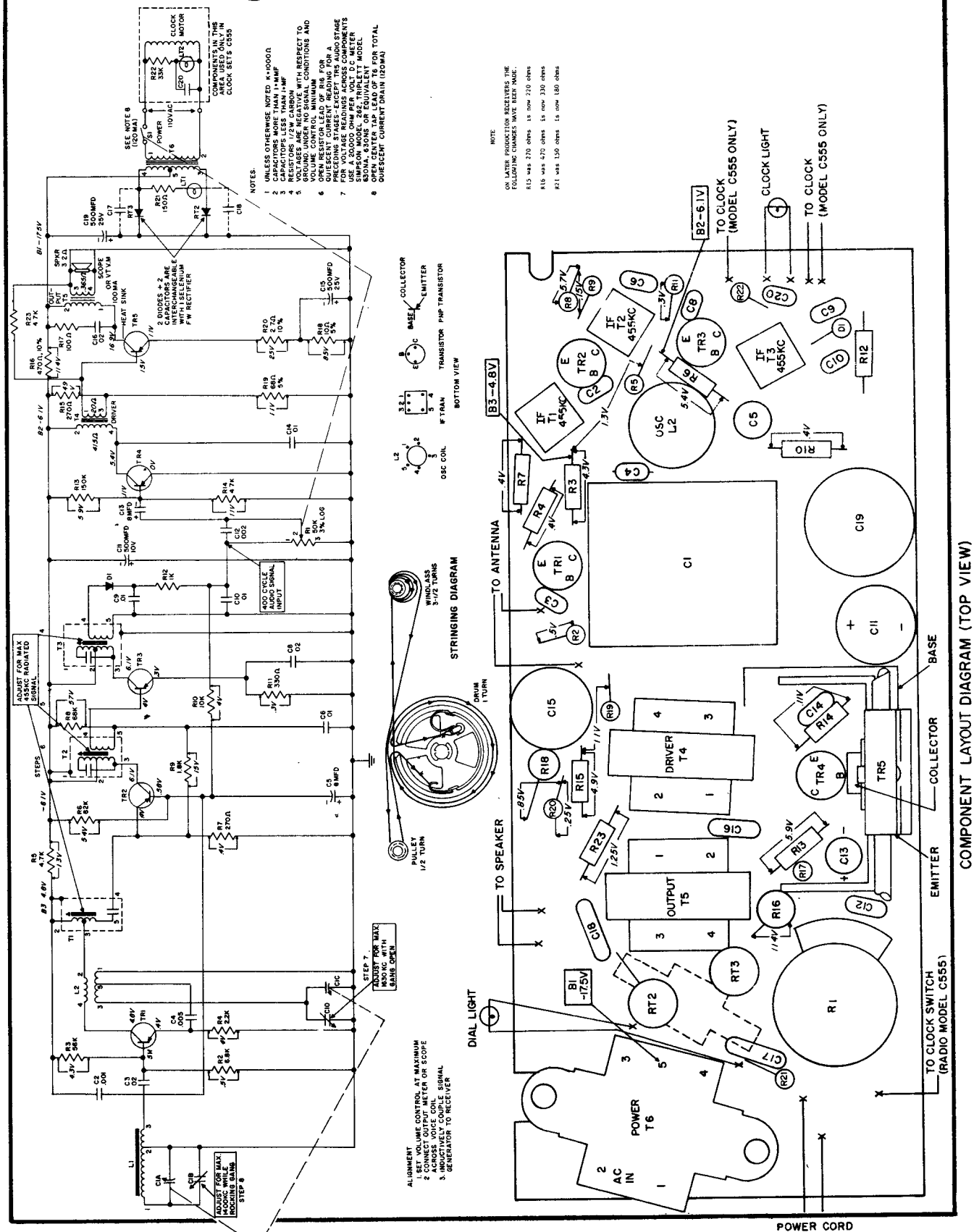

GENERAL ELECTRIC

Models C403D, C505B, C506B

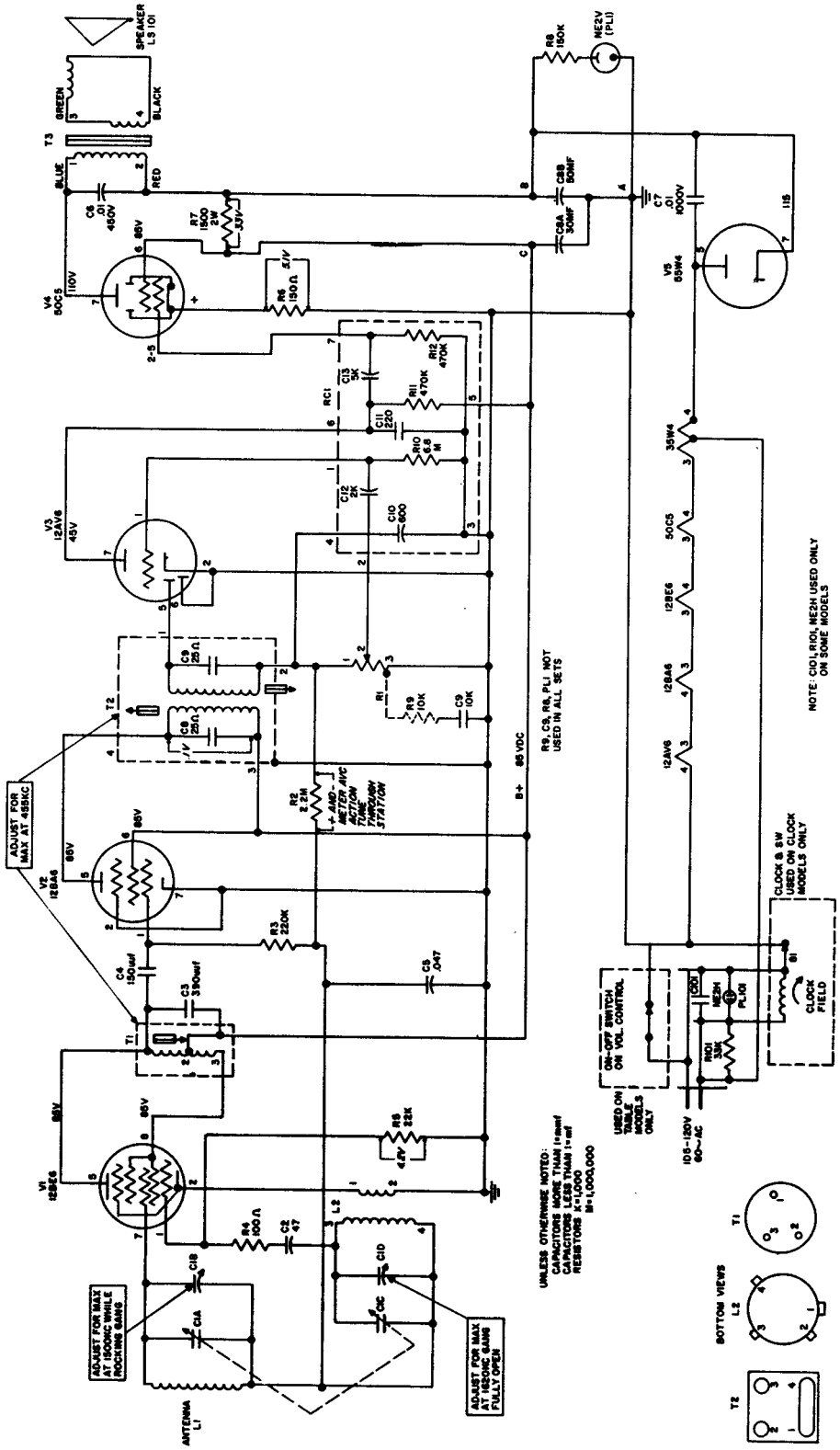

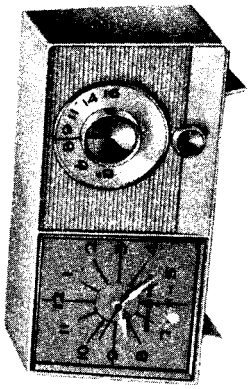

CATALOG NO.	SYMBOL	DESCRIPTION
		CAPACITORS
RS-6440	C1	Tuning Capacitor
R8-1785	C2	47 mmf. cap. N2200
	C3	390 mmf. MICA cap.
	C4	150 mmf. cap.
	C5	.05 mfd. cap.
	C6	.01 mfd. cap. 450V
RS-2060	C7	.01 mfd. cap. 1000V
	C8	75/30 mfd. 150V ELECTROLYTIC

		POTENTIOMETER
RS-6437	R1	500 K Volume Control
		COILS AND TRANSFORMERS
RS-6442	L1	Antenna
RS-6443	L2	Osc. Coil
RS-2149	T1	I.F. Transformer
	T2	I.F. Transformer
RS-6439	T3	Output Transformer
		COUPLATE
RS-6441	RC1	Audio Couplate

GENERAL ELECTRIC

Models P910AA, P911AA, P914AA, P945B, P950A, P960A, P995A, P996A

(For Table 2, Component Substitution Chart, see page 39, at right)

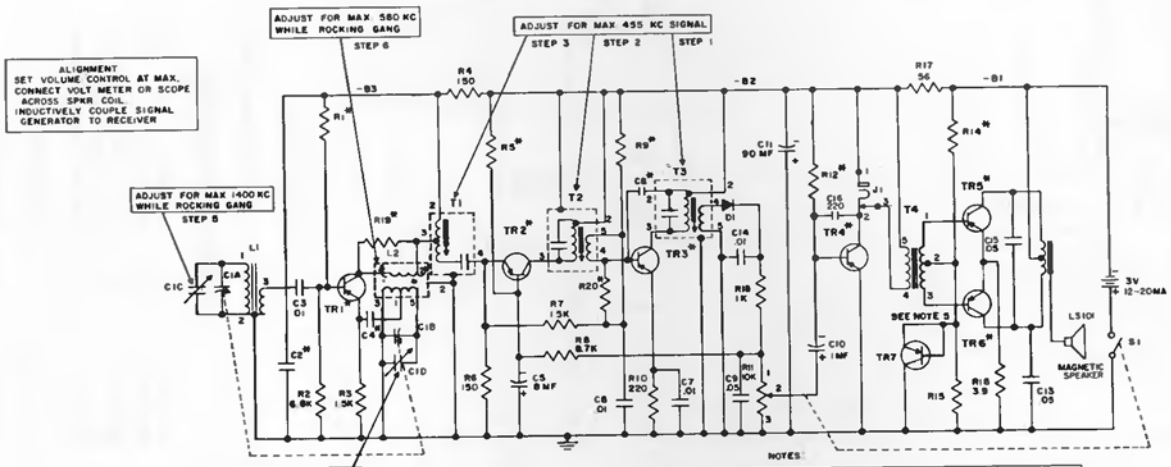

NOTES:

1. UNLESS OTHERWISE NOTED
   CAP. MORE THAN 1 MMF
   CAP. LESS THAN 1 MF
   RES. ARE 1/2 WATT K = 1000
2. VOLTAGES ARE NEGATIVE WITH RESPECT TO GRD. UNDER NO SIGNAL CONDITIONS & VOL. CONTROL MIN.
3. REPLACE TRANSISTORS WITH TYPES SHOWN IN TABLE 2
4. * SEE COMPONENT SUBSTITUTION CHART.
5. TR7 (USE ONLY RS3904), R14 = 2.7K 1/2 WATT, R15 = 220Ω 1/4 WATT, THIS BIAS REGULATOR IS USED IN P980 AND NOT IN P910

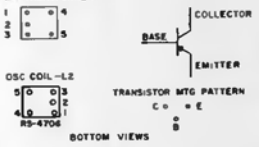

TABLE 1

TABLE OF TRANSISTOR VOLTAGES				
	EMITTER	BASE	COLLECTOR	FUNCTION
TR1	0	.65	2.5	OSC MIXER
TR2	.19 TO .29	.34 TO .4	2.6	1st I.F. AMP
TR3	.18 TO .3	.35 TO .43	2.6	2nd I.F. AMP
TR4	0	2	2.6	AUDIO DRIVER
TR5	.04	2	3	PUSH PULL
TR6	.04	.2	3	AUDIO OUTPUT
TR7	0	.15 TO .2	.18 TO .2	BIAS REG

TROUBLESHOOTING

A check of battery condition and total current drain of the receiver should be made first. All current measurements are made at quiescence with the receiver turned on, volume control at minimum, tuning gang closed, and with no-signal conditions.

The total quiescent receiver current drain is 12 to 20 mils. This is measured by inserting a milliammeter in series with the batteries.

CHASSIS REMOVAL

1. Remove the dial knob screw with a small Phillips screw driver and lift off the dial knob.
2. Remove cabinet back by inserting a coin in the slot on the bottom of the set, giving it a slight twist.
3. Remove two 1/8" Phillips-head screws located underneath the batteries.
4. Remove 1/8" Phillips-head screw located next to the tuning capacitor.
5. Slide out the circuit board in the direction of the cabinet bottom and lift out.

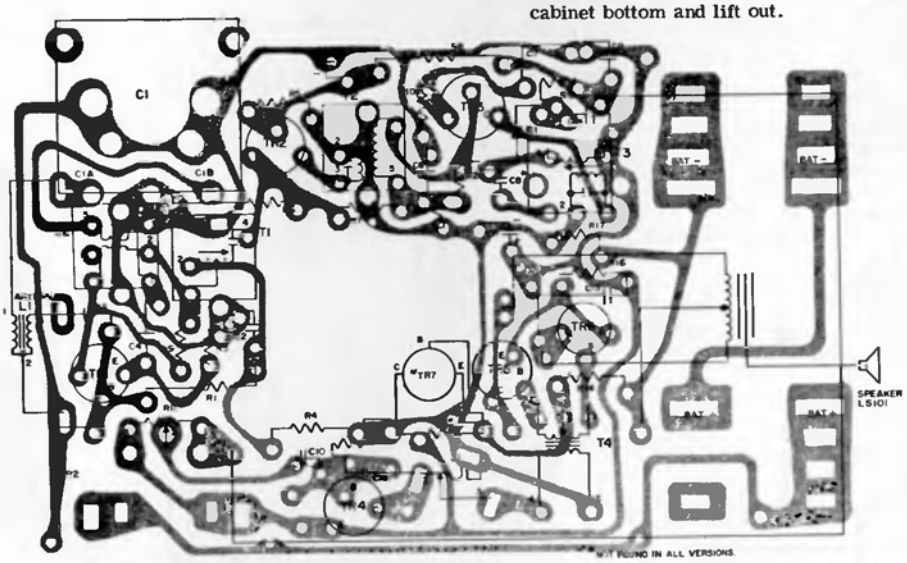

GENERAL ELECTRIC

Models P910AA, P911AA, P914AA, P945B, P950A, P960A, P995A, P996A

TABLE 2, COMPONENT SUBSTITUTION CHART

The following components may vary in different group versions of this model. Use it to determine the necessary changes required when substituting another component for the original one. When substituting from one group, all items listed as being in the new group must be used.

GROUP	TR1	TR2	TR3	TR4	TR5,6	R1	R5	R8	R9	R12	R14	R15	R19	R20	C2	C4	C8
1	RS-3868	RS-3862	RS-3863	RS-5531	RS-5734	18K	27K	8.2K	12K	100K	2.7K	220	8.2K	3.3K	.005	.005	omit
2	RS-3868	RS-3862	RS-3863	RS-5531	RS-5735	18K	27K	8.2K	12K	100K	2.7K	220	8.2K	3.3K	.005	.005	omit
3	RS-3868	RS-3862	RS-3863	RS-5531	RS-5736	18K	27K	8.2K	12K	100K	2.7K	220	8.2K	3.3K	.005	.005	omit
4	RS-3868	RS-3862	RS-3863	RS-5531	RS-5737	18K	27K	8.2K	12K	100K*	2.7K	220	8.2K	3.3K	.005	.005	omit
5	RS-3868	RS-3862	RS-3863	RS-5532	RS-5734	18K	27K	8.2K	12K	120K	2.7K	220	8.2K	3.3K	.005	.005	omit
6	RS-3868	RS-3862	RS-3863	RS-5532	RS-5735	18K	27K	8.2K	12K	120K	2.7K	220	8.2K	3.3K	.005	.005	omit
7	RS-3868	RS-3862	RS-3863	RS-5532	RS-5736	18K	27K	8.2K	12K	120K	2.7K	220	8.2K	3.3K	.005	.005	omit
8	RS-3868	RS-3862	RS-3863	RS-5532	RS-5737	18K	27K	8.2K	12K	120K	2.7K	220	8.2K	3.3K	.005	.005	omit
9	RS-3868	RS-3862	RS-3863	RS-5533	RS-5731	18K	27K	8.2K	12K	180K	1.8K	150	8.2K	3.3K	.005	.005	omit
10	RS-3868	RS-3862	RS-3863	RS-5533	RS-5732	18K	27K	8.2K	12K	180K	1.8K	150	8.2K	3.3K	.005	.005	omit
11	RS-3868	RS-3862	RS-3863	RS-5533	RS-5733	18K	27K	8.2K	12K	180K	1.8K	150	8.2K	3.3K	.005	.005	omit
12	RS-3868	RS-3862	RS-3863	RS-5533	RS-5734	18K	27K	8.2K	12K	180K	2.7K	220	8.2K	3.3K	.005	.005	omit
13	RS-3868	RS-3862	RS-3863	RS-5533	RS-5735	18K	27K	8.2K	12K	180K	2.7K	220	8.2K	3.3K	.005	.005	omit
14	RS-3868	RS-3862	RS-3863	RS-5533	RS-5736	18K	27K	8.2K	12K	180K	2.7K	220	8.2K	3.3K	.005	.005	omit
15	RS-3868	RS-3862	RS-3863	RS-5533	RS-5737	18K	27K	8.2K	12K	180K	2.7K	220	8.2K	3.3K	.005	.005	omit
16	RS-3868	RS-3862	RS-3863	RS-5534	RS-5731	18K	27K	8.2K	12K	220K	1.8K	150	8.2K	3.3K	.005	.005	omit
17	RS-3868	RS-3862	RS-3863	RS-5534	RS-5732	18K	27K	8.2K	12K	220K	1.8K	150	8.2K	3.3K	.005	.005	omit
18	RS-3868	RS-3862	RS-3863	RS-5534	RS-5733	18K	27K	8.2K	12K	220K	1.8K	150	8.2K	3.3K	.005	.005	omit
19	RS-3868	RS-3862	RS-3863	RS-5535	RS-5731	18K	27K	8.2K	12K	270K	1.8K	150	8.2K	3.3K	.005	.005	omit
20	RS-3868	RS-3862	RS-3863	RS-5535	RS-5732	18K	27K	8.2K	12K	270K	1.8K	150	8.2K	3.3K	.005	.005	omit
21	RS-3868	RS-3862	RS-3863	RS-5535	RS-5733	18K	27K	8.2K	12K	270K	1.8K	150	8.2K	3.3K	.005	.005	omit
22	RS-5107	RS-5206	RS-5312	RS-5531	RS-5734	22K	47K	12K	18K	100K	2.7K	220	omit	omit	.01	.01	RS-3413
23	RS-5107	RS-5206	RS-5312	RS-5531	RS-5735	22K	47K	12K	18K	100K	2.7K	220	omit	omit	.01	.01	RS-3413
24	RS-5107	RS-5206	RS-5312	RS-5531	RS-5736	22K	47K	12K	18K	100K	2.7K	220	omit	omit	.01	.01	RS-3413
25	RS-5107	RS-5206	RS-5312	RS-5531	RS-5737	22K	47K	12K	18K	100K	2.7K	220	omit	omit	.01	.01	RS-3413
26	RS-5107	RS-5206	RS-5312	RS-5532	RS-5734	22K	47K	12K	18K	120K	2.7K	220	omit	omit	.01	.01	RS-3413
27	RS-5107	RS-5206	RS-5312	RS-5532	RS-5735	22K	47K	12K	18K	120K	2.7K	220	omit	omit	.01	.01	RS-3413
28	RS-5107	RS-5206	RS-5312	RS-5532	RS-5736	22K	47K	12K	18K	120K	2.7K	220	omit	omit	.01	.01	RS-3413
29	RS-5107	RS-5206	RS-5312	RS-5532	RS-5737	22K	47K	12K	18K	120K	2.7K	220	omit	omit	.01	.01	RS-3413
30	RS-5107	RS-5206	RS-5312	RS-5533	RS-5731	22K	47K	12K	18K	180K	1.8K	150	omit	omit	.01	.01	RS-3413
31	RS-5107	RS-5206	RS-5312	RS-5533	RS-5732	22K	47K	12K	18K	180K	1.8K	150	omit	omit	.01	.01	RS-3413
32	RS-5107	RS-5206	RS-5312	RS-5533	RS-5733	22K	47K	12K	18K	180K	1.8K	150	omit	omit	.01	.01	RS-3413
33	RS-5107	RS-5206	RS-5312	RS-5533	RS-5734	22K	47K	12K	18K	180K	2.7K	220	omit	omit	.01	.01	RS-3413
34	RS-5107	RS-5206	RS-5312	RS-5533	RS-5735	22K	47K	12K	18K	180K	2.7K	220	omit	omit	.01	.01	RS-3413
35	RS-5107	RS-5206	RS-5312	RS-5533	RS-5736	22K	47K	12K	18K	180K	2.7K	220	omit	omit	.01	.01	RS-3413
36	RS-5107	RS-5206	RS-5312	RS-5533	RS-5737	22K	47K	12K	18K	180K	2.7K	220	omit	omit	.01	.01	RS-3413
37	RS-5107	RS-5206	RS-5312	RS-5534	RS-5731	22K	47K	12K	18K	220K	1.8K	150	omit	omit	.01	.01	RS-3413
38	RS-5107	RS-5206	RS-5312	RS-5534	RS-5732	22K	47K	12K	18K	220K	1.8K	150	omit	omit	.01	.01	RS-3413
39	RS-5107	RS-5206	RS-5312	RS-5534	RS-5733	22K	47K	12K	18K	220K	1.8K	150	omit	omit	.01	.01	RS-3413
40	RS-5107	RS-5206	RS-5312	RS-5535	RS-5731	22K	47K	12K	18K	270K	1.8K	150	omit	omit	.01	.01	RS-3413
41	RS-5107	RS-5206	RS-5312	RS-5535	RS-5732	22K	47K	12K	18K	270K	1.8K	150	omit	omit	.01	.01	RS-3413
42	RS-5107	RS-5206	RS-5312	RS-5535	RS-5733	22K	47K	12K	18K	270K	1.8K	150	omit	omit	.01	.01	RS-3413
43																	
44																	
45	RS-5109	RS-5206	RS-5312	RS-5535	RS-5733	18K	47K	12K	18K	270K	1.8K	220	omit	omit	.01	.005	RS-3413
46	RS-5109	RS-5206	RS-5312	RS-5531	RS-5734	18K	47K	12K	18K	100K	2.7K	220	omit	omit	.01	.005	RS-3413
47	RS-5109	RS-5206	RS-5312	RS-5531	RS-5735	18K	47K	12K	18K	100K	2.7K	220	omit	omit	.01	.005	RS-3413
48	RS-5109	RS-5206	RS-5312	RS-5531	RS-5736	18K	47K	12K	18K	100K	2.7K	220	omit	omit	.01	.005	RS-3413
49	RS-5109	RS-5206	RS-5312	RS-5531	RS-5737	18K	47K	12K	18K	100K	2.7K	220	omit	omit	.01	.005	RS-3413
50	RS-5109	RS-5206	RS-5312	RS-5532	RS-5734	18K	47K	12K	18K	120K	2.7K	220	omit	omit	.01	.005	RS-3413
51	RS-5109	RS-5206	RS-5312	RS-5532	RS-5735	18K	47K	12K	18K	120K	2.7K	220	omit	omit	.01	.005	RS-3413
52	RS-5109	RS-5206	RS-5312	RS-5532	RS-5736	18K	47K	12K	18K	120K	2.7K	220	omit	omit	.01	.005	RS-3413
53	RS-5109	RS-5206	RS-5312	RS-5532	RS-5737	18K	47K	12K	18K	120K	2.7K	220	omit	omit	.01	.005	RS-3413
54	RS-5109	RS-5206	RS-5312	RS-5533	RS-5731	18K	47K	12K	18K	180K	1.8K	150	omit	omit	.01	.005	RS-3413
55	RS-5109	RS-5206	RS-5312	RS-5533	RS-5732	18K	47K	12K	18K	180K	1.8K	150	omit	omit	.01	.005	RS-3413
56	RS-5109	RS-5206	RS-5312	RS-5533	RS-5733	18K	47K	12K	18K	180K	1.8K	150	omit	omit	.01	.005	RS-3413
57	RS-5109	RS-5206	RS-5312	RS-5533	RS-5734	18K	47K	12K	18K	180K	2.7K	220	omit	omit	.01	.005	RS-3413
58	RS-5109	RS-5206	RS-5312	RS-5533	RS-5735	18K	47K	12K	18K	180K	2.7K	220	omit	omit	.01	.005	RS-3413
59	RS-5109	RS-5206	RS-5312	RS-5533	RS-5736	18K	47K	12K	18K	180K	2.7K	220	omit	omit	.01	.005	RS-3413
60	RS-5109	RS-5206	RS-5312	RS-5533	RS-5737	18K	47K	12K	18K	180K	2.7K	220	omit	omit	.01	.005	RS-3413
61	RS-5109	RS-5206	RS-5312	RS-5534	RS-5731	18K	47K	12K	18K	220K	1.8K	150	omit	omit	.01	.005	RS-3413
62	RS-5109	RS-5206	RS-5312	RS-5534	RS-5732	18K	47K	12K	18K	220K	1.8K	150	omit	omit	.01	.005	RS-3413
63	RS-5109	RS-5206	RS-5312	RS-5534	RS-5733	18K	47K	12K	18K	220K	1.8K	150	omit	omit	.01	.005	RS-3413
64	RS-5109	RS-5206	RS-5312	RS-5535	RS-5731	18K	47K	12K	18K	270K	1.8K	150	omit	omit	.01	.005	RS-3413
65	RS-5109	RS-5206	RS-5312	RS-5535	RS-5732	18K	47K	12K	18K	270K	1.8K	150	omit	omit	.01	.005	RS-3413
66	RS-5109	RS-5206	RS-5312	RS-5535	RS-5733	18K	47K	12K	18K	270K	1.8K	150	omit	omit	.01	.005	RS-3413

GENERAL ELECTRIC

MODELS C550A, B, C551A, B

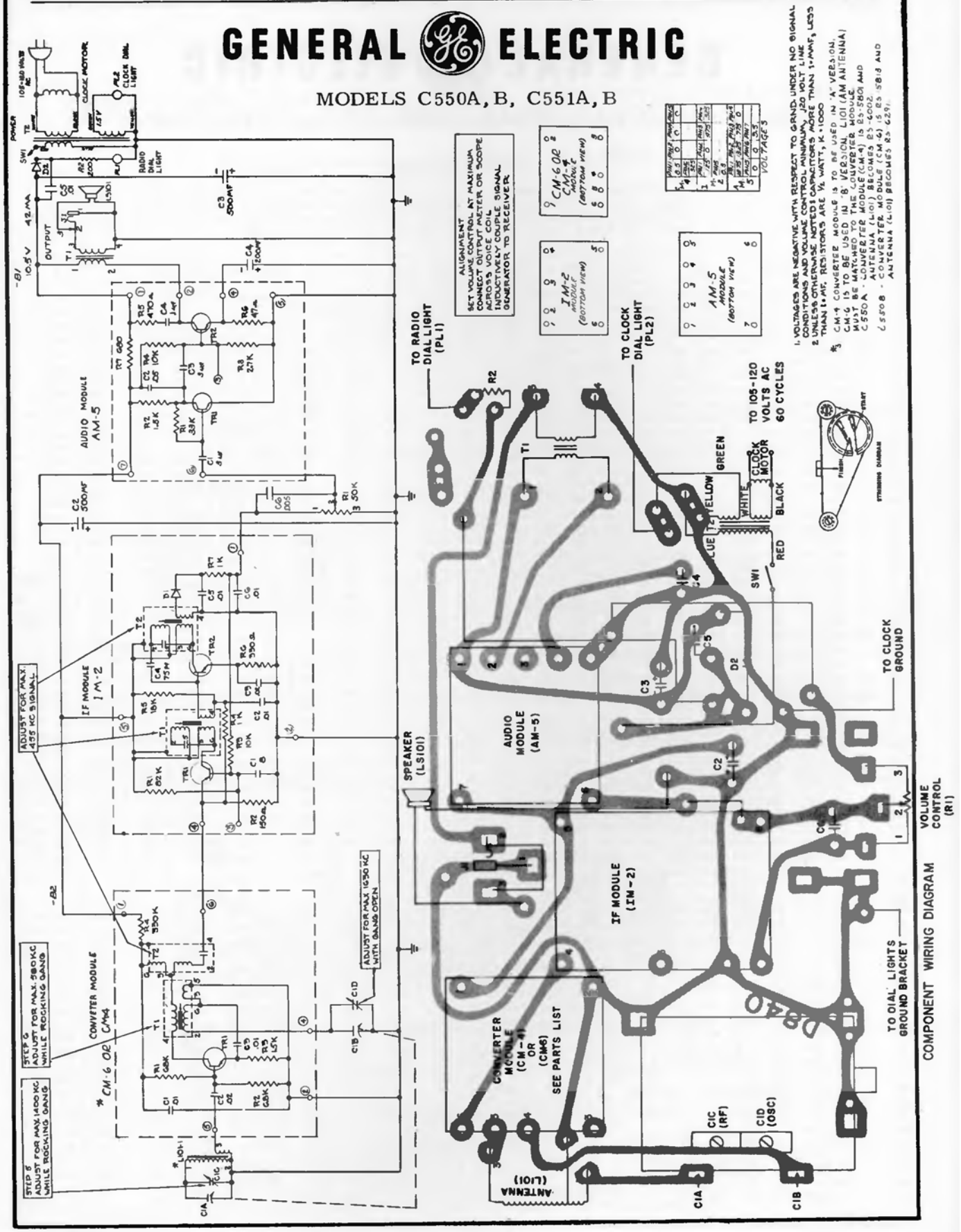

COMPONENT WIRING DIAGRAM

GENERAL ELECTRIC

MODEL P920A

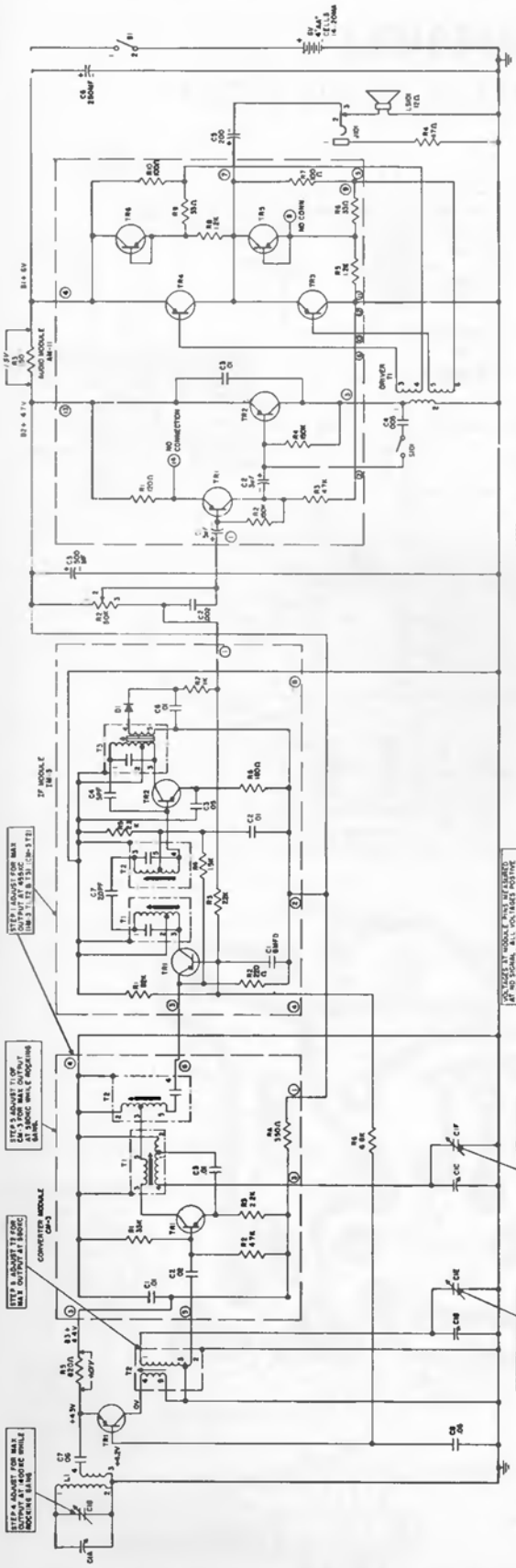

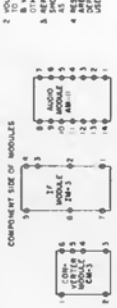

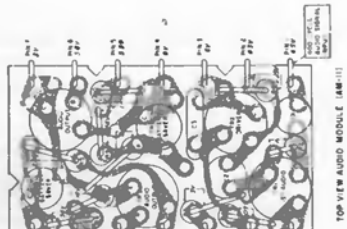

TOP VIEW AUDIO MODULE (AM-11)

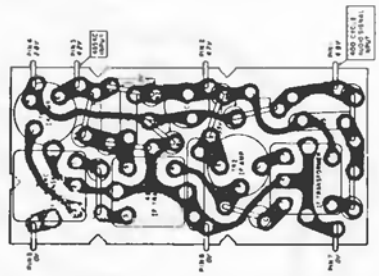

TOP VIEW IF MODULE (IM-3)

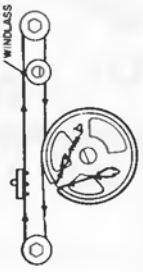

STRINGING DIAGRAM

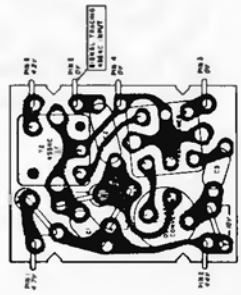

TOP VIEW CONVERTER (CM-3)

GENERAL ELECTRIC

Models RP2020A,-B, RP2021, RP2100, RP2101, RP2108

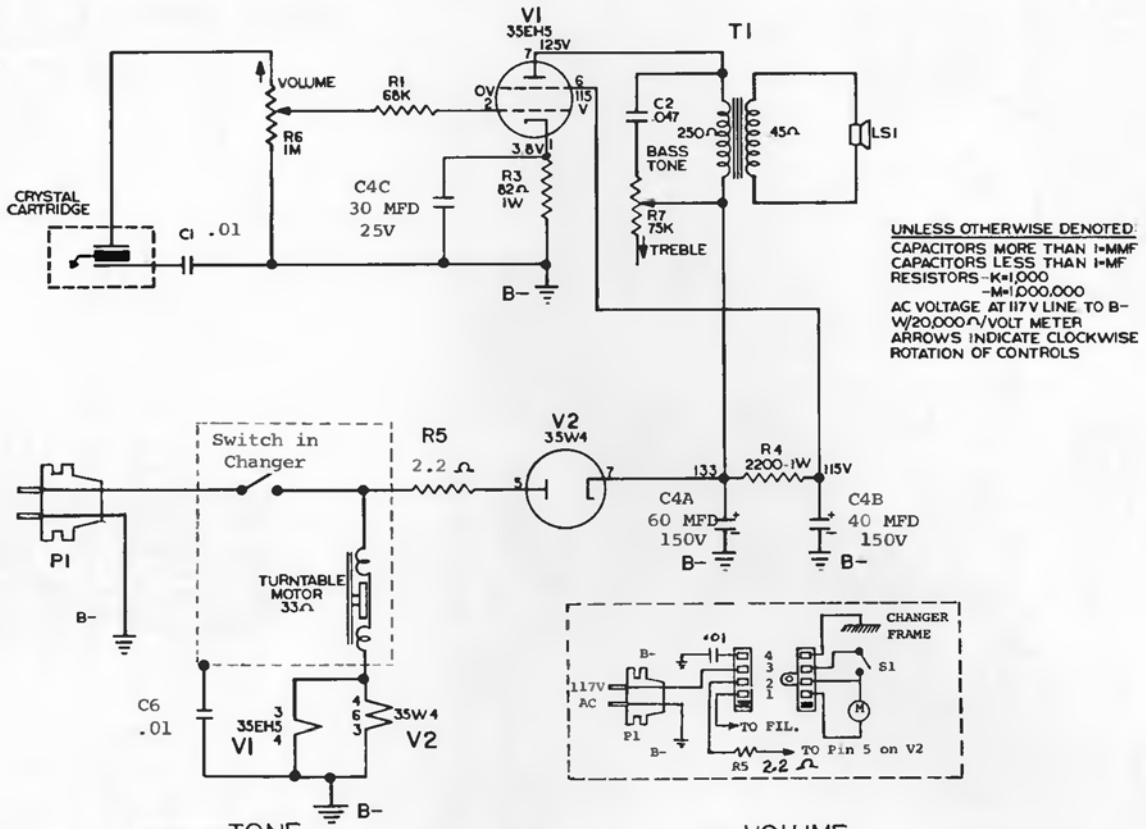

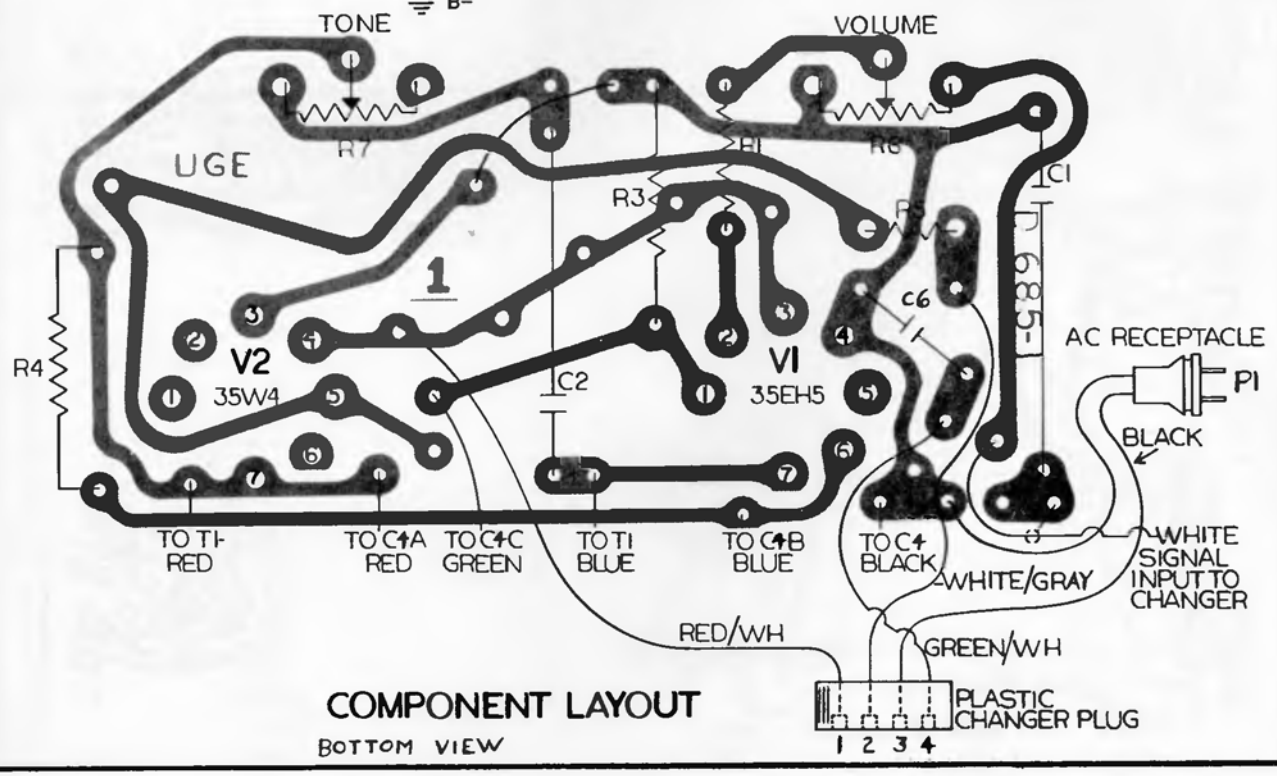

COMPONENT LAYOUT

BOTTOM VIEW

GENERAL ELECTRIC

Models RP2040A, RP2041A, RP2140, RP2142, RP2143

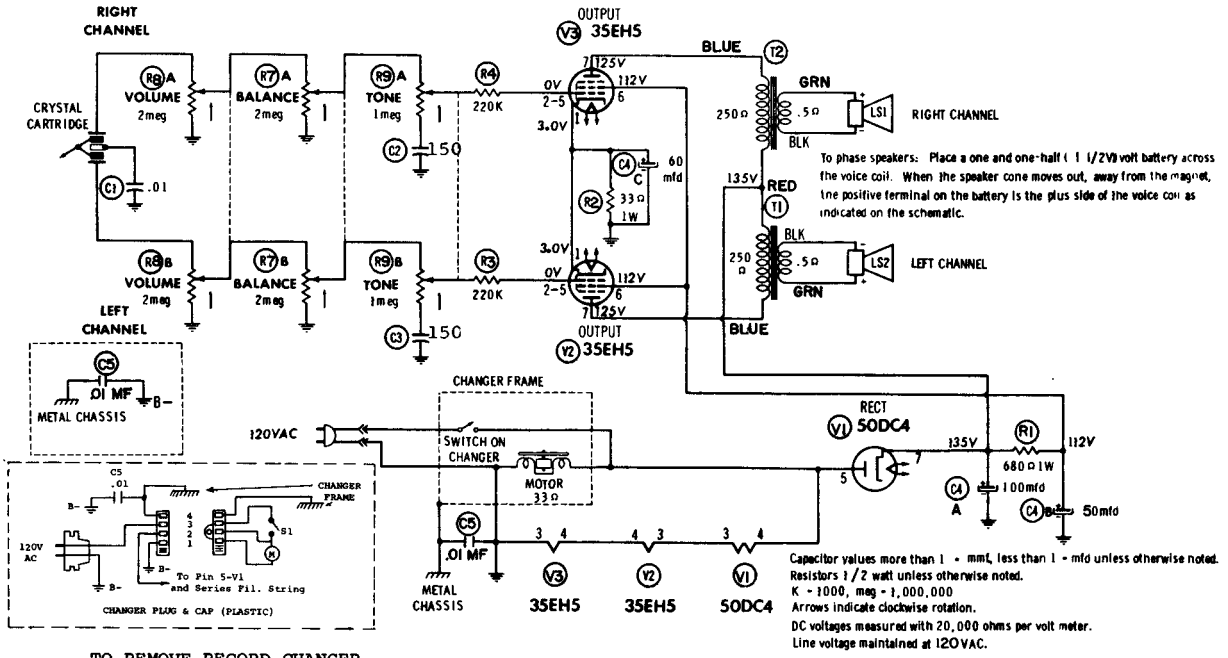

TO REMOVE RECORD CHANGER

1. Open record changer compartment and place record changer into playing position.
2. Remove two (2) screws from the back cover and remove back cover.
3. Place the shipping screw clips to a vertical position.
4. Lift the record changer and tilt upwards until the plastic power plug and signal plugs are accessible. Remove plugs from record changer.
5. Remove record changer from compartment.

TO REMOVE AMPLIFIER

1. Follow Steps 1 through 4 as described under "TO REMOVE RECORD CHANGER".
2. Remove knobs from control panel.
3. Free all wires from the metal lead dresser tabs.
4. Slide the AC power receptacle from the bracket.
5. Remove tape and wire nuts connecting the speaker leads. Be sure to label speaker leads to assure proper phasing when reassembling.
6. Remove screw holding electrolytic.
7. Remove all tubes from amplifier.
8. Remove nuts holding amplifier to cabinet and remove amplifier.

TO REMOVE SPEAKER

1. Unclasp speaker wing clamp and swing out speaker enclosure.
2. Lift wing enclosure off hinges and place grille front on a soft cloth.
3. Remove six (6) screws from speaker enclosure back and remove back.
4. Unsolder and label speaker leads to assure proper phasing when reassembling.
5. Remove nuts holding speaker to grille and remove speaker.

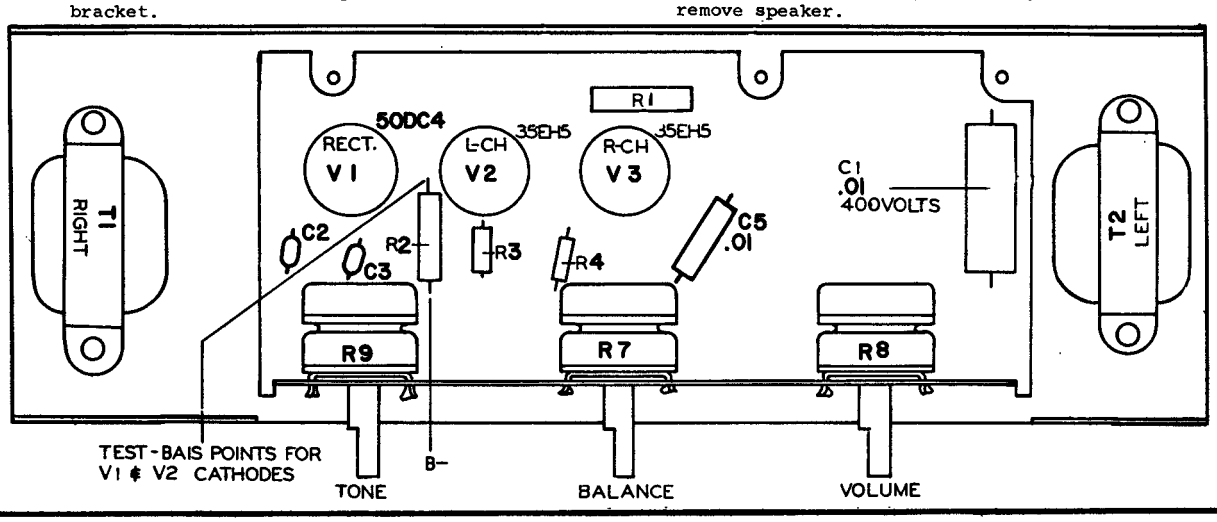

GENERAL ELECTRIC

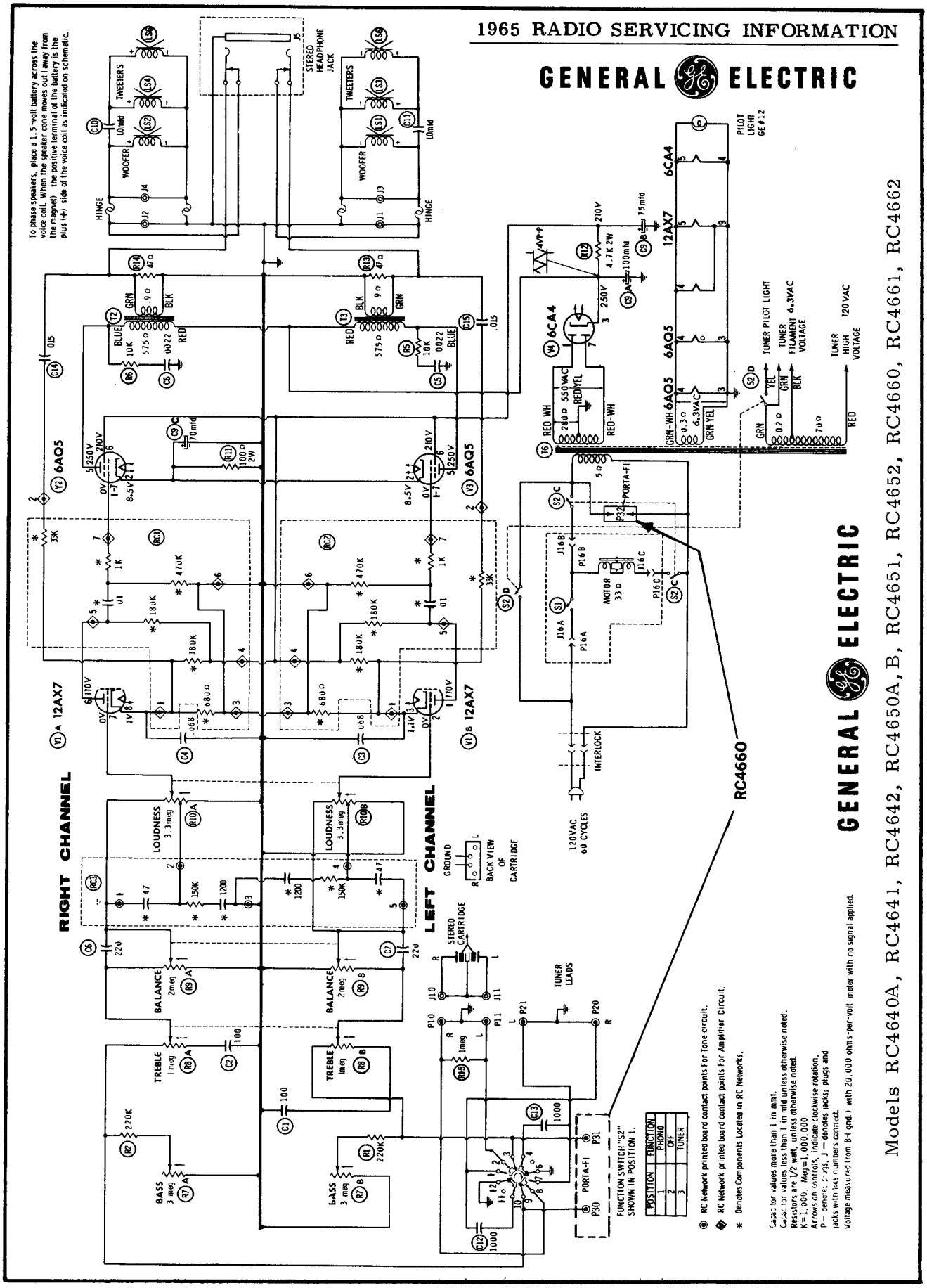

GENERAL ELECTRIC

(Continued on pages 46-47)

TU222 AM-FM FM STEREO TUNERS

TU222-1
TU222-2
TU222-3
TU222-5
TU222-8
TU222-9
TU222-10
TU222-11
TU222-12

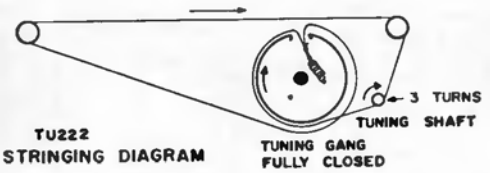

TU222 STRINGING DIAGRAM

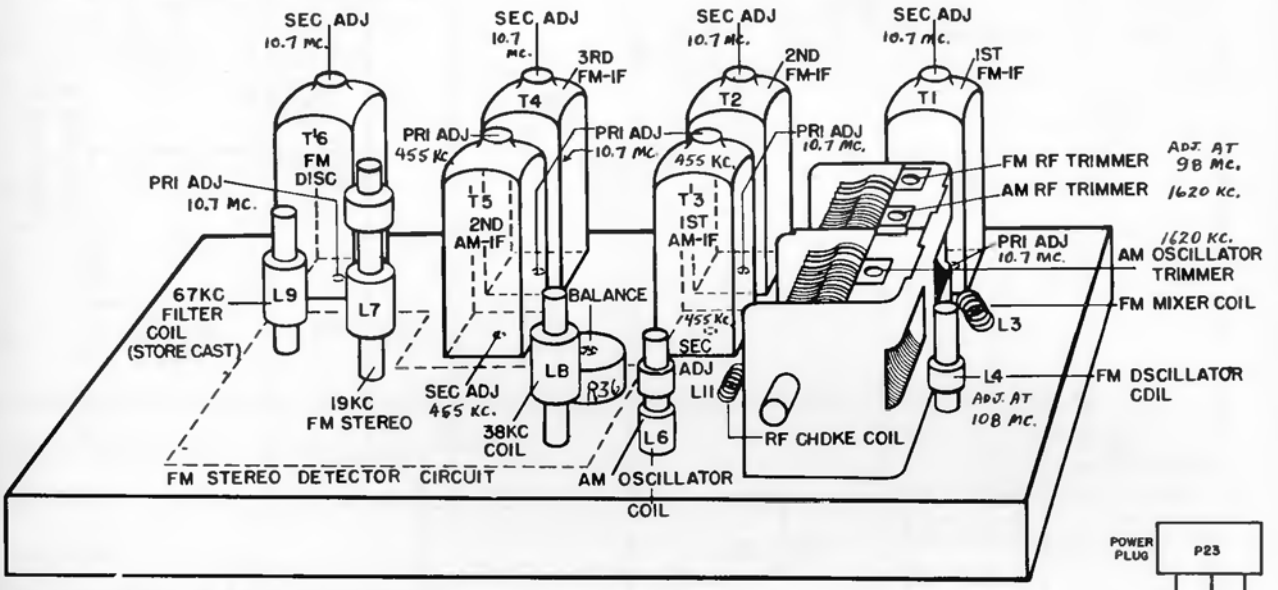

ALIGNMENT POINT LOCATIONS
TOP VIEW

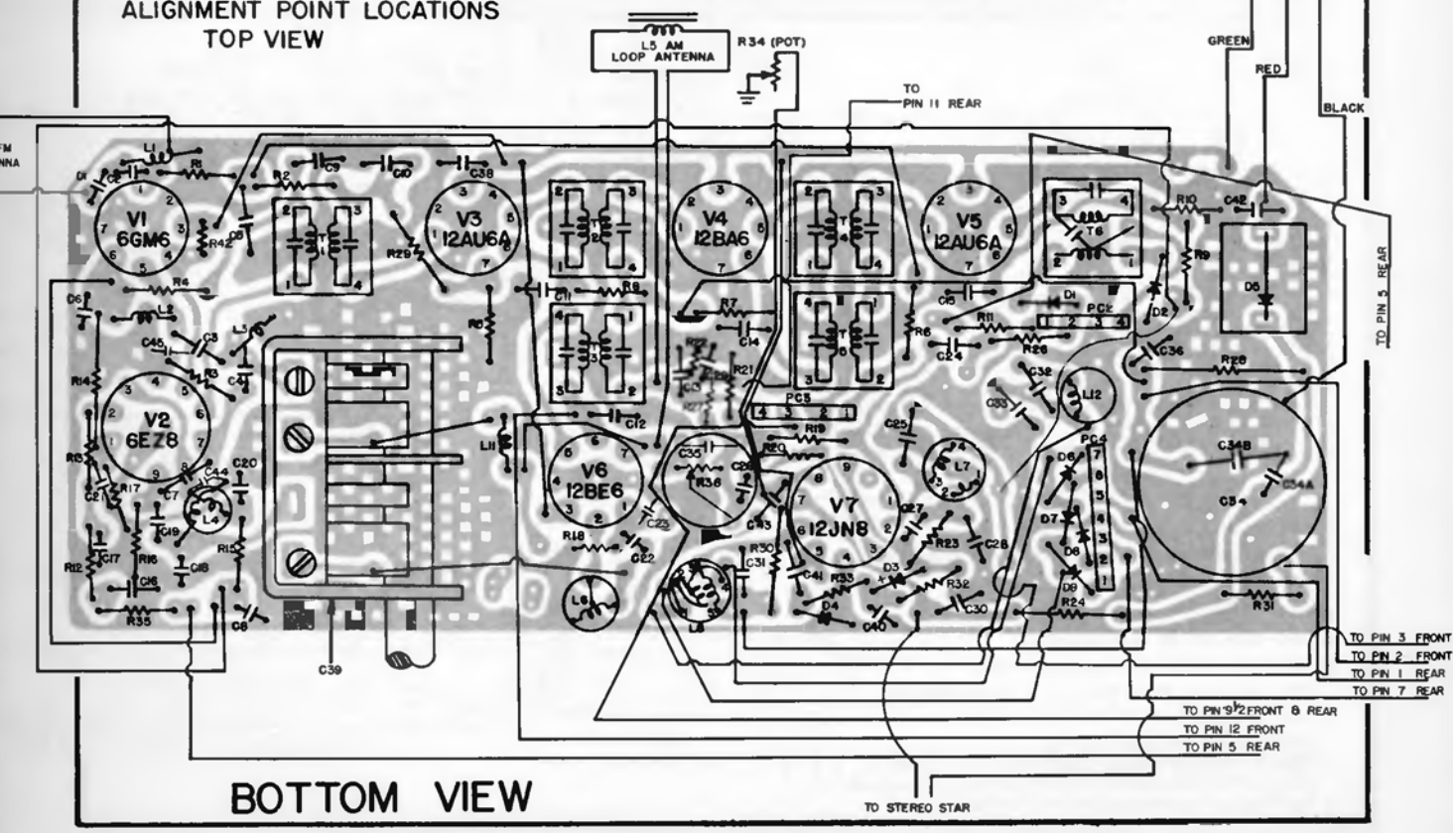

BOTTOM VIEW

GENERAL ELECTRIC TU222 AM-FM Tuner Diagram

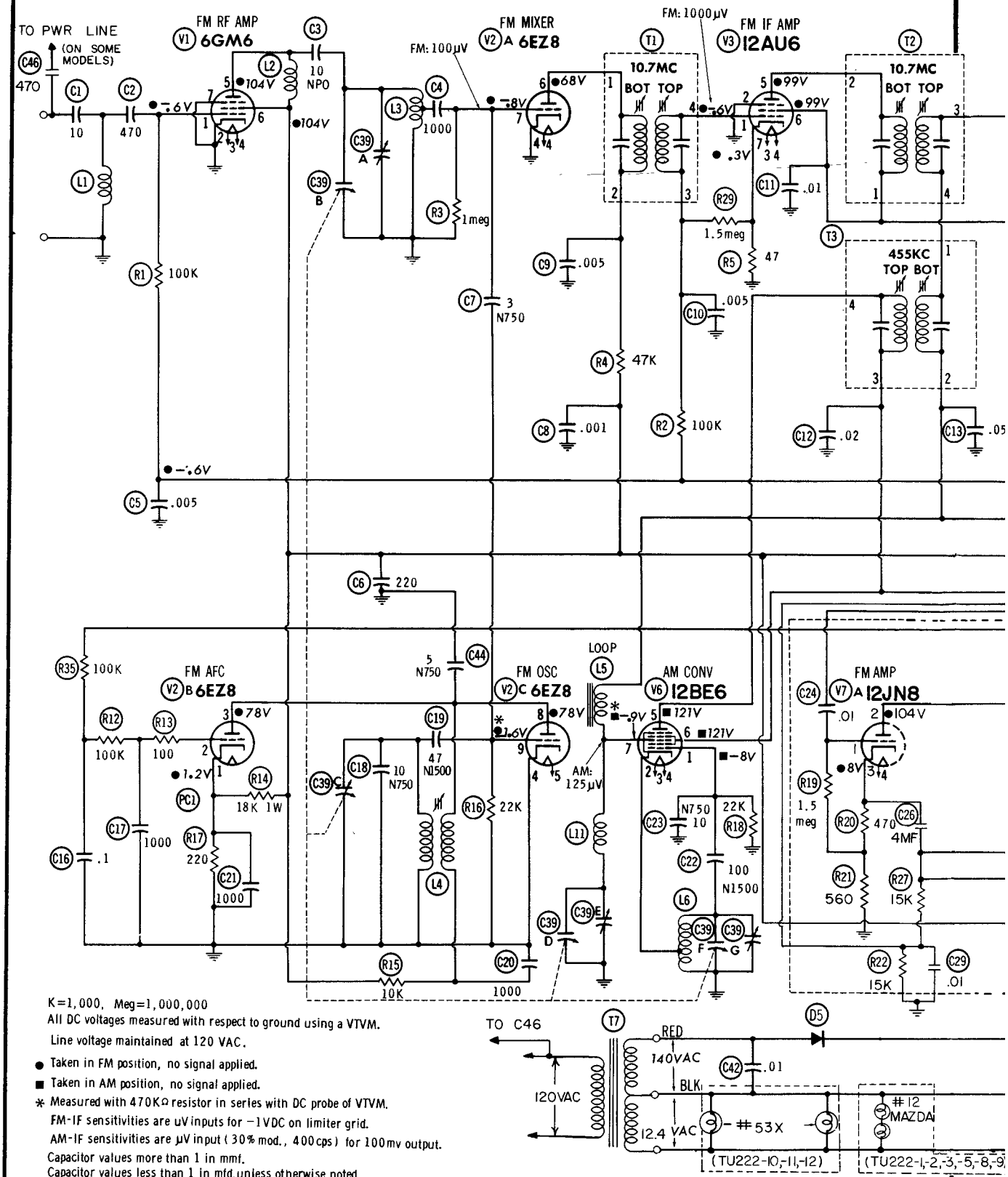

K=1,000, Meg=1,000,000
All DC voltages measured with respect to ground using a VTVM.
Line voltage maintained at 120 VAC.

● Taken in FM position, no signal applied.
■ Taken in AM position, no signal applied.
* Measured with 470KΩ resistor in series with DC probe of VTVM.
FM-IF sensitivities are uV inputs for −1VDC on limiter grid.
AM-IF sensitivities are μV input (30% mod., 400cps) for 100mv output.
Capacitor values more than 1 in mmf.
Capacitor values less than 1 in mfd, unless otherwise noted.
Resistors are 10%, 1/2 watt, unless otherwise noted.
▲ Approximate value when receiving FM Stereo station.

GENERAL ELECTRIC TU222 AM-FM Tuners, Continued

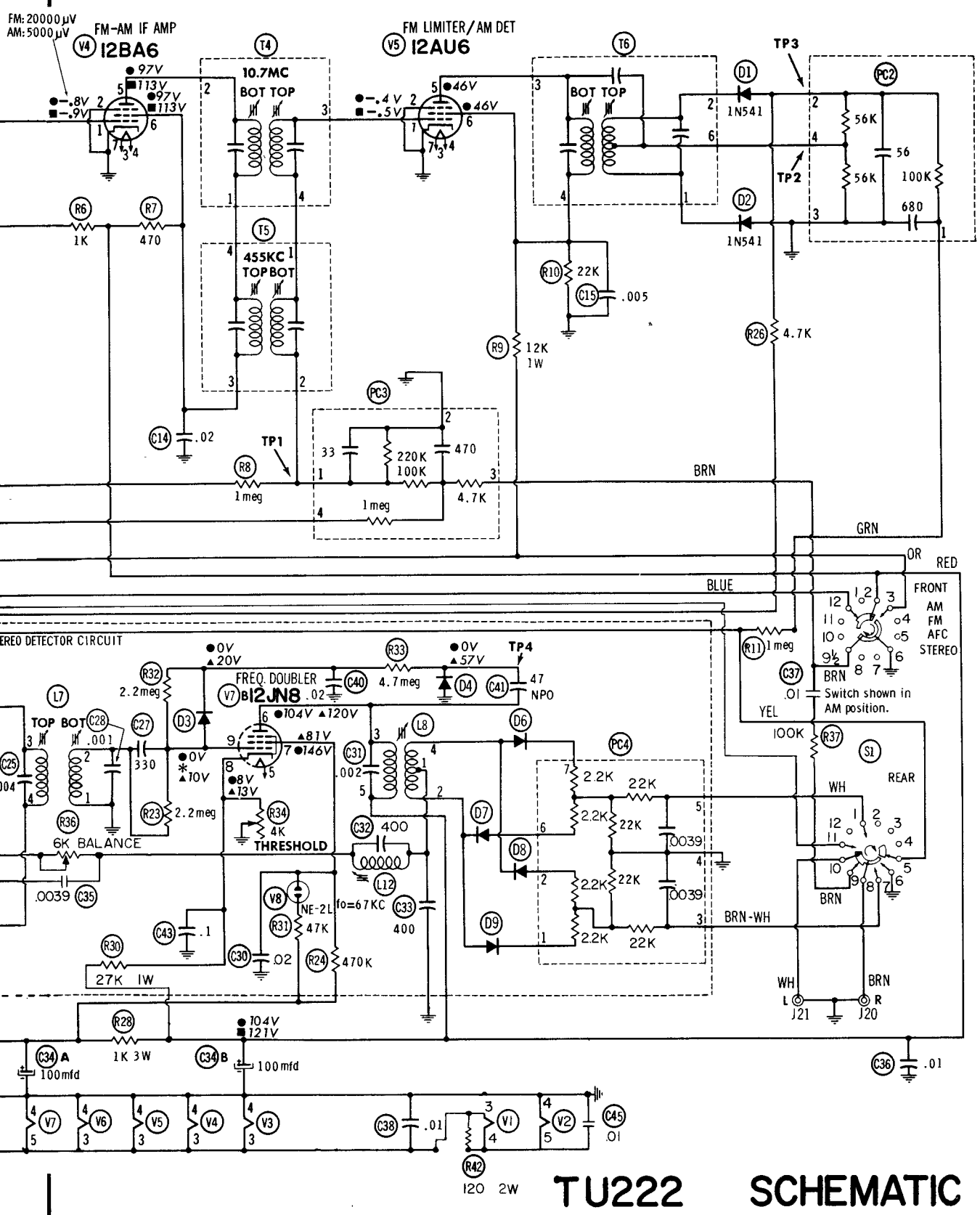

TU222 SCHEMATIC

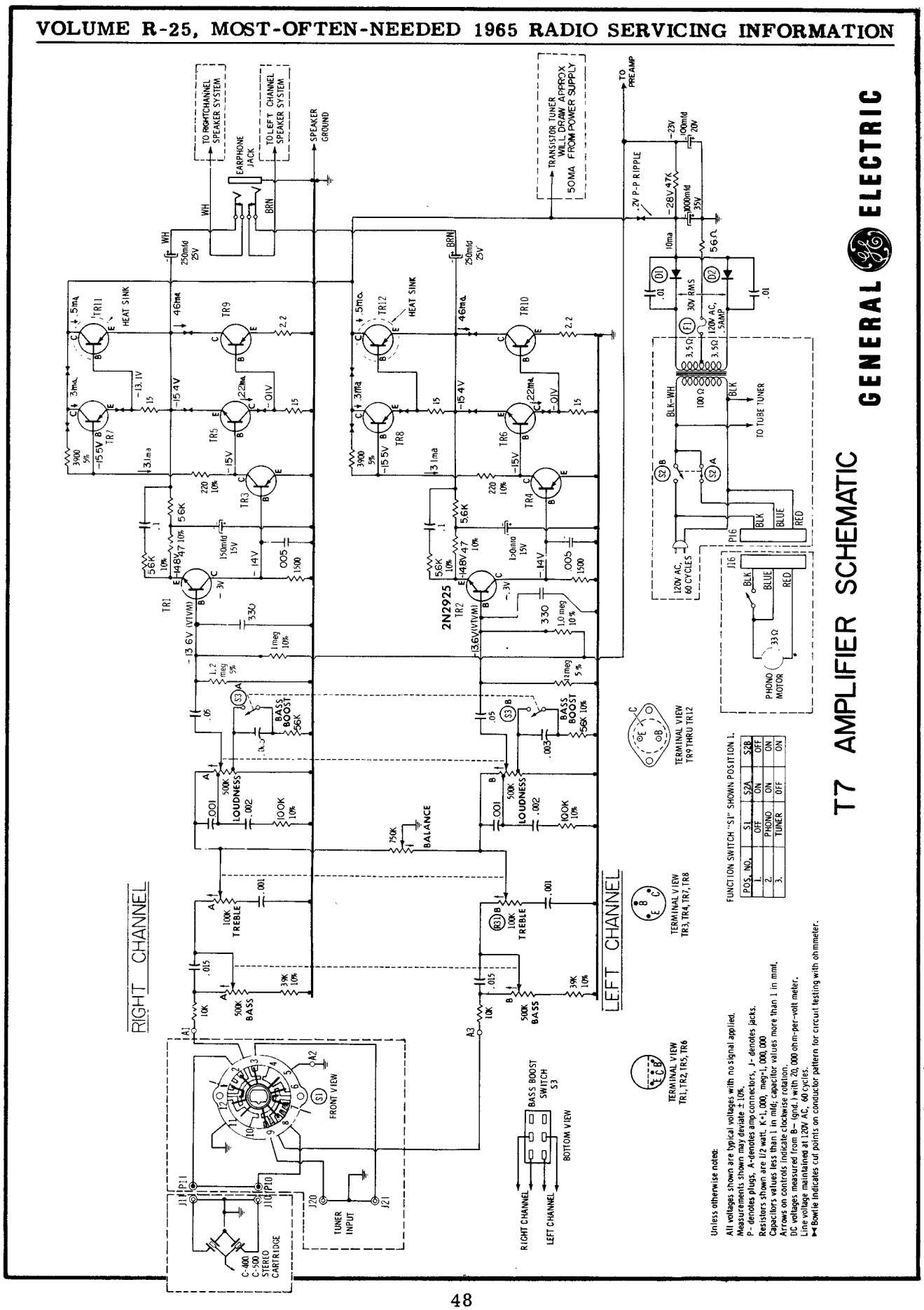
T7 AMPLIFIER SCHEMATIC
GENERAL ELECTRIC
RIGHT CHANNEL
LEFT CHANNEL
TO RIGHT CHANNEL SPEAKER SYSTEM
TO LEFT CHANNEL SPEAKER SYSTEM
EARPHONE JACK
SPEAKER GROUND
TRANSISTOR TUNER WILL DRAW APPROX 50MA FROM POWER SUPPLY
TO PREAMP
.2V P-P RIPPLE
HEAT SINK
2N2925
LOUDNESS
BASS BOOST
BALANCE
TREBLE
BASS
FRONT VIEW
BASS BOOST SWITCH S3
BOTTOM VIEW
RIGHT CHANNEL
LEFT CHANNEL
TUNER INPUT
C-400 C-500 STEREO CARTRIDGE
TO TUBE TUNER
120V AC, 60 CYCLES
PHONO MOTOR
TERMINAL VIEW TR9 THRU TR12
TERMINAL VIEW TR3, TR4, TR7, TR8
TERMINAL VIEW TR1, TR2, TR5, TR6
FUNCTION SWITCH "S1" SHOWN POSITION 1.
POS. NO. | S1 | S2A | S2B
1. | OFF | ON | OFF
2. | PHONO | ON | ON
3. | TUNER | OFF | ON
Unless otherwise noted:
All voltages shown are typical voltages with no signal applied.
Measurements shown may deviate ± 10%.
P- denotes plugs, A-denotes amp connectors, J- denotes jacks.
Resistors shown are 1/2 watt, K=1,000, meg=1,000,000
Capacitors values less than 1 in mfd; capacitor values more than 1 in mmf.
Arrows on controls indicate clockwise rotation.
DC voltages measured from B— (gnd.) with 20,000 ohm-per-volt meter.
Line voltage maintained at 120V AC, 60 cycles.
Bowtie indicates cut points on conductor pattern for circuit testing with ohmmeter.

Hitachi, Ltd. MODEL TH-600

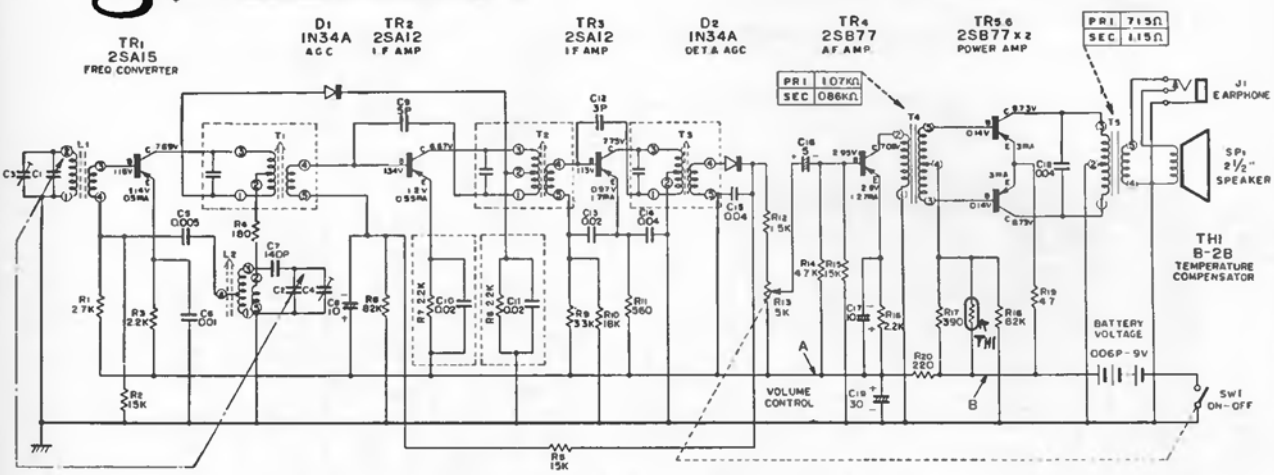

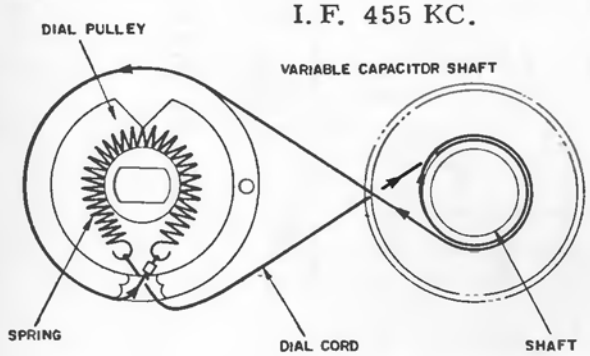

The printed circuit board may be removed after removing the back cover and two mounting screws of the printed circuit board shown in Fig.

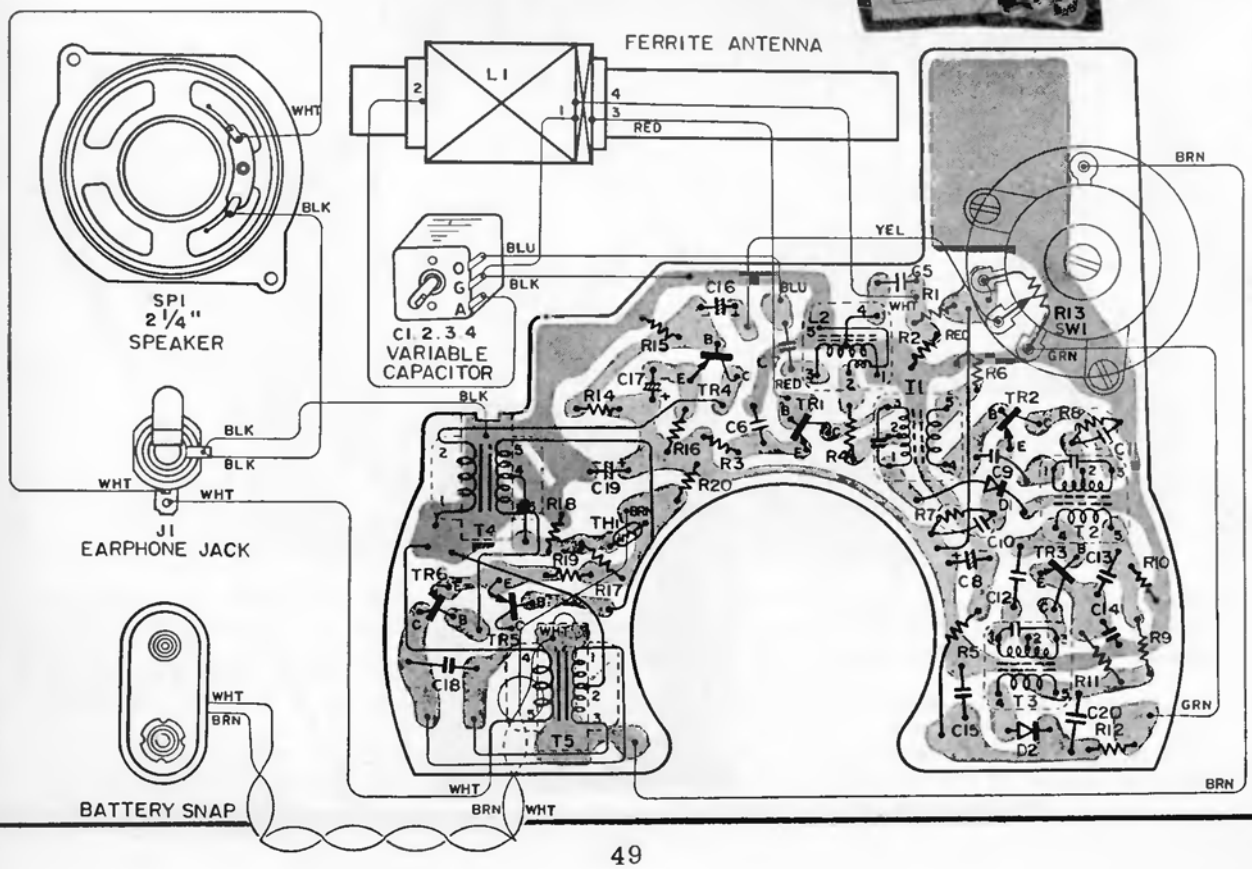

Hitachi, Ltd.

MODEL TH-812

(Continued on next page at right)

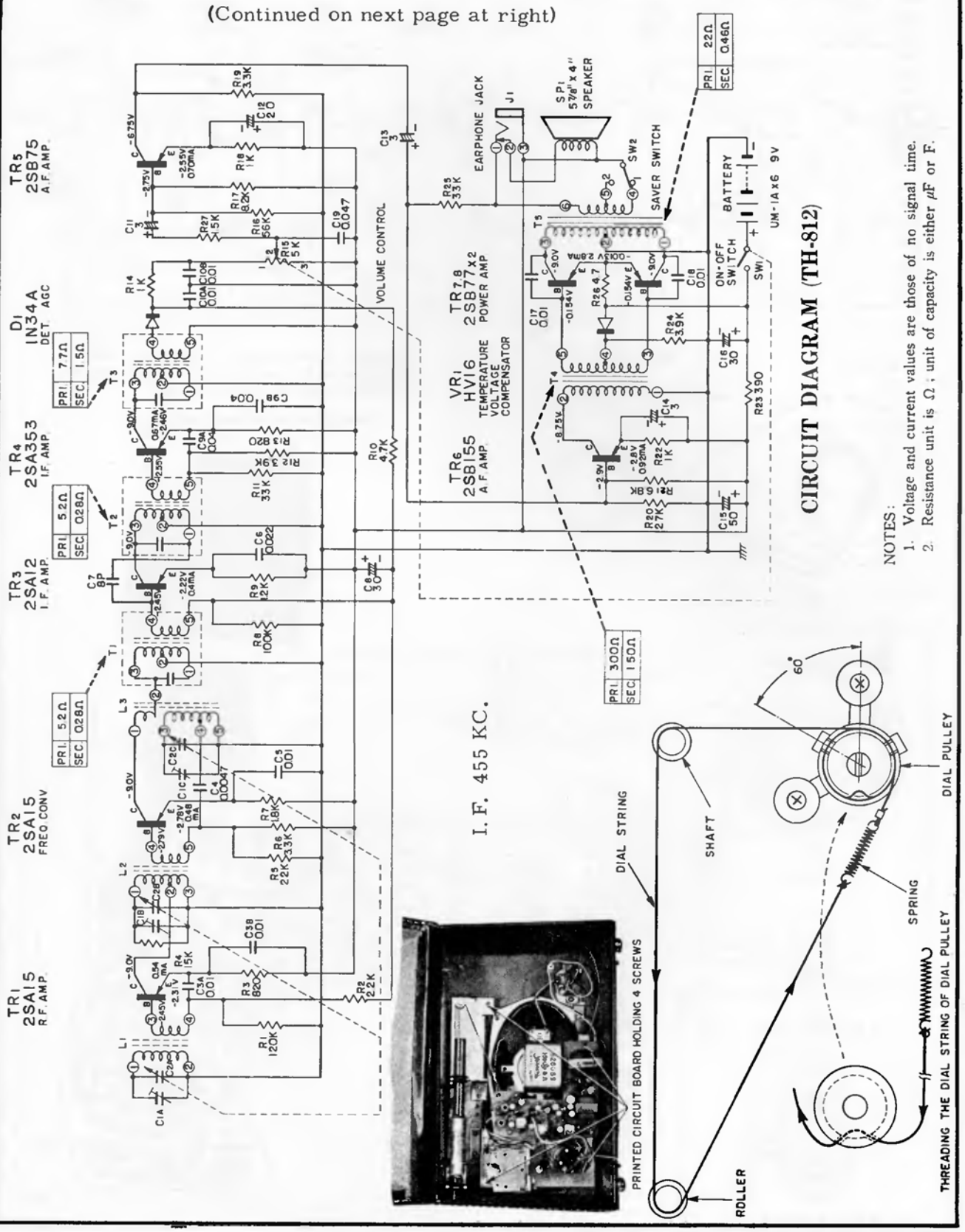

CIRCUIT DIAGRAM (TH-812)

NOTES:
1. Voltage and current values are those of no signal time.
2. Resistance unit is Ω ; unit of capacity is either μF or F.

HITACHI Model TH-812, Continued from page at left.

BOARD DIAGRAM

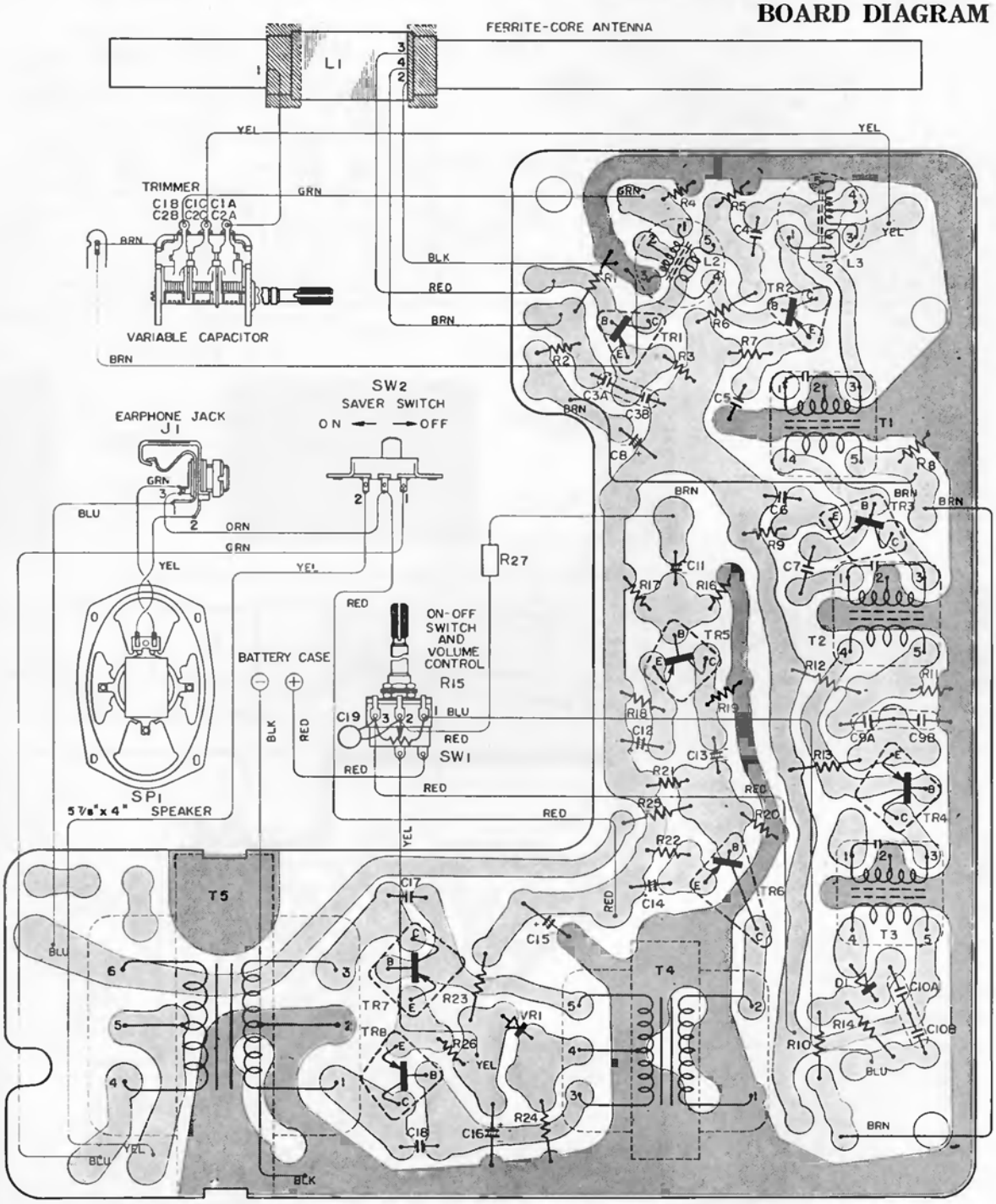

Signal tracing by injection of a signal from a signal generator is recommended as test procedure. The signal generator should be connected in series with a capacitor to avoid shorting out bias voltages. Of the transistors used in this receiver, the BASE is the signal input terminal (corresponding to signal grid of tubes), the COLLECTOR is the signal output terminal (corresponding to plate of tubes), and the EMITTER is the common terminal (corresponding to cathode of tubes),

The output circuit used in this receiver is of "Class-B" type. In "Class-B" output, the battery current increases greatly with increased signal input to the "Class-B" transistors.

Extreme care should be taken to avoid accidental shorting of transistor elements to circuit ground. This is especially true of the output transistors; if either BASE terminal is accidentally grounded for a few seconds, the output transistors will be permanently damaged.

Hitachi, Ltd. MODEL TH-848

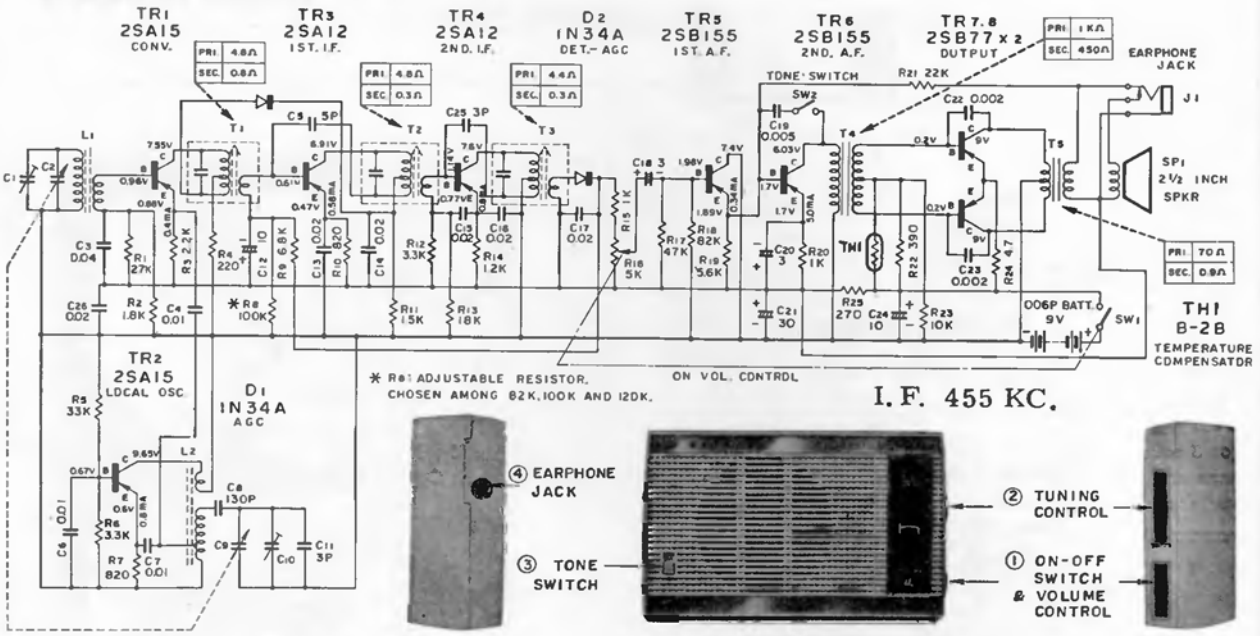

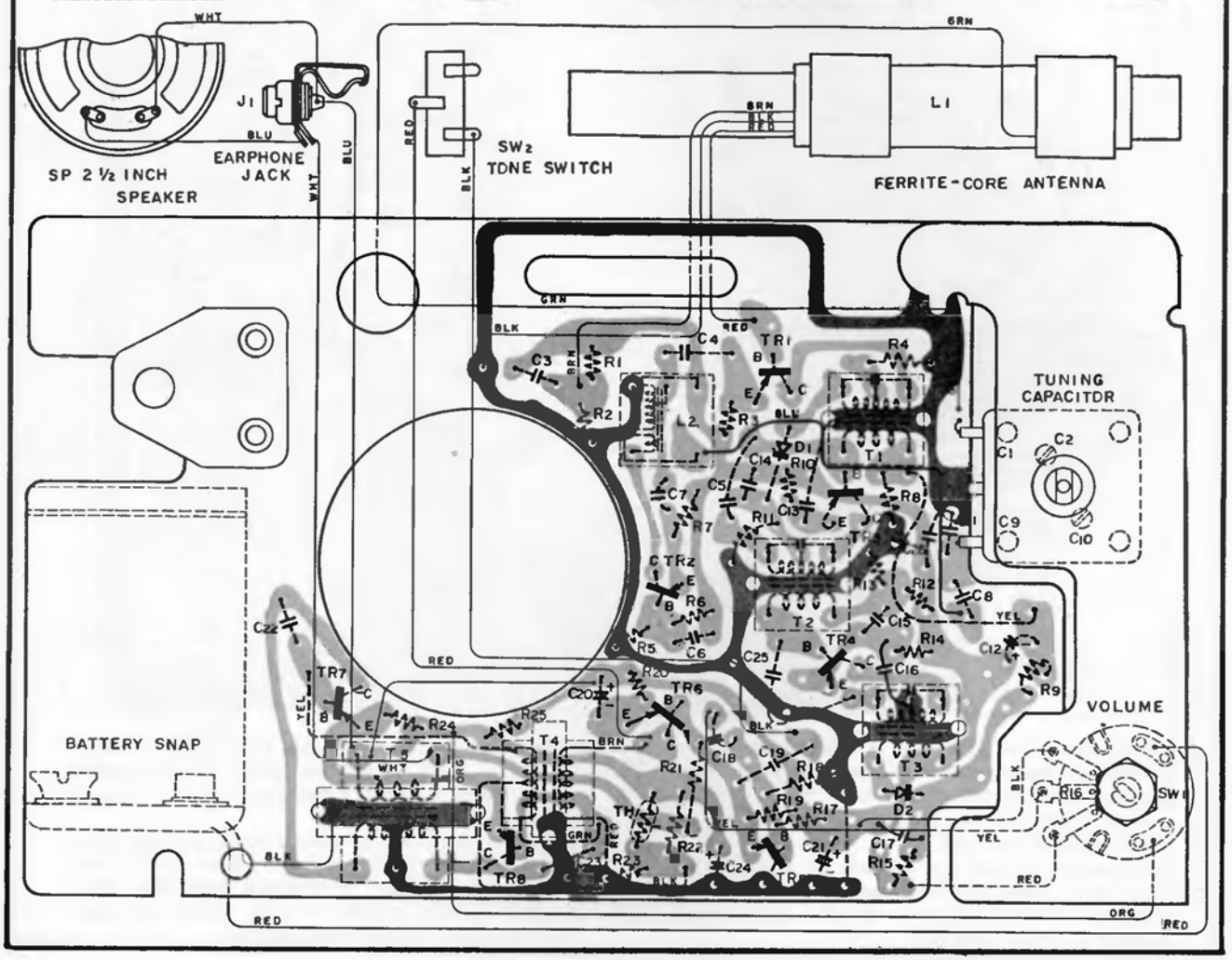

Magnavox

2AM-70 TRANSISTOR PORTABLE RADIO

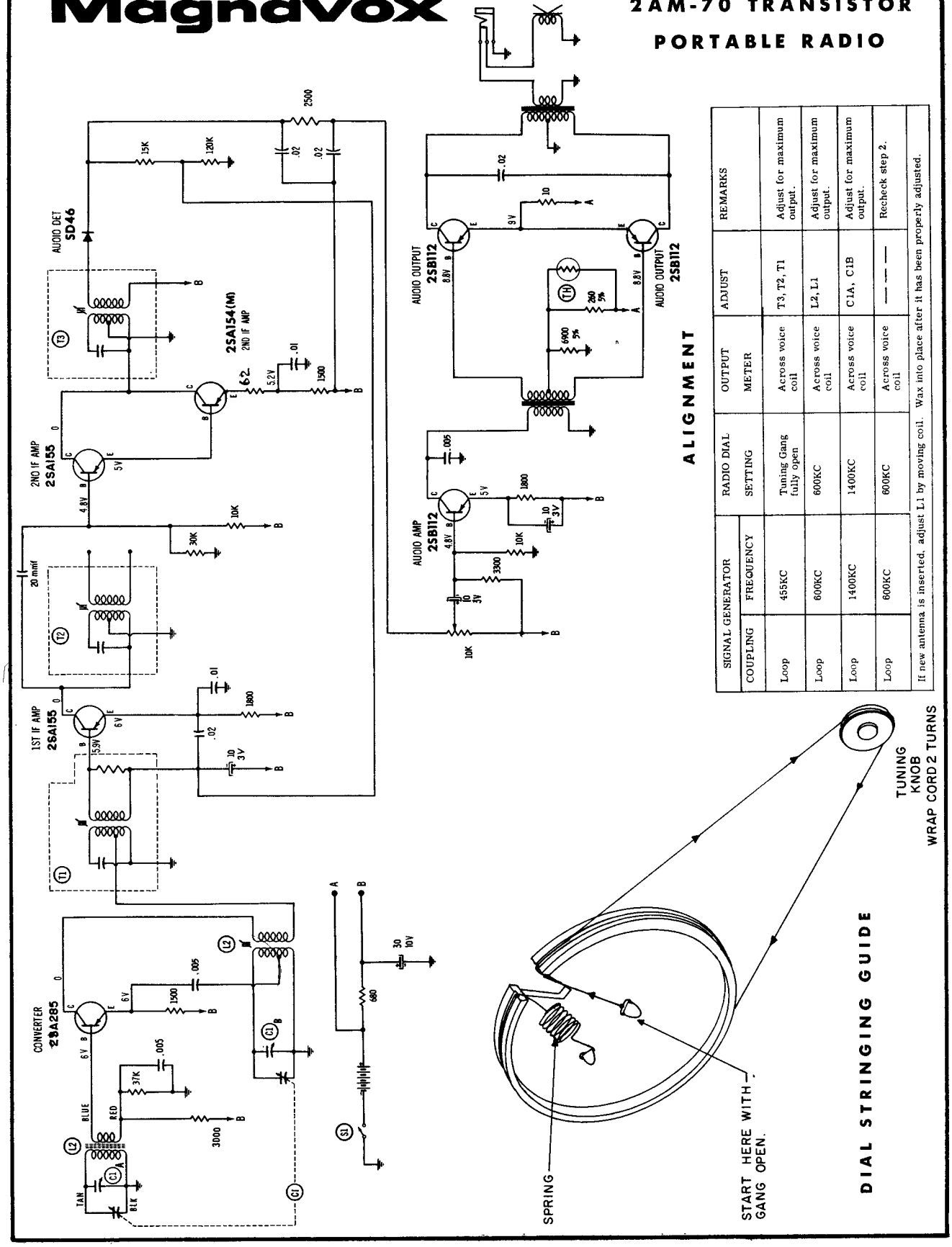

ALIGNMENT

SIGNAL GENERATOR		RADIO DIAL	OUTPUT	ADJUST	REMARKS
COUPLING	FREQUENCY	SETTING	METER		
Loop	455KC	Tuning Gang fully open	Across voice coil	T3, T2, T1	Adjust for maximum output.
Loop	600KC	600KC	Across voice coil	L2, L1	Adjust for maximum output.
Loop	1400KC	1400KC	Across voice coil	C1A, C1B	Adjust for maximum output.
Loop	600KC	600KC	Across voice coil	— — —	Recheck step 2.

If new antenna is inserted, adjust L1 by moving coil. Wax into place after it has been properly adjusted.

Magnavox

AM83 TRANSISTOR PORTABLE RADIO

(Continued on the next page, at right)

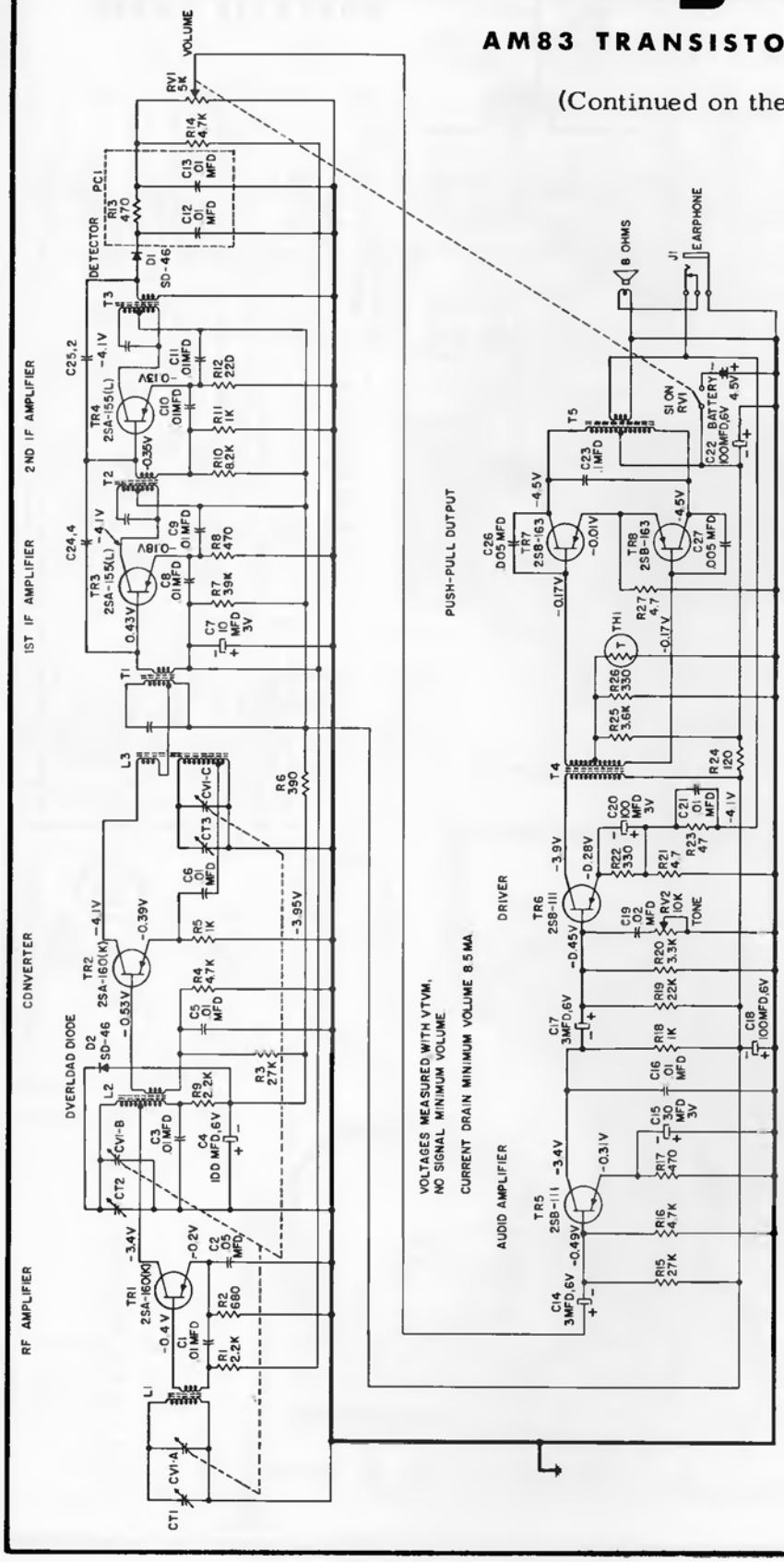

ALIGNMENT

Volume control should be adjusted at maximum position and Tone control at flat level. Output of signal generator should be no higher than necessary to obtain an output reading. Loosely couple generator to Receiver Antenna.

SIGNAL GENERATOR		RADIO DIAL	OUTPUT	ADJUST	REMARKS
COUPLING	FREQUENCY	SETTING	METER		
Loop	455KC	Tuning Gang fully open	Across voice coil	T3, T2, T1	Adjust for maximum output.
Loop	600KC	600KC	Across voice coil	L3, L2, L1	Adjust for maximum output.
Loop	1400KC	1400KC	Across voice coil	CT3, CT2, CT1	Adjust for maximum output.
Loop	600KC	600KC	Across voice coil	— — —	Recheck step 2.

If new antenna is inserted, adjust L1 by moving coil. Wax into place after it has been properly adjusted.

MAGNAVOX Model AM83, Continued from preceding page at left

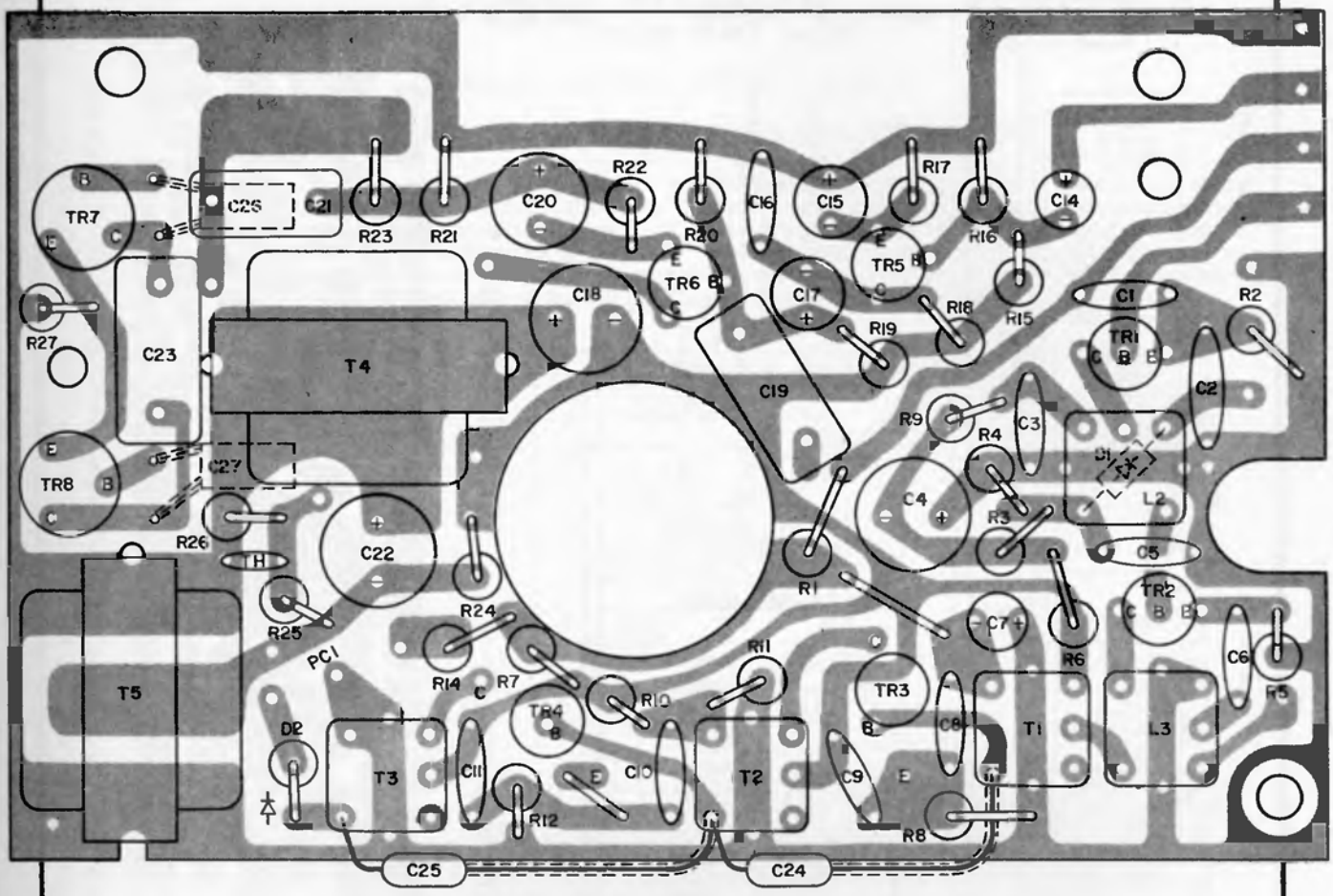

PRINTED WIRING AND COMPONENT PLACEMENT PATTERN
(VIEWED FROM PRINTED WIRING SIDE OF BOARD)

DIAL STRINGING GUIDE

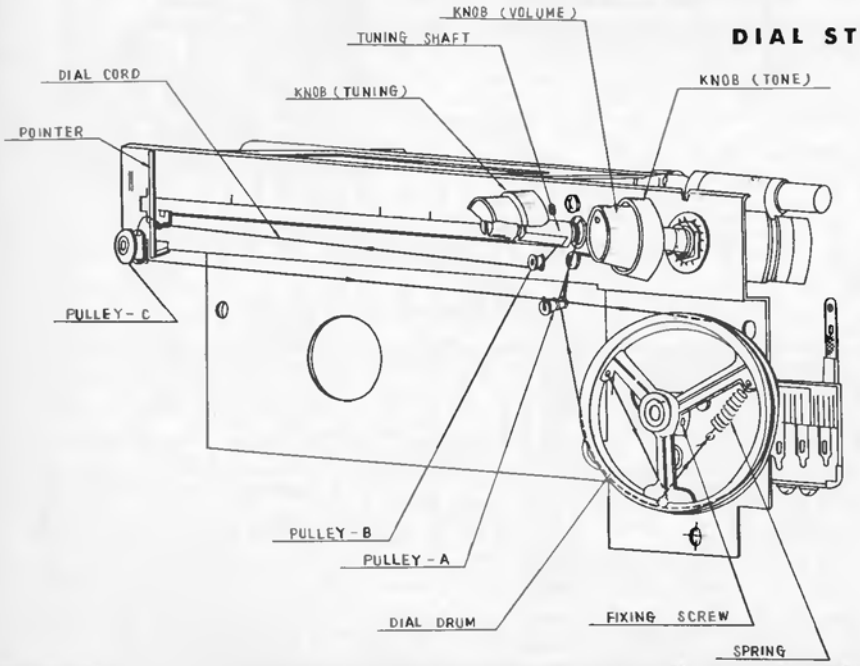

DIAL STRINGING GUIDE

1. STRING SHOULD BE PRE-STRETCHED APPROX. 1 % BEFORE BEING ASSEMBLED TO CHASSIS.
2. FIGURE SHOWS THE VARIABLE AIR CONDENSER FULLY CLOSED CONDITION.
3. FASTEN ONE END OF STRING TO DIAL DRUM.
4. NEXT WIND STRING 2 TURNS AROUND THE TUNING SHAFT THROUGH THE PULLEY-A.
5. REEL STRING ALONG PULLEYS ACCORDING TO THE ORDER AS SHOWN FIGURE: PULLEY NO. B-C-A.
6. WIND STRING ¾ TURNS ALONG THE GUTTER OF DIAL DRUM
7. FINALLY FASTEN THE OTHER END OF STRING TO THE SPRING. STRING SHOULD BE STRETCHED AS FULLY AS POSSIBLE.

MAGNAVOX
Model AM82 Radio

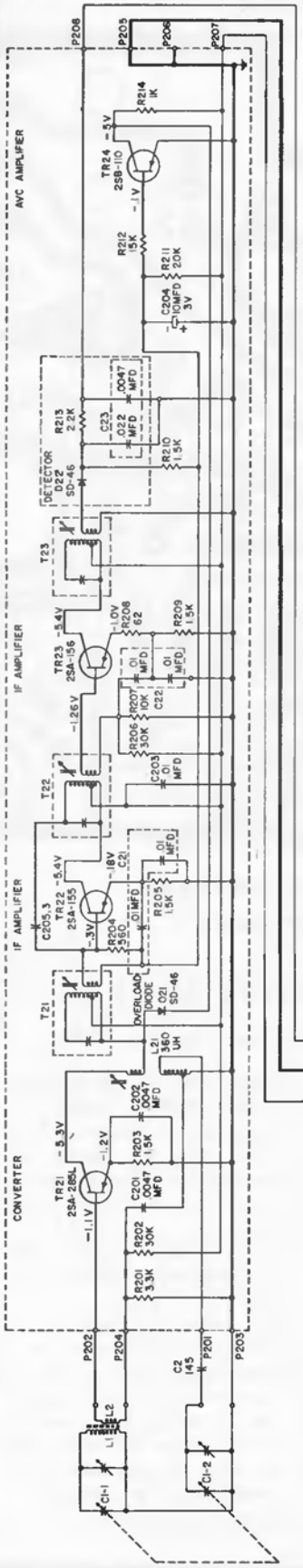

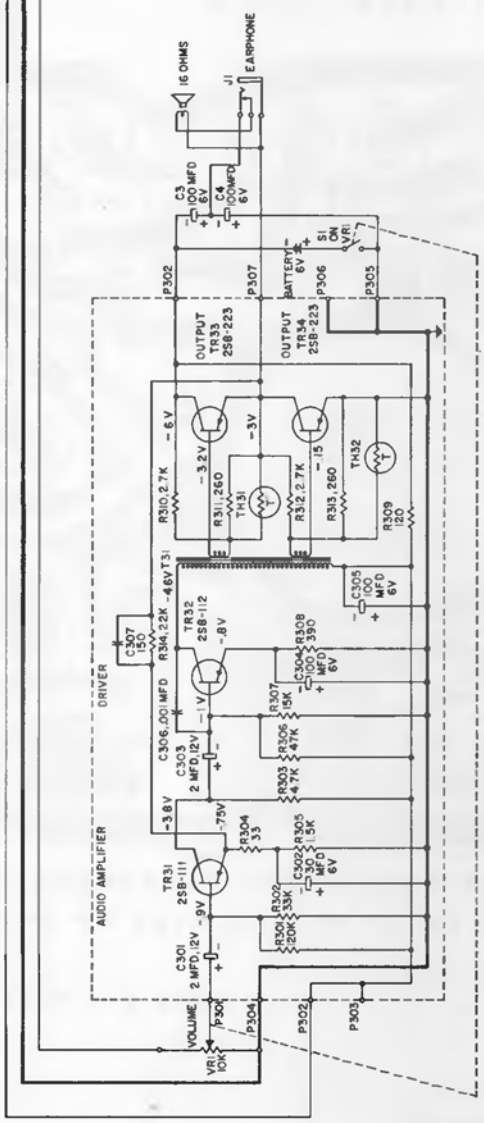

CURRENT DRAIN MINIMUM VOLUME 8 MA
20% TOLERANCE ON ALL READINGS.

VOLTAGE MEASURED WITH VTVM, NO SIGNAL
AND VOLUME CONTROL SET TO MINIMUM.

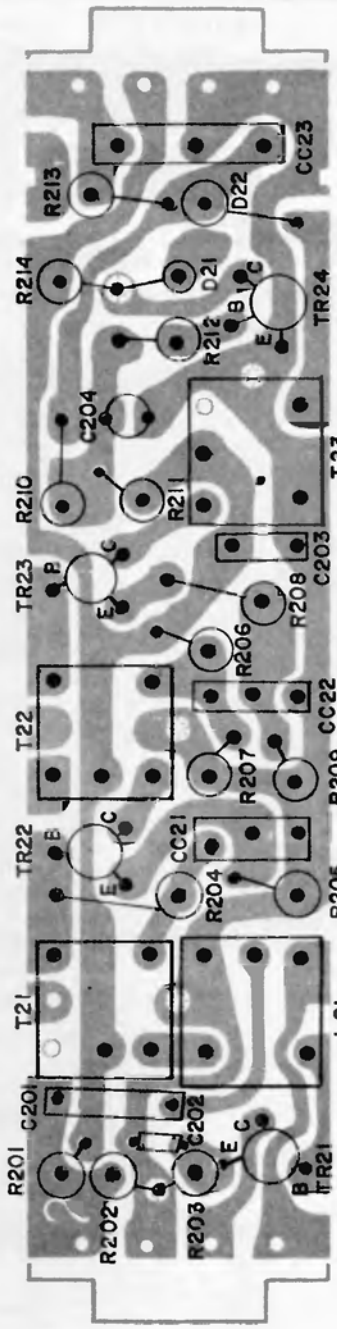

RF—IF PRINTED WIRING AND COMPONENT PLACEMENT PATTERN
(VIEWED FROM PRINTED WIRING SIDE OF BOARD)

ALIGNMENT

SIGNAL GENERATOR		RADIO DIAL	OUTPUT	ADJUST	REMARKS
COUPLING	FREQUENCY	SETTING	METER		
Loop	455KC	Tuning Gang fully open	Across voice coil	T23, T22, T21	Adjust for maximum output.
Loop	600KC	600KC	Across voice coil	L21, L1	Adjust for maximum output.
Loop	1400KC	1400KC	Across voice coil	C1-1, C1-2	Adjust for maximum output.
Loop	600KC	600KC	Across voice coil	— — —	Recheck step 2.

If new antenna is inserted, adjust L1 by moving coil. Wax into place after it has been properly adjusted.

Magnavox R207 AM/FM RADIO TUNER

MODELS 2ST686, 2ST687, 2ST690

(Material below and continued on the next three pages)

The R207 Series chassis are AM-FM tuners using transistors throughout the entire circuit. These tuners are designed to operate in conjunction with an external audio amplifier which also provides the DC voltage necessary to operate the tuner. This DC voltage is dropped from a -31 VDC and regulated at -16VDC.

The Sensitivity Control (R403) is used to adjust the point at which the diodes cut off. To set this control, tune the receiver off station and adjust this control clockwise until the background noise just disappears. For reception of weak stations, it may be necessary to reduce this setting slightly.

DIAL STRINGING GUIDE

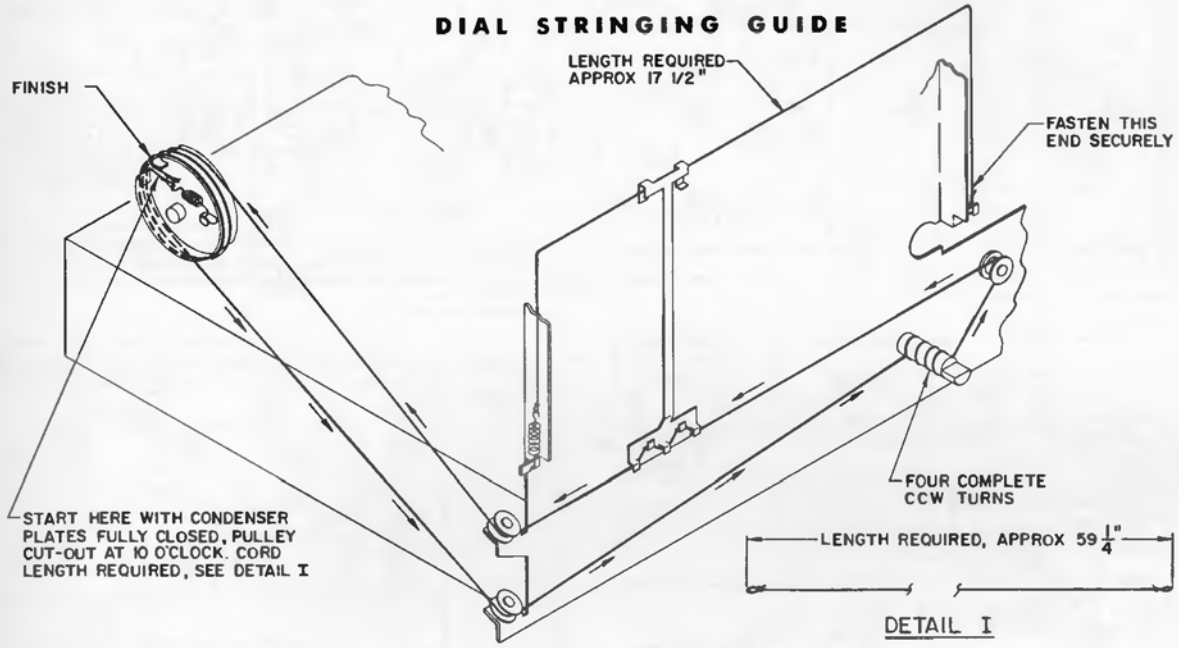

AM-FM-IF BOARD (BOTTOM VIEW)

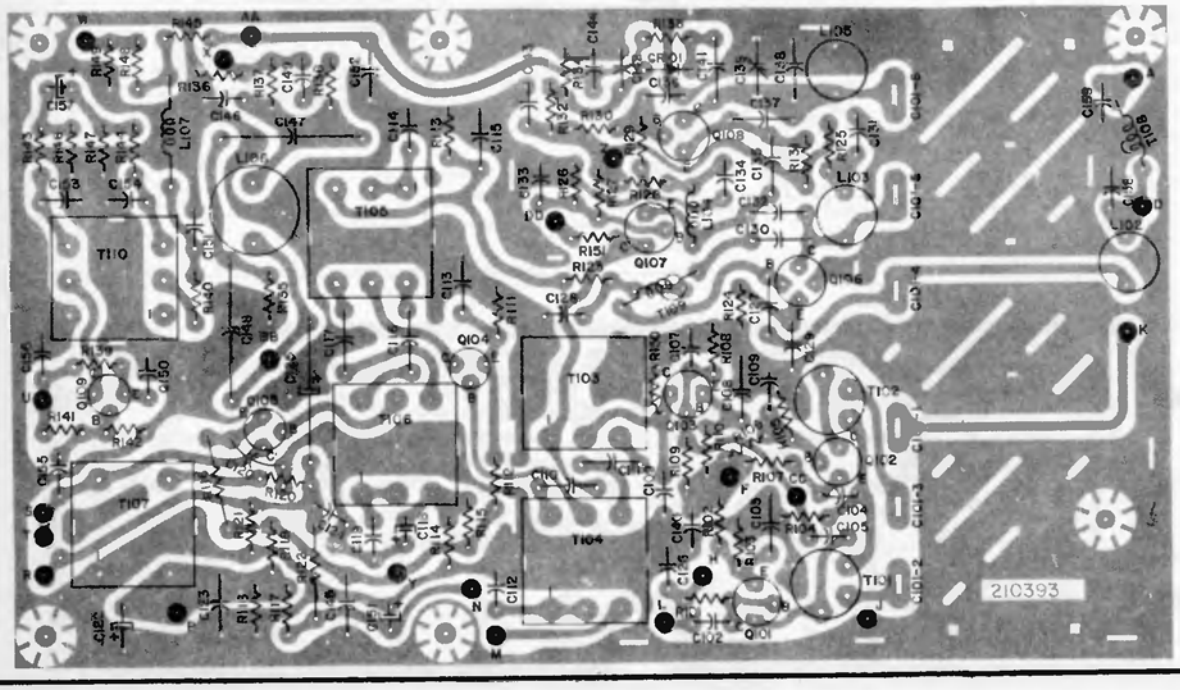

MAGNAVOX R207 Tuner Diagram

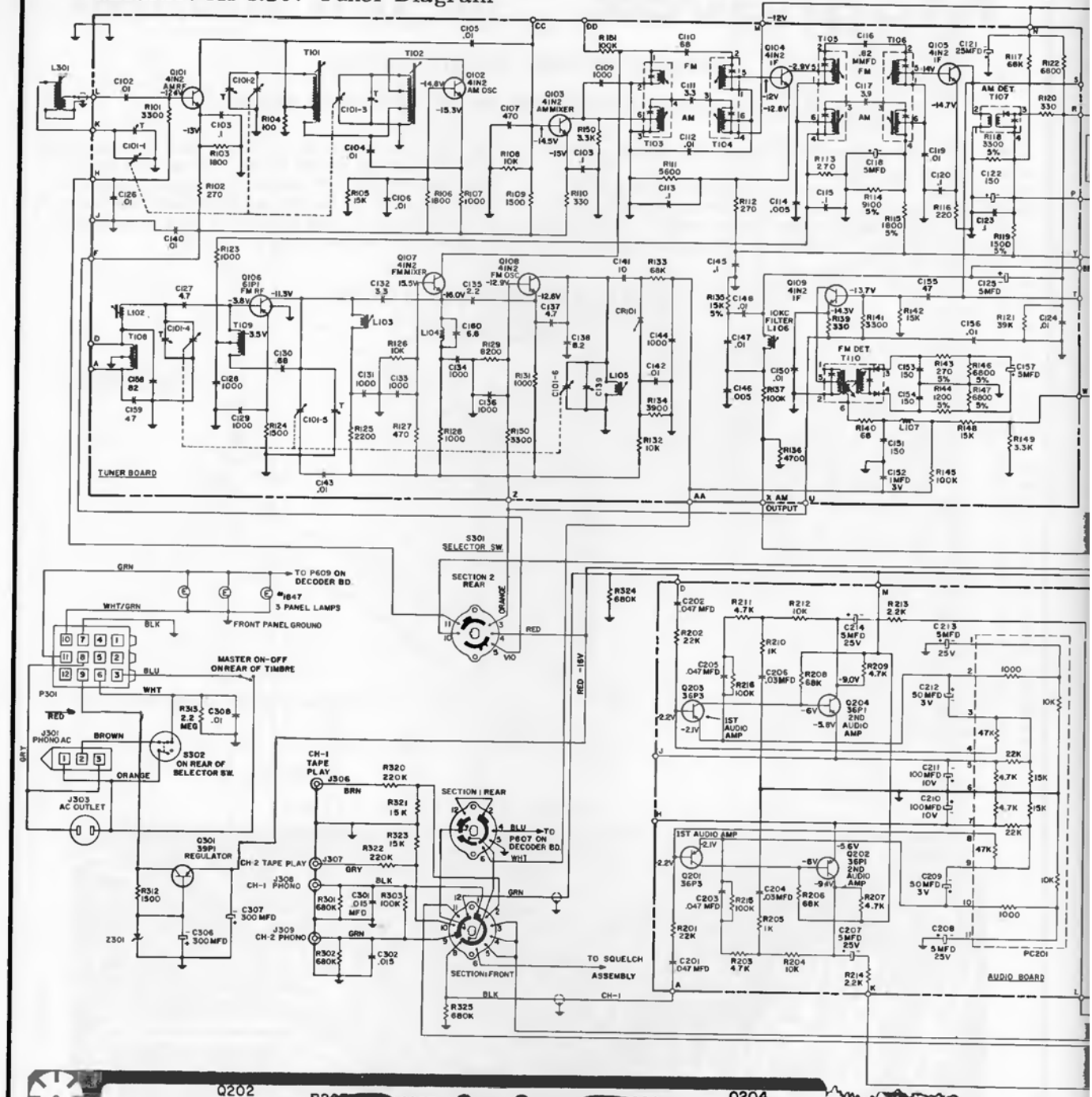

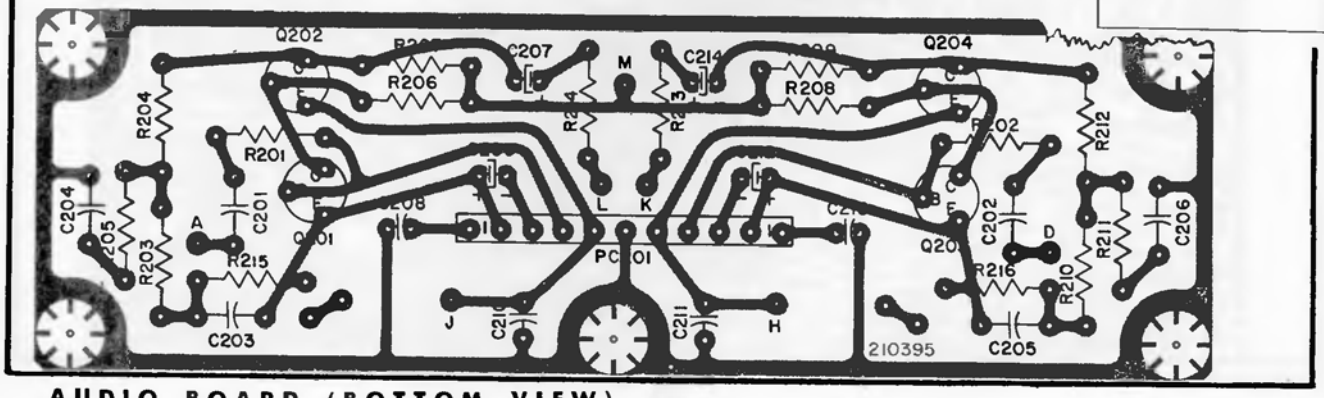

AUDIO BOARD (BOTTOM VIEW)

MAGNAVOX R207 Tuner Diagram

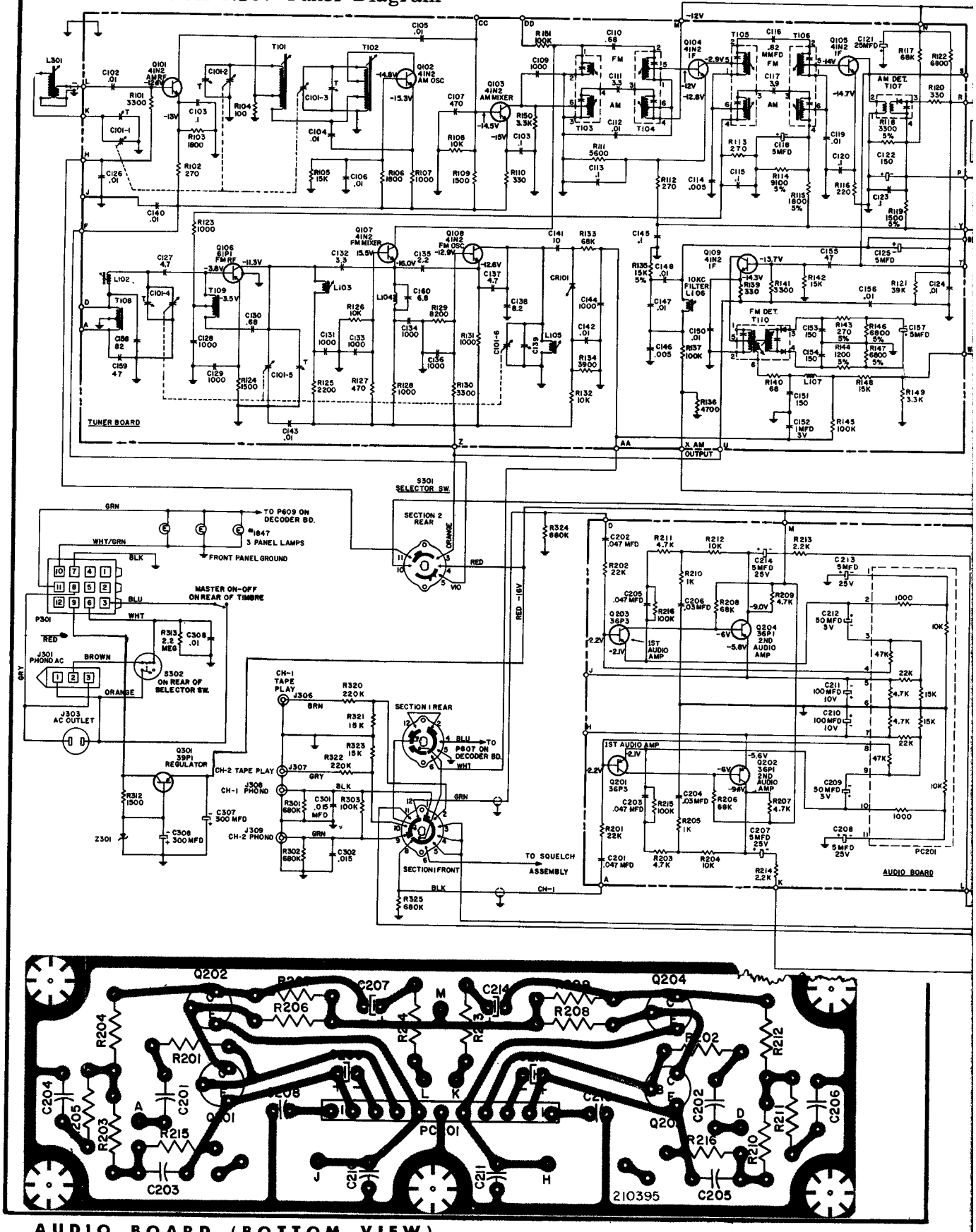

AUDIO BOARD (BOTTOM VIEW)

MAGNAVOX R207 Tuner Diagram, Continued

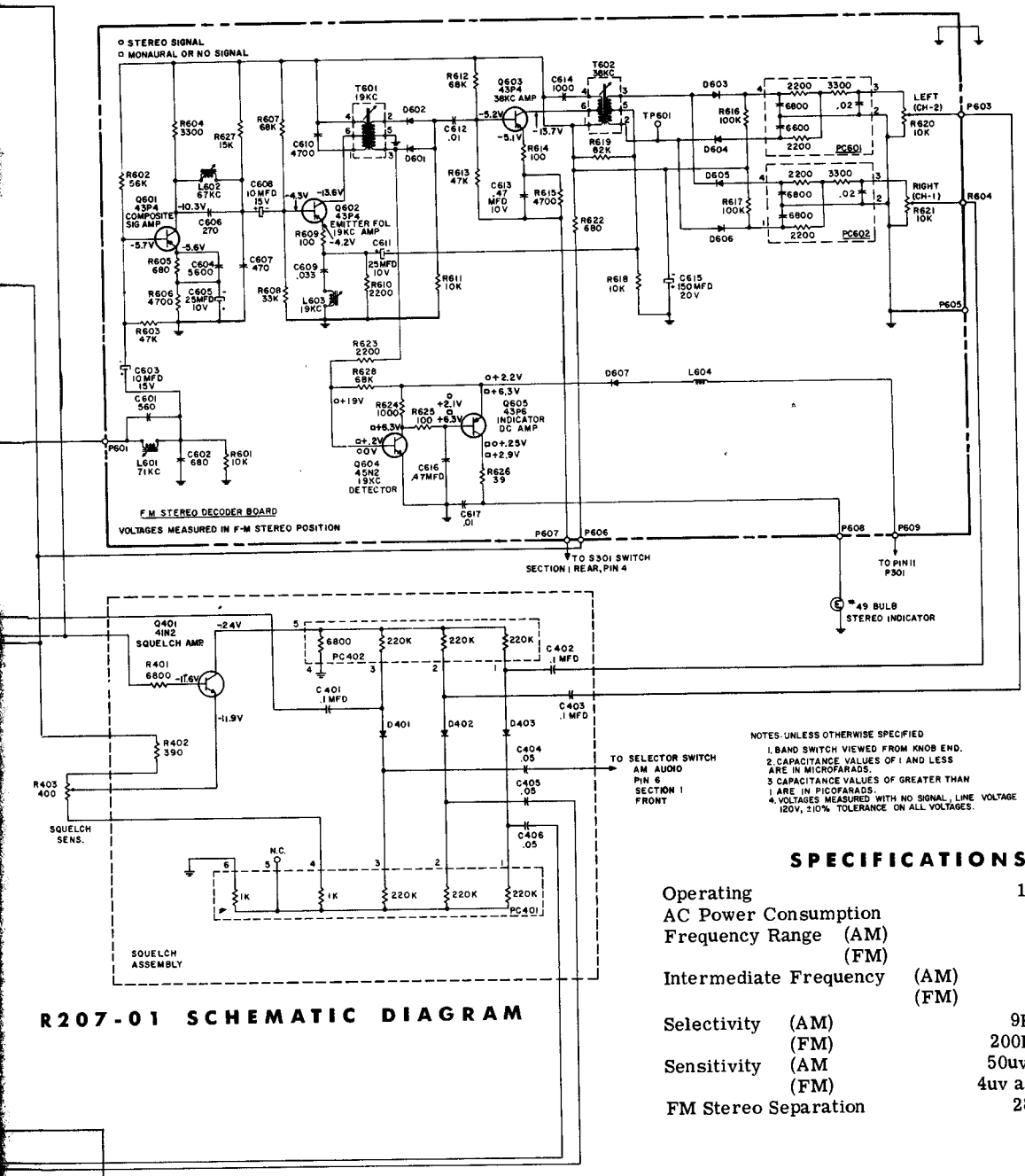

NOTES: UNLESS OTHERWISE SPECIFIED
1. BAND SWITCH VIEWED FROM KNOB END.
2. CAPACITANCE VALUES OF 1 AND LESS ARE IN MICROFARADS.
3. CAPACITANCE VALUES OF GREATER THAN 1 ARE IN PICOFARADS.
4. VOLTAGES MEASURED WITH NO SIGNAL, LINE VOLTAGE 120V, ±10% TOLERANCE ON ALL VOLTAGES.

R207-01 SCHEMATIC DIAGRAM

SPECIFICATIONS

Operating		120 VAC 60 cps
AC Power Consumption		40 watts
Frequency Range	(AM)	535-1605KC
	(FM)	88-108MC
Intermediate Frequency	(AM)	455KC
	(FM)	10.7MC
Selectivity	(AM)	9KC at 6db down
	(FM)	200KC at 6db down
Sensitivity	(AM	50uv/Meter on Rod
	(FM)	4uv at 30db Quieting
FM Stereo Separation		28db at 1000 cps

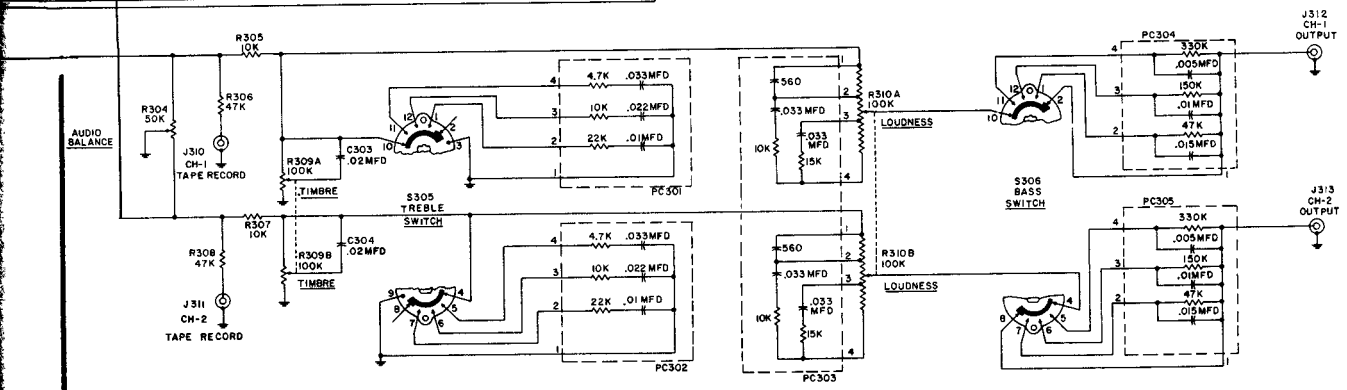

MAGNAVOX R207 AM/FM Radio Tuner

(Continued from preceding three pages)

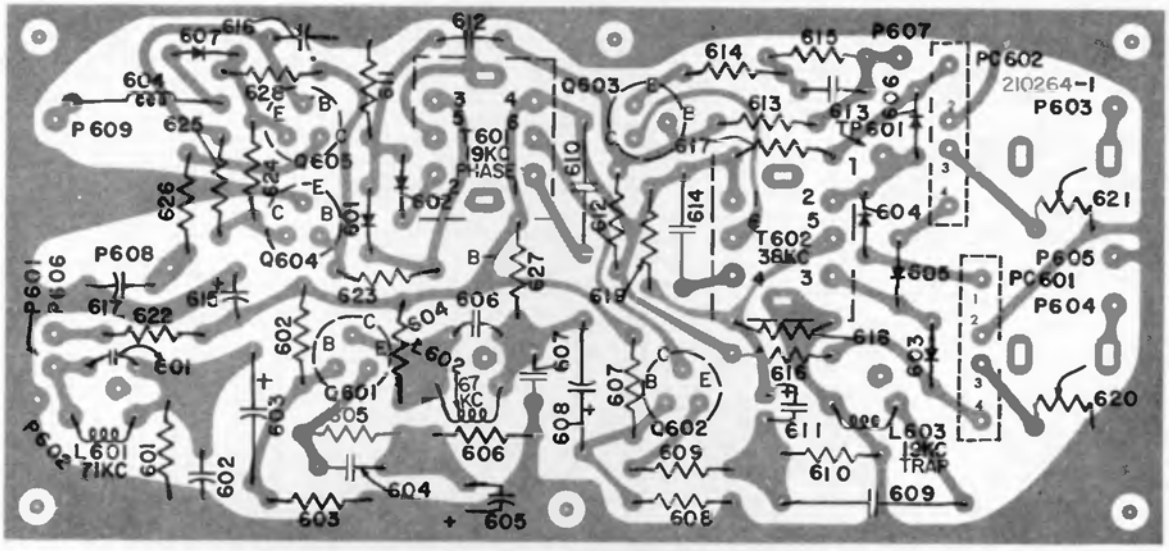

FM STEREO BOARD (BOTTOM VIEW)

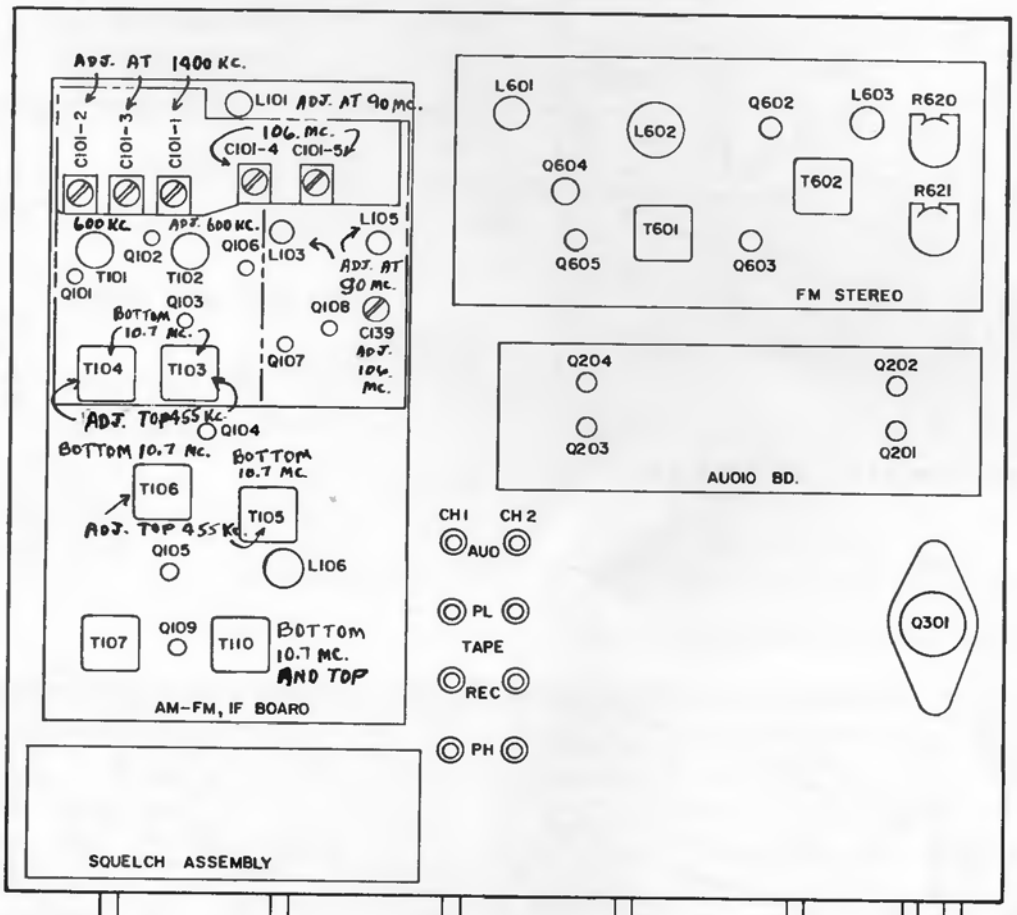

CHASSIS LAYOUT (TOP VIEW)

Magnavox

A551 SERIES AMPLIFIER

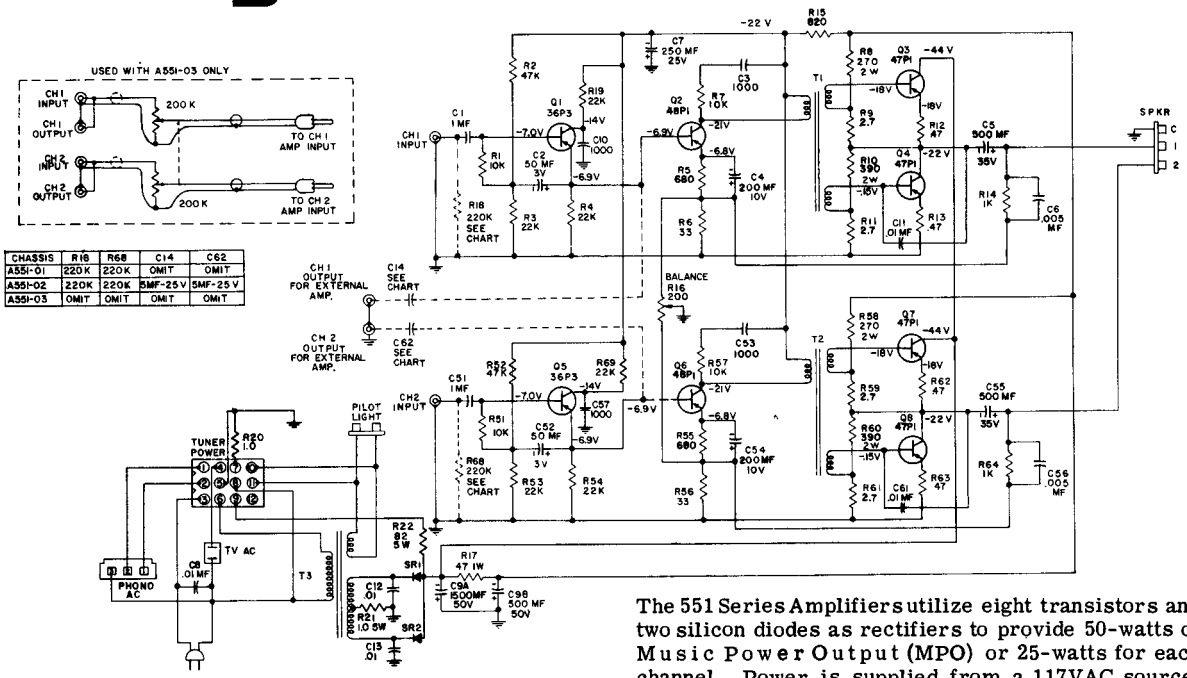

CHASSIS	R16	R68	C14	C62
A551-01	220K	220K	OMIT	OMIT
A551-02	220K	220K	5MF-25V	5MF-25V
A551-03	OMIT	OMIT	OMIT	OMIT

These amplifiers are the transformerless output type designed to use the speaker voice coil as the load. This type of circuit is quite common in transistor audio amplifiers. The voice coil impedance, therefore, plays an important part in the overall operation of the amplifier.

The 551 Series Amplifiers utilize eight transistors and two silicon diodes as rectifiers to provide 50-watts of Music Power Output (MPO) or 25-watts for each channel. Power is supplied from a 117VAC source. The power transformer is a step-down type designed to provide approximately 36 VDC @ 300MA after rectification by the two silicon diodes. These amplifiers are designed to work in conjunction with, and supply power for, a separate AM-FM transistor tuner.

A590 SERIES AMPLIFIER CHASSIS

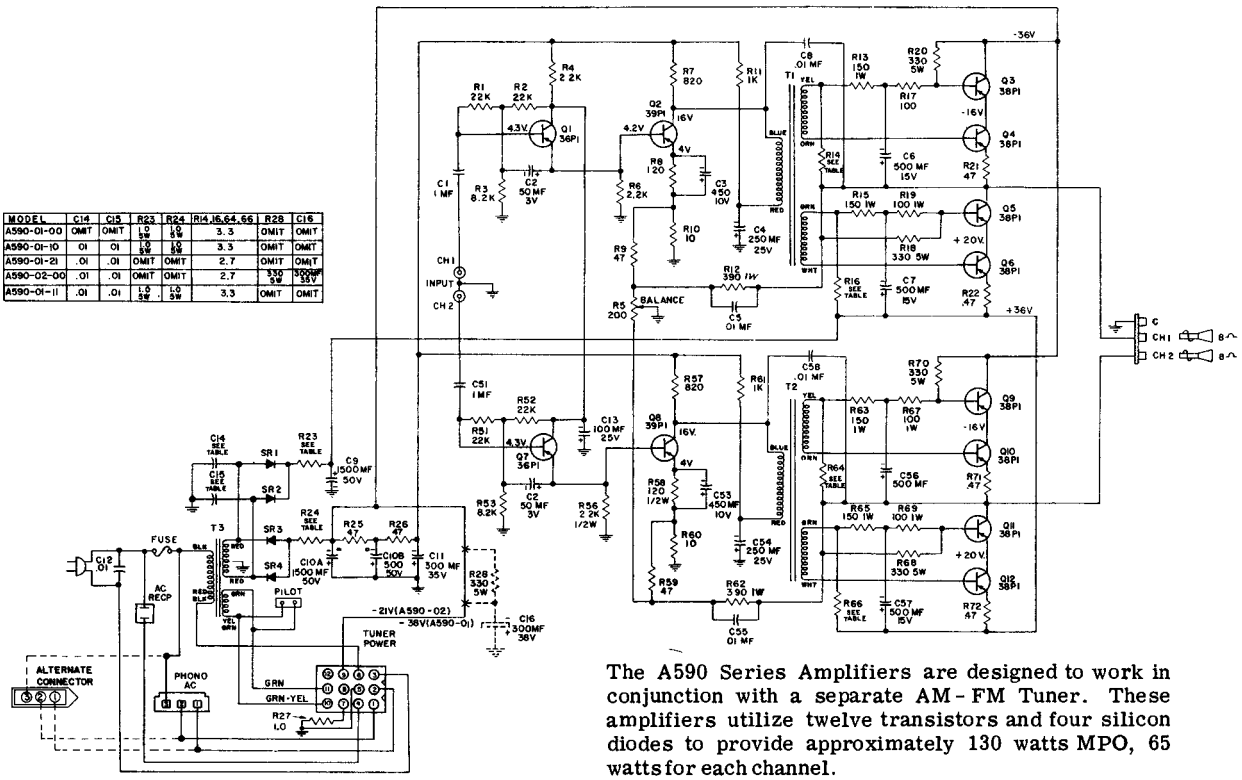

MODEL	C14	C15	R23	R24	R14,16,64,66	R28	C16
A590-01-00	OMIT	OMIT	1.0 5W	1.0 5W	3.3	OMIT	OMIT
A590-01-10	.01	.01	1.0 5W	1.0 5W	3.3	OMIT	OMIT
A590-01-21	.01	.01	OMIT	OMIT	2.7	OMIT	OMIT
A590-02-00	.01	.01	OMIT	OMIT	2.7	330 5W	300MF 36V
A590-01-11	.01	.01	1.0 5W	1.0 5W	3.3	OMIT	OMIT

The A590 Series Amplifiers are designed to work in conjunction with a separate AM-FM Tuner. These amplifiers utilize twelve transistors and four silicon diodes to provide approximately 130 watts MPO, 65 watts for each channel.

MONTGOMERY WARD
Models GEN-1250A
and GEN-1251A

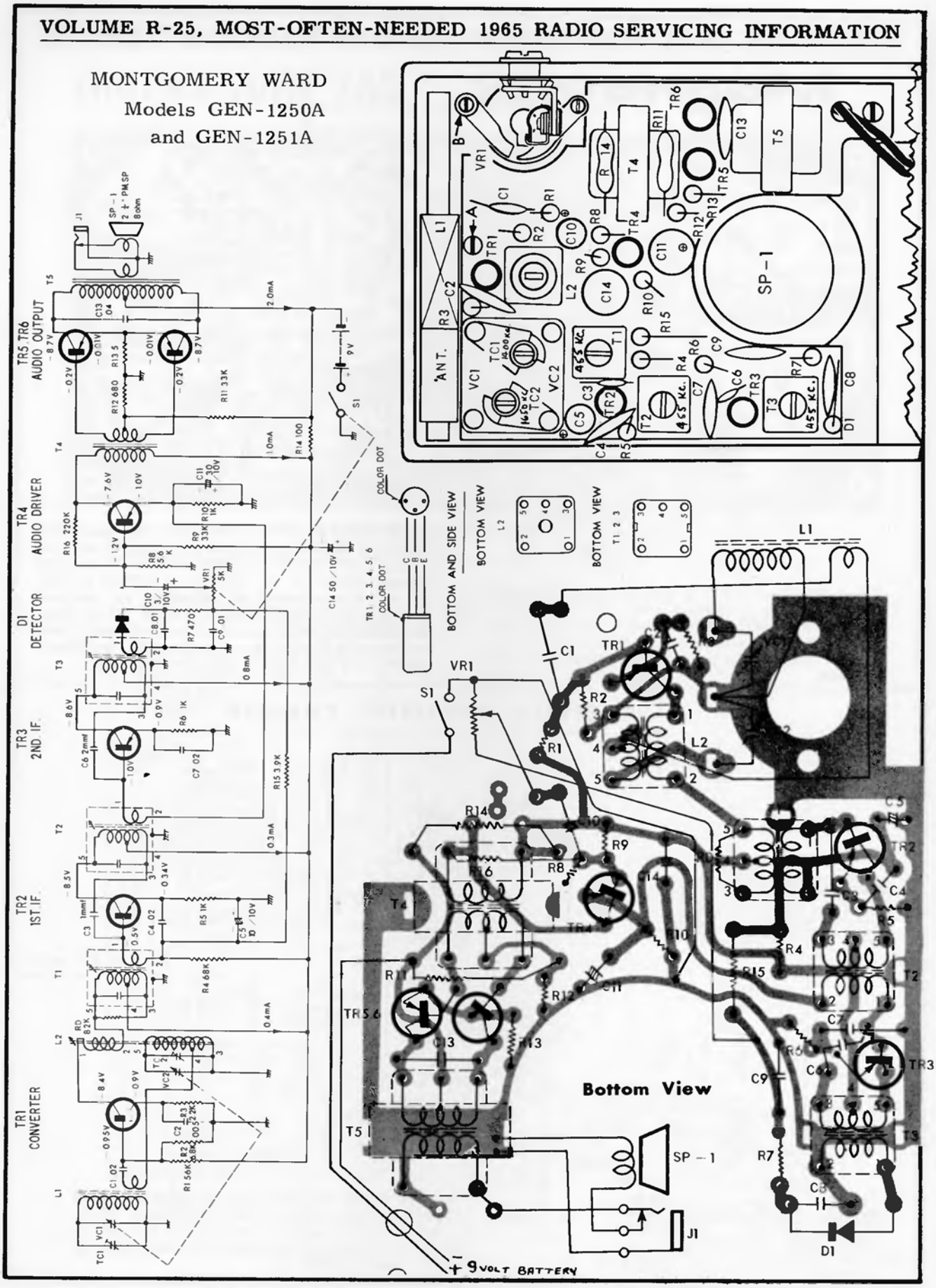

MONTGOMERY WARD

Model GEN-1257A

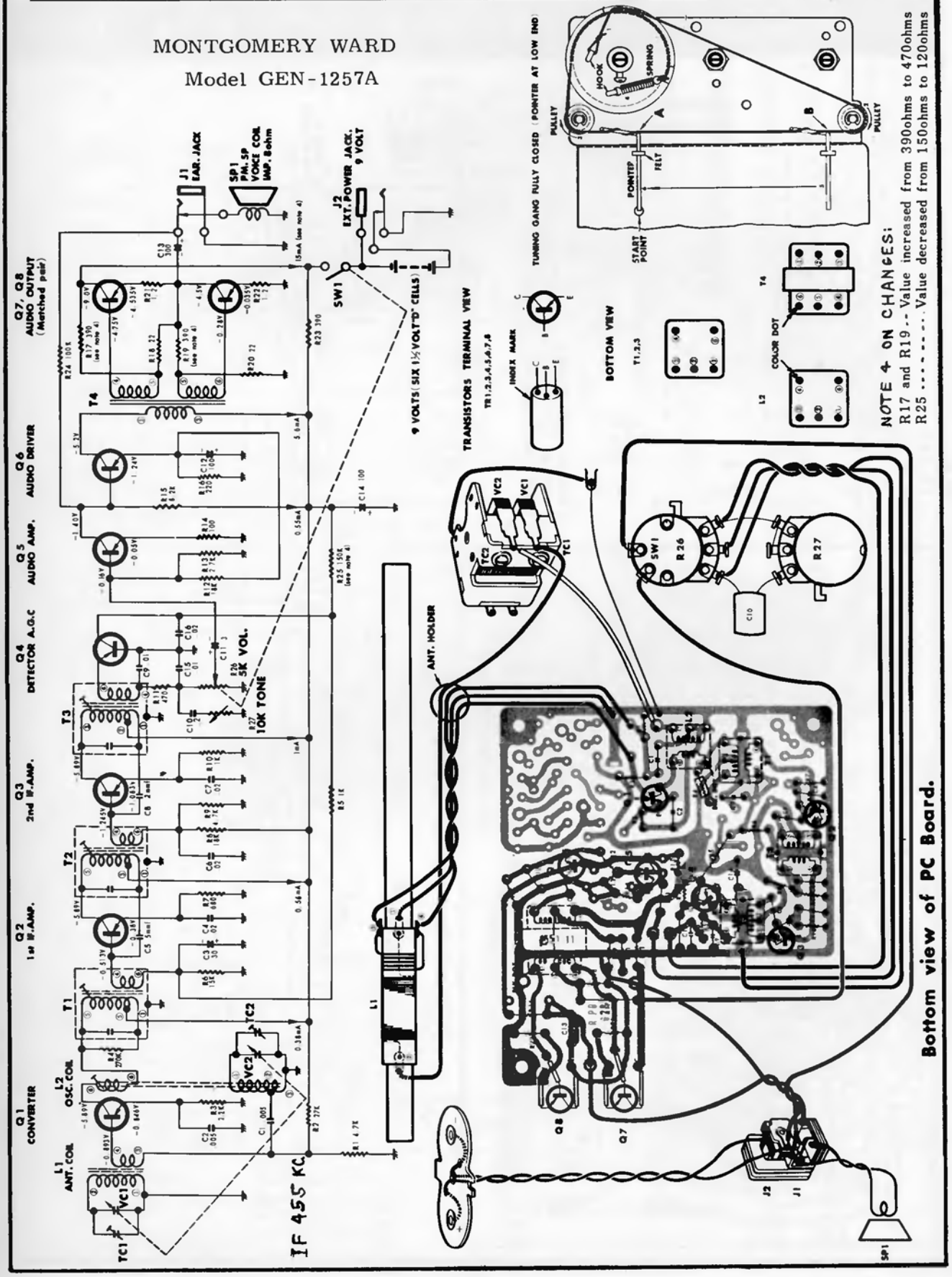

M O N T G O M E R Y W A R D

MODELS GEN-1802A, GEN-1803A, GEN-1804A, GEN-1805A, & GEN-1806A

NOTES:
1. ALL CAPACITANCE VALUES ARE IN MICROFARADS +80%-20% 50V MIN. UNLESS OTHERWISE INDICATED.
2. ALL RESISTANCE VALUES ARE IN OHMS, 1/2 W ±10% UNLESS OTHERWISE INDICATED.
3. VOLTAGES SHOWN AT EACH TRANSISTOR ELECTRODE (±20%) MEASURED TO COMMON GROUND WITH A VTVM WITH NO INPUT SIGNAL AND VOLUME CONTROL SET AT MAXIMUM, NEGATIVE GROUNDED.
4. ALL COIL AND TRANSFORMER RESISTANCES ARE MEASURED OUT OF CIRCUIT, RESISTANCES LESS THAN 1 OHM ARE NOT SHOWN.

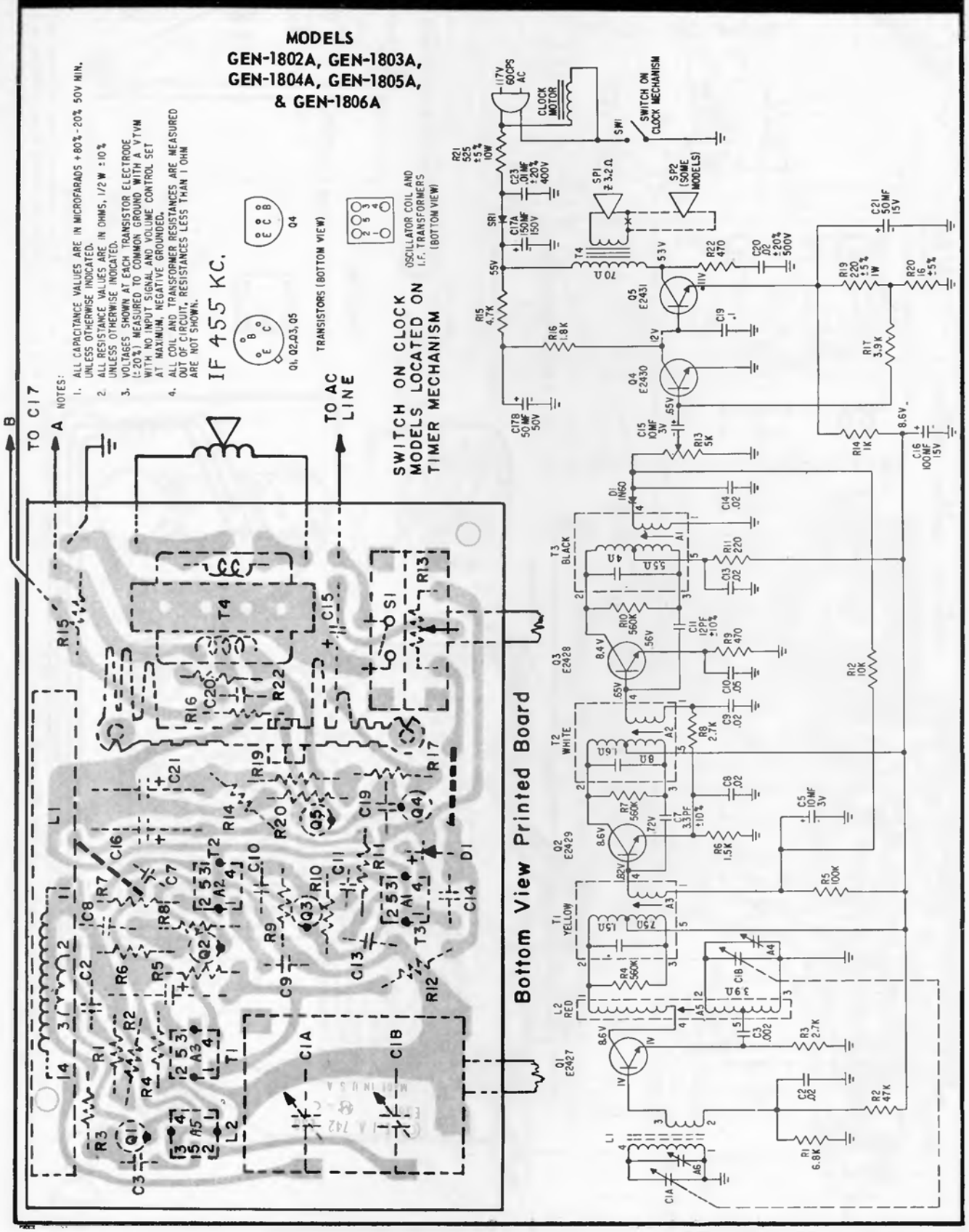

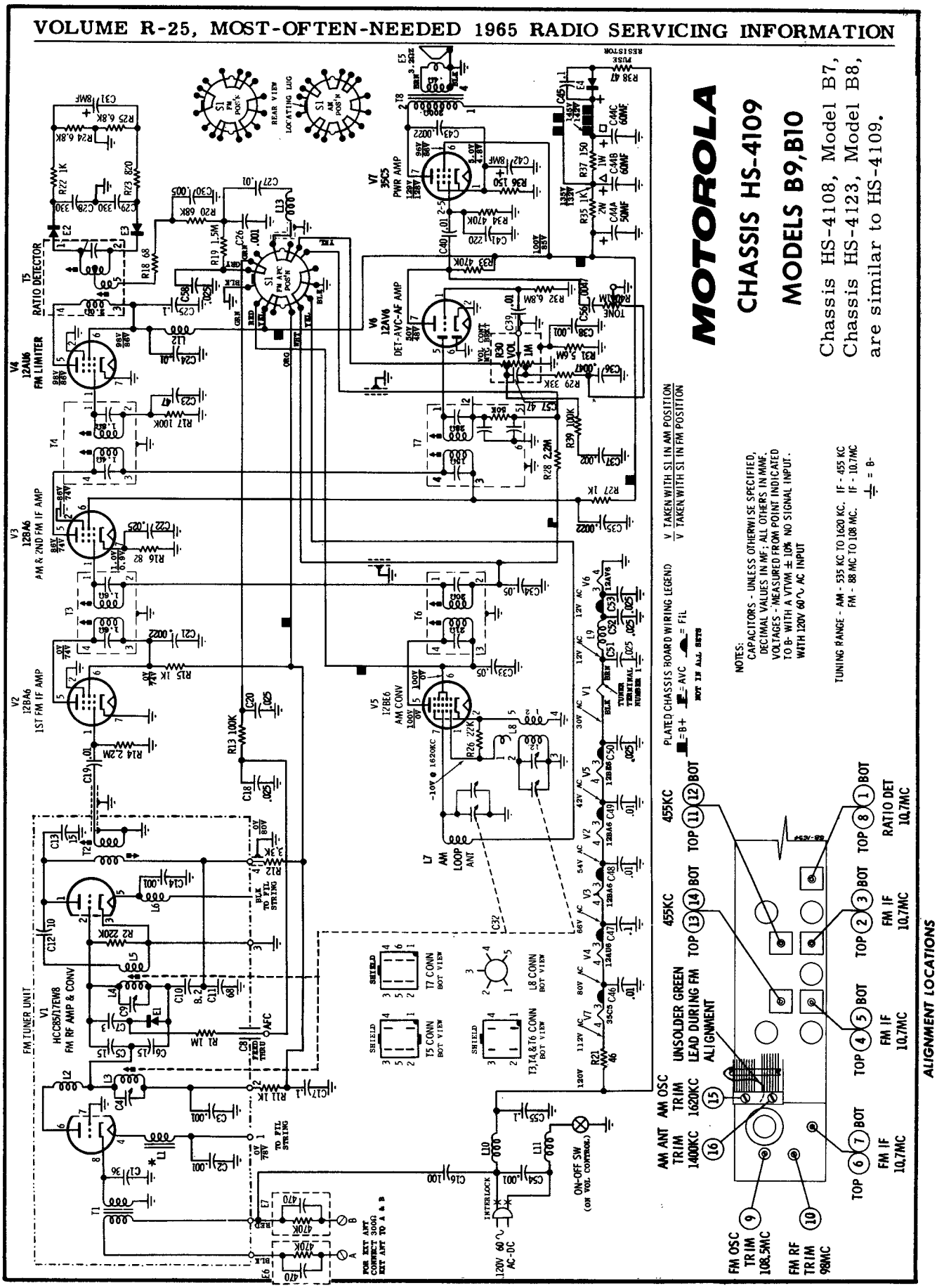
MOTOROLA
CHASSIS HS-4109
MODELS B9,B10
Chassis HS-4108, Model B7, Chassis HS-4123, Model B8, are similar to HS-4109.
NOTES:
CAPACITORS - UNLESS OTHERWISE SPECIFIED, DECIMAL VALUES IN MF; ALL OTHERS IN MMF.
VOLTAGES - MEASURED FROM POINT INDICATED TO B- WITH A VTVM ± 10% NO SIGNAL INPUT. WITH 120V 60~ AC INPUT
TUNING RANGE - AM - 535 KC TO 1620 KC. FM - 88 MC TO 108 MC.
IF - 455 KC
IF - 10.7MC
= B-
PLATED CHASSIS BOARD WIRING LEGEND
= B+
= AVC
= FIL
V TAKEN WITH S1 IN AM POSITION
V TAKEN WITH S1 IN FM POSITION
V4 12AU6 FM LIMITER
V3 12BA6 AM & 2ND FM IF AMP
V2 12BA6 1ST FM IF AMP
V1 HCC85/17EW8 FM RF AMP & CONV
FM TUNER UNIT
T5 RATIO DETECTOR
V7 35C5 PWR AMP
V6 12AV6 DET-AVC-AF AMP
V5 12BE6 AM CONV
L7 AM LOOP ANT
T7 CONN BOT VIEW
T5 CONN BOT VIEW
L8 CONN BOT VIEW
T3,T4,&T6 CONN BOT VIEW
REAR VIEW
LOCATING LUG
ON-OFF SW (ON VOL CONTROL)
INTERLOCK
120V 60~ AC-DC
FOR EXT ANT CONNECT 300Ω EXT ANT TO A & B
455KC
UNSOLDER GREEN LEAD DURING FM ALIGNMENT
AM ANT TRIM 1400KC
AM OSC TRIM 1620KC
FM OSC TRIM 108.5MC
FM RF TRIM 98MC
FM IF 10.7MC
RATIO DET 10.7MC
ALIGNMENT LOCATIONS

MOTOROLA

CHASSIS HS-4135,4134 MODELS BC4, B11, B12

(Diagram on page 67, plated chassis views on page 68)

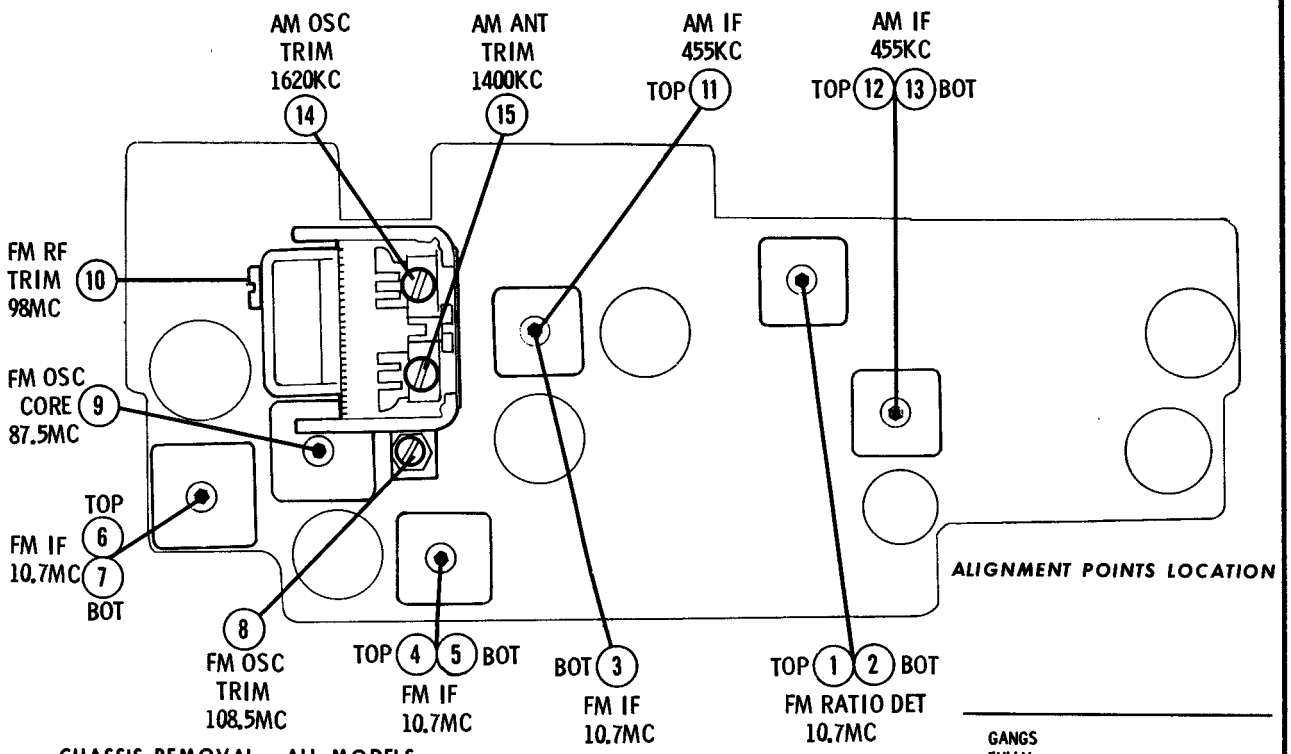

ALIGNMENT POINTS LOCATION

CHASSIS REMOVAL - ALL MODELS

1. Remove tuning knob only; do not attempt to remove captivated volume knob and pointer dial.

2. Remove 4 cabinet back mounting screws, separate back from front of cabinet, then disconnect FM antenna connecting lead from inside back; if necessary, unsolder leads connected to cabinet back.

3. Remove screw from left side of AM antenna insulator and screw from AM gang mounting bracket.

4. On Model B12 only, also remove 2 chassis bracket mounting screws located at right and left sides inside cabinet; then remove 3 screws from bottom of cabinet.

5. Slide chassis out from rear of cabinet; when re-installing chassis into cabinet, make sure the slots at the rear of the volume knob and pointer dial line up properly with their respective shafts on the chassis.

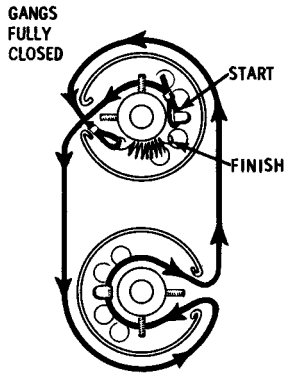

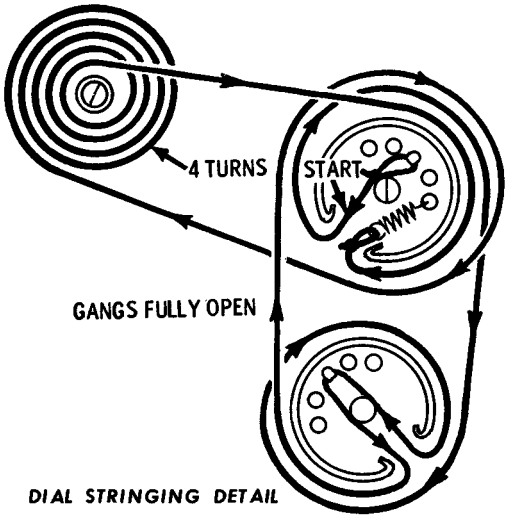

DIAL STRINGING DETAIL

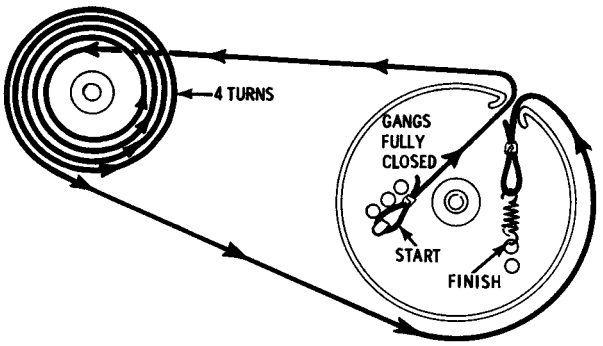

ALTERNATE STRINGING USED IN SOME SETS

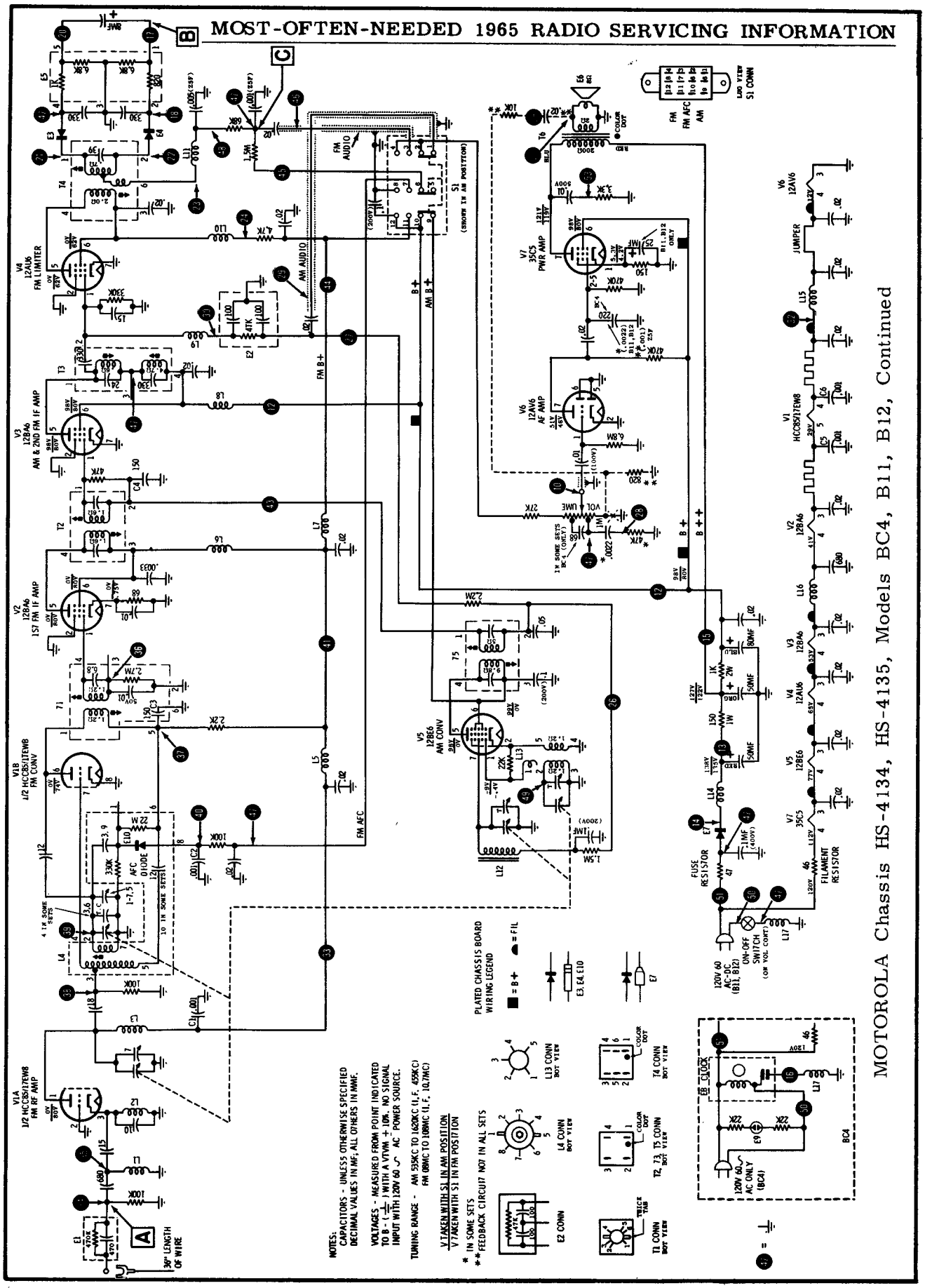
V1A 1/2 HC8S/17EW8 FM RF AMP
V1B 1/2 HC8S/17EW8 FM CONV
V2 12BA6 1ST FM IF AMP
V3 12BA6 AM & 2ND FM IF AMP
V4 12AU6 FM LIMITER
V5 12BE6 AM CONV
V6 12AV6 AF AMP
V7 35C5 PWR AMP
V1 HC8S/17EW8
V2 12BA6
V3 12BA6
V4 12AU6
V5 12BE6
V6 12AV6
V7 35C5
FM AUDIO
AM AUDIO
FM B+
AM B+
B+
B++
FM AFC
FM AFC AM
S1 CONN
S1 (SHOWN IN AM POSITION)
JUMPER
FUSE RESISTOR
FILAMENT RESISTOR
ON-OFF SWITCH (ON VOL CONT)
120V 60 AC-DC (B11, B12)
120V 60 AC ONLY (BC4)
PLATED CHASSIS BOARD WIRING LEGEND
= B+
= FIL
E3, E4, E10
E7
L13 CONN BOT VIEW
L4 CONN BOT VIEW
E2 CONN
T4 CONN BOT VIEW
T2, T3, T5 CONN BOT VIEW
T1 CONN BOT VIEW
BC4
NOTES:
CAPACITORS - UNLESS OTHERWISE SPECIFIED DECIMAL VALUES IN MF; ALL OTHERS IN MMF.
VOLTAGES - MEASURED FROM POINT INDICATED TO B - (⏚) WITH A VTVM ± 10%. NO SIGNAL INPUT WITH 120V 60 ∽ AC POWER SOURCE.
TUNING RANGE - AM 535KC TO 1620KC (I.F. 455KC) FM 88MC TO 108MC (I.F. 10.7MC)
V TAKEN WITH S1 IN AM POSITION
V TAKEN WITH S1 IN FM POSITION
* IN SOME SETS
** FEEDBACK CIRCUIT NOT IN ALL SETS
36" LENGTH OF WIRE
MOTOROLA Chassis HS-4134, HS-4135, Models BC4, B11, B12, Continued

MOTOROLA Chassis HS-4134, HS-4135, Models BC4, B11, B12, Continued

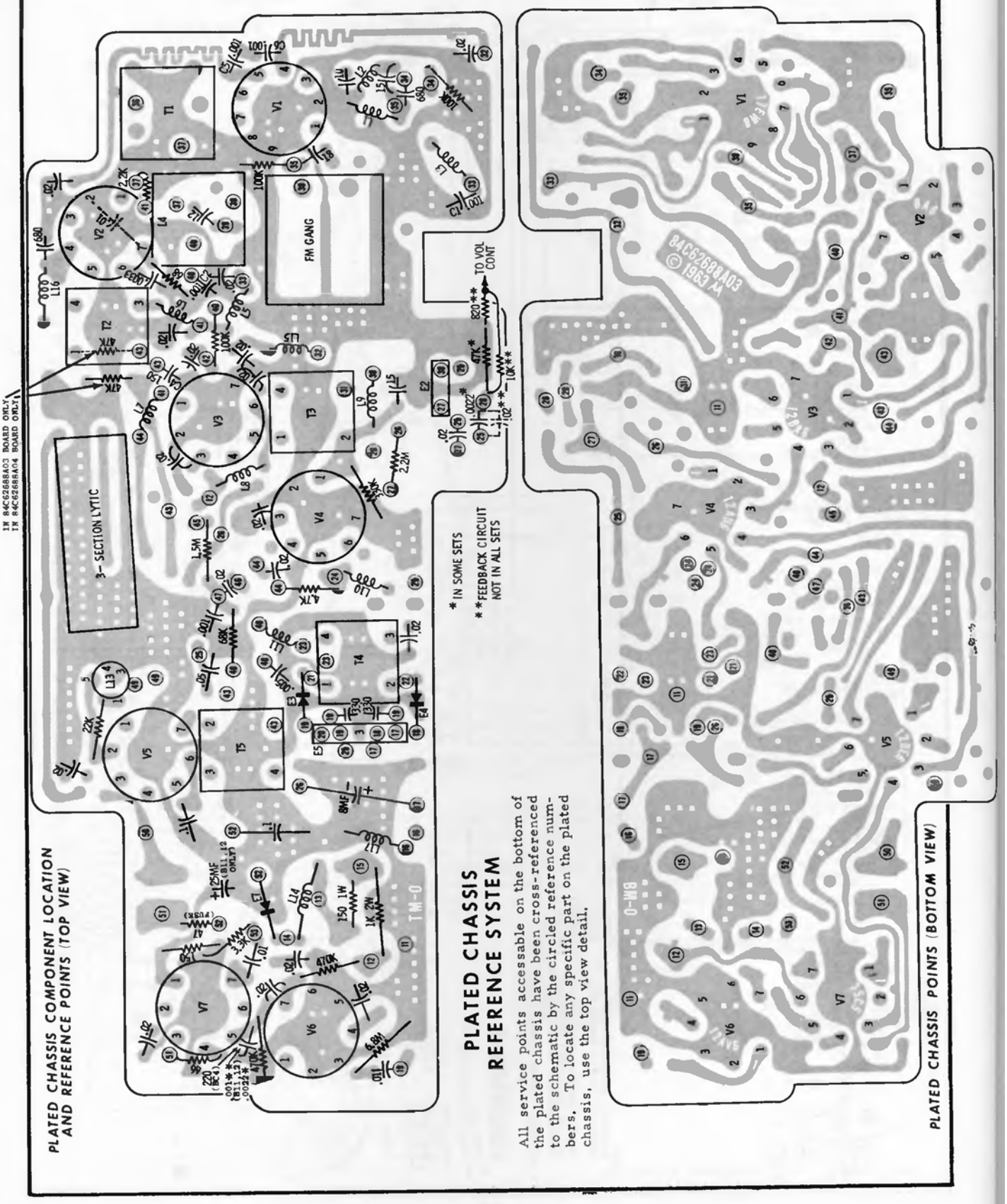

MOTOROLA CHASSIS HS-4137 MODEL A25

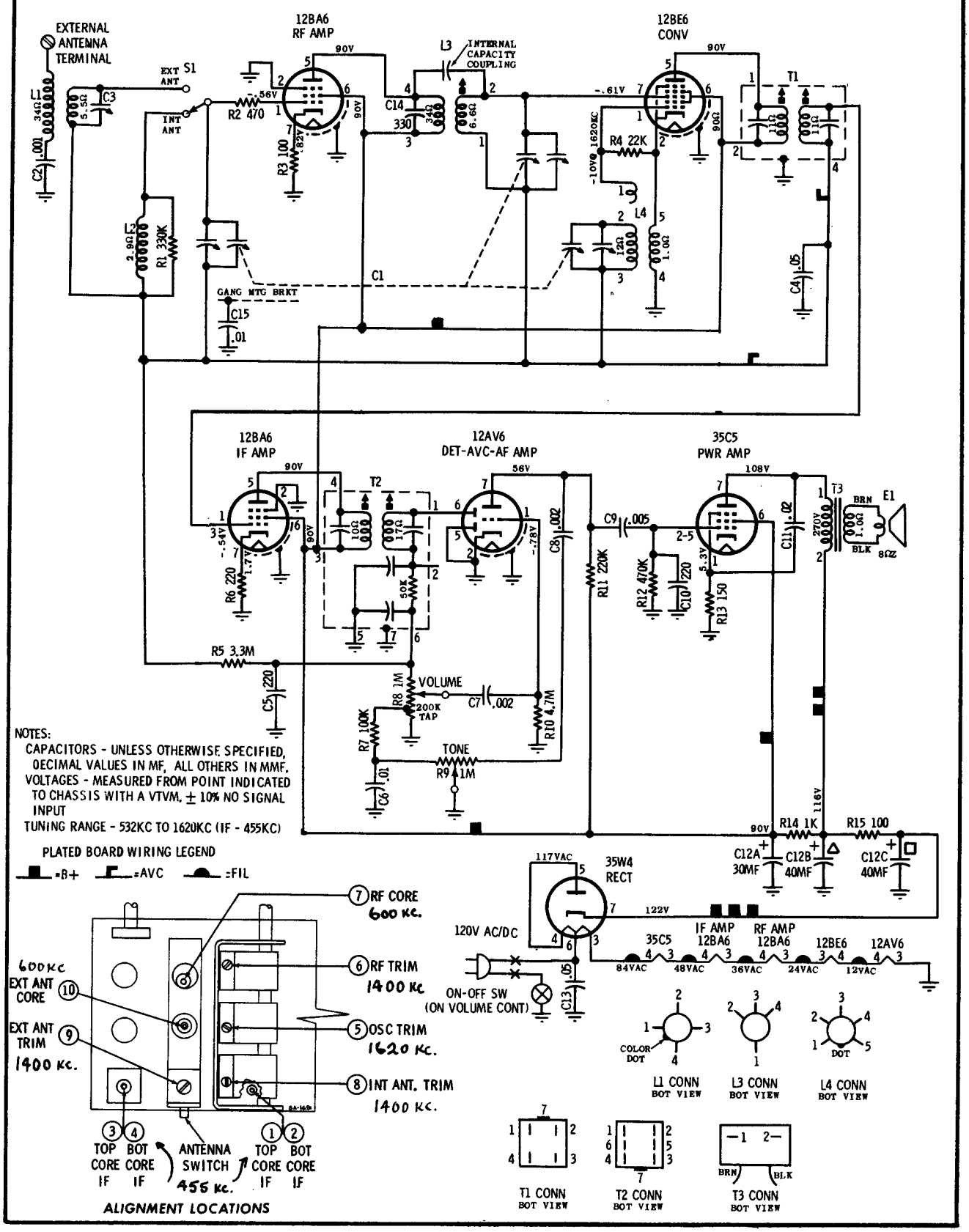

MOTOROLA MODELS A26,A27,C38,C39

(Continued on page 71)

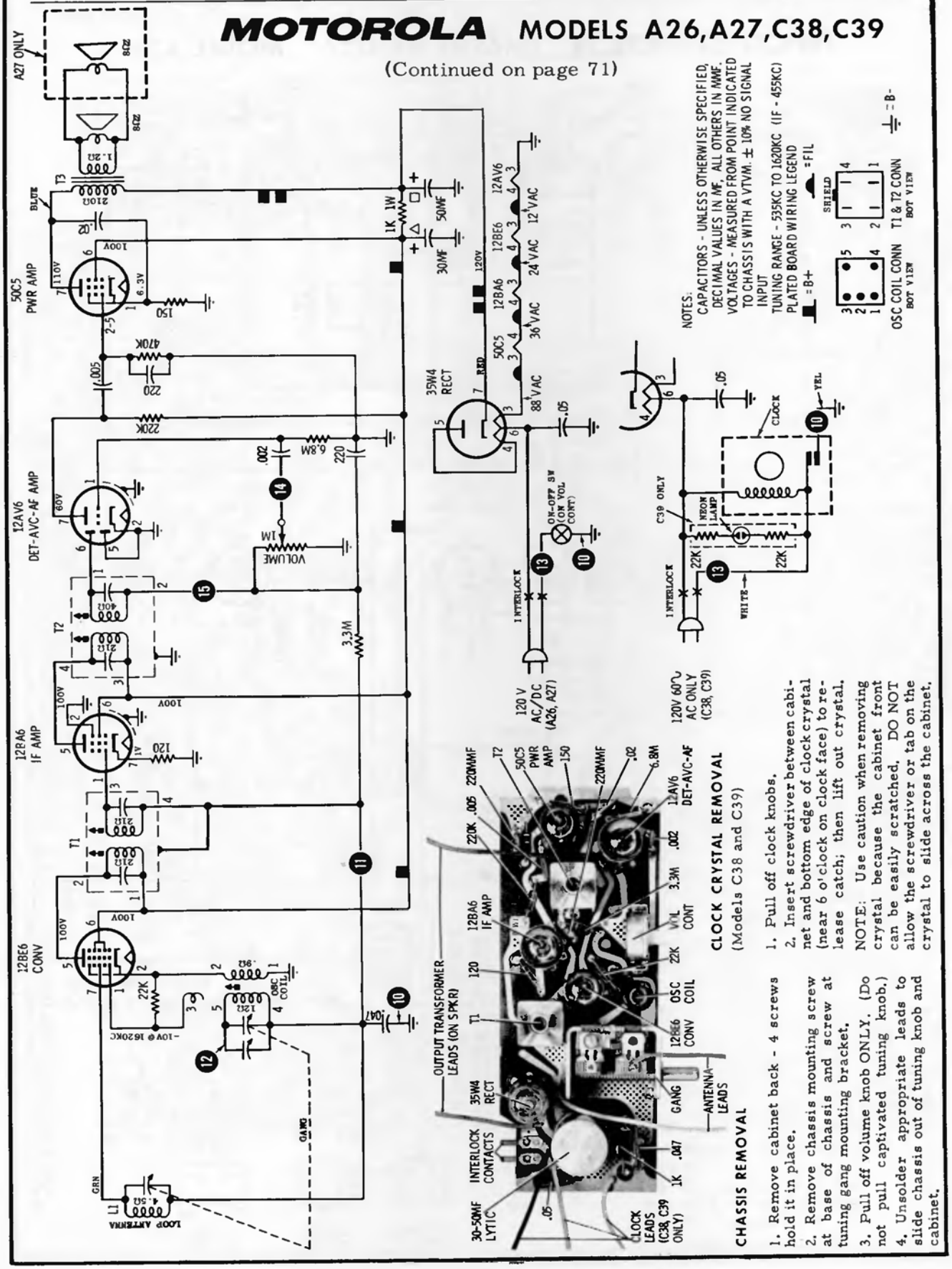

CHASSIS REMOVAL

1. Remove cabinet back - 4 screws hold it in place.
2. Remove chassis mounting screw at base of chassis and screw at tuning gang mounting bracket.
3. Pull off volume knob ONLY. (Do not pull captivated tuning knob.)
4. Unsolder appropriate leads to slide chassis out of tuning knob and cabinet.

CLOCK CRYSTAL REMOVAL

(Models C38 and C39)

1. Pull off clock knobs.
2. Insert screwdriver between cabinet and bottom edge of clock crystal (near 6 o'clock on clock face) to release catch; then lift out crystal.

NOTE: Use caution when removing crystal because the cabinet front can be easily scratched. DO NOT allow the screwdriver or tab on the crystal to slide across the cabinet.

MOTOROLA Models A26, A27, C38, C39, Continued

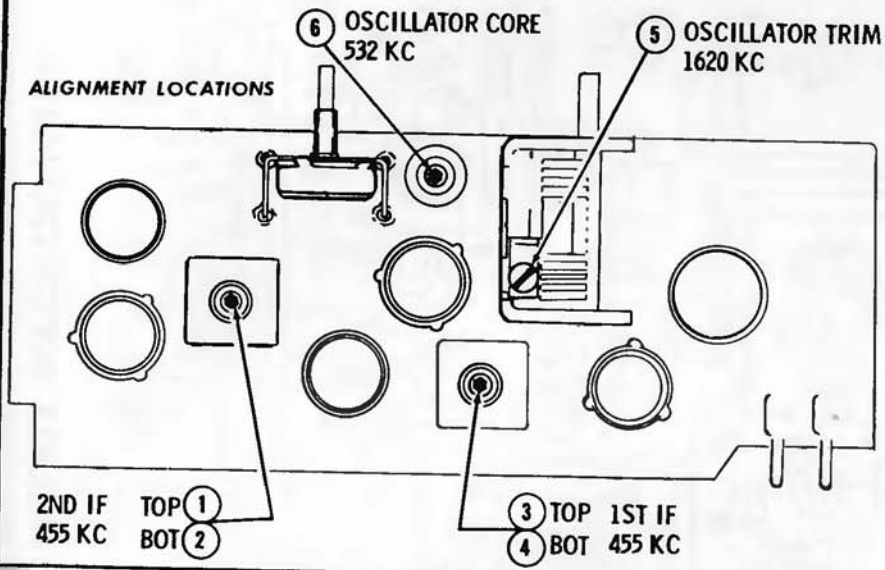

MODEL A27

PLATED CHASSIS REFERENCE SYSTEM

All service points accessable on the bottom of the plated chassis have been cross-referenced to the schematic by the circled reference numbers. To locate any specific part on the plated chassis, use the plated chassis parts location photo.

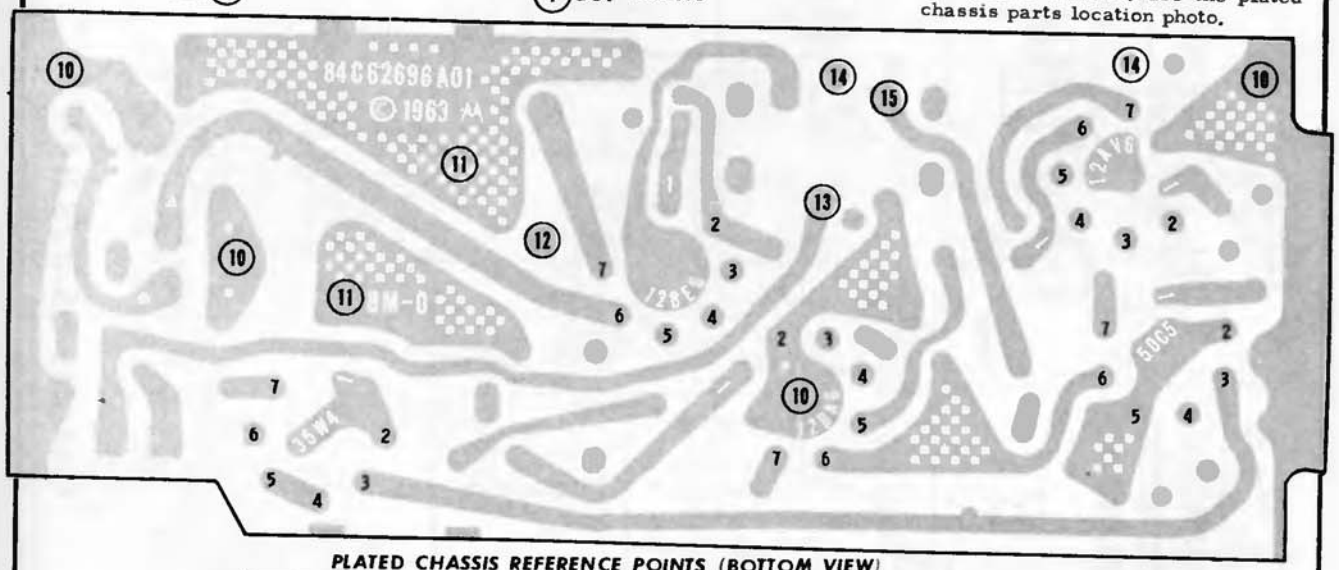

PLATED CHASSIS REFERENCE POINTS (BOTTOM VIEW)

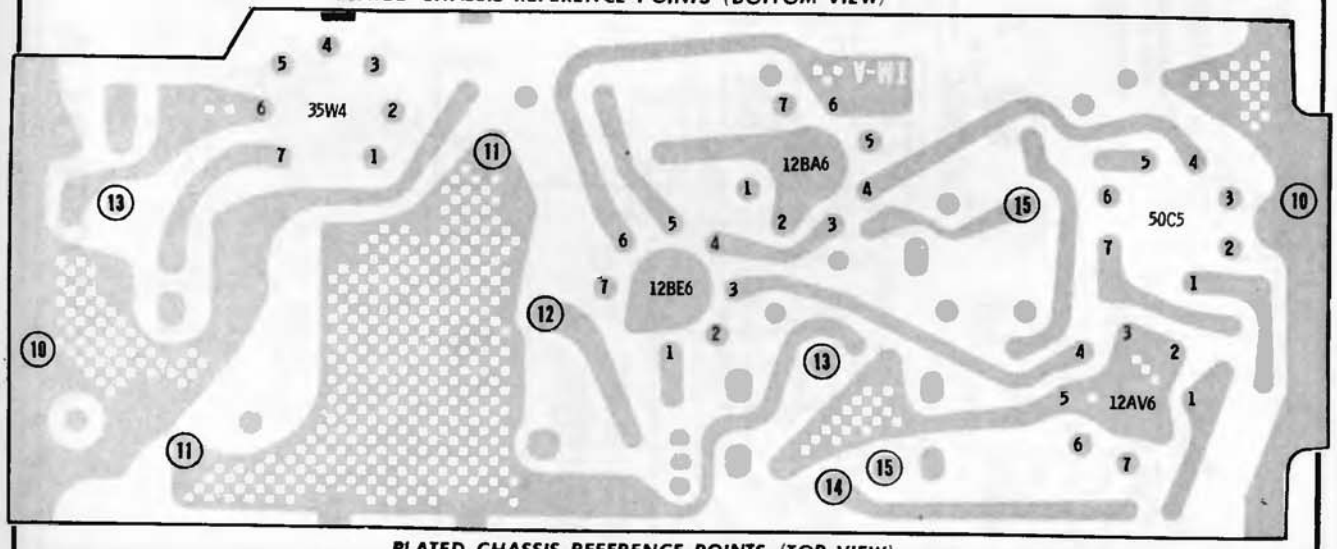

PLATED CHASSIS REFERENCE POINTS (TOP VIEW)

MOTOROLA Chassis HS-1128, HS-1147

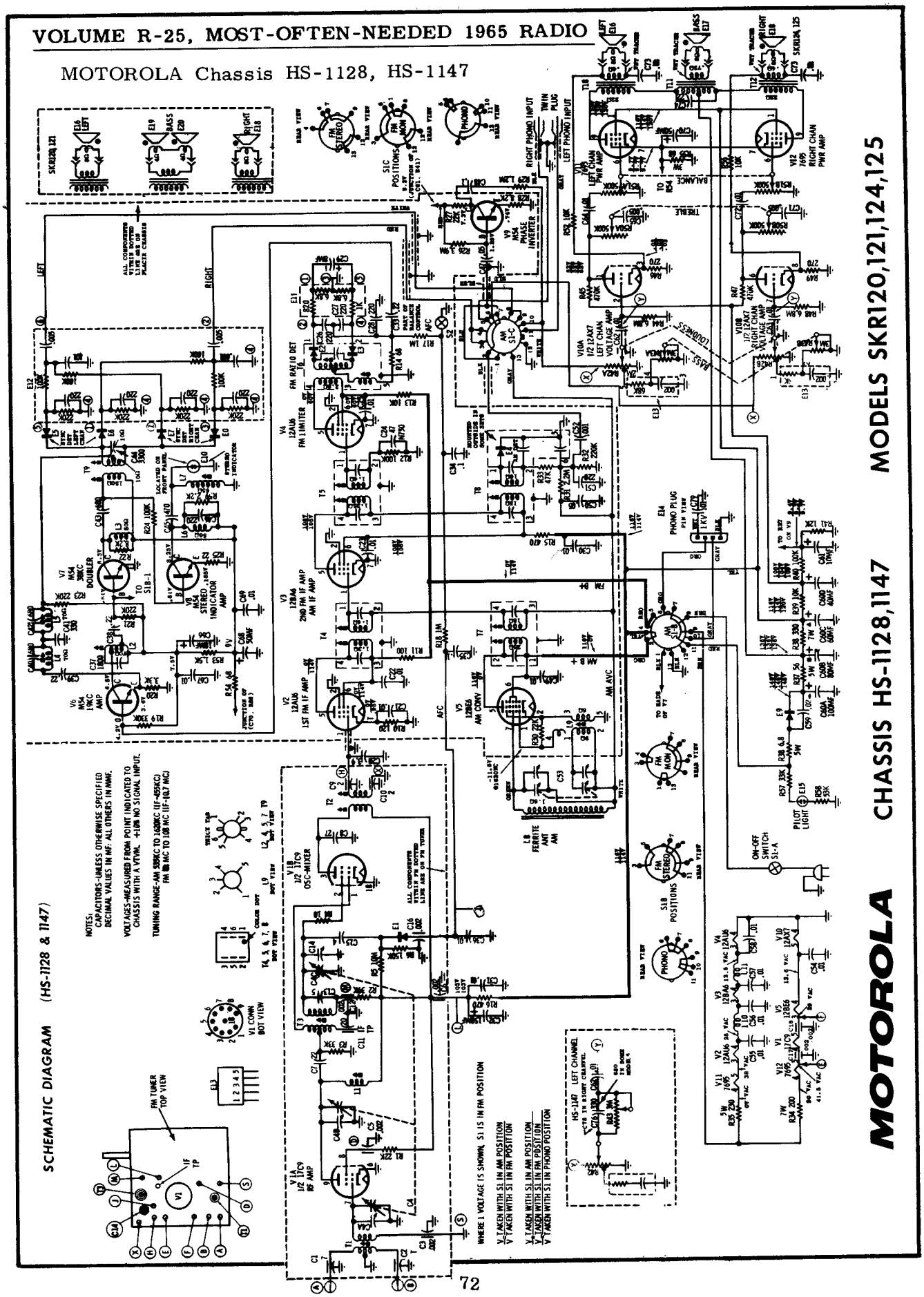

MOTOROLA CHASSIS HS-1130,1181,1253, MODELS SP53,SP54

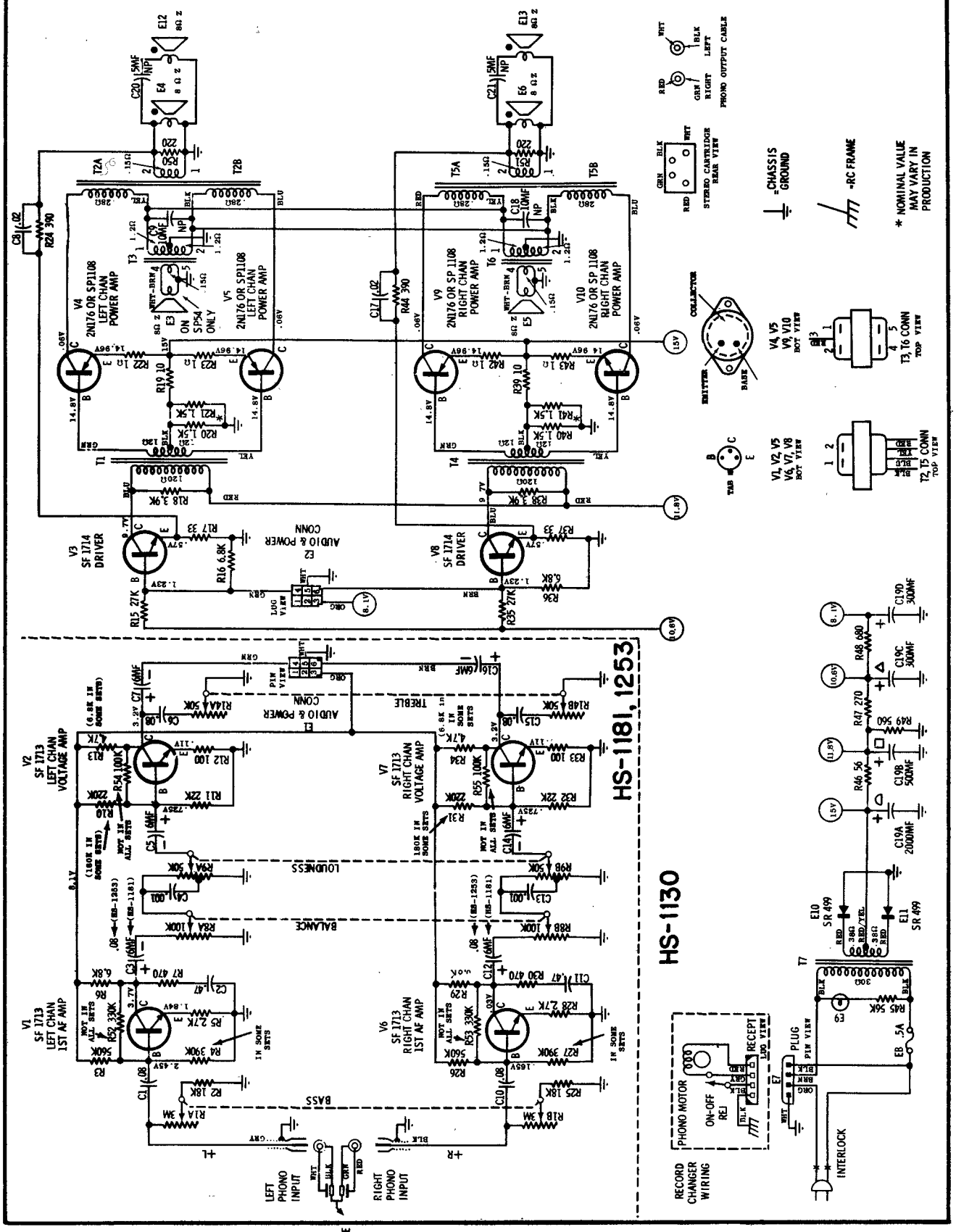

MOTOROLA CHASSIS HS-1137,1138,1222

MODELS SK136,161,162,SKR135,136,161,162, SK-166, SKR-166, SKR-167

(Material on pages 74 through 76)

Three-Channel Stereophonic Consoles; SK versions use the HS-1137 pre-amp, SKR versions use the HS-1138 tuner pre-amp; all versions use the HS-1222 power amp.

OPERATING AMPLIFIER WITH LOAD - Always operate the amplifier chassis with an output load (either the speakers or an 8 ohm, 10 watt resistive load) across each channel.

SPEAKER PHASING - Refer to the schematic diagram.

ELECTRICAL SPECIFICATIONS

Power Supply: 120 volts, 60 cycle AC only

Power Consumption: 190 watts (includes radio power).

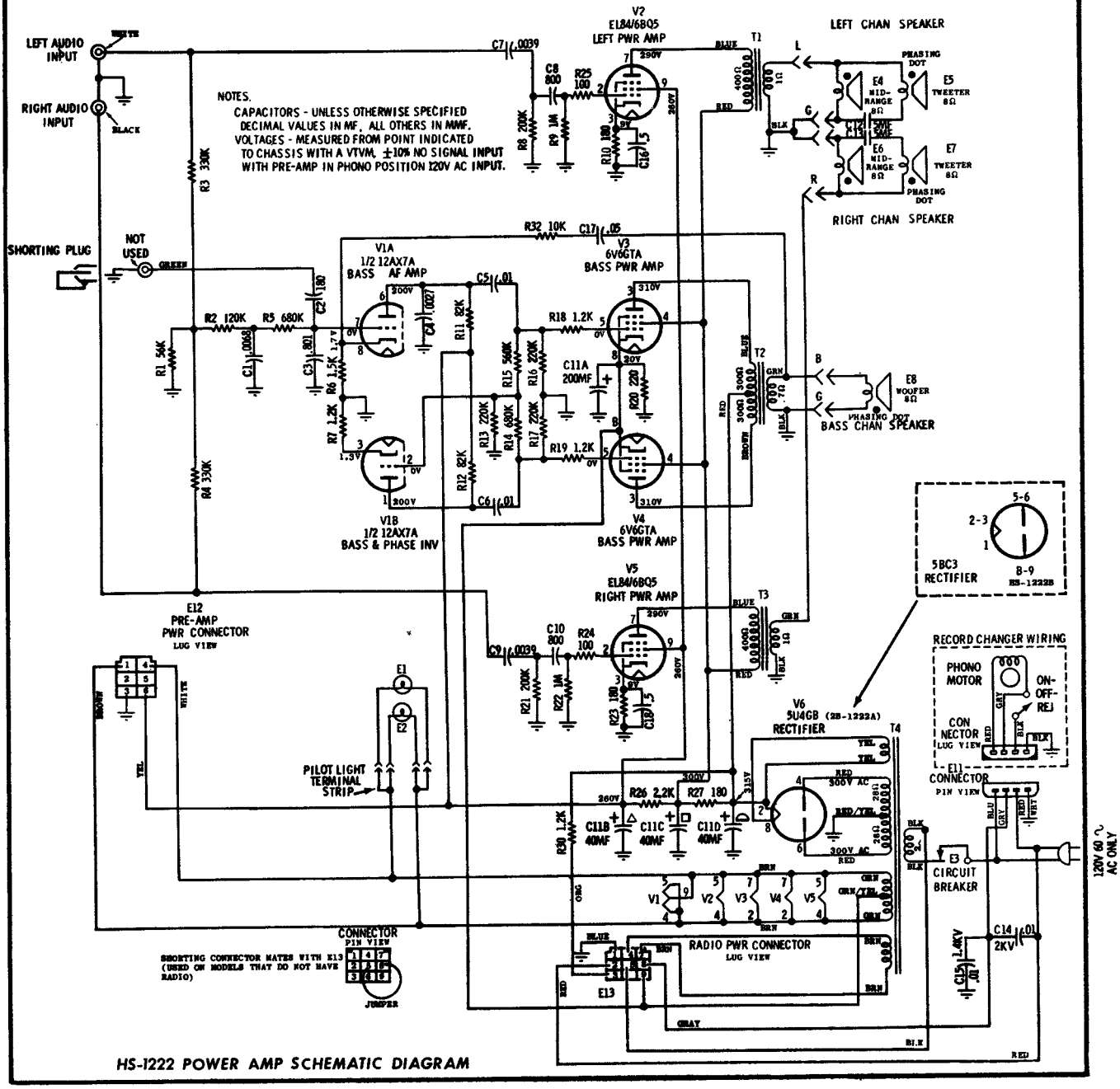

HS-1222 POWER AMP SCHEMATIC DIAGRAM

MOTOROLA Chassis HS-1137, HS-1138 (see pages 74, 76, for related data)

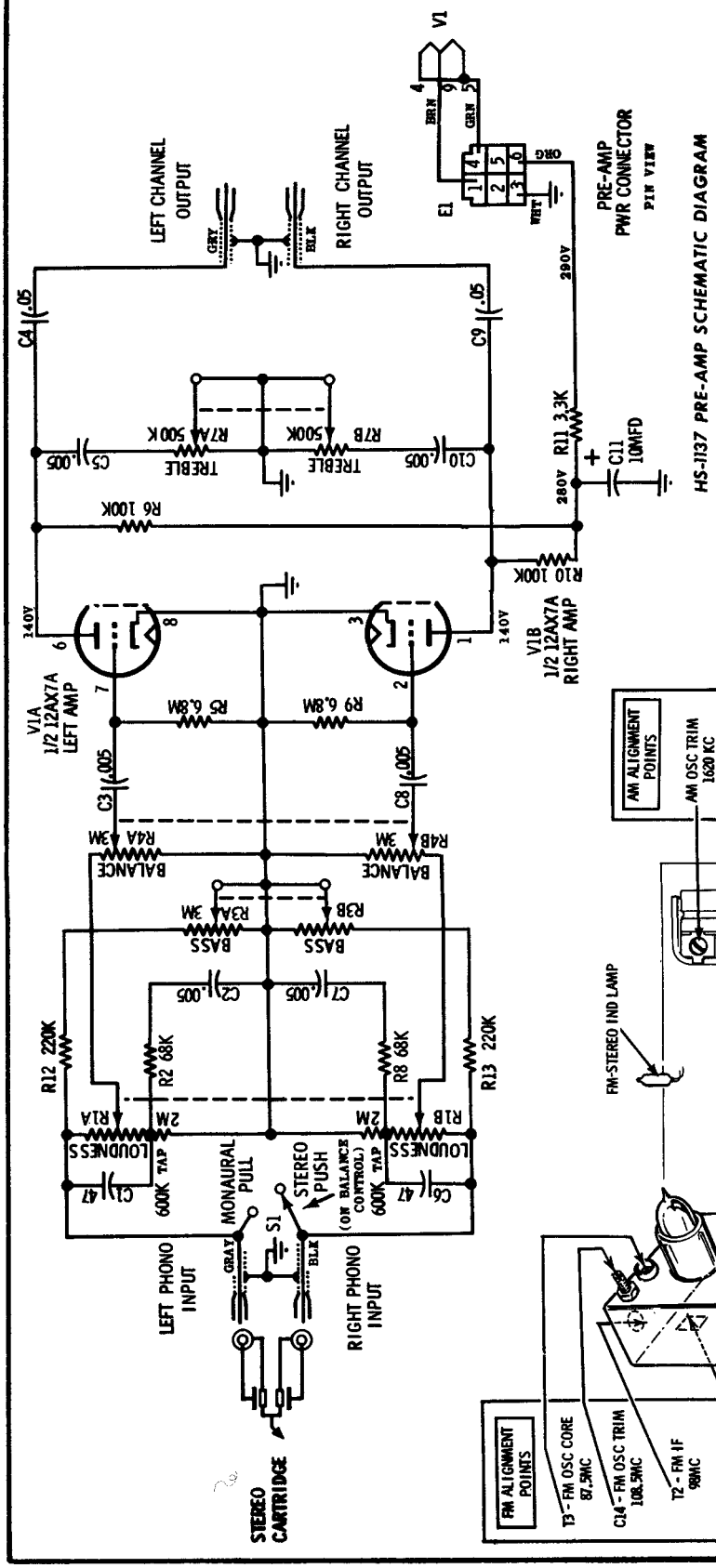

CHASSIS REMOVAL

Pre-Amp (HS-1137)

1. Remove control knobs.
2. Remove back cover by removing screws.
3. Remove record storage compartment by removing its bezel and then compressing top edges.
4. Remove 4 hex nuts and 1 machine screw located next to loudness control.
5. Pull pre-amp down and disconnect any leads if necessary.

TUNER CHASSIS (HS-1138)

1. Remove back cover by removing screws and pulling cover back to disengage inter-lock plug.
2. Remove record storage compartment by removing screw in bracket at bottom of storage compartment. Compress top edges of compartment to remove it.
3. Disconnect cables, remove the chassis mounting screws and lift chassis out. Power amp chassis can be removed by removing screws holding chassis to cabinet bottom and lifting chassis out. Be sure all cables are disconnected before removing chassis.

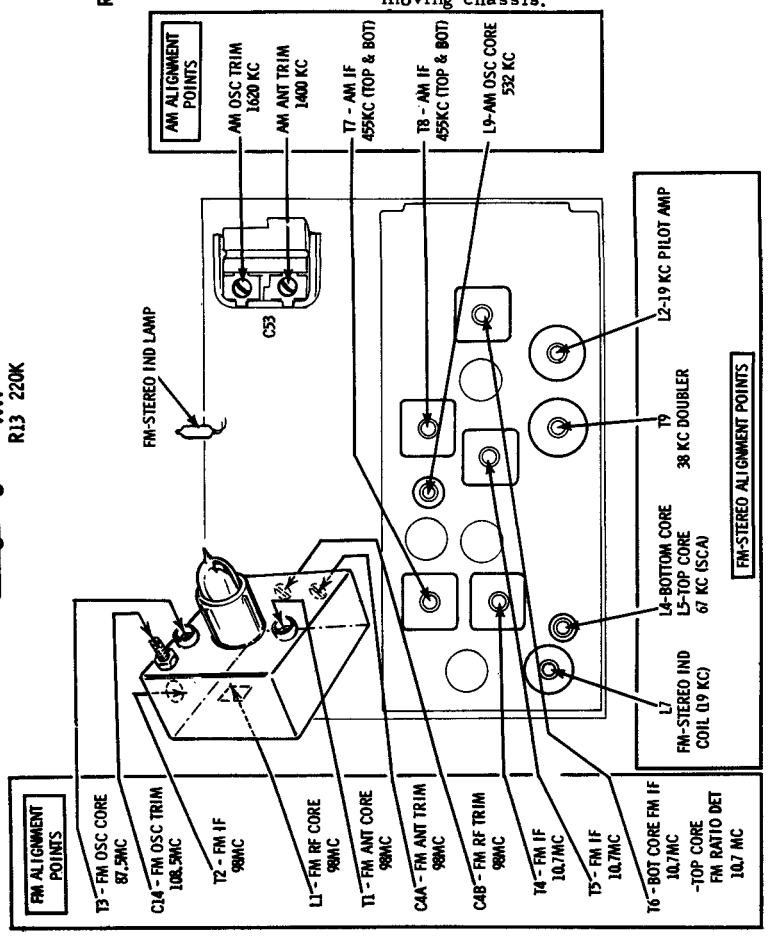

ALIGNMENT POINTS LOCATION

MOTOROLA Chassis HS-1138 Diagram

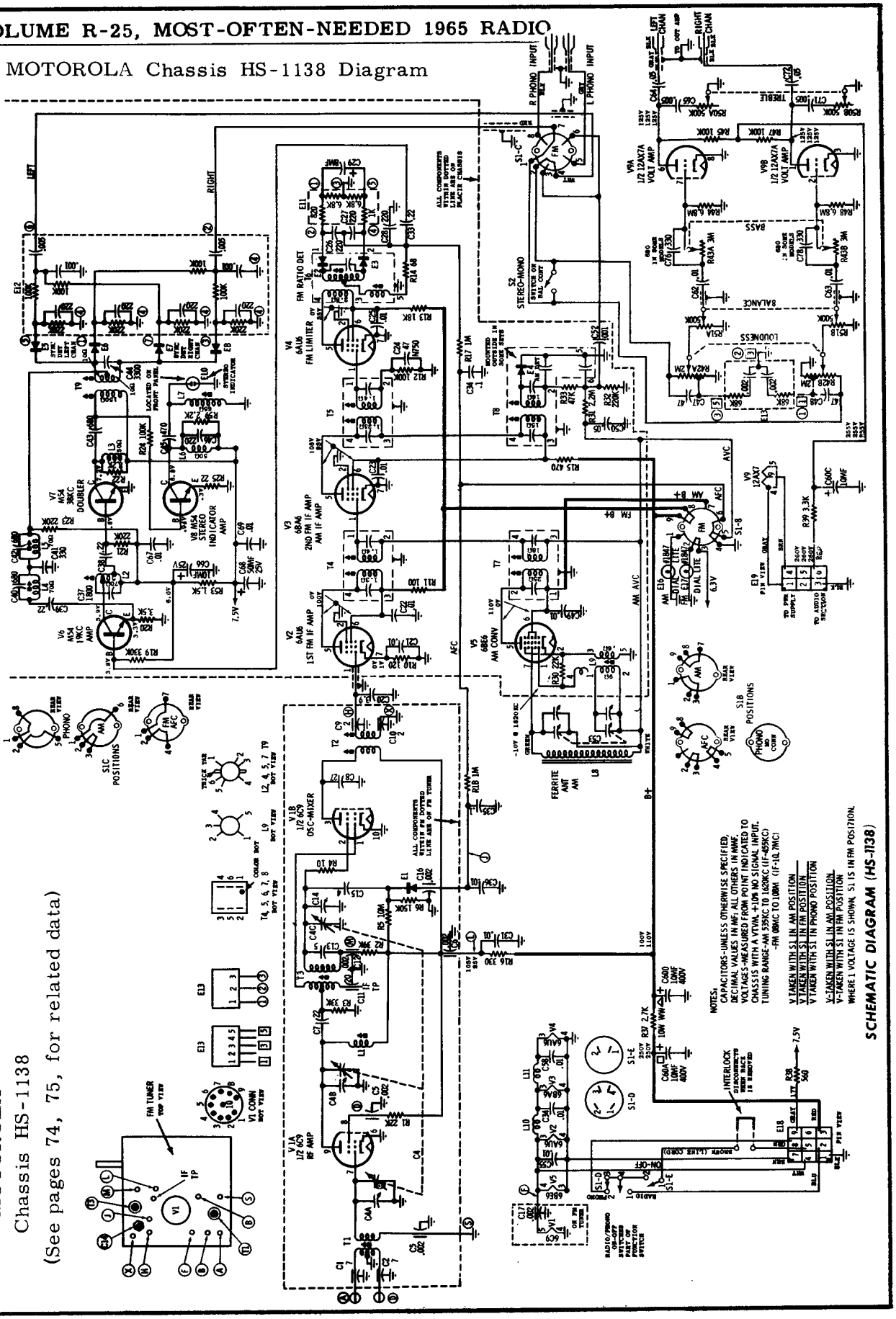

MOTOROLA
Chassis HS-1138
(See pages 74, 75, for related data)

MOTOROLA

MODELS SK145,163,SKR145,163
CHASSIS HS-1185,1186,1239

CHASSIS REMOVAL

1. Remove back cover by removing screws and pulling cover back to disengage inter-lock plug.

2. Remove record storage compartment by removing screw in bracket at bottom of storage compartment. Compress top edges of compartment to remove it.

3. Disconnect cables, remove chassis mounting screws and lift chassis out. Power amp chassis can be removed by removing screws holding chassis to cabinet bottom and lifting chassis out.

These models are three-channel Stereophonic consoles. SK versions use HS-1186 pre-amp chassis which is very similar to HS-1137 (on page 75); SKR versions use HS-1185 tuner which is very similar to HS-1138 (page 76); all versions use HS-1239 power amplifier, schematic diagram below.

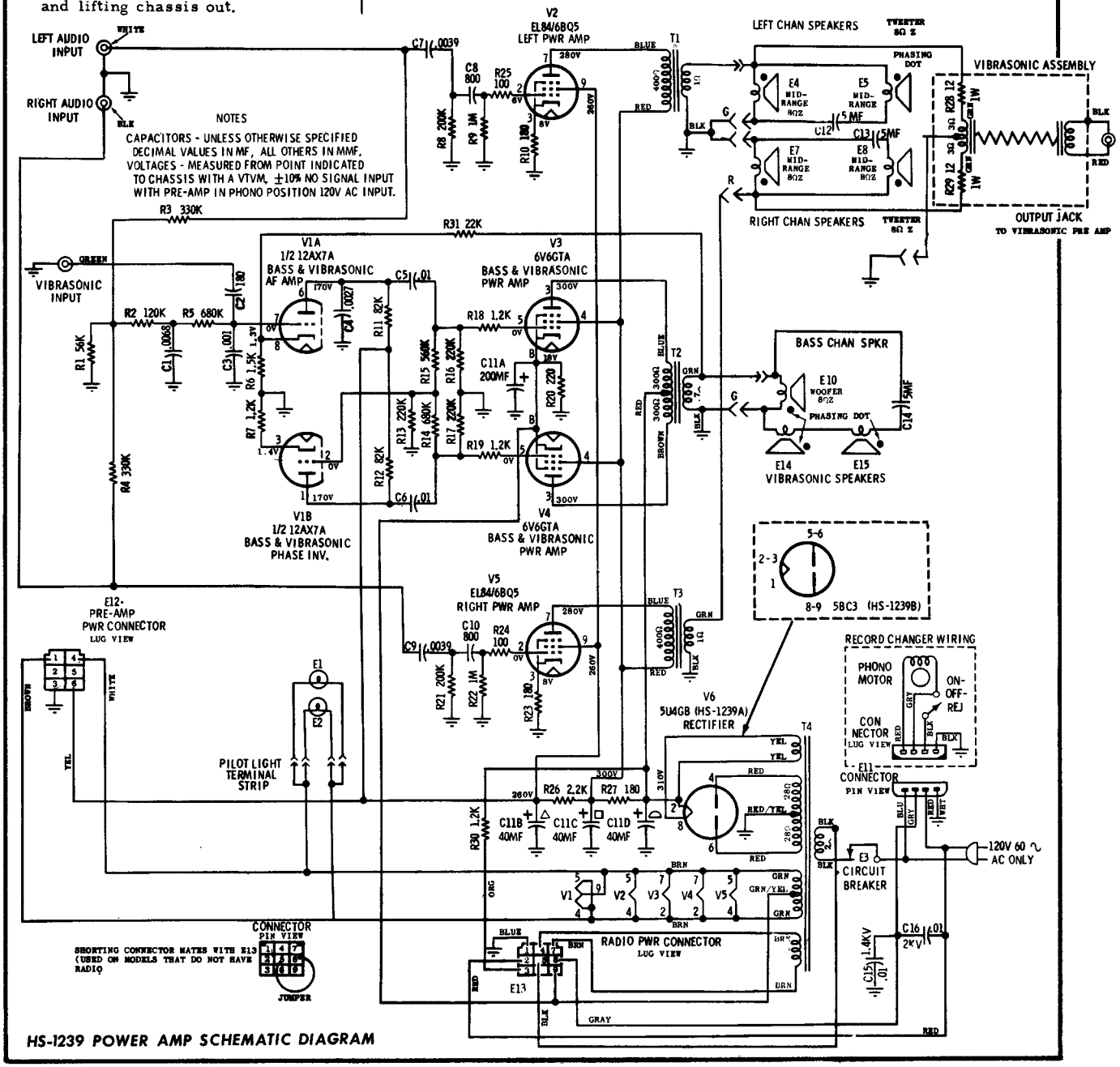

HS-1239 POWER AMP SCHEMATIC DIAGRAM

MOTOROLA

MODEL SK135
CHASSIS HS-1150

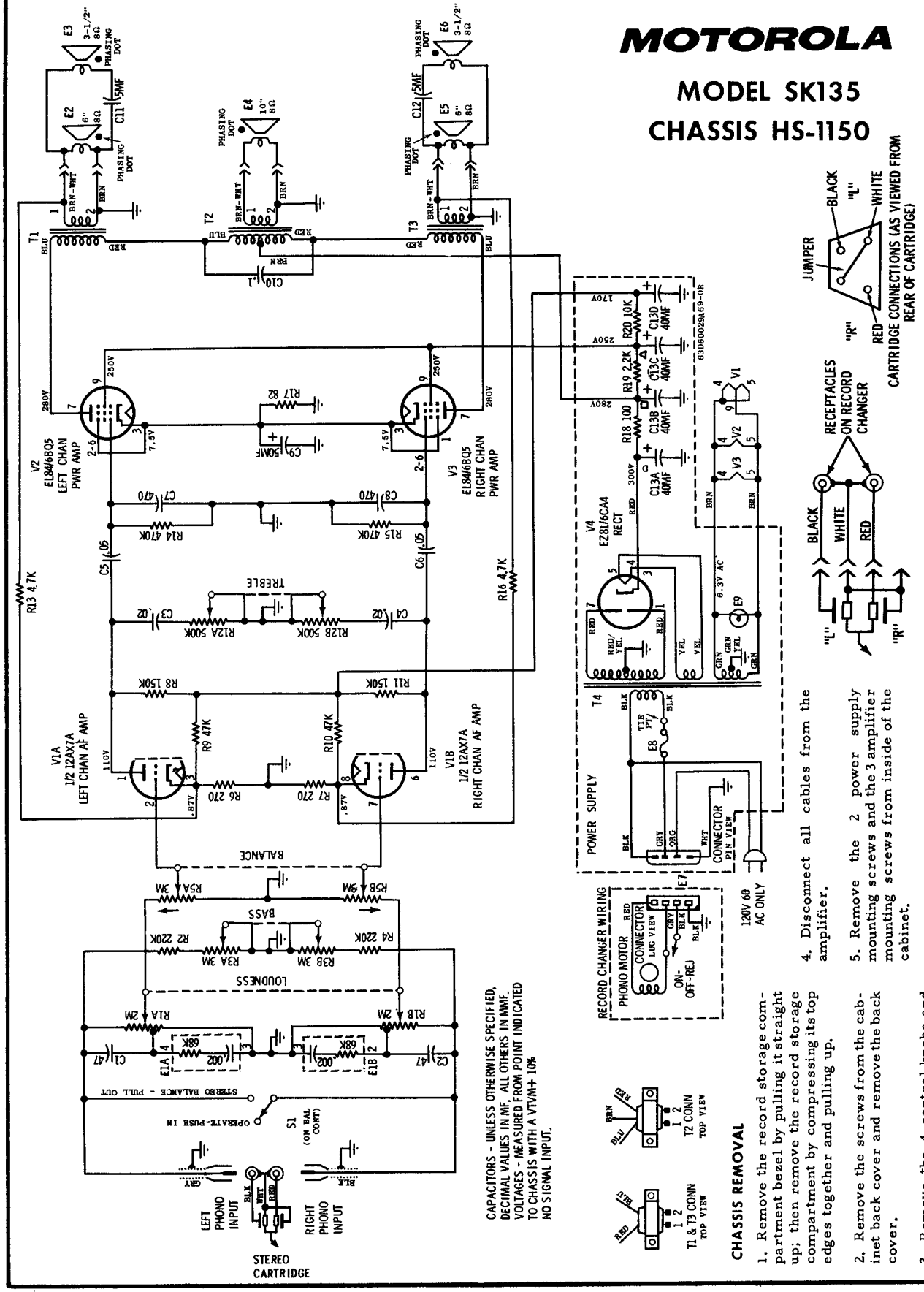

CAPACITORS - UNLESS OTHERWISE SPECIFIED, DECIMAL VALUES IN MF, ALL OTHERS IN MMF.
VOLTAGES - MEASURED FROM POINT INDICATED TO CHASSIS WITH A VTVM+ 10% NO SIGNAL INPUT.

CHASSIS REMOVAL

1. Remove the record storage compartment bezel by pulling it straight up; then remove the record storage compartment by compressing its top edges together and pulling up.
2. Remove the screws from the cabinet back cover and remove the back cover.
3. Remove the 4 control knobs and the 2 cup nuts on the control shafts.
4. Disconnect all cables from the amplifier.
5. Remove the 2 power supply mounting screws and the 3 amplifier mounting screws from inside of the cabinet.
6. Remove chassis from cabinet.

MOTOROLA

MODELS SK147,148,150,154,164,165, SKR147,148,150,153,154,164,165 CHASSIS HS-1141,1197,1198

The SK models are stereophonic amplifiers using HS-1197 pre-amplifier (this page) and HS-1198 power amplifier (page 80). The SKR types use the same amplifiers and HS-1141 tuner (p. 81).

HS-1197 PRE-AMP SCHEMATIC DIAGRAM

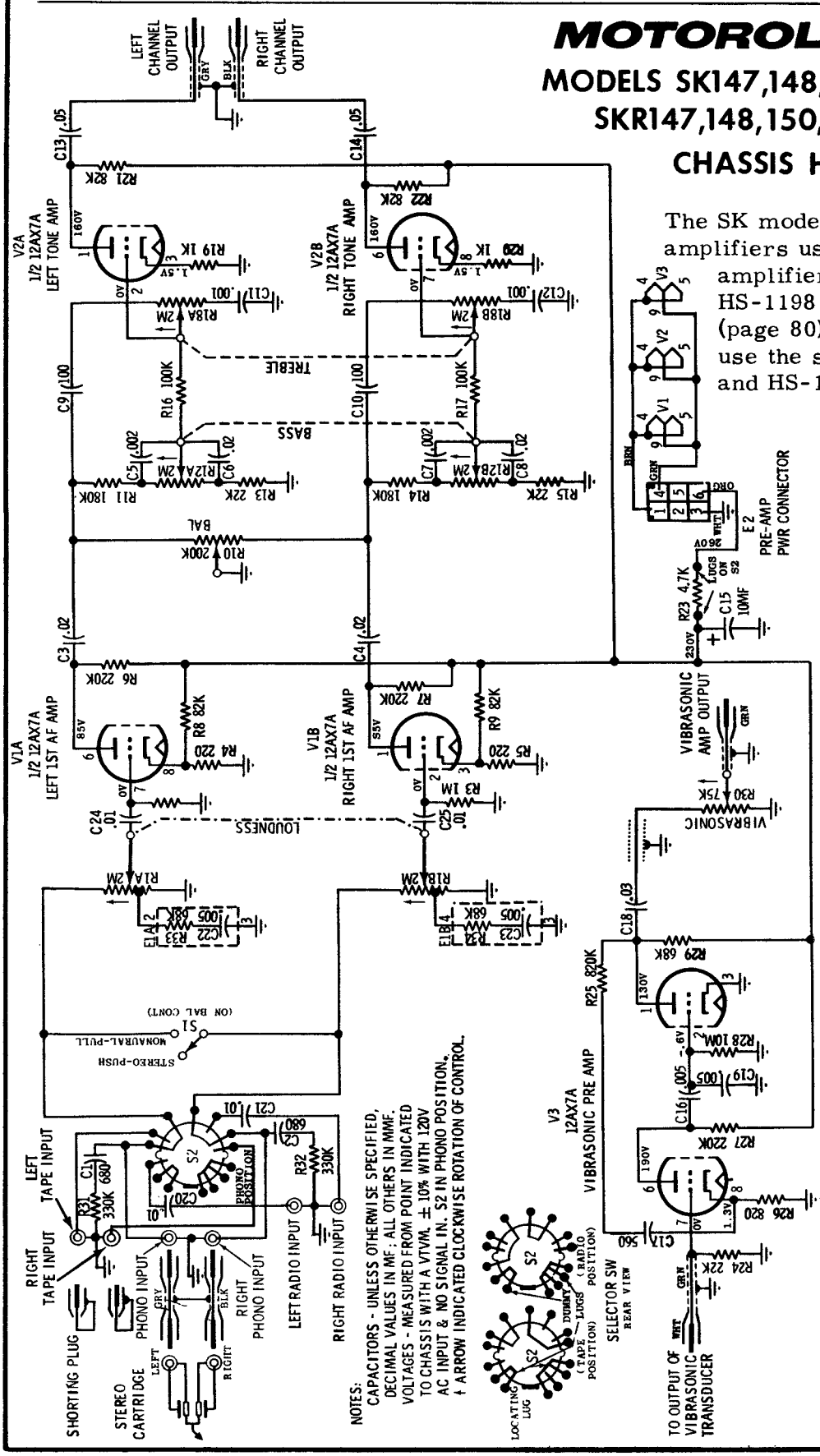

CHASSIS REMOVAL (HS-1141)

1. Remove cabinet back cover mounting screws and cabinet back cover.
2. On models that use a record well, remove the well as follows: Remove record well bezel by lifting straight up, then remove well by compressing top edges and pulling up.
3. Unplug all cables and leads; remove 2 chassis mounting wing nuts and washers; then lift chassis out of cabinet.

CHASSIS REMOVAL (HS-1197)

1. On models that contain the built-in AM-FM tuner, HS-1141, it will be necessary to remove the HS-1141 as described above because the HS-1199 pre-amp is attached to it.
2. On models not containing the AM-FM tuner, remove the cabinet back cover as above, disconnect all cables, then remove the 2 chassis mounting hex nuts and 2 rubber sleeves with eyelets and remove chassis from cabinet.

CHASSIS REMOVAL (POWER AMP HS-1198)

1. Remove cabinet back cover mounting screws and cabinet back cover.
2. Disconnect all cables, remove chassis mounting screws then the chassis.

MOTOROLA Chassis HS-1198 Amplifier (for list of models see page 79)

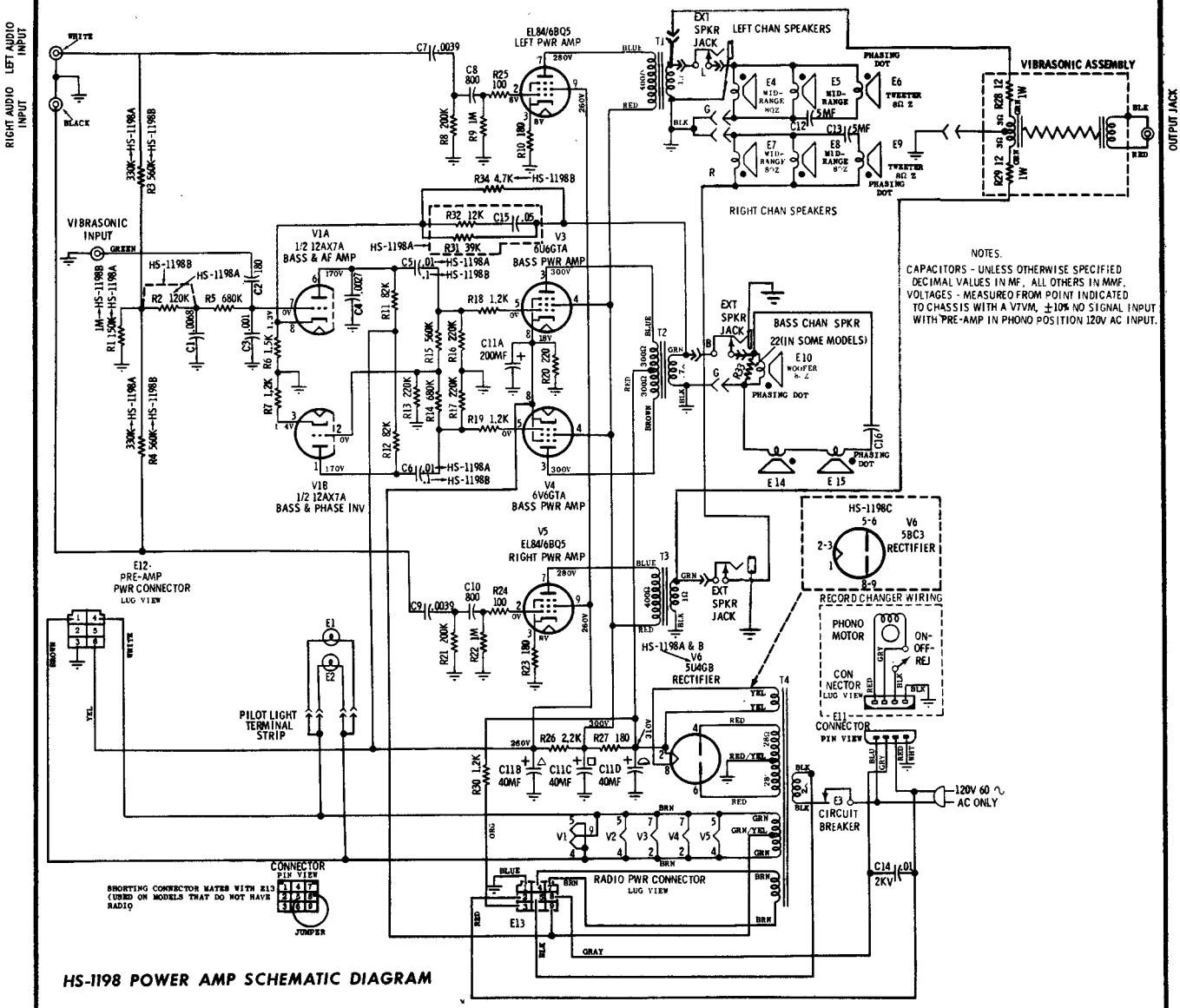

HS-1198 POWER AMP SCHEMATIC DIAGRAM

Additional material for HS-1141 Tuner , see page 81

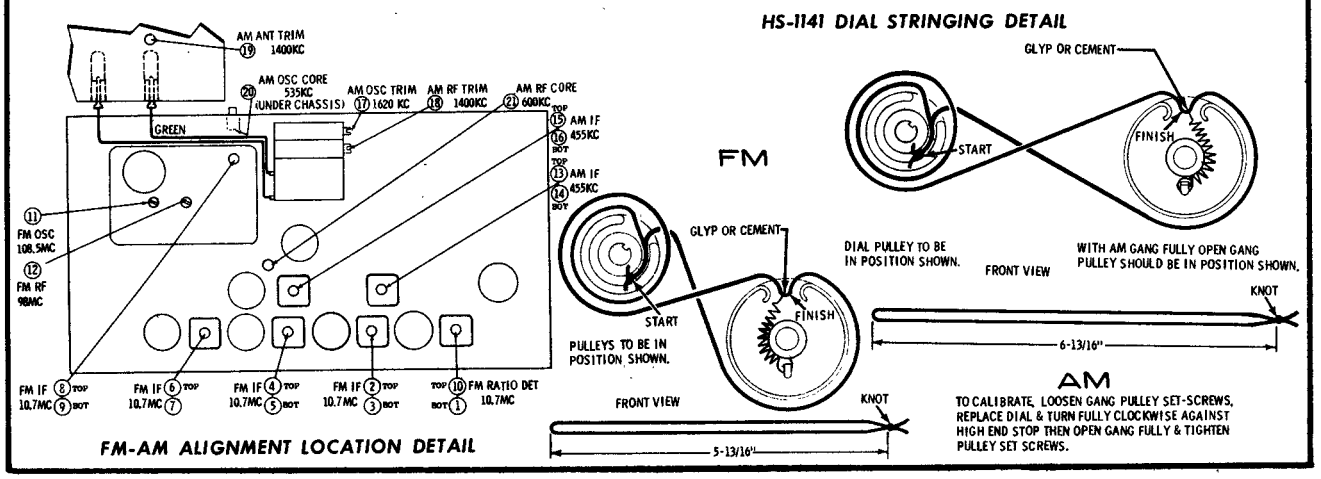

FM-AM ALIGNMENT LOCATION DETAIL

HS-1141 DIAL STRINGING DETAIL

MOTOROLA Chassis HS-1141 Tuner used in various models, see pages 79 and 82

(Tuner HK81 uses HS-1141 and is used with various models)

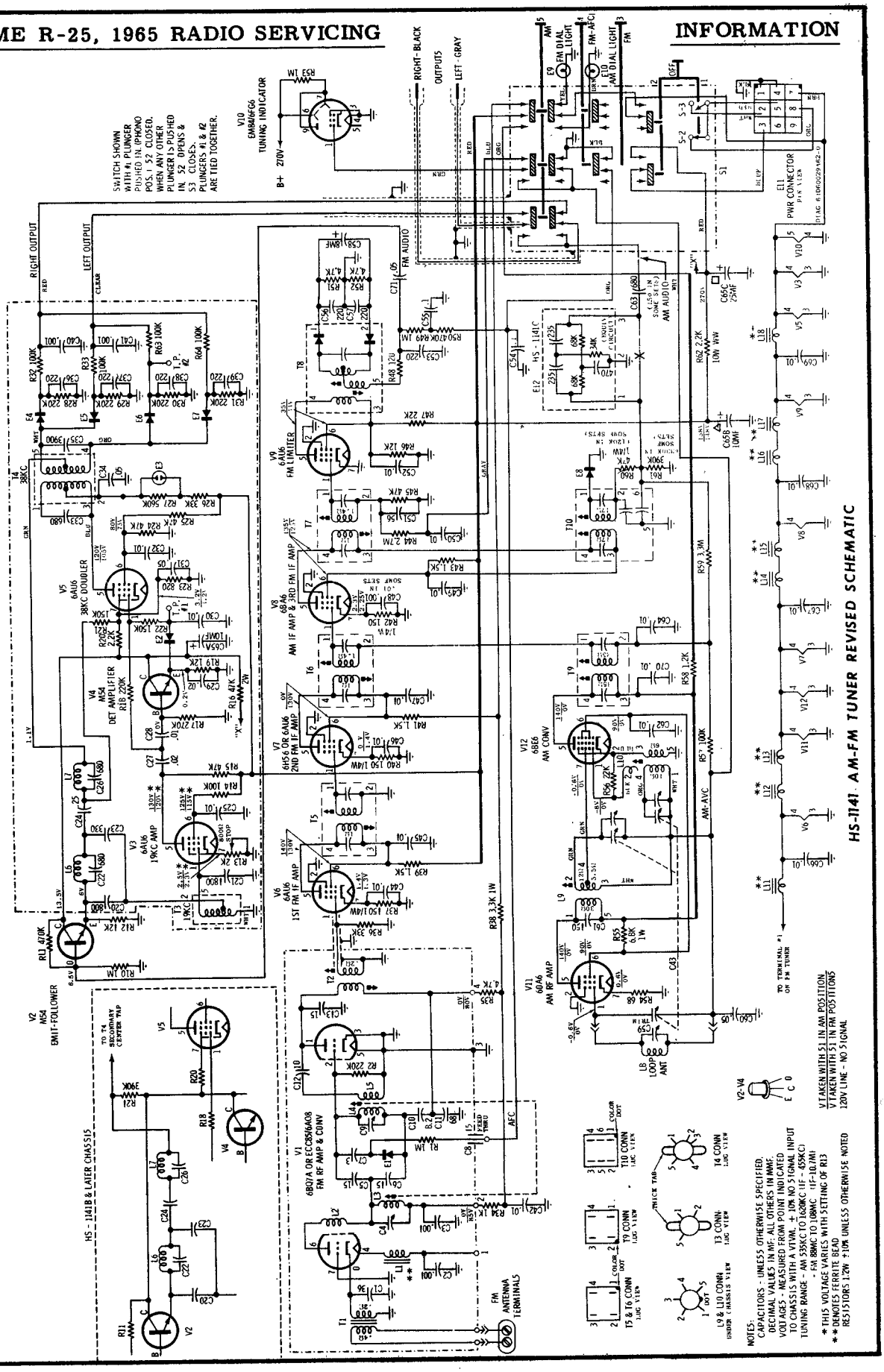

MOTOROLA

MODELS SK151,152, SKR151,152,155,156,157,158,159,160

CHASSIS HS-1141,1199,1200,1200-1

Models with SK prefix use HS-1199 pre-amplifier (see page 83) and HS-1200 or HS-1200-1 (see circuit below) for stereo reproduction. Stereo models with SKR prefix use the same amplifiers and HS-1141 tuner (diagram on page 81). Other tuner data on page 80.

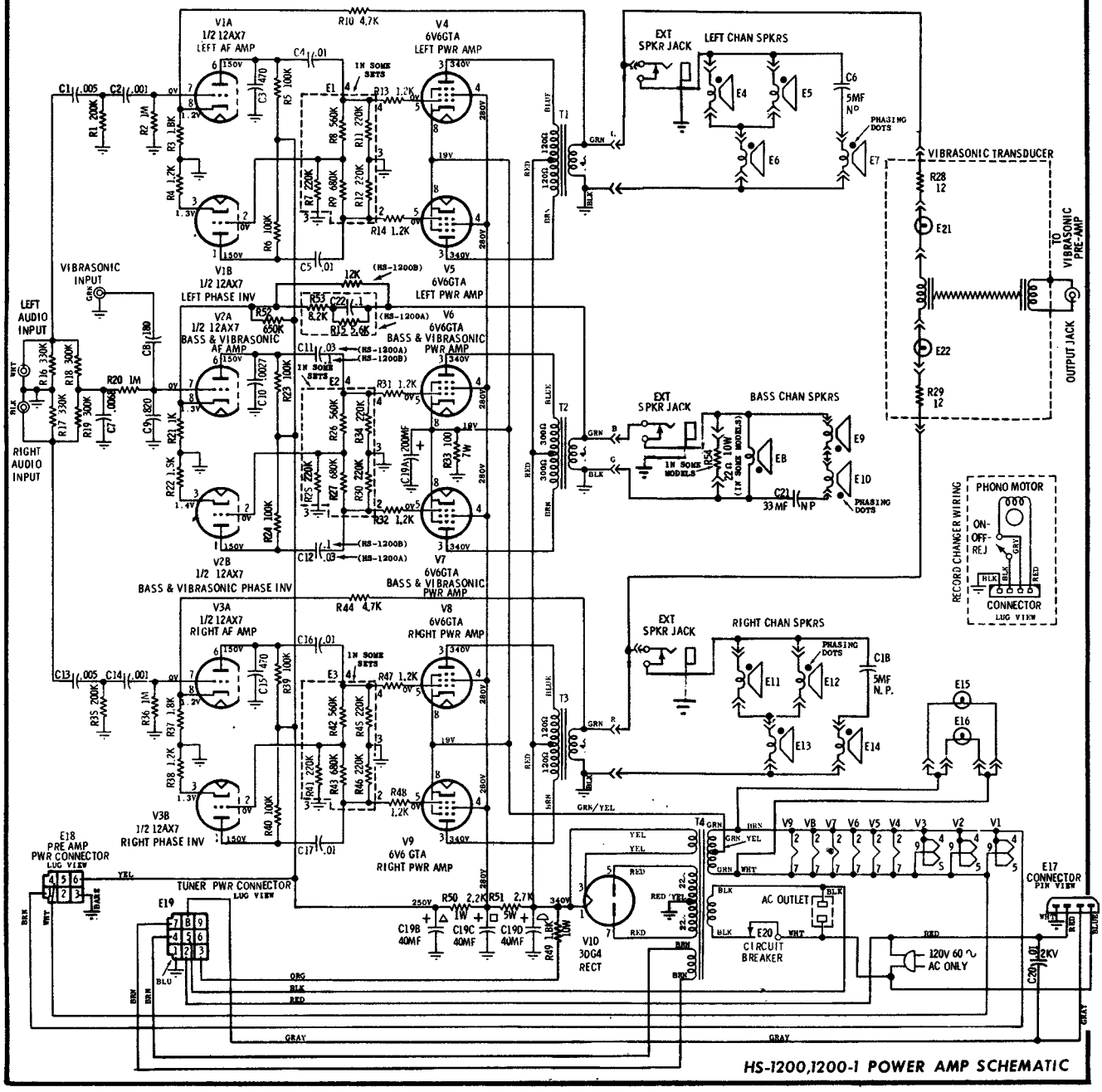

HS-1200,1200-1 POWER AMP SCHEMATIC

MOTOROLA Chassis HS-1199 Pre-Amplifier

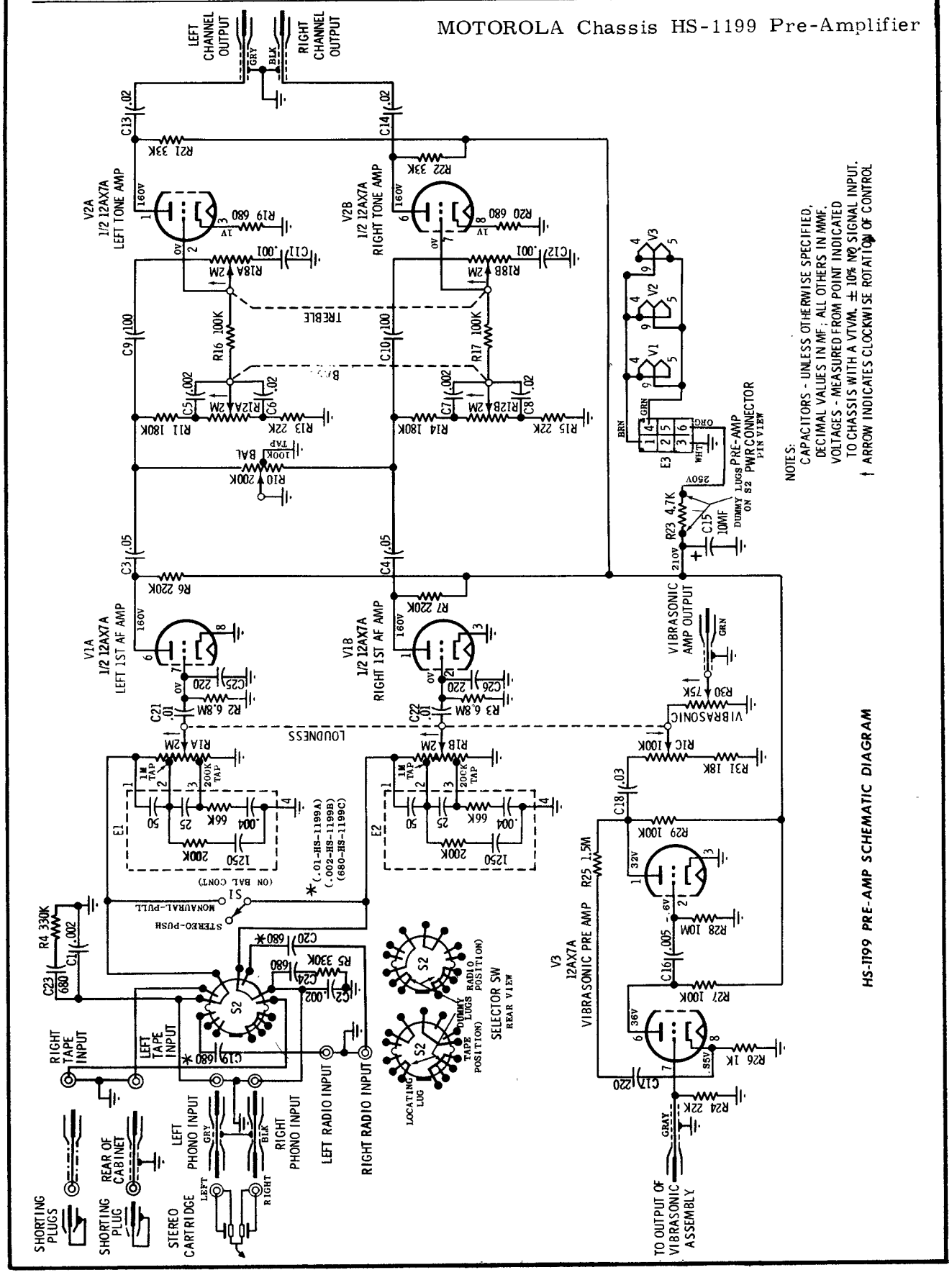

NOTES:
CAPACITORS - UNLESS OTHERWISE SPECIFIED, DECIMAL VALUES IN MF; ALL OTHERS IN MMF.
VOLTAGES - MEASURED FROM POINT INDICATED TO CHASSIS WITH A VTVM. ± 10% NO SIGNAL INPUT.
↑ ARROW INDICATES CLOCKWISE ROTATION OF CONTROL

HS-1199 PRE-AMP SCHEMATIC DIAGRAM

MOTOROLA

MODELS SK180A,181A,182A, 183A, 190A,191A,192A,193A SD194A,195A,196A CHASSIS HS-1241,1259, 1264,1328

(Material on pages 84 through 87)

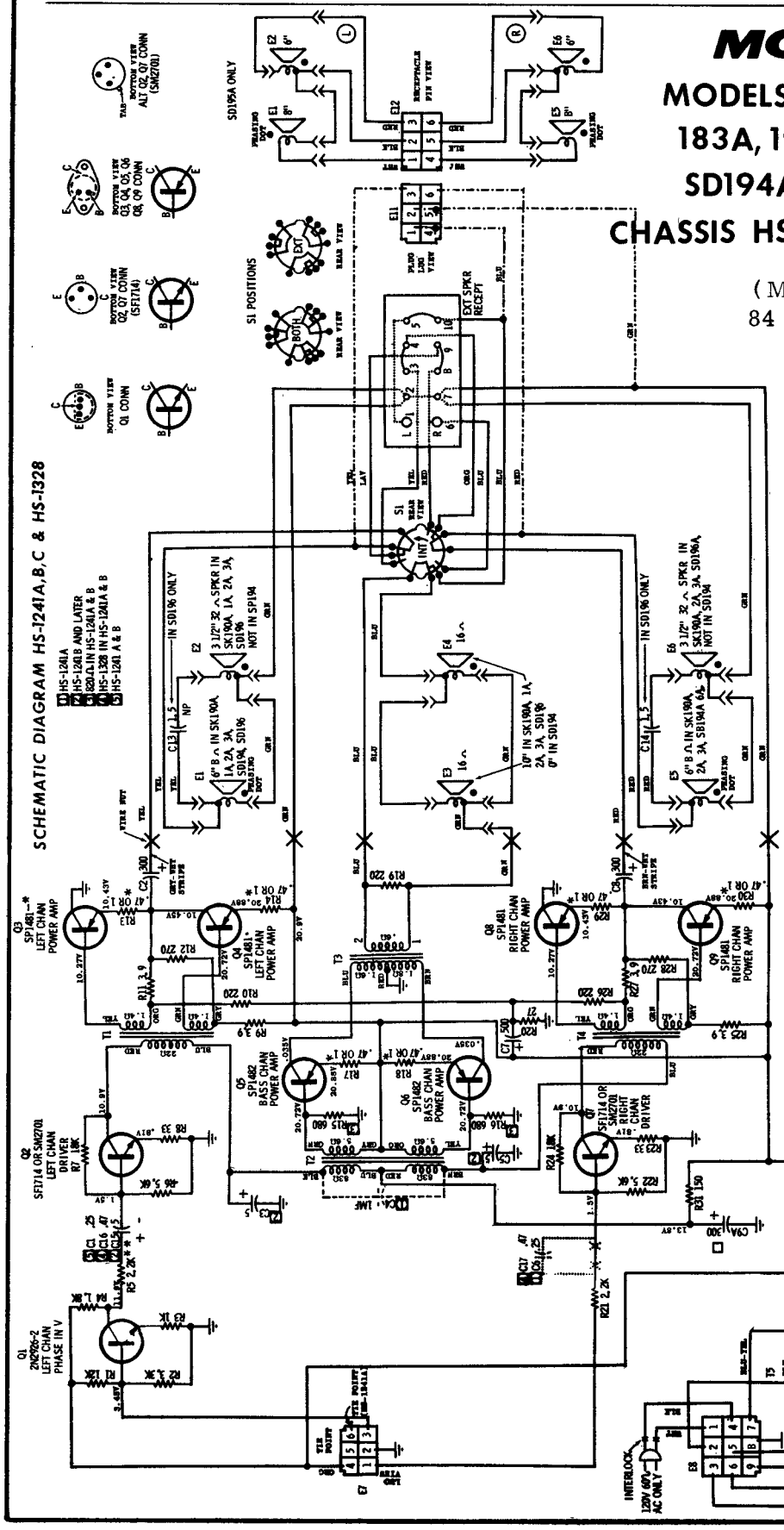

SK180A, 181A, 182A, 183A (chassis HS-1259 - tuner pre-amp, HS-1264 - power amp) - Stereophonic consoles with AM-FM multiplex tuners. Features include a two-channel, 10 watt (music power) amplifier and 6 speakers.

SK190A, 191A, 192A, 193A (chassis HS-1259 - tuner pre-amp, HS-1241 - power amp) - Stereophonic consoles with AM-FM multiplex tuners. Features include a three-channel, 20 watt (music power) amplifier with 6 speakers.

SD194A, 195A (chassis HS-1259 - tuner pre-amp, HS-1241 - power amp) - Stereophonic consoles with AM-FM multiplex tuners. Features include a three-channel, 20 watt (music power) amplifier with 4 speakers.

SD196A (chassis HS-1259 - tuner pre-amp, chassis HS-1328 - power amp) - Stereophonic console with AM-FM multiplex tuners. Features include a three-channel, 20 watt (music power) amplifier with 6 speakers.

MOTOROLA

MODELS SK180A,181A,182A,183A, 190A,191A,192A,193A SD194A,195A,196A CHASSIS HS-1241,1259, 1264,1328

(Continued)

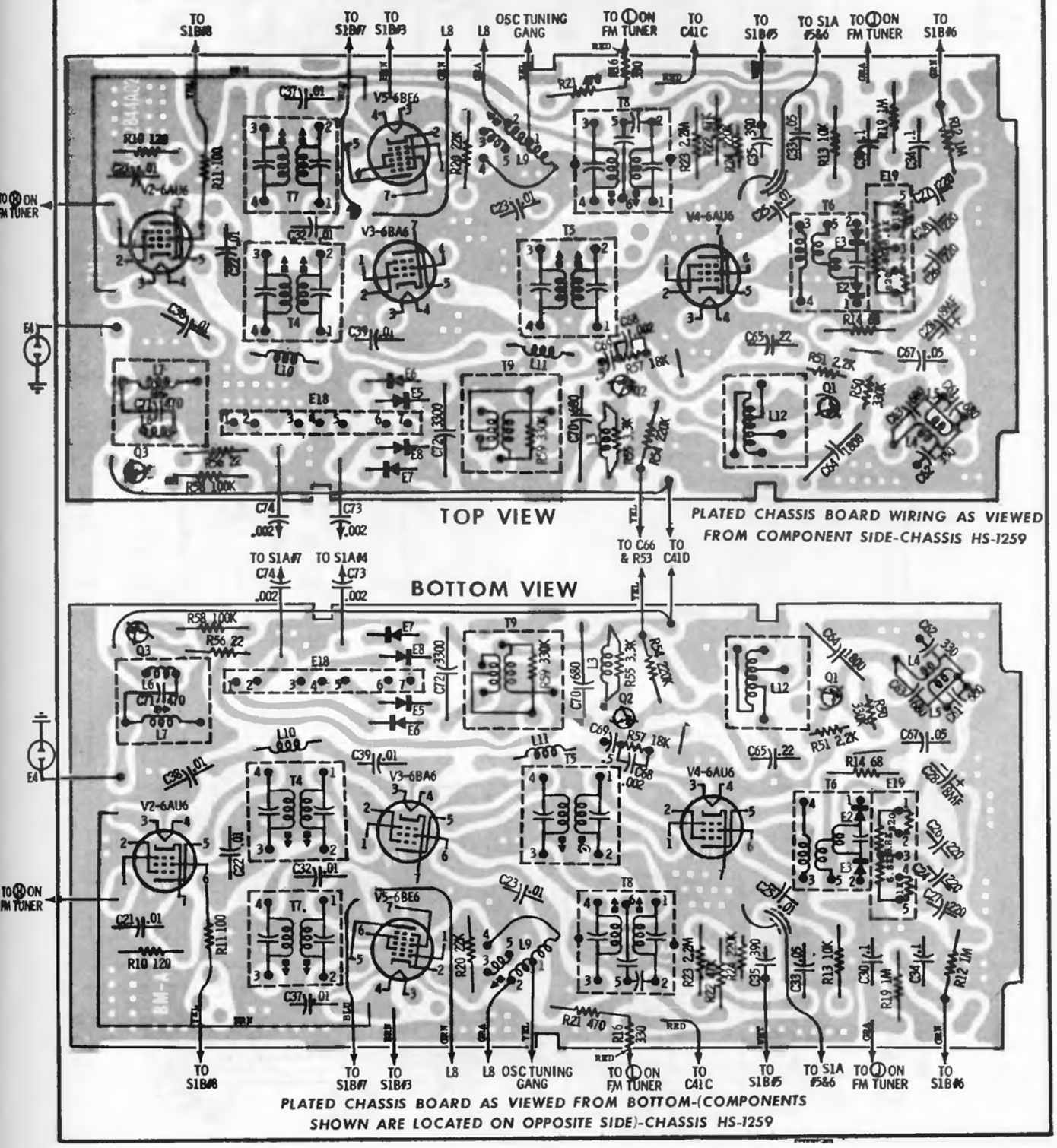

MOTOROLA

MODELS SK180A,181A,182A,183A,
190A,191A,192A,193A SD194A,195A,196A
CHASSIS HS-1241,1259,1264,1328
(Continued)

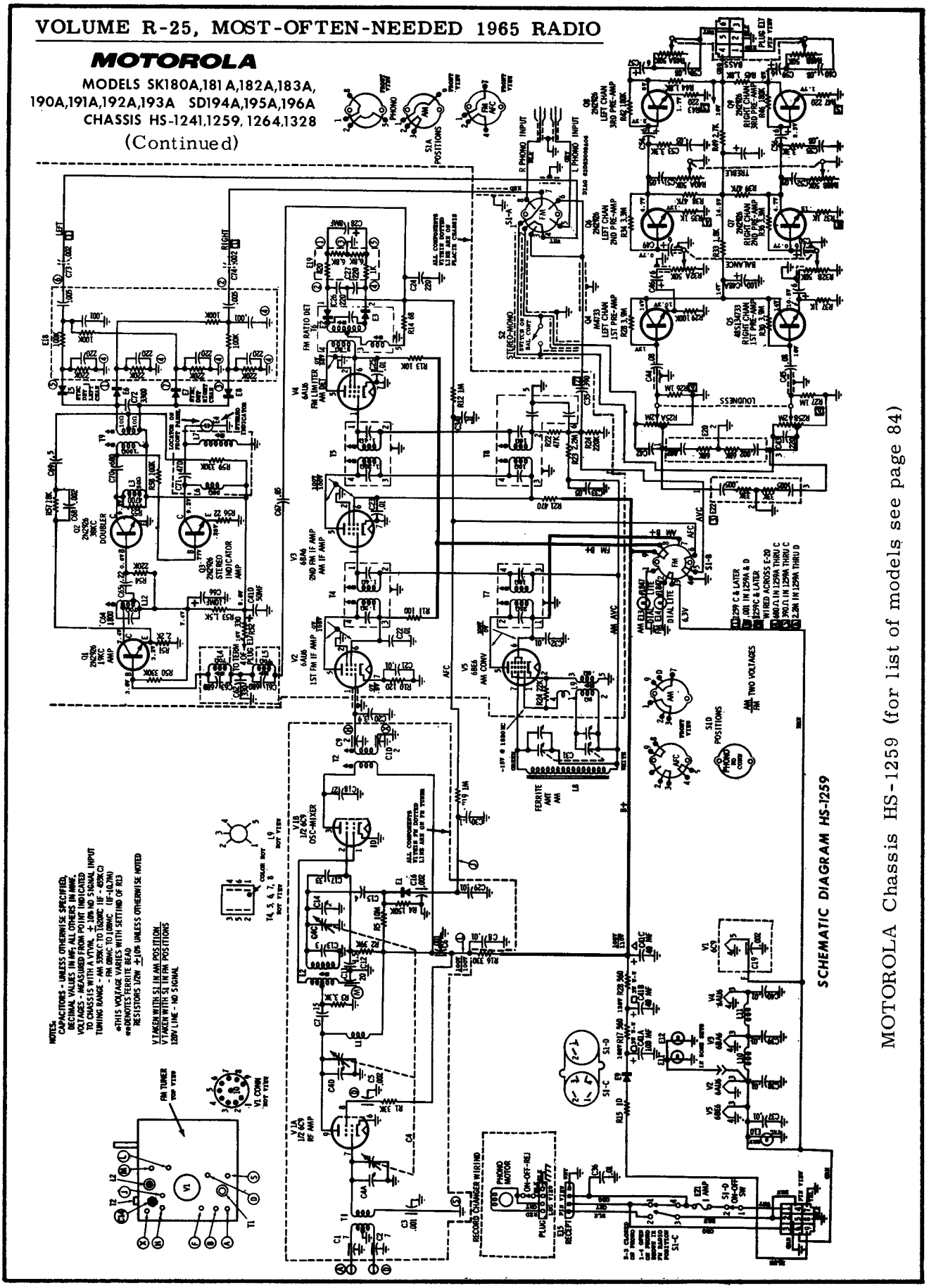

MOTOROLA Chassis HS-1259 (for list of models see page 84)

MOTOROLA
(Continued)

MODELS SK180A,181A,182A,183A, 190A,191A,192A,193A SD194A,195A,196A
CHASSIS HS-1241,1259, 1264,1328

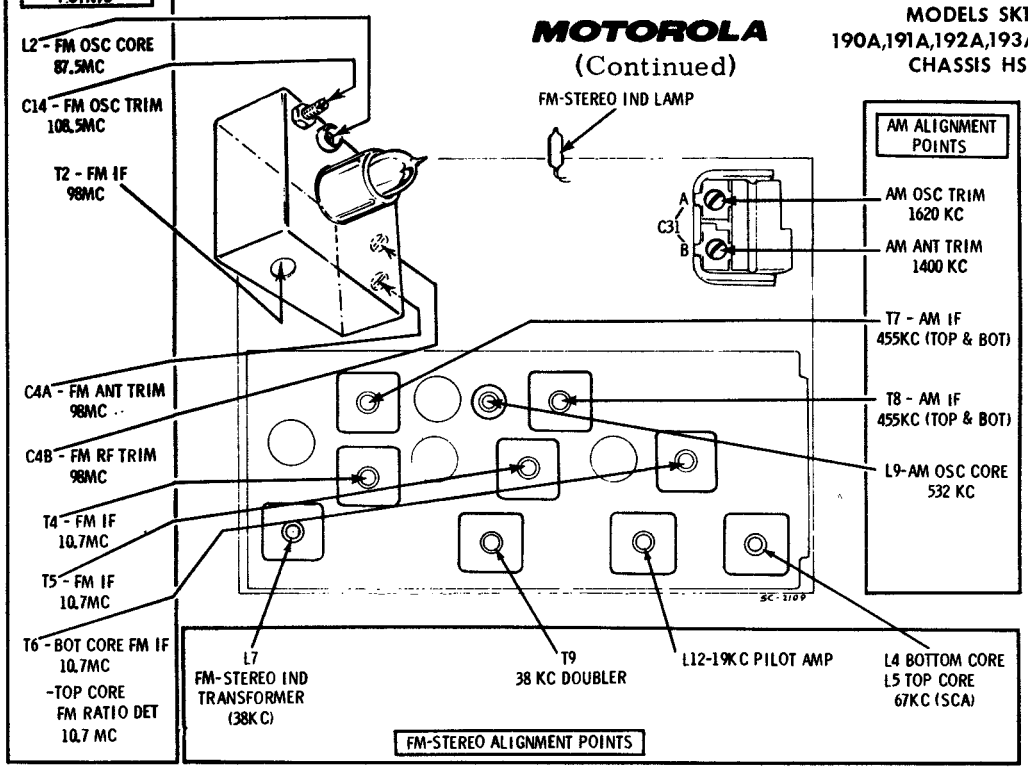

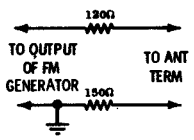

FM GENERATOR TERMINATION DETAIL

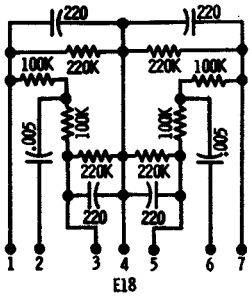

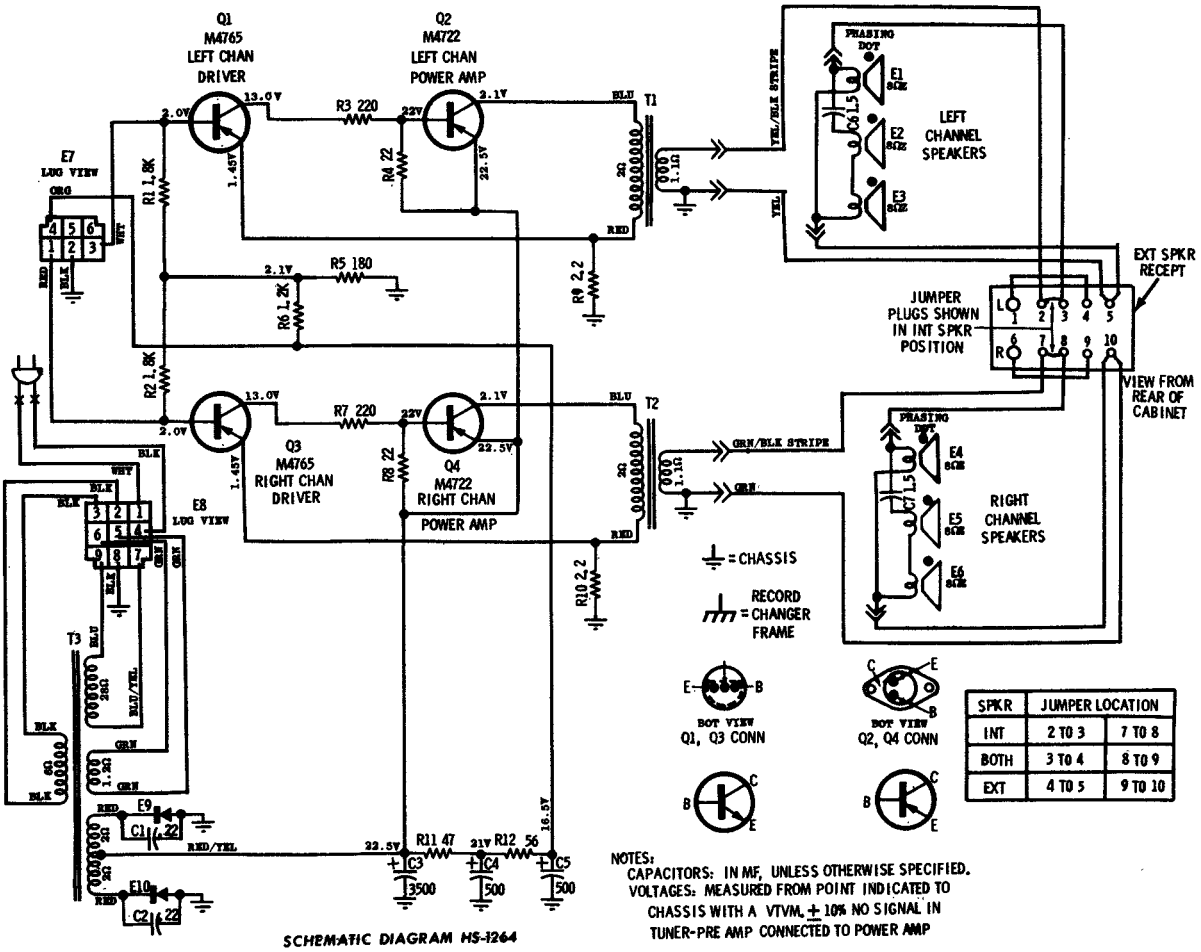

SPKR	JUMPER LOCATION	
INT	2 TO 3	7 TO 8
BOTH	3 TO 4	8 TO 9
EXT	4 TO 5	9 TO 10

NOTES:
CAPACITORS: IN MF, UNLESS OTHERWISE SPECIFIED.
VOLTAGES: MEASURED FROM POINT INDICATED TO CHASSIS WITH A VTVM, ± 10% NO SIGNAL IN TUNER-PRE AMP CONNECTED TO POWER AMP

SCHEMATIC DIAGRAM HS-1264

MOTOROLA

CHASSIS HS-1260, 1323

(Continued)

MOTOROLA Chassis HS-1260, HS-1323, Models SK172A, -173A, -175A, -176A, -177A, -178A, ST82A

(Continued on next page)

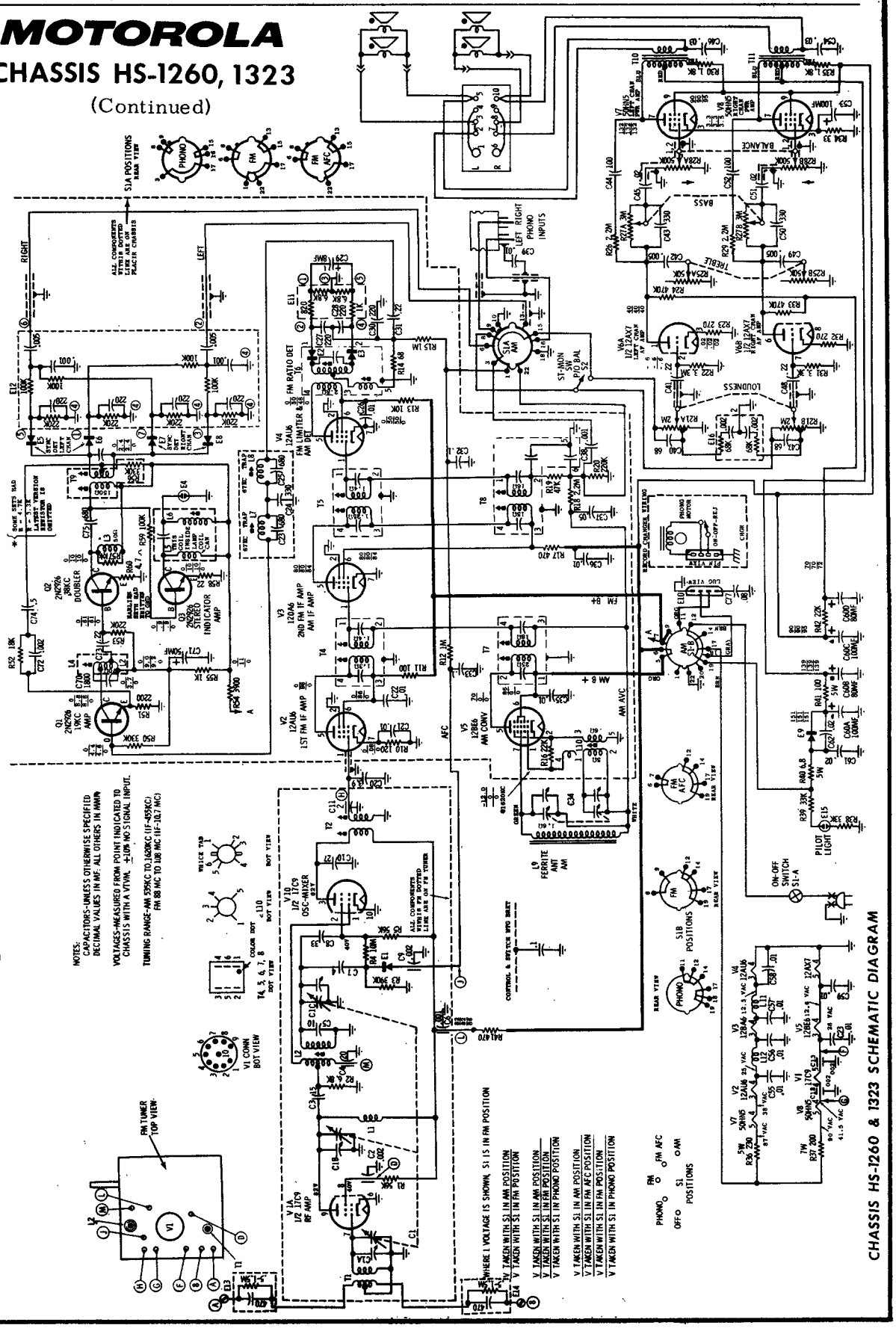

MOTOROLA Chassis HS-1260, HS-1323, Continued

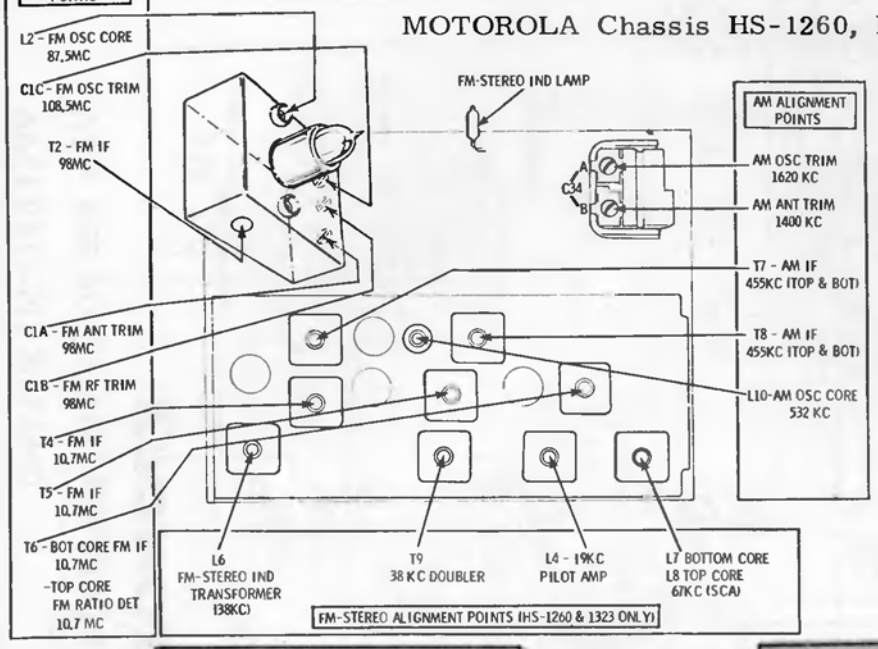

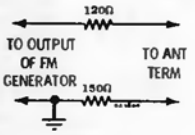

FM GENERATOR TERMINATION DETAIL

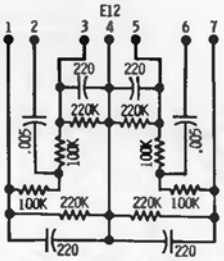

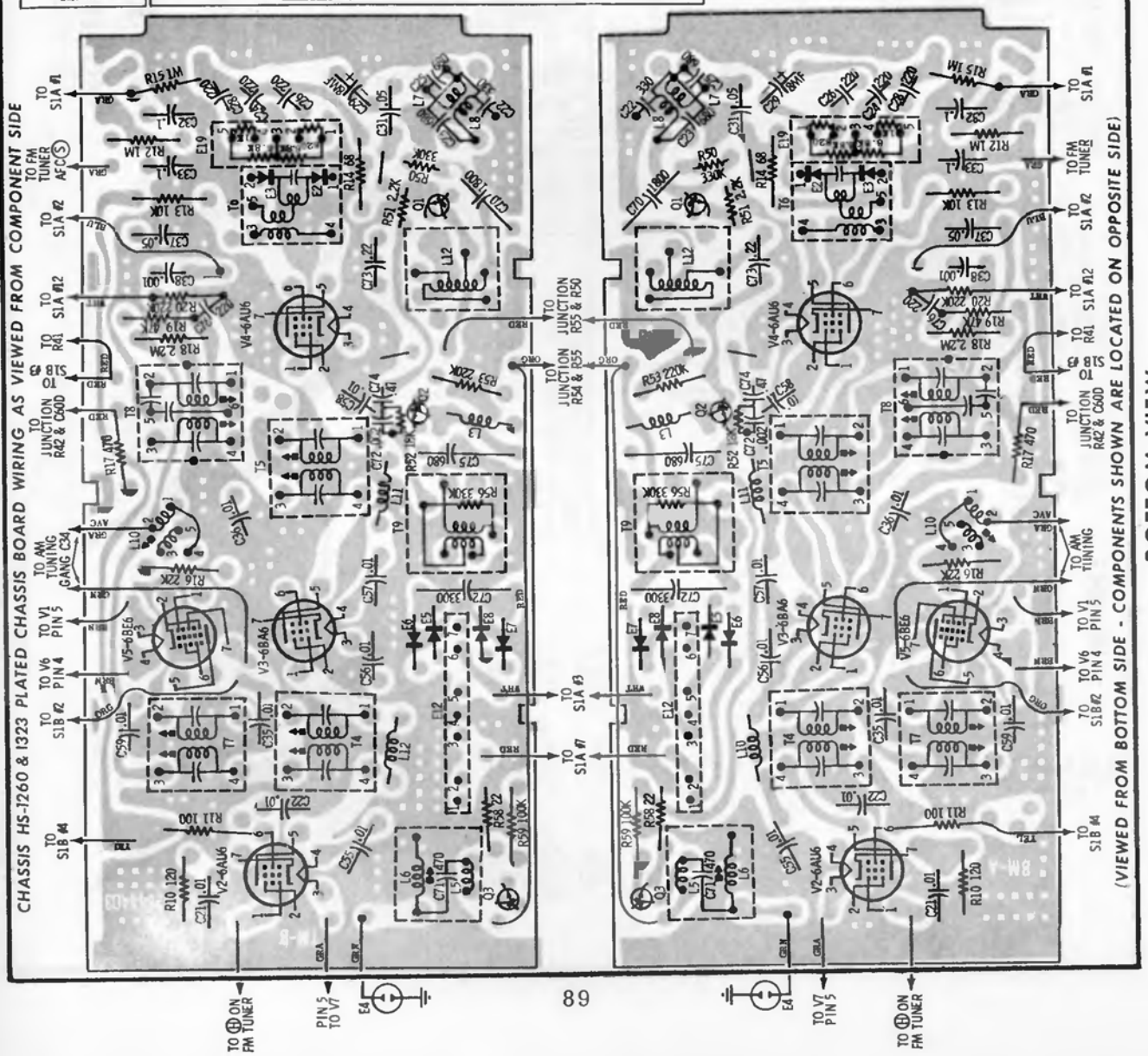

MOTOROLA

MODELS PK190A,191A,PP90A,91A, 92A

CHASSIS HS-1242,1266

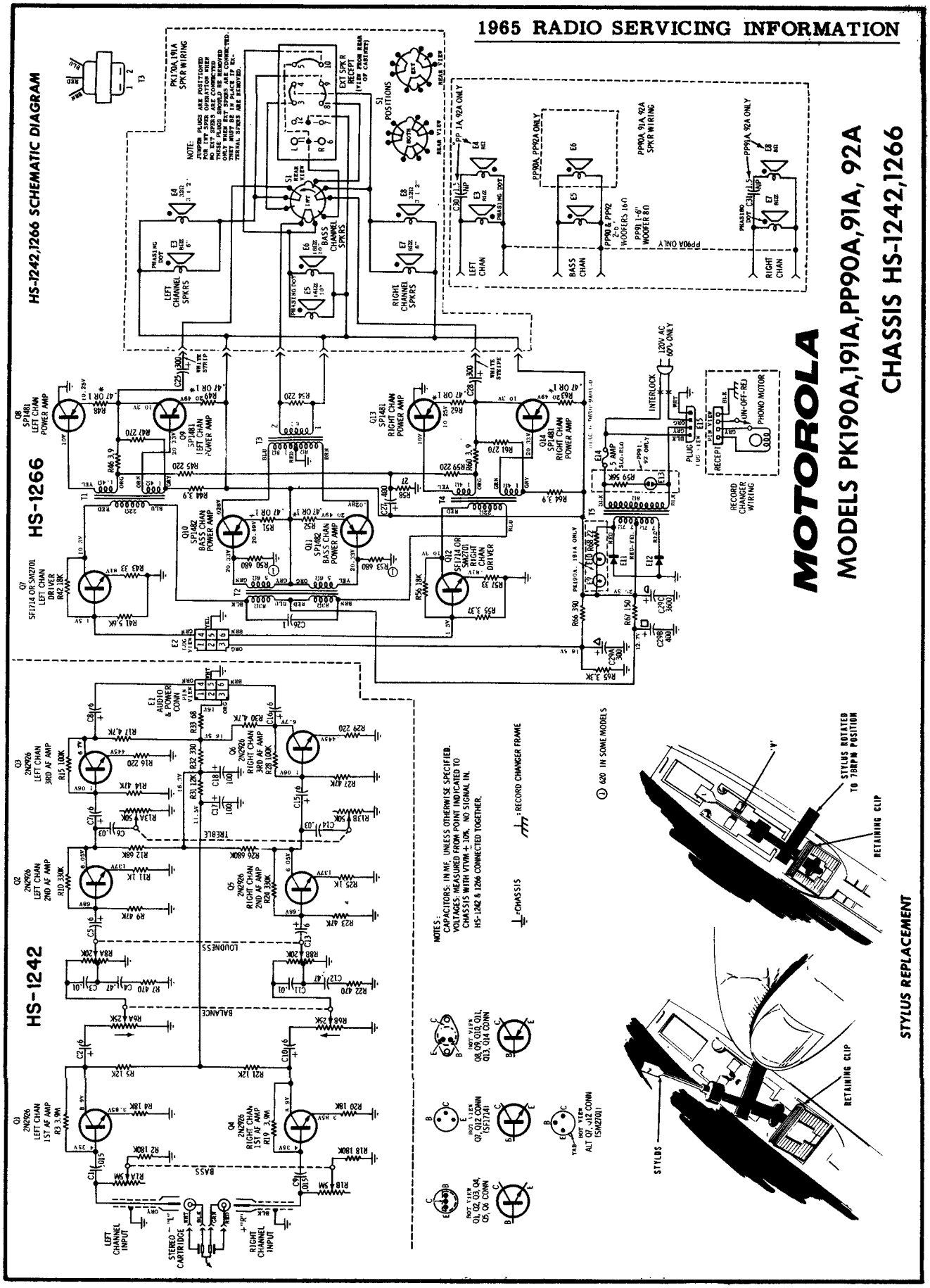

MOTOROLA

MODELS PK175A,176A,177A,178A

CHASSIS HS—1261

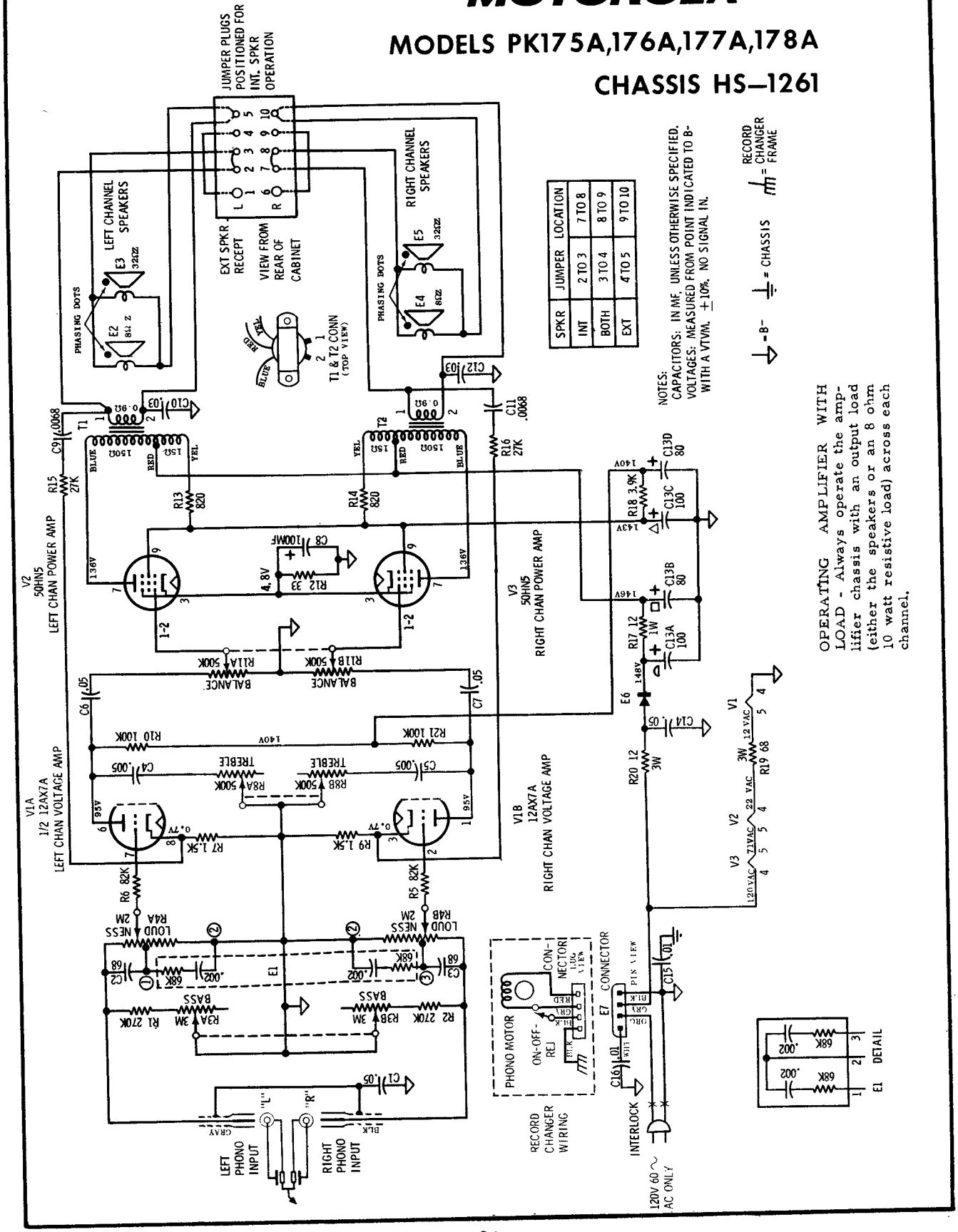

SPKR	JUMPER	LOCATION
INT	2 TO 3	7 TO 8
	3 TO 4	8 TO 9
BOTH	4 TO 5	9 TO 10
EXT		

NOTES:
CAPACITORS: IN MF, UNLESS OTHERWISE SPECIFIED.
VOLTAGES: MEASURED FROM POINT INDICATED TO B- WITH A VTVM. ±10%. NO SIGNAL IN.

OPERATING AMPLIFIER WITH LOAD - Always operate the amplifier chassis with an output load (either the speakers or an 8 ohm 10 watt resistive load) across each channel.

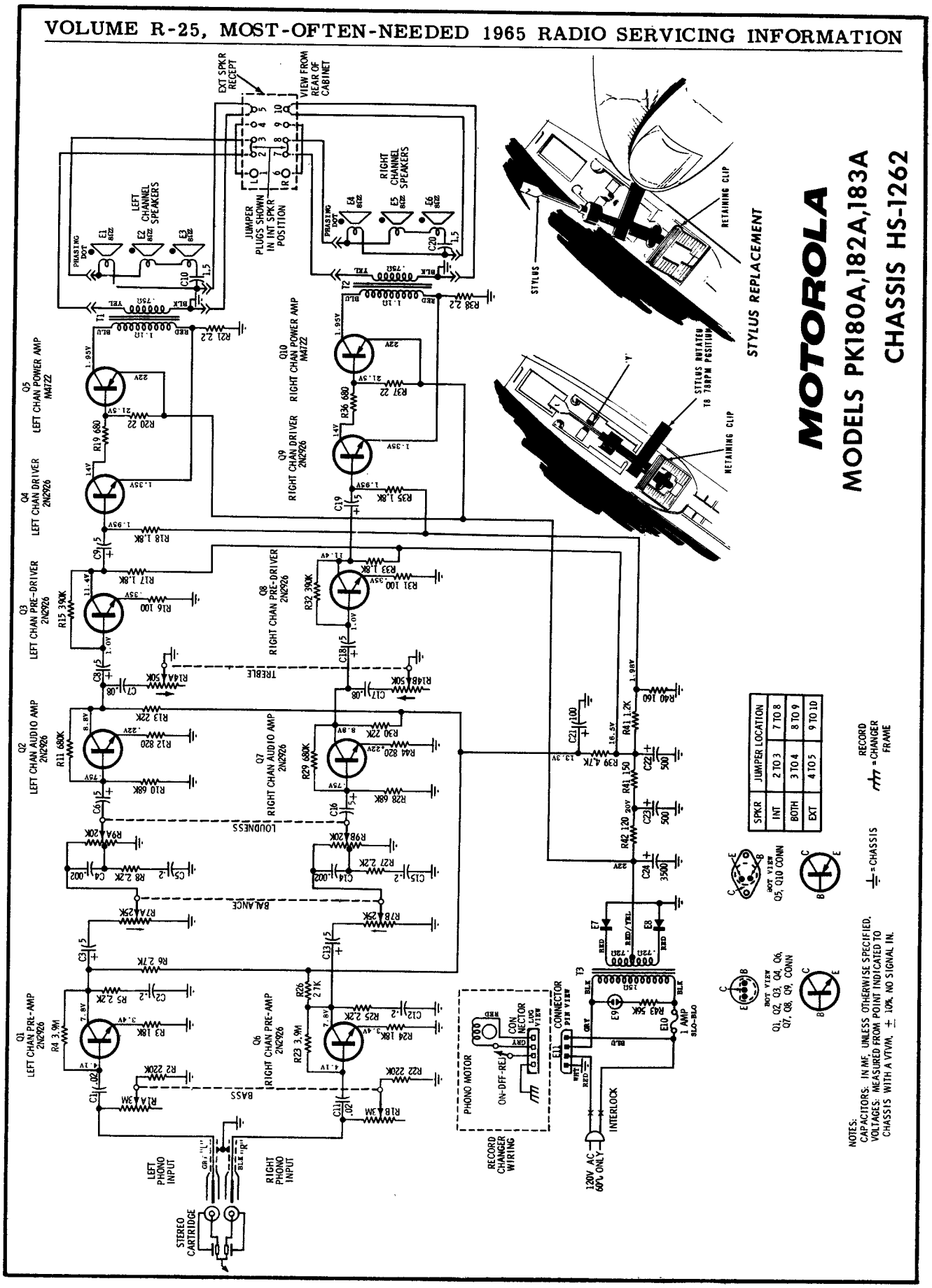
MOTOROLA
MODELS PK180A,182A,183A
CHASSIS HS-1262
STYLUS REPLACEMENT
STYLUS
RETAINING CLIP
STYLUS ROTATED TO 78RPM POSITION
EXT SPKR RECEPT
VIEW FROM REAR OF CABINET
JUMPER PLUGS SHOWN IN INT SPKR POSITION
LEFT CHANNEL SPEAKERS
RIGHT CHANNEL SPEAKERS
Q1 LEFT CHAN PRE-AMP 2N2926
Q2 LEFT CHAN AUDIO AMP 2N2926
Q3 LEFT CHAN PRE-DRIVER 2N2926
Q4 LEFT CHAN DRIVER 2N2926
Q5 LEFT CHAN POWER AMP M4722
Q6 RIGHT CHAN PRE-AMP 2N2926
Q7 RIGHT CHAN AUDIO AMP 2N2926
Q8 RIGHT CHAN PRE-DRIVER 2N2926
Q9 RIGHT CHAN DRIVER 2N2926
Q10 RIGHT CHAN POWER AMP M4722
BASS
BALANCE
LOUDNESS
TREBLE
LEFT PHONO INPUT
RIGHT PHONO INPUT
STEREO CARTRIDGE
PHONO MOTOR
ON-OFF-REL
CON NECTOR
CONNECTOR PIN VIEW
RECORD CHANGER WIRING
120V AC 60V ONLY
INTERLOCK
1 AMP SLO-BLO
SPKR | JUMPER LOCATION
INT | 2 TO 3 | 7 TO 8
BOTH | 3 TO 4 | 8 TO 9
EXT | 4 TO 5 | 9 TO 10
RECORD CHANGER FRAME
= CHASSIS
BOT VIEW Q5, Q10 CONN
BOT VIEW Q1, Q2, Q3, Q4, Q6, Q7, Q8, Q9, CONN
NOTES:
CAPACITORS: IN MF, UNLESS OTHERWISE SPECIFIED.
VOLTAGES: MEASURED FROM POINT INDICATED TO CHASSIS WITH A VTVM. ± 10%. NO SIGNAL IN.

MOTOROLA

MODELS PP80A,PT81A
CHASSIS HS-1269

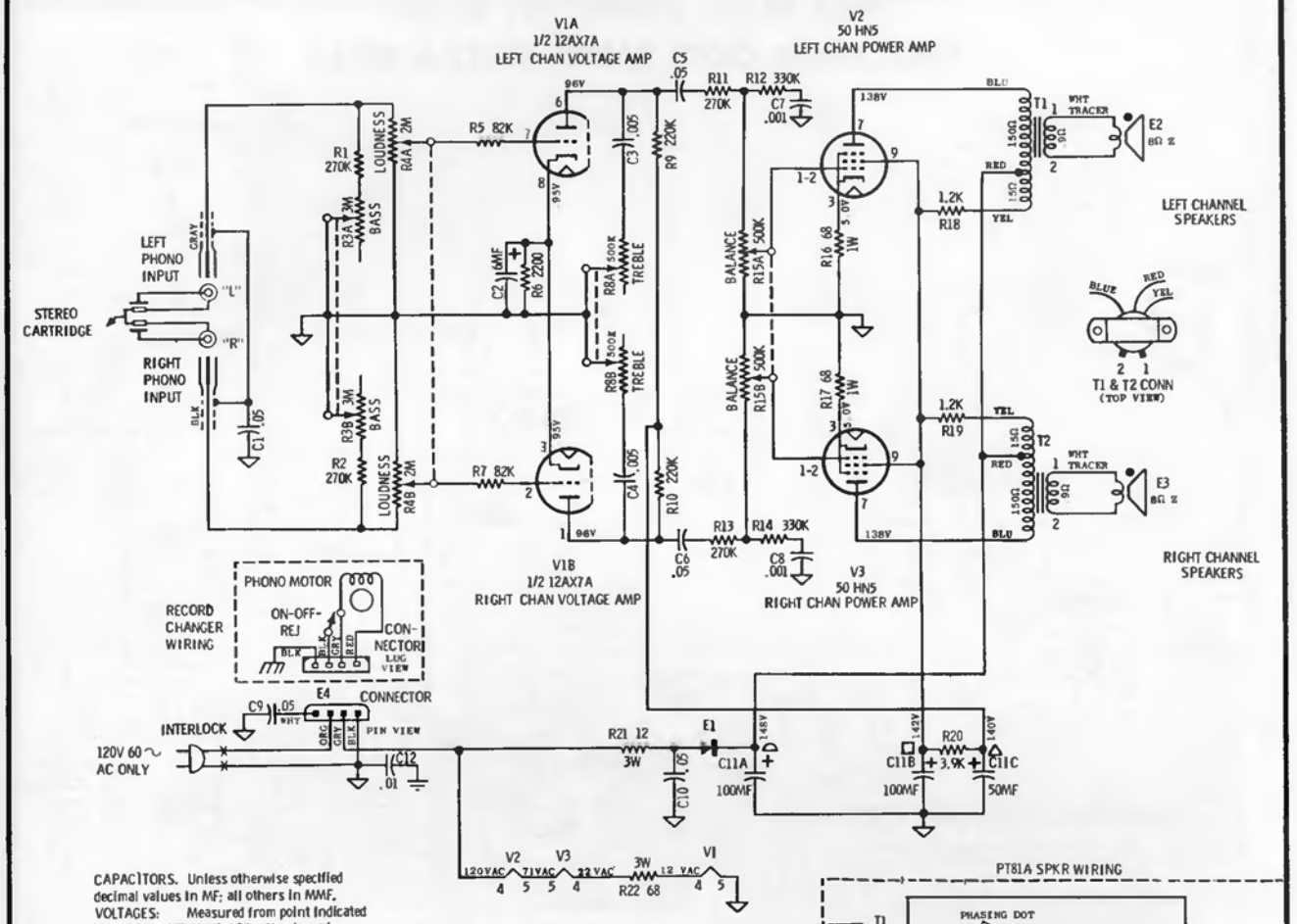

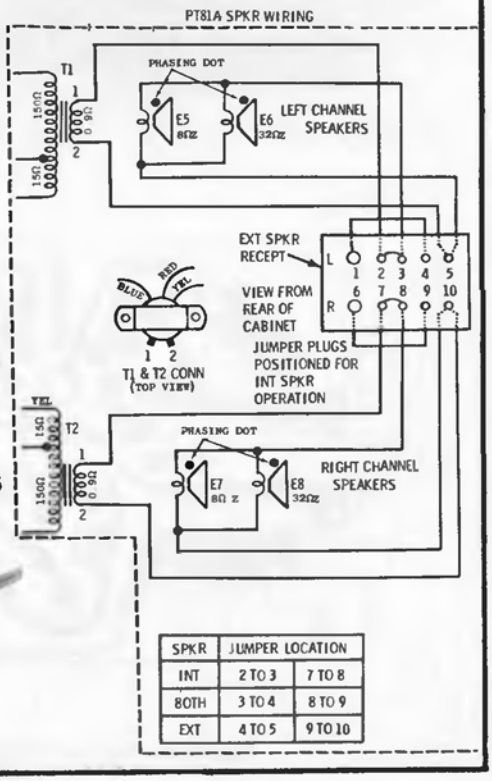

SPKR	JUMPER LOCATION	
INT	2 TO 3	7 TO 8
BOTH	3 TO 4	8 TO 9
EXT	4 TO 5	9 TO 10

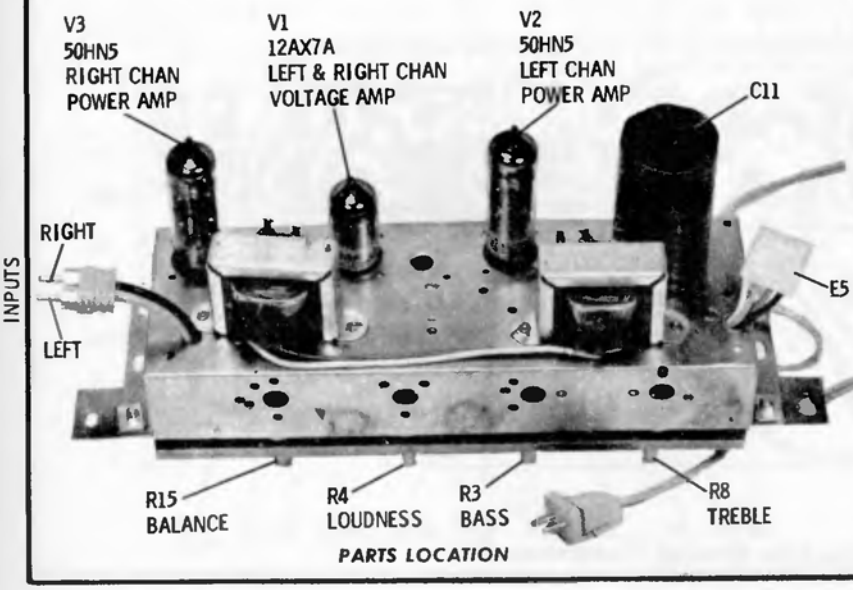

PARTS LOCATION

Packard Bell

TABLE MODEL RADIOS 5R11 & 5R12

TABLE MODEL CLOCK RADIOS 5RC13 & 5RC14

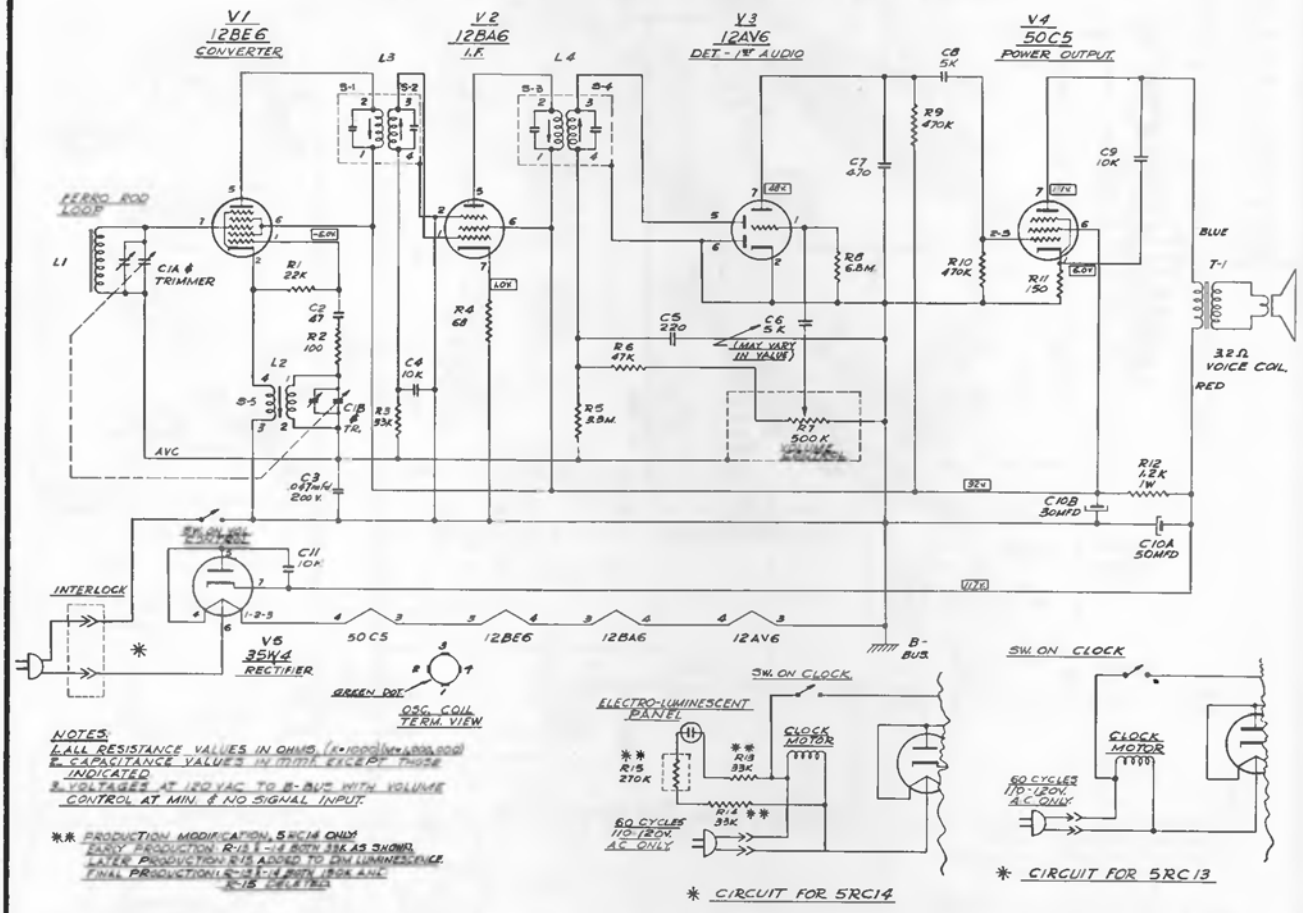

NOTES:
1. ALL RESISTANCE VALUES IN OHMS. (K=1000) (M=1,000,000)
2. CAPACITANCE VALUES IN MMF. EXCEPT THOSE INDICATED
3. VOLTAGES AT 120 VAC TO B-BUS WITH VOLUME CONTROL AT MIN. & NO SIGNAL INPUT.

** PRODUCTION MODIFICATION, 5RC14 ONLY
EARLY PRODUCTION: R-13 & R-14 BOTH 33K AS SHOWN.
LATER PRODUCTION: R-15 ADDED TO DIM LUMINESCENCE.
FINAL PRODUCTION: R-13 & R-14 BOTH 180K AND R-15 DELETED.

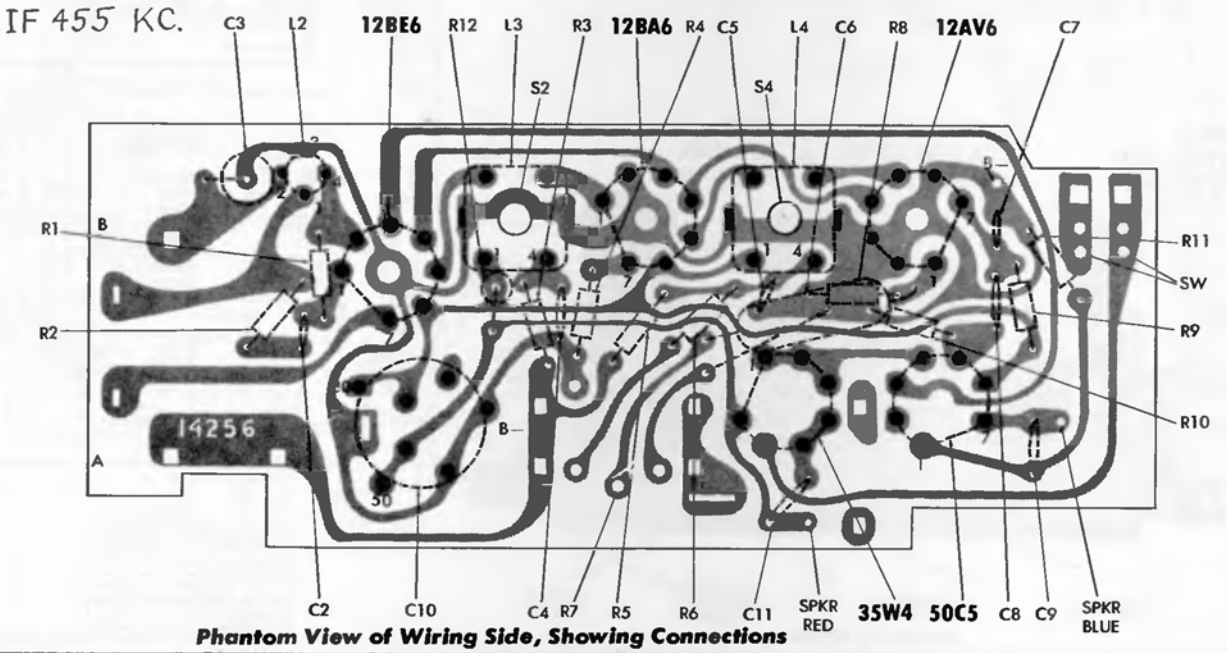

Phantom View of Wiring Side, Showing Connections

PHILCO

TRANSISTOR PORTABLE
MODEL T-69

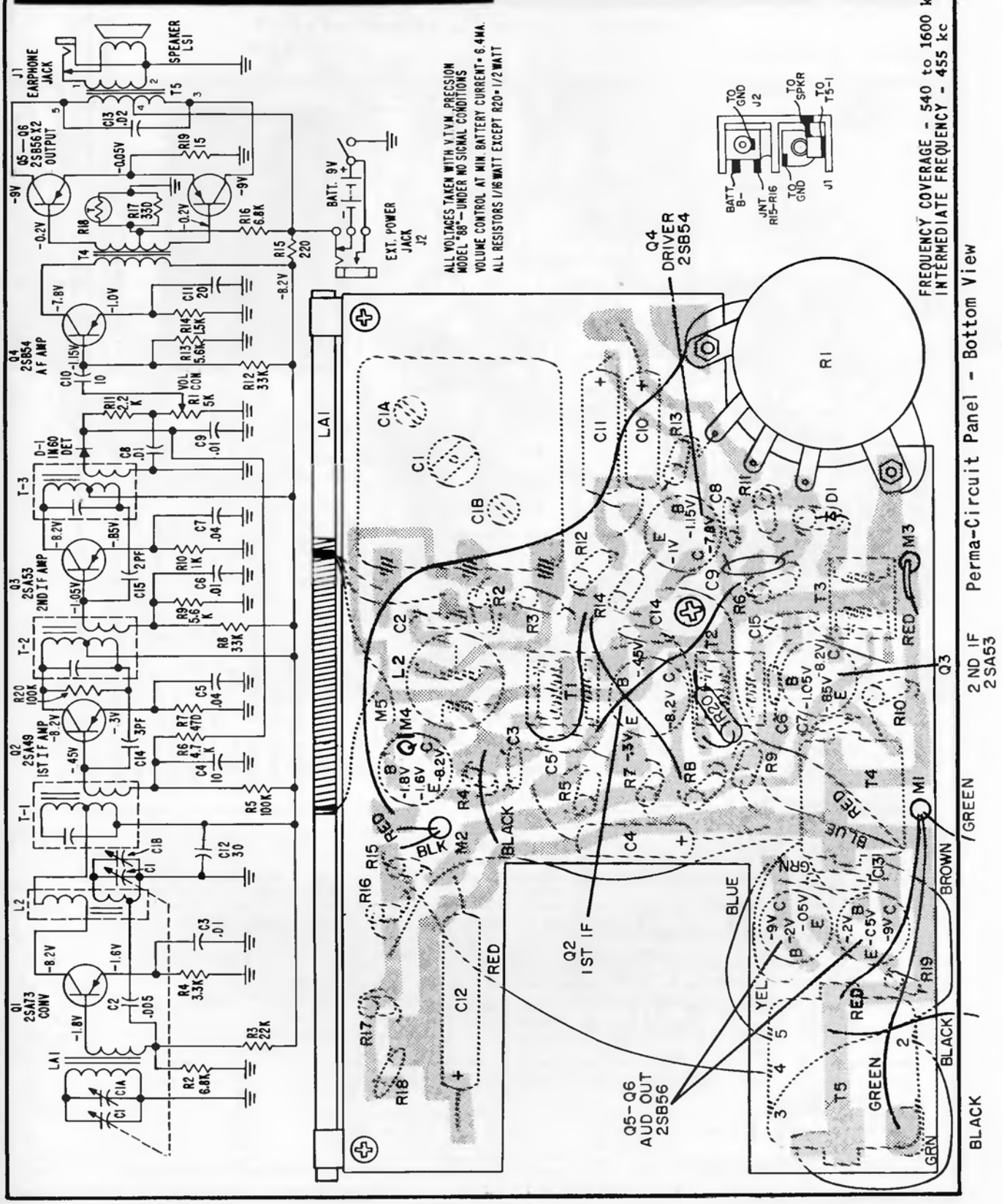

PHILCO

TRANSISTOR PORTABLE
MODEL NT601

(Continued on page 97, adjacent at right)

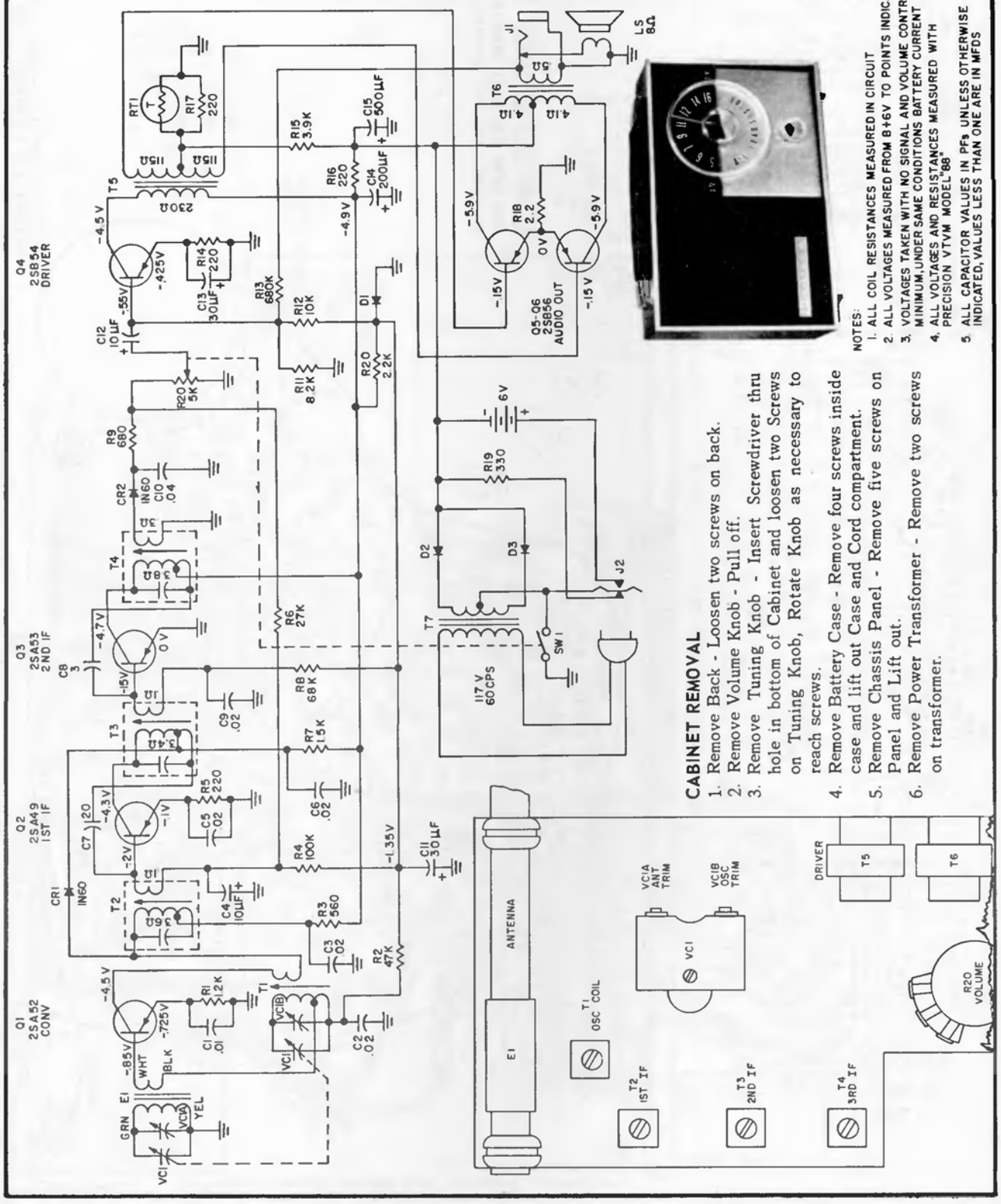

CABINET REMOVAL

1. Remove Back - Loosen two screws on back.
2. Remove Volume Knob - Pull off.
3. Remove Tuning Knob - Insert Screwdriver thru hole in bottom of Cabinet and loosen two Screws on Tuning Knob, Rotate Knob as necessary to reach screws.
4. Remove Battery Case - Remove four screws inside case and lift out Case and Cord compartment.
5. Remove Chassis Panel - Remove five screws on Panel and Lift out.
6. Remove Power Transformer - Remove two screws on transformer.

Chassis Alignment Points

PHILCO

TRANSISTOR PORTABLE MODEL NT601

(Continued)

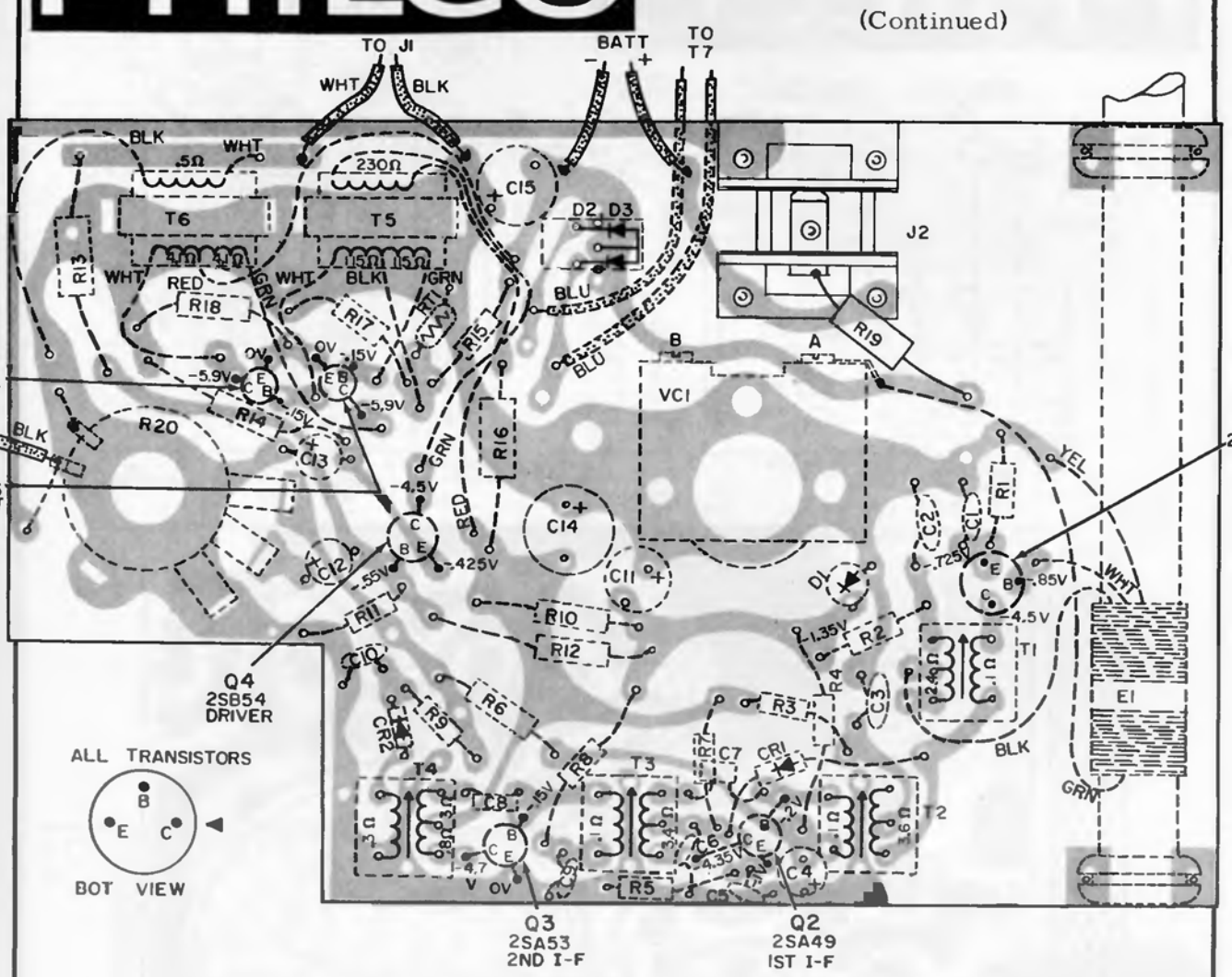

Bottom View - Perma-Circuit Panel, Top View Component Layout - NT601

ALIGNMENT CHART

STEP	CONNECTION TO RADIO	DIAL SETTING	DIAL SETTING	SPECIAL INSTRUCTIONS	ADJUST
1	USE RADIATING LOOP SEE NOTE	455KC	TUNING GANG FULLY OPEN	ADJUST FOR MAX. OUTPUT	T4, T3, T2
2	REPEAT STEP 1 UNTIL NO FURTHER IMPROVEMENT IS OBTAINED				
3	SAME AS STEP 1	525KC	TUNING GANG FULLY CLOSED	ADJUST FOR MAX. OUTPUT	T1 OSC. COIL
4	SAME AS STEP 1	1630KC	TUNING GANG FULLY OPEN	ADJUST FOR MAX. OUTPUT	VC1B OSC. TRIM.
S	REPEAT STEPS 3 AND 4				
6	SAME AS STEP 1	1400KC	1400KC	ADJUST FOR MAX. OUTPUT	VC1A ANT. TRIM.
7	SAME AS STEP 1	600KC	600KC	ADJUST COIL ONLY IF NECESSARY	E1 ANT. COIL

NOTE: FOR RADIATING LOOP, USE A 6 TO 8 TURN, 6 INCH DIAMETER LOOP MADE OF INSULATED WIRE. CONNECT LOOP TO GENERATOR TERMINALS AND PLACE ABOUT 12 INCHES FROM RADIO.

PHILCO

TRANSISTOR PORTABLE MODEL NT-600

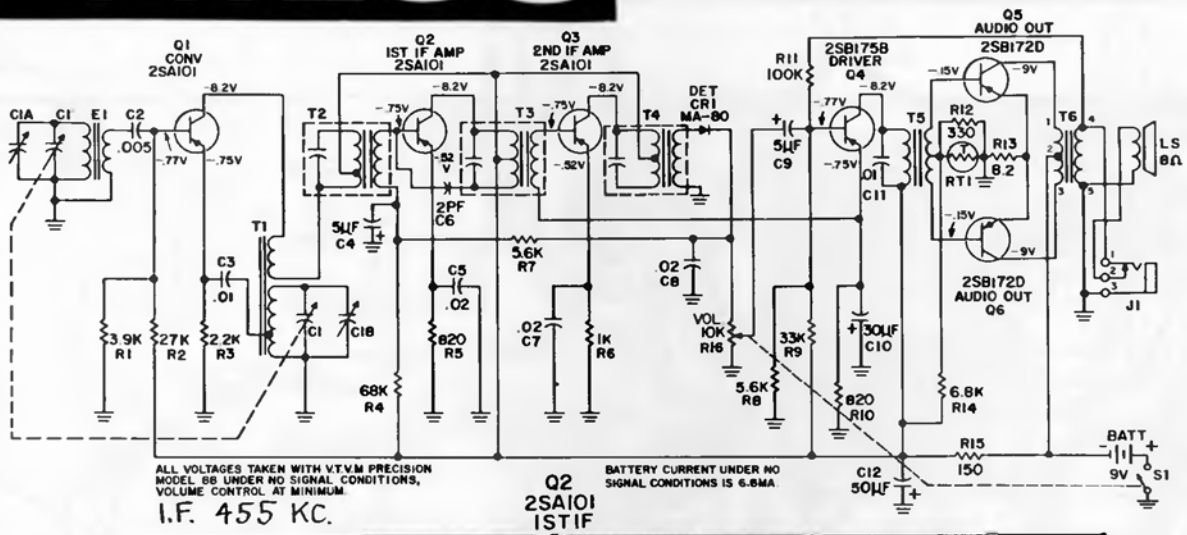

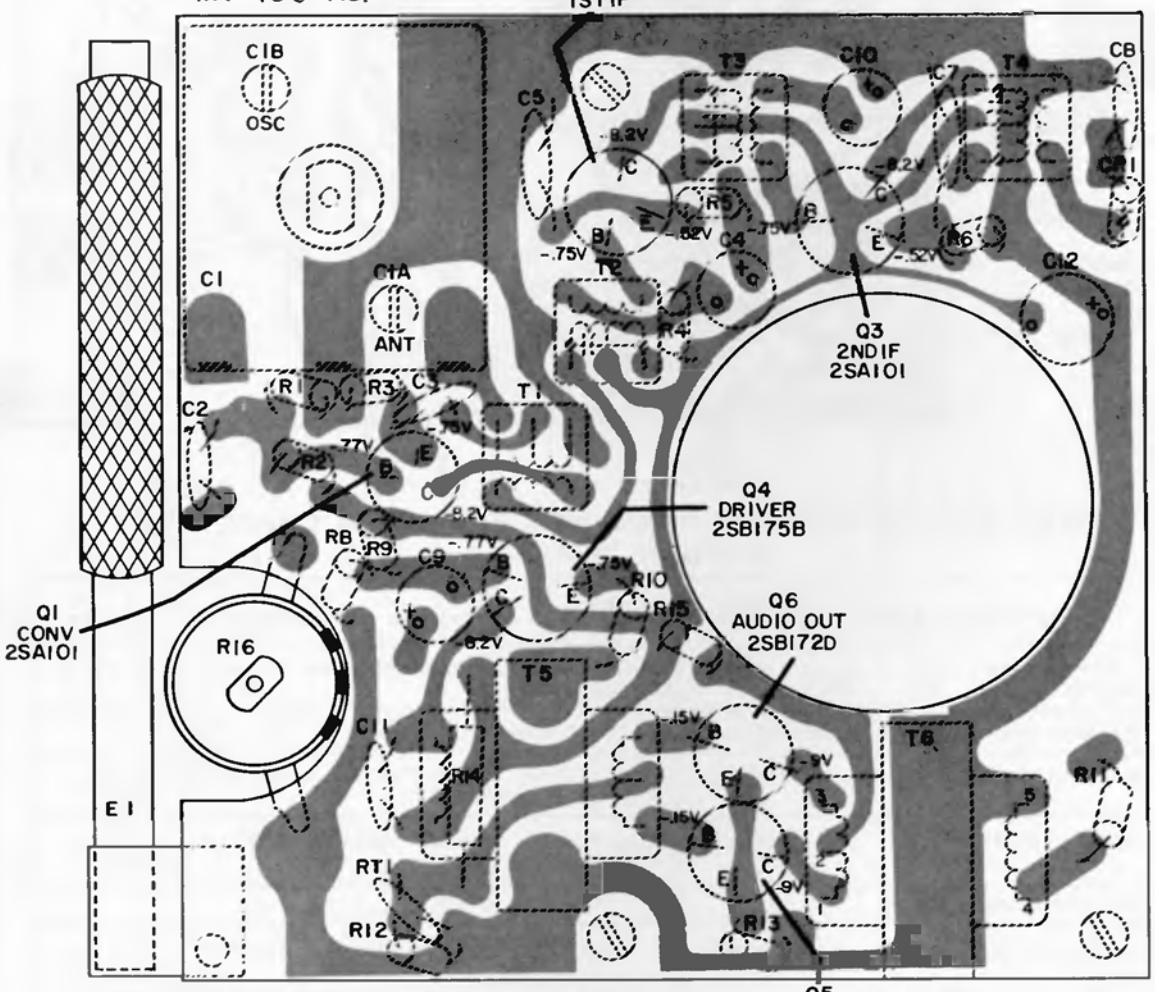

NOTE: WHEN REPLACING BATTERY, NEW BATTERY MAY READ SEVERAL TENTHS OF A VOLT HIGHER THAN ORIGINAL BATTERY. THEREFORE, VOLTAGES MAY READ SLIGHTLY HIGHER THAN THOSE INDICATED ON BASE LAYOUT.

Perma Circuit Panel

Bottom View, Showing Parts on Top

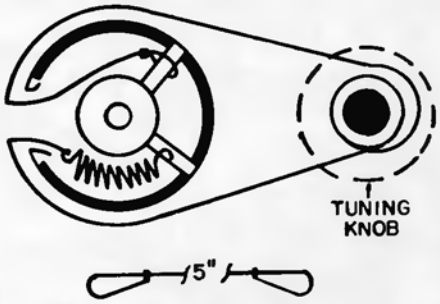

Dial Cord Stringing - Model NT602

PHILCO

MODEL NT602

(Alignment data on page 100)

FREQUENCY COVERAGE: 530KC to 1650KC
INTERMEDIATE FREQUENCY: 455KC
ANTENNA: Self-contained ferrite

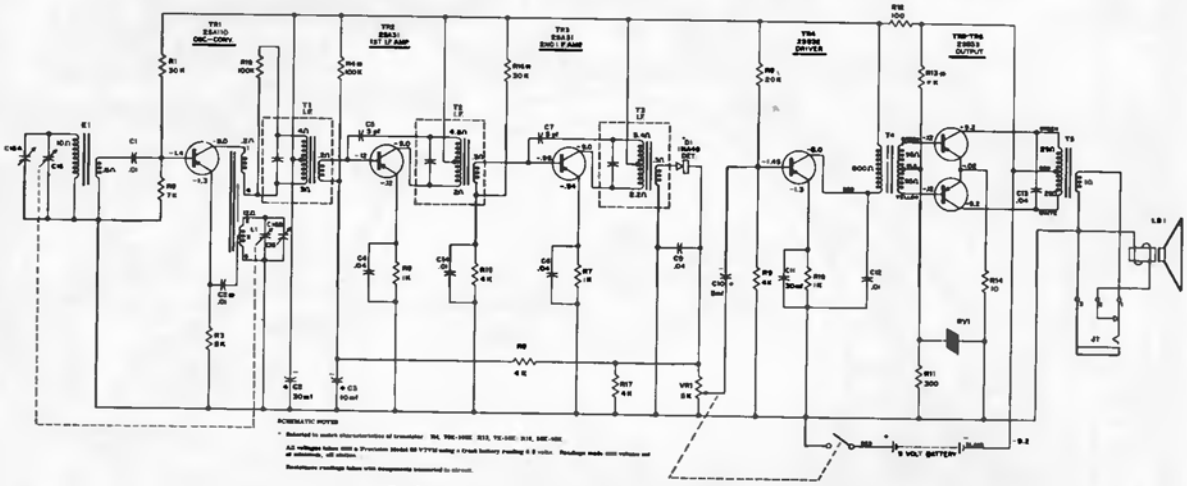

Schematic Diagram - NT602

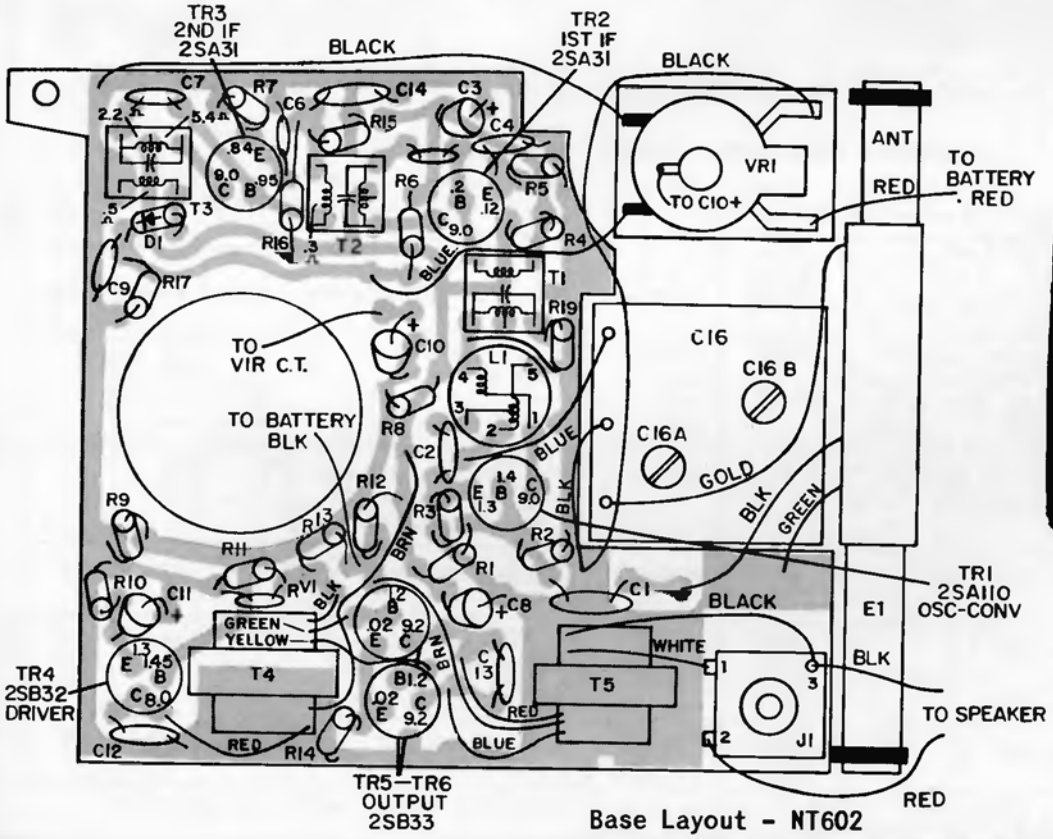

Base Layout - NT602

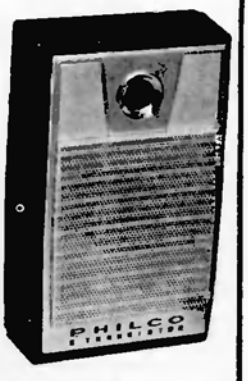

NT602

PHILCO MODELS NT602, NT802, & NT900

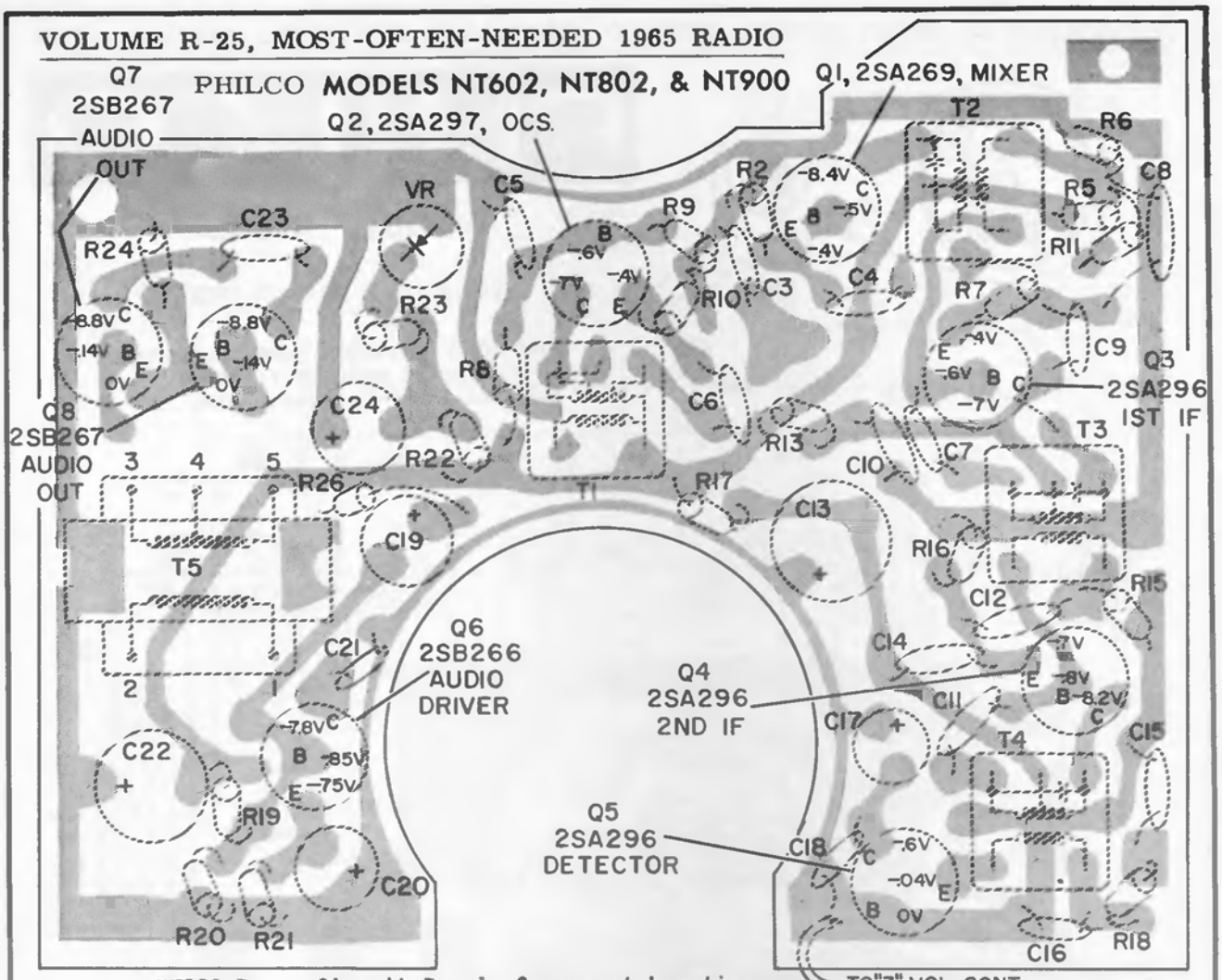

NT802 Perma-Circuit Panel, Component Location

ALIGNMENT PROCEDURE - NT602, NT802 AND NT900

ALIGNMENT: Connect an a-c voltmeter or oscilloscope across speaker voice coil. Connect ground lead of AM R-F generator to chassis; output lead as indicated in chart. Keep voltage across voice coil below .6 volts (reduce generator output).

STEP	CONNECTION TO RADIO	DIAL SETTING	DIAL SETTING	SPECIAL INSTRUCTIONS	NT602	NT802	NT900
1	CONNECT SIGNAL GENERATOR THRU A 0.1 MF CAPACITOR TO RF SECTION OF GANG (C1A)	455KC	TUNING GANG FULLY OPEN	ADJUST FOR MAX. IN ORDER GIVEN	T3 T2 T1	T4 T3 T2	T4 T3 T2
2	USE RADIATING LOOP (SEE NOTE BELOW)	520KC	520KC	ADJUST FOR MAX. ROCK TUNING GANG WHILE MAKING ADJUSTMENTS	L1	T1	T1
3	SAME AS STEP 2	1650KC	1650KC	ADJUST FOR MAX. OUTPUT	C16B	C1B	C1B
4	SAME AS STEP 2	620KC	620KC	SLIDE ANTENNA COIL BACK AND FORTH FOR MAX. OUTPUT	ANT. COIL	ANT. COIL	ANT. COIL
5	SAME AS STEP 2	1400KC	1400KC	ADJUST FOR MAX. OUTPUT	C16A	C1A	C1A

NOTE: USE A 6 TO 8 INCH DIAMETER LOOP MADE UP OF INSULATED WIRE. CONNECT TO GENERATOR TERMINALS, AND LOOSE COUPLE TO RADIO ANTENNA.

PHILCO

MODEL NT802

NT802

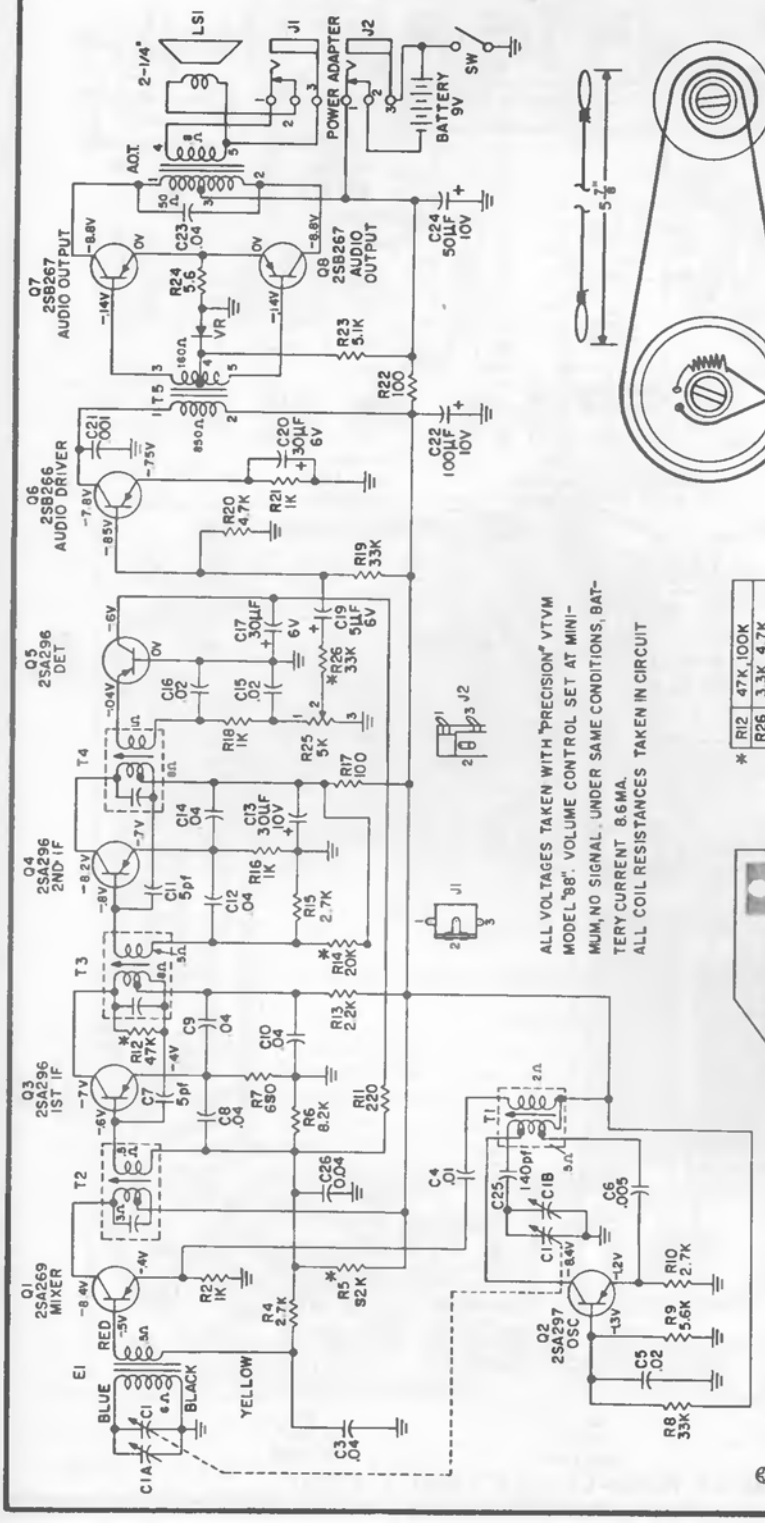

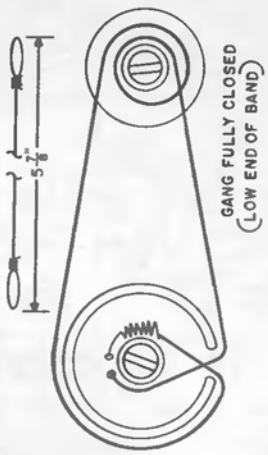

ALL VOLTAGES TAKEN WITH "PRECISION" VTVM MODEL "88". VOLUME CONTROL SET AT MINIMUM, NO SIGNAL. UNDER SAME CONDITIONS, BATTERY CURRENT 8.6 MA.
ALL COIL RESISTANCES TAKEN IN CIRCUIT

* R12	47K, 100K
R26	3.3K, 4.7K
R5	68K, 82K
R14	20K, 18K, 22K

PERMA-CIRCUIT PANEL REMOVAL NT802

Panel Removal - To remove panel from cabinet, remove three Phillips head screws located at A1, C9 and G1 (see bottom component location view). Panel and jack assembly may now be lifted out simultaneously. The speaker will remain in the cabinet. Jack assembly and panel can not be removed separately. They must be removed together. Remove jack assembly by prying up side of jack assembly toward front of radio.

Bottom Component Location

PHILCO Model NT900, Continued (Alignment data on page 100)

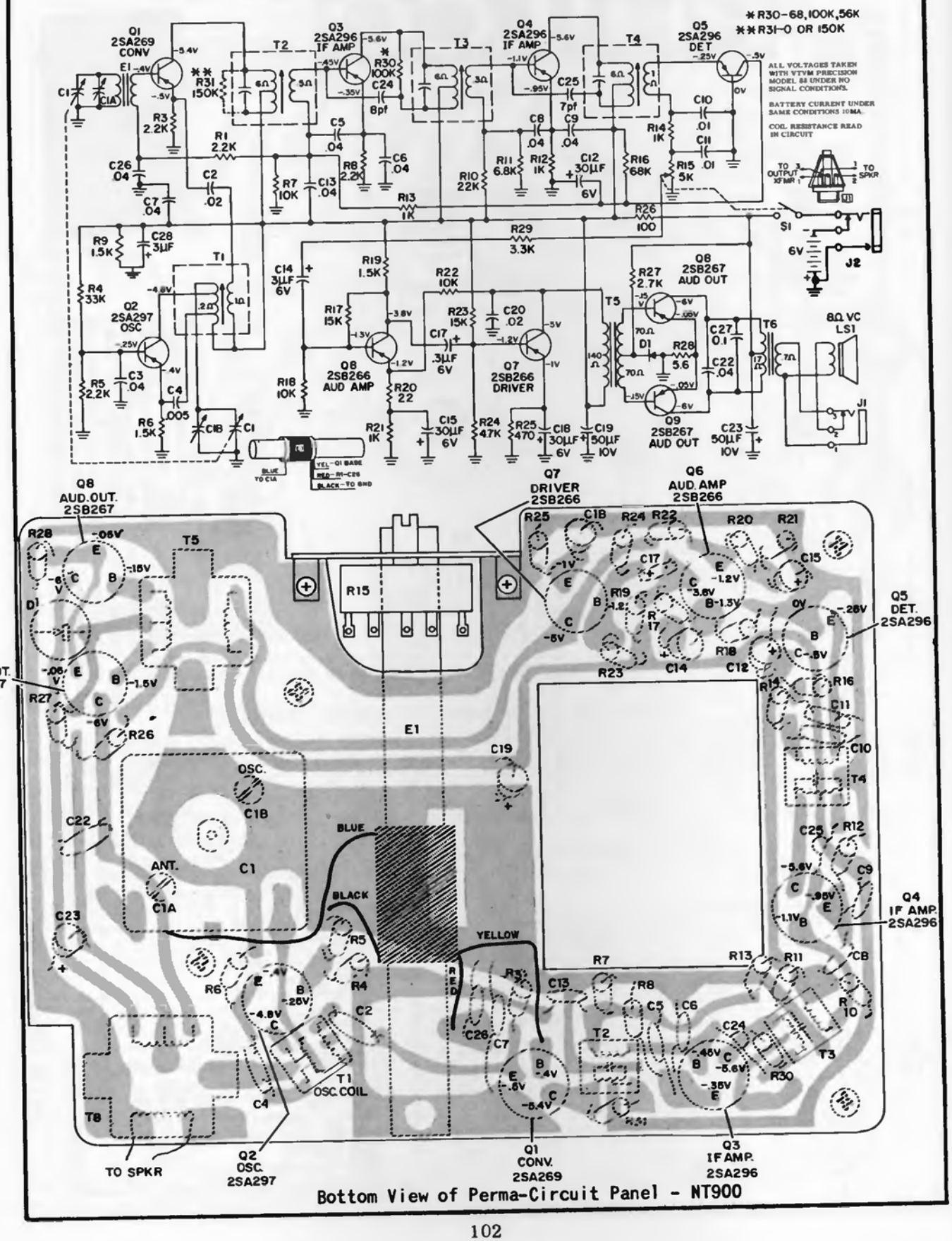

Bottom View of Perma-Circuit Panel - NT900

PHILCO

TABLE/CLOCK AM RADIOS

MODELS N721, N880, & N881

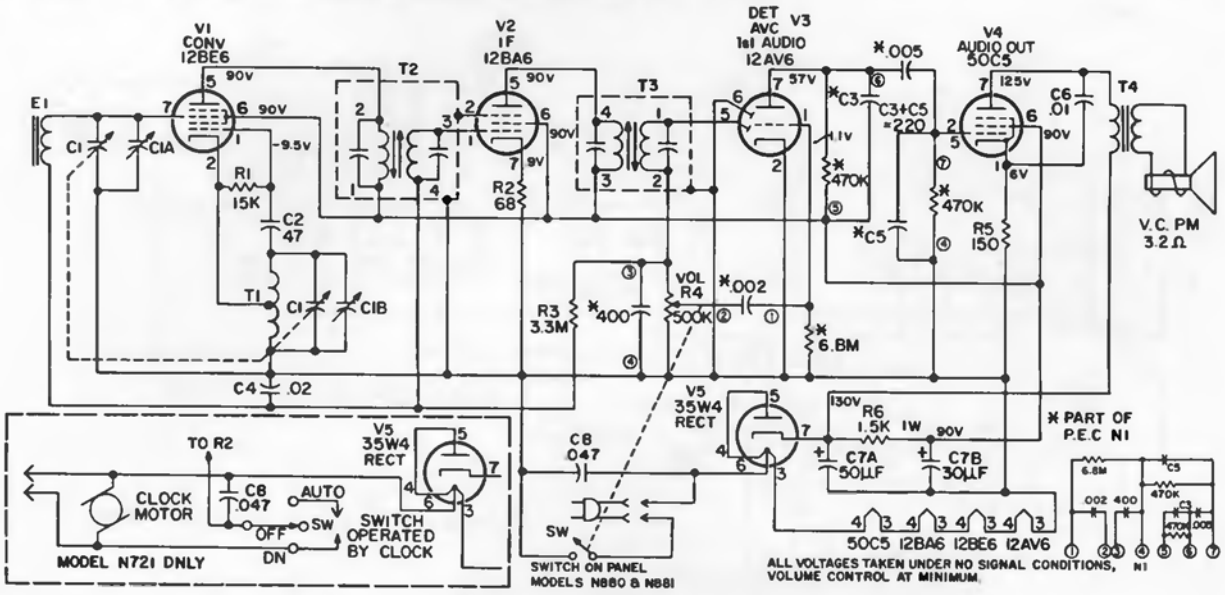

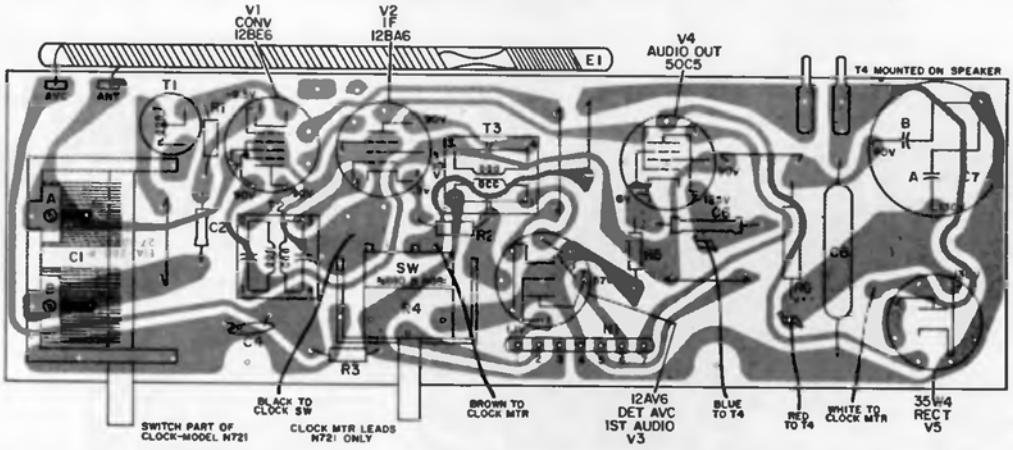

Models N721, N880 & N881 - Component Layout Perma-Circuit Panel, Bottom View

ALIGNMENT PROCEDURE

Allow test equipment to warm up for 15 minutes before proceeding with alignment. Connect AC voltmeter or oscilloscope across speaker voice coil. Use an AM RF signal generator. Connect ground lead to B minus and output lead as indicated in chart. Attenuate signal generator output throughout alignment to maintain output level below 1 volt.

STEP	CONNECTION TO RADIO	DIAL SETTING	DIAL SETTING	SPECIAL INSTRUCTIONS	ADJUST
1	CONNECT GENERATOR THROUGH A .1 MF CAPACITOR TO ANTENNA SECTION OF GANG	455KC	TUNING GANG FULLY OPEN	ADJUST FOR MAXIMUM OUTPUT IN ORDER GIVEN	T3 - TOP T3 - BOTTOM T2 - BOTTOM T2 - TOP
2	USE RADIATING LOOP	1620KC	1620KC	ADJUST FOR MAXIMUM	C1B - OSC. TRIM.
3	SAME AS STEP 2	1400KC	1400KC	ADJUST FOR MAXIMUM	C1A - ANT. TRIM.

NOTE: Use a 6 to 8 turn 6-inch diameter loop made of insulated wire. Connect to signal generator and loosely couple to radio antenna.

PHILCO

MODEL N795

(For alignment see table on page 103)

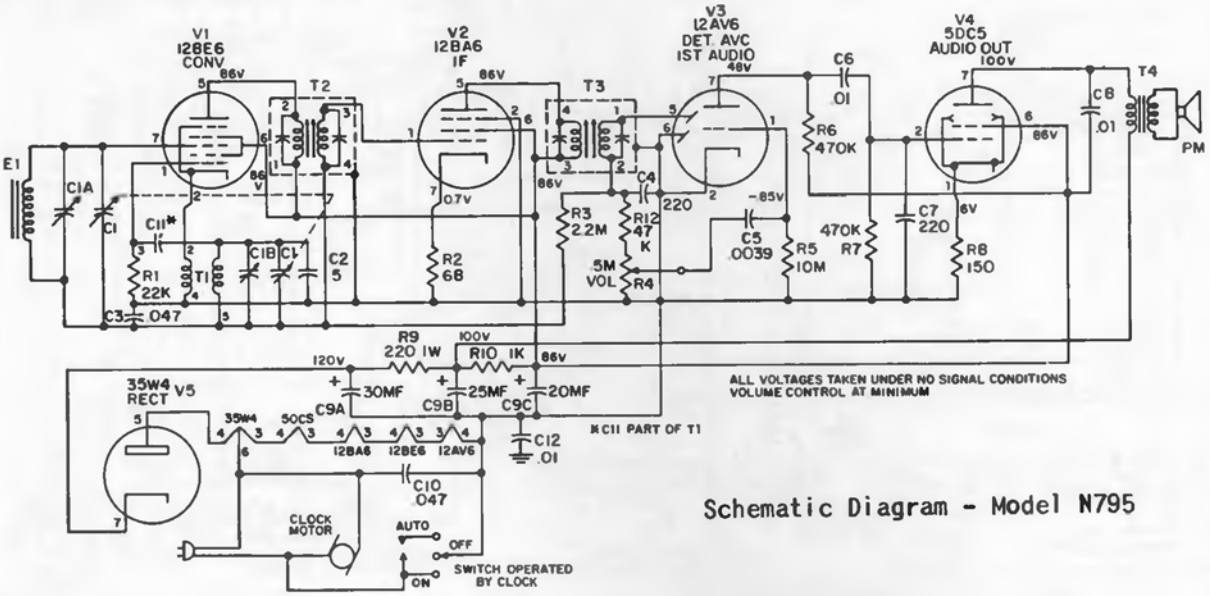

Schematic Diagram - Model N795

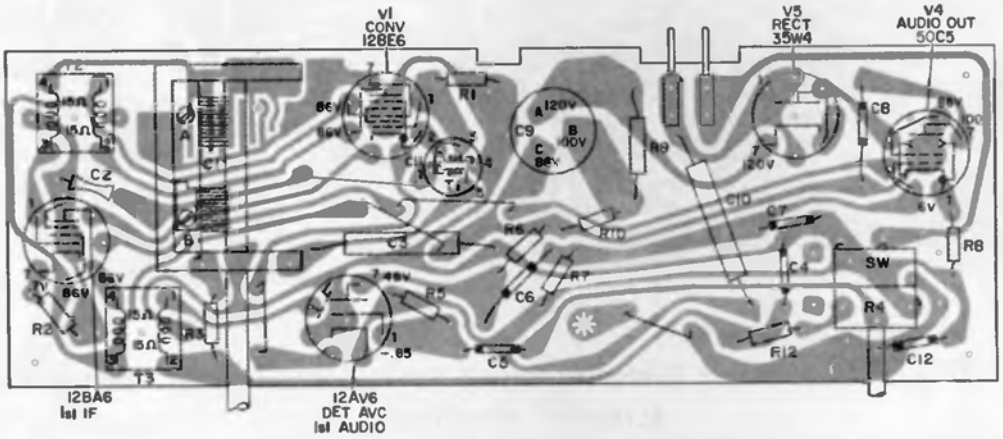

Model N795 - Component Layout Perma-Circuit Panel, Bottom View

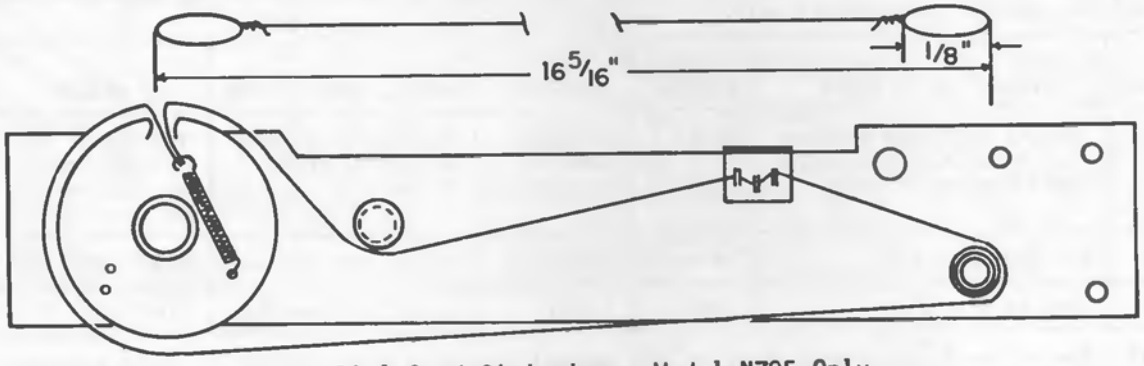

Dial Cord Stringing - Model N795 Only

PHILCO

N-884

AM Only Models N-723, N-724, N-884, N-885

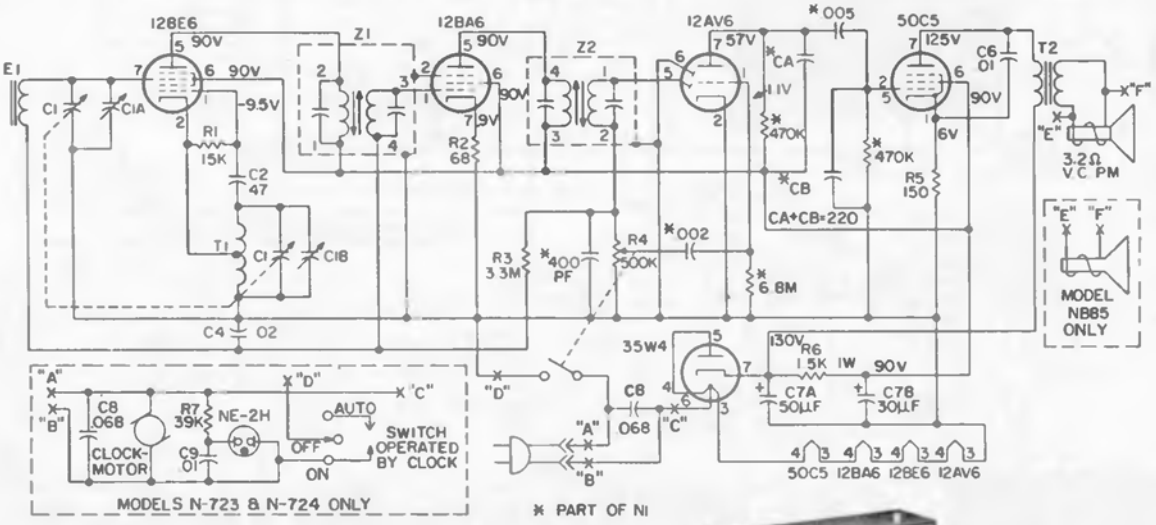

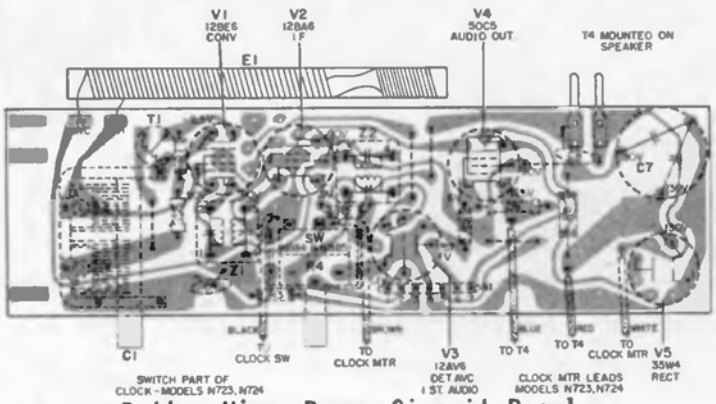

Bottom View Perma-Circuit Panel

N-723

N-885

N-724

ALIGNMENT

Connect an a-c voltmeter or oscilloscope across speaker voice coil. Connect ground lead of the AM R-F signal generator to chassis output lead as indicated in chart. Keep voltage across voice coil below .5 volt (reduce generator output). Set volume control to maximum, tuning control as indicated in chart. During alignment keep antenna and chassis in same relative position as they are in cabinet.

SIGNAL GENERATOR			RADIO		
STEP	CONNECTION TO RADIO	DIAL SETTING	DIAL SETTING	SPECIAL INSTRUCTIONS	ADJUST
1	Ground lead to B-; output lead through a .1 mf condenser to grid (pin 7) of 12BE6 or top of r-f tuning condenser.	455KC	Tuning gang fully open.	Adjust tuning cores, in order given, for maximum output.	Z2 - top Z2 - bottom Z1 - bottom Z1 - top
2	Radiating loop (See note below).	1620KC	1620KC	Adjust for maximum output.	C1-B - osc.
3	Same as Step 2.	1500KC	1500KC	Adjust for maximum output.	C1-A - aerial

NOTE: Make up a 6-8 turn, 6 inch diameter loop from insulated wire, connect to signal-generator leads, and place near radio loop. For proper adjustment of the oscillator trimmer, fully open the tuning gang and insert a .006 inch non-metallic shim between the heel of the rotor and the top of the stator plates. Close the tuning gang sufficiently to hold the shim in place, and then remove the shim without disturbing the gang setting.

PHILCO Models N-725 and N-727

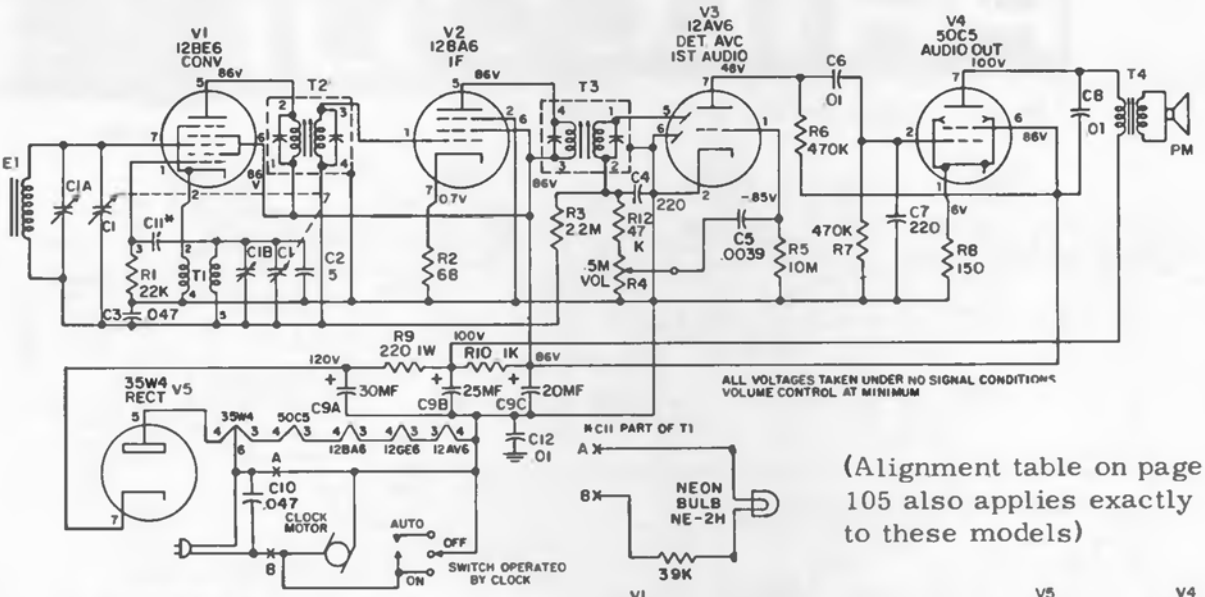

(Alignment table on page 105 also applies exactly to these models)

N-725

N-727

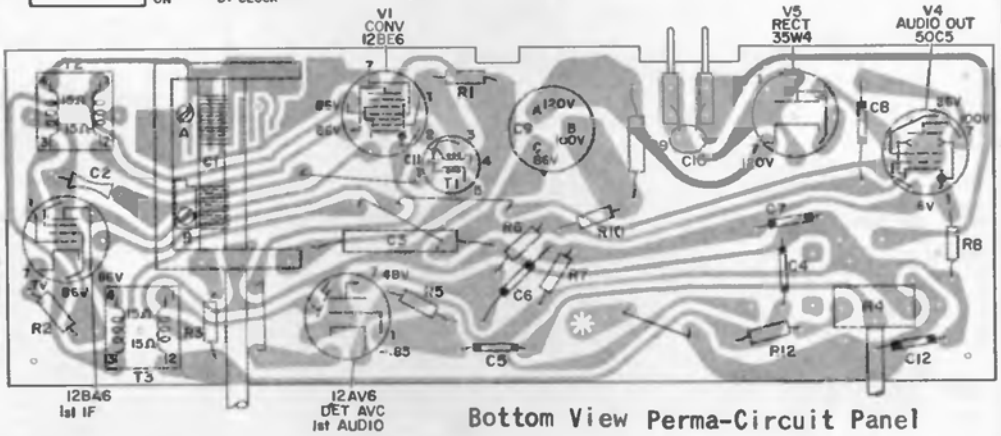

Bottom View Perma-Circuit Panel

SYMBOL	LOCATION	DESCRIPTION	SERVICE PART NO.
C1	C2	Capacitor, variable tuning	
C2	B2	Capacitor, 5 pf, temp. comp.	30-1287-1
C3	E3	Capacitor, .047 mf, AVC	30-4650-45
C4	L4	Capacitor, 220 pf, diode filter	30-1283-25
C5	G5	Capacitor, .0039 mf, 1st audio	30-1283-64
C6	G4	Capacitor, .01 mf, out. grid	30-1283-69
C7	L3	Capacitor, 220 pf, out. grid	30-1283-25
C8	M1	Capacitor, .01 mf, out. plate	30-1283-69
C9	H2	Capacitor, electrolytic 30/25/20	30-2585-11
C10	J2	Capacitor, .047 line bypass	30-4650-45
C11	F2	Part of T1	*
C12	M5	Capacitor, .01 mf, B- to gnd.	30-1283-69

SYMBOL	LOCATION	DESCRIPTION	SERVICE PART NO.
R1	F1	Resistor, 22K ohms, osc. grid	
R2	A4	Resistor, 68 ohms, I-F cathode	
R3	C4	Resistor, 2.2M ohms, AVC	
R4	M4	Control, volume	
R5	F4	Resistor, 10M ohms, 1st audio grid	
R6	G3	Resistor, 470K, 1st audio plate	
R7	H4	Resistor, 470K, 1st output grid	
R8	N3	Resistor, 150 ohms, output cathode	
R9	J2	Resistor, 220 ohms, 1W, B+ filter	
T1	H1	Transformer, oscillator	32-4756-1
Z1	B1	Transformer, 1st I-F	32-4583-23
Z2	B4	Transformer, 2nd I-F	32-4583-23

PHILCO

MODELS N-730, N-940

N-730

N-940

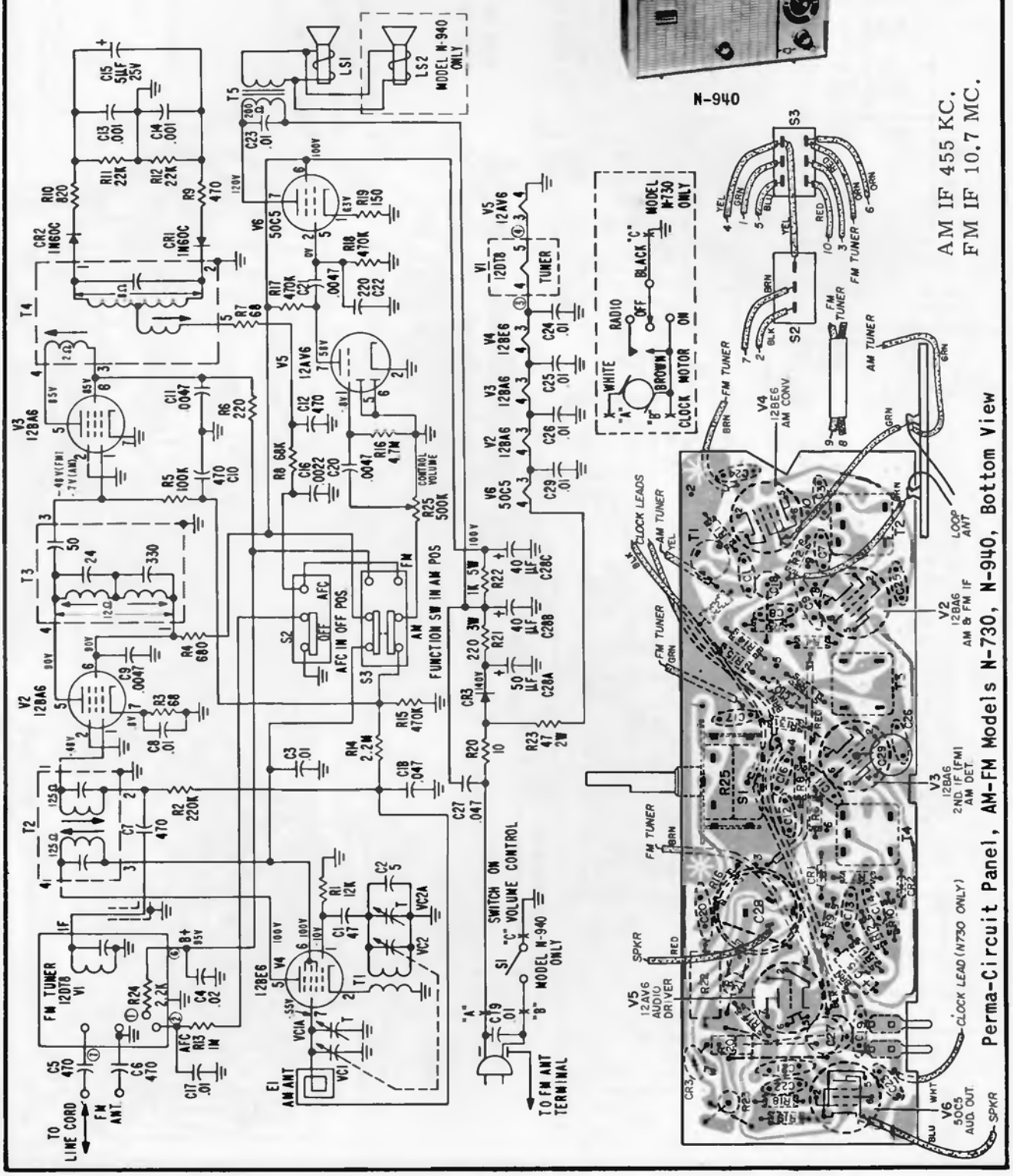

PHILCO

Models N-731, N-732, N-942, N-944

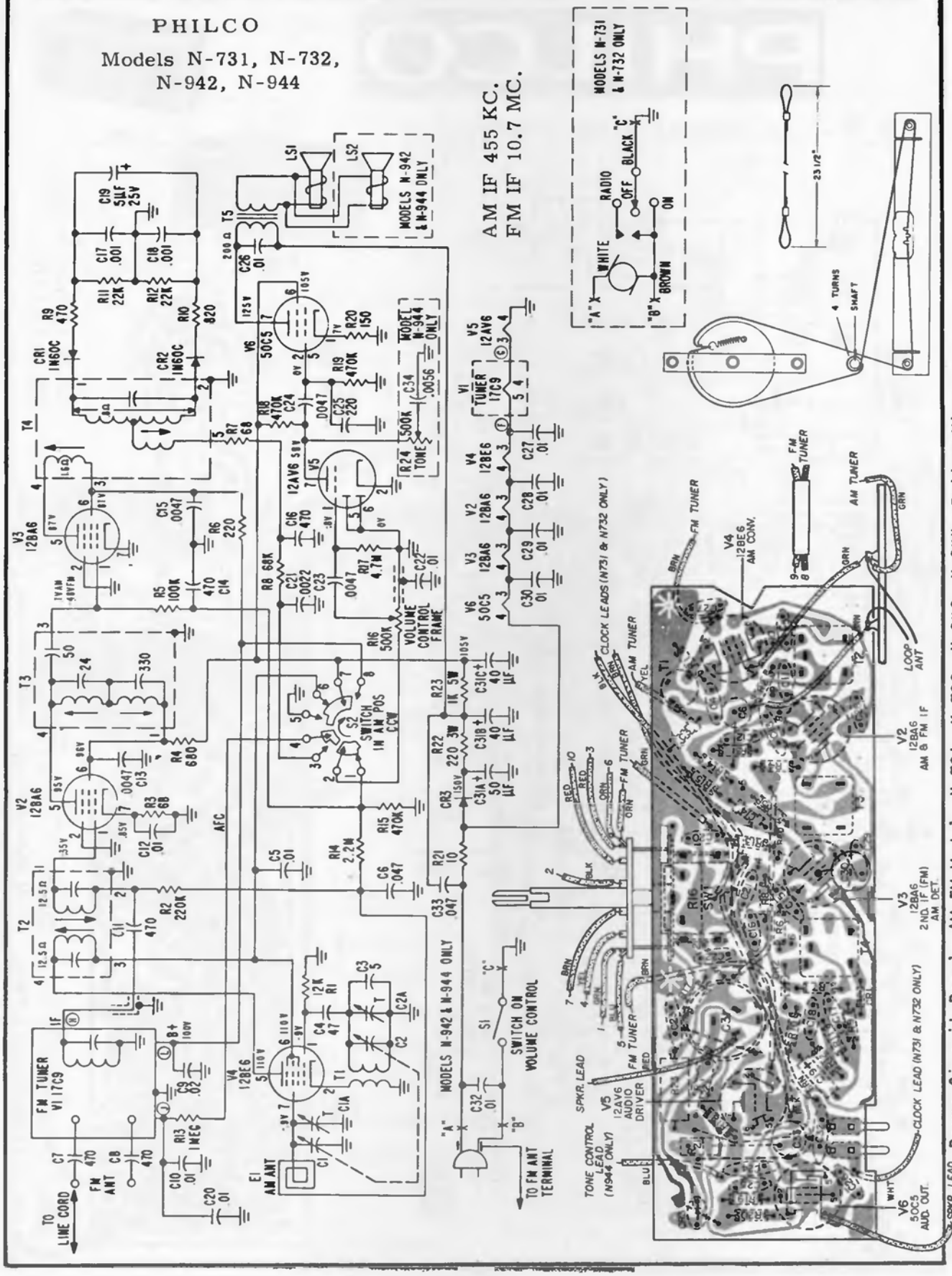

Perma-Circuit Panel, AM-FM Models N-731, N-732, N-942, N-944, Bottom View

PHILCO

TRANSISTOR PORTABLE
MODEL NT-807

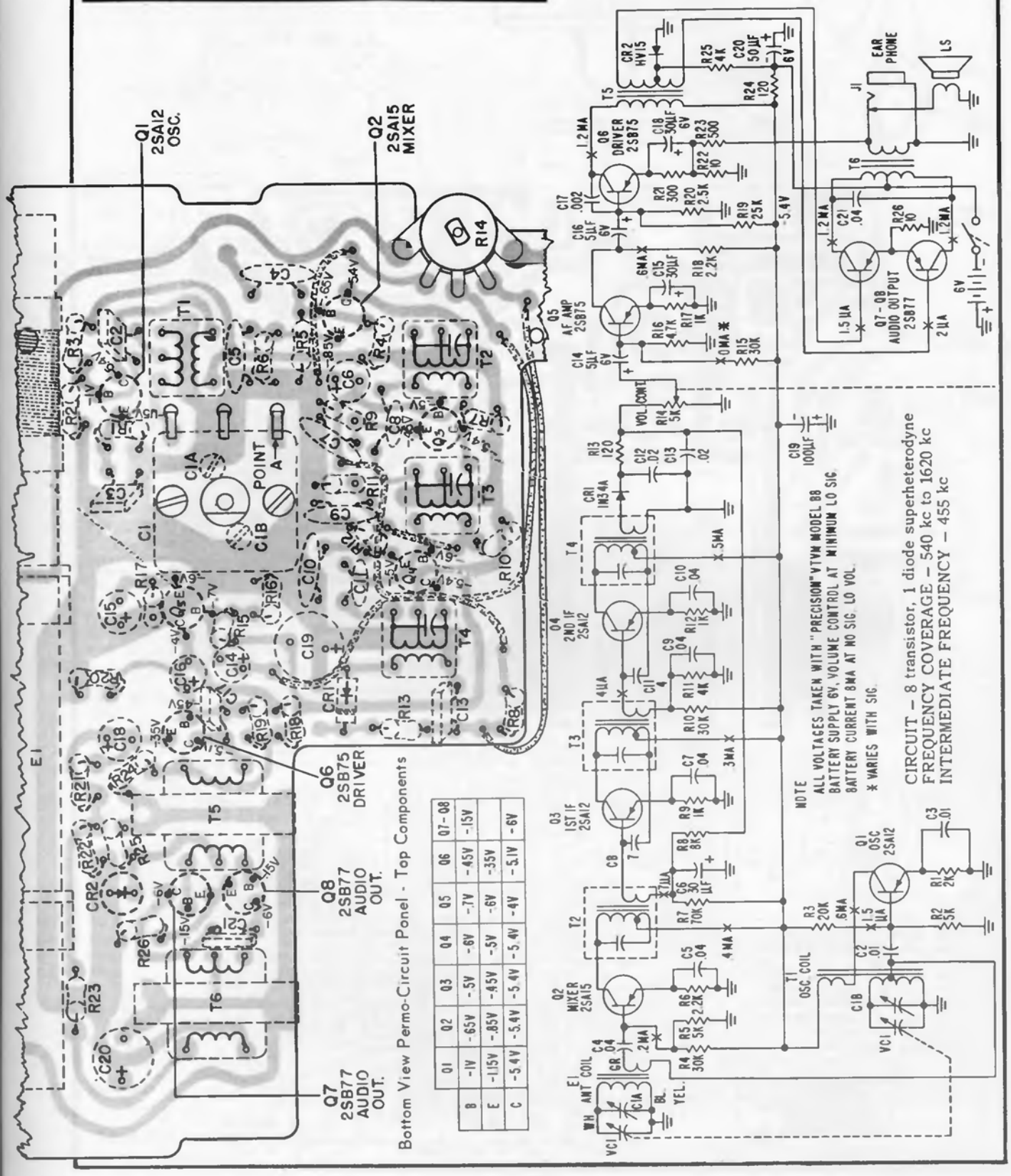

Bottom View Permo-Circuit Panel - Top Components

	Q1	Q2	Q3	Q4	Q5	Q6	Q7-Q8
B	-1V	-.65V	-.5V	-.6V	-.7V	-.45V	-.15V
E	-1.15V	-.85V	-.45V	-.5V	-.6V	-.35V	
C	-5.4V	-5.4V	-5.4V	-5.4V	-4V	-5.1V	-6V

PHILCO
MODEL NT-808

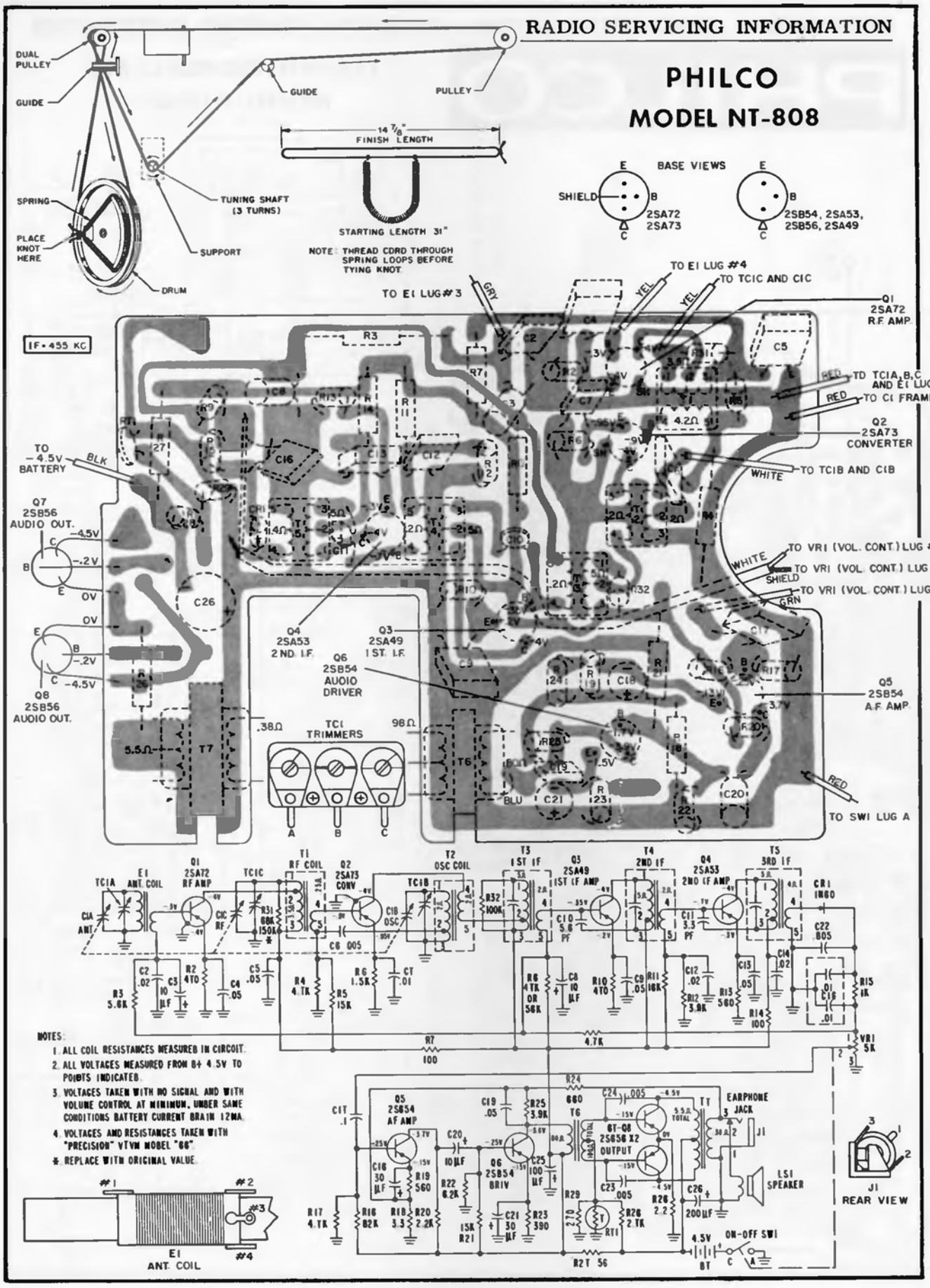

PHILCO

AM-FM TRANSISTOR PORTABLE
MODEL NT-906

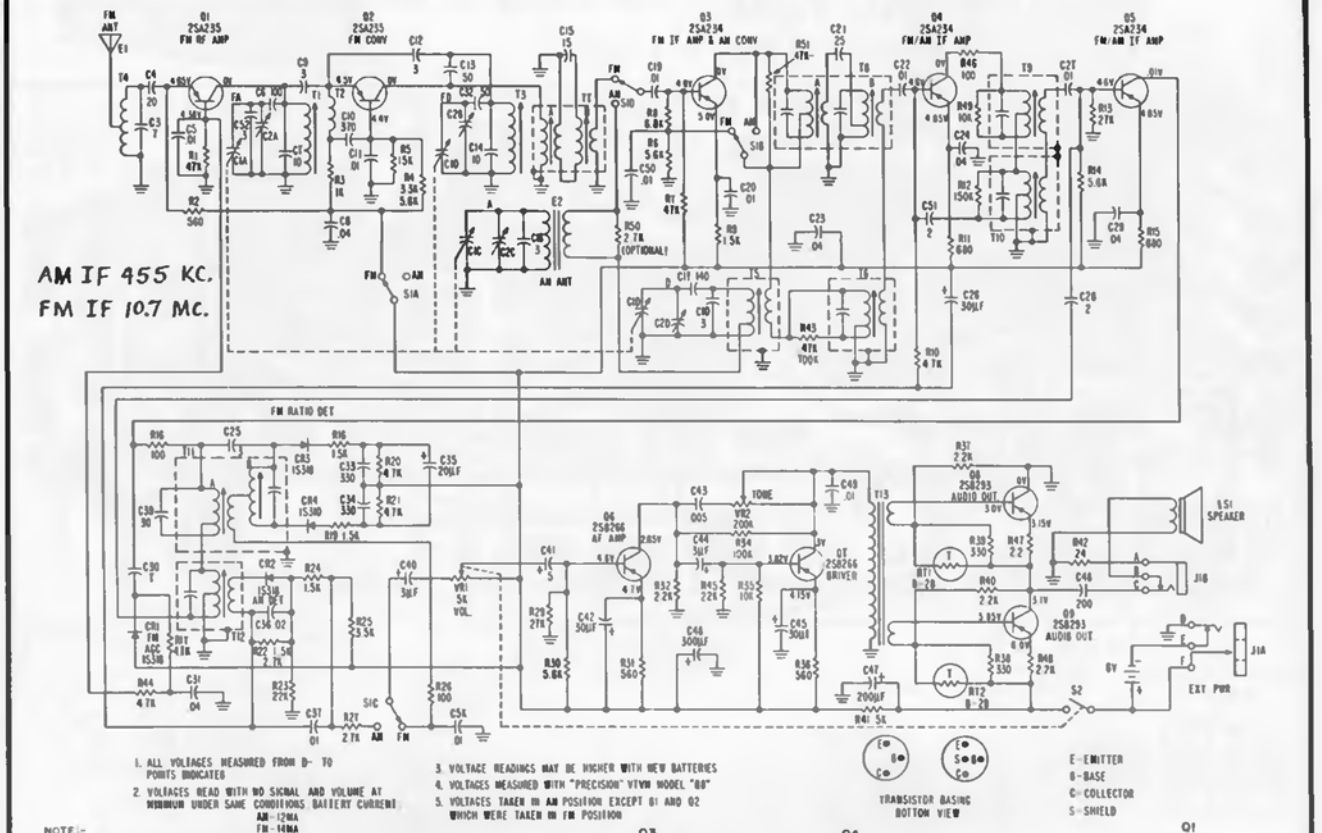

1. ALL VOLTAGES MEASURED FROM B- TO POINTS INDICATED
2. VOLTAGES READ WITH NO SIGNAL AND VOLUME AT MINIMUM UNDER SAME CONDITIONS. BATTERY CURRENT: AM-12MA FM-14MA
3. VOLTAGE READINGS MAY BE HIGHER WITH NEW BATTERIES
4. VOLTAGES MEASURED WITH "PRECISION" VTVM MODEL "88"
5. VOLTAGES TAKEN IN AM POSITION EXCEPT Q1 AND Q2 WHICH WERE TAKEN IN FM POSITION

E-EMITTER
B-BASE
C-COLLECTOR
S-SHIELD

NOTE:-
1. ALL RESISTANCE READINGS MEASURED IN-CIRCUIT.
2. ALL VOLTAGES AND RESISTANCES WERE MEASURED WITH "PRECISION" VTVM MODEL "88".

VOLTAGE CHART

	C	B	E
Q1	0 0	3.22 ▯4.38	1.68 ▯4.65
Q2	0 0	1.25 ▯4.4	1.5 ▯4.5
Q3	0 0	4.6 ▯2.8	5.0 ▯3.2
Q4	0 0	4.6 ▯4.45	4.85 ▯4.7
Q5	.05 ▯.05	4.6 ▯4.6	4.85 ▯4.88
Q6	2.65 ▯2.52	4.6 ▯4.4	4.7 ▯4.55
Q7	3 ▯3	3.82 ▯3.82	4.15 ▯4.0
Q8	0 0	3.0 ▯3.0	3.15 ▯3.15
Q9	3.1 ▯3.1	5.85 ▯5.85	6.0 ▯6.0

VOLTAGES MARKED WITH ▯ READ WITH SWITCH IN FM POSITION, ALL OTHERS IN AM. BATTERY CURRENT MEASURED WITH VOLUME AND TONE CONTROL AT MINIMUM AND NO SIGNAL ON FM 14MA., AM 12MA.

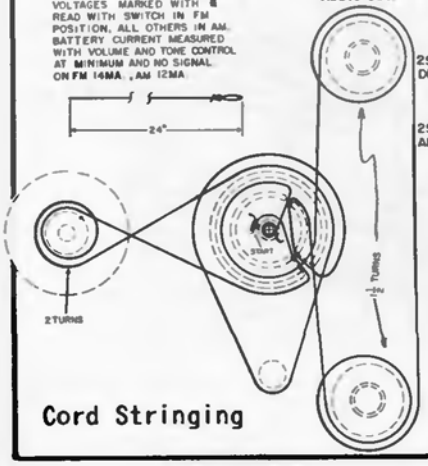

Cord Stringing

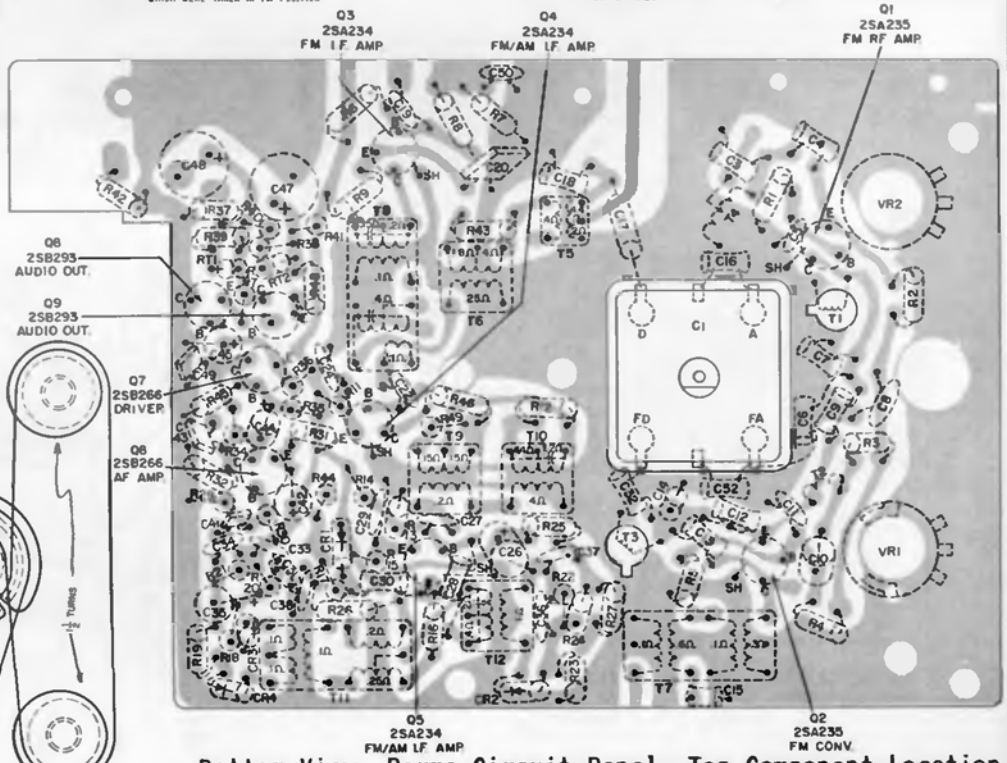

Bottom View, Perma-Circuit Panel, Top Component Location

PHILCO

AM-FM TRANSISTOR PORTABLE
MODEL NT-906

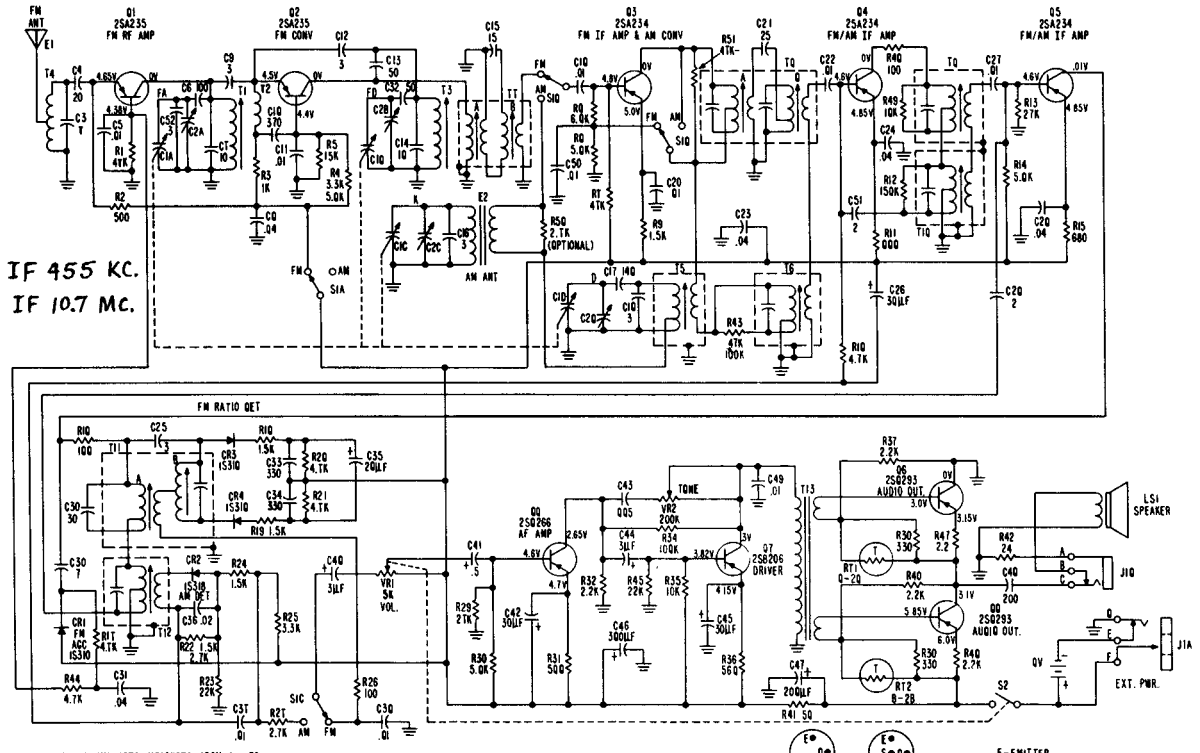

1. ALL VOLTAGES MEASURED FROM 0- TO POINTS INDICATED
2. VOLTAGES READ WITH NO SIGNAL AND VOLUME AT MINIMUM UNDER SAME CONDITIONS. BATTERY CURRENT: AM-12MA FM-14MA
3. VOLTAGE READINGS MAY BE HIGHER WITH NEW BATTERIES
4. VOLTAGES MEASURED WITH "PRECISION" VTVM MODEL "88"
5. VOLTAGES TAKEN IN AM POSITION EXCEPT Q1 AND Q2 WHICH WERE TAKEN IN FM POSITION

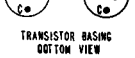

TRANSISTOR BASING BOTTOM VIEW

E-EMITTER
B-BASE
C-COLLECTOR
S-SHIELD

NOTE:-
1. ALL RESISTANCE READINGS MEASURED IN-CIRCUIT.
2. ALL VOLTAGES AND RESISTANCES WERE MEASURED WITH "PRECISION" VTVM MODEL "88".

VOLTAGE CHART

	C	B	E
Q1	0 0	3.22 *4.38	1.68 *4.65
Q2	0 0	1.25 *4.4	1.5 *4.5
Q3	0 0	4.8 *2.8	5.0 *3.2
Q4	0 0	4.6 *4.45	4.85 *4.7
Q5	.05 *.05	4.6 *4.6	4.85 *4.68
Q6	2.65 *2.52	4.6 *4.4	4.7 *4.55
Q7	.3 *.3	3.82 *3.82	4.15 *4.0
Q8	0 0	3.0 *3.0	3.15 *3.15
Q9	3.1 *3.1	5.85 *5.85	6.0 *6.0

VOLTAGES MARKED WITH * READ WITH SWITCH IN FM POSITION, ALL OTHERS IN AM. BATTERY CURRENT MEASURED WITH VOLUME AND TONE CONTROL AT MINIMUM AND NO SIGNAL. ON FM 14MA., AM 12MA.

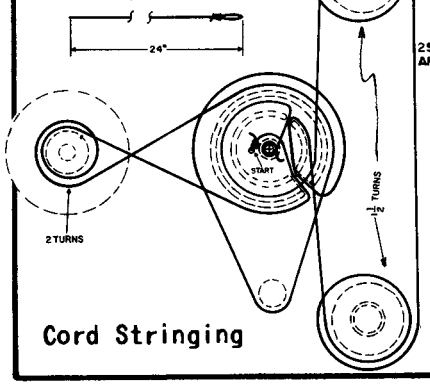

Cord Stringing

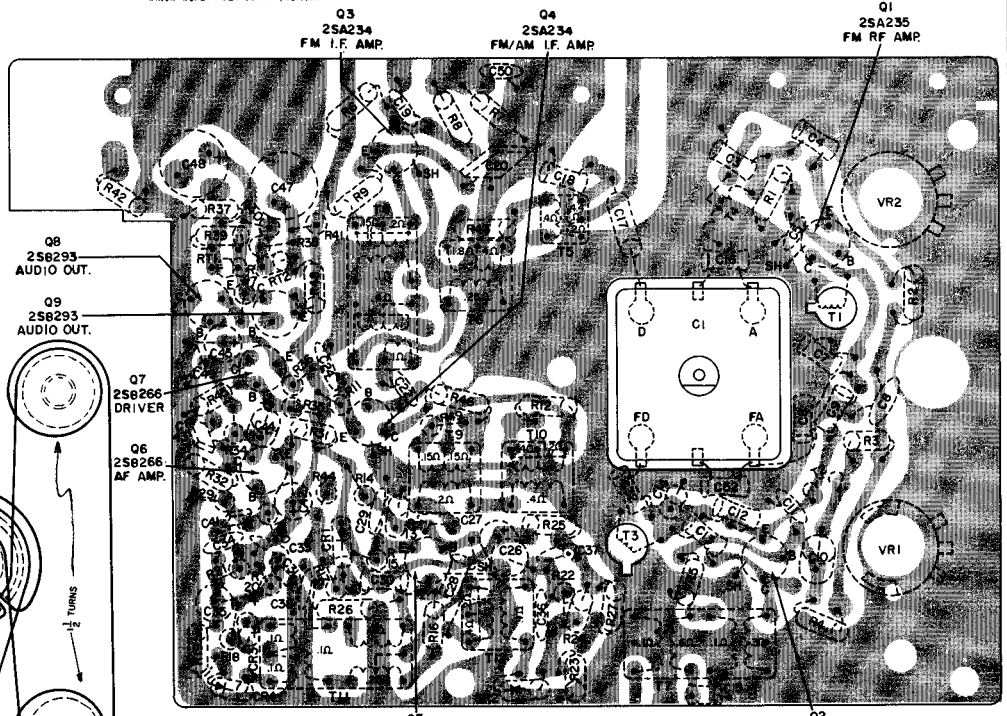

Bottom View, Perma-Circuit Panel, Top Component Location

PHILCO

MODEL T-908

(Continued on the next page at right)

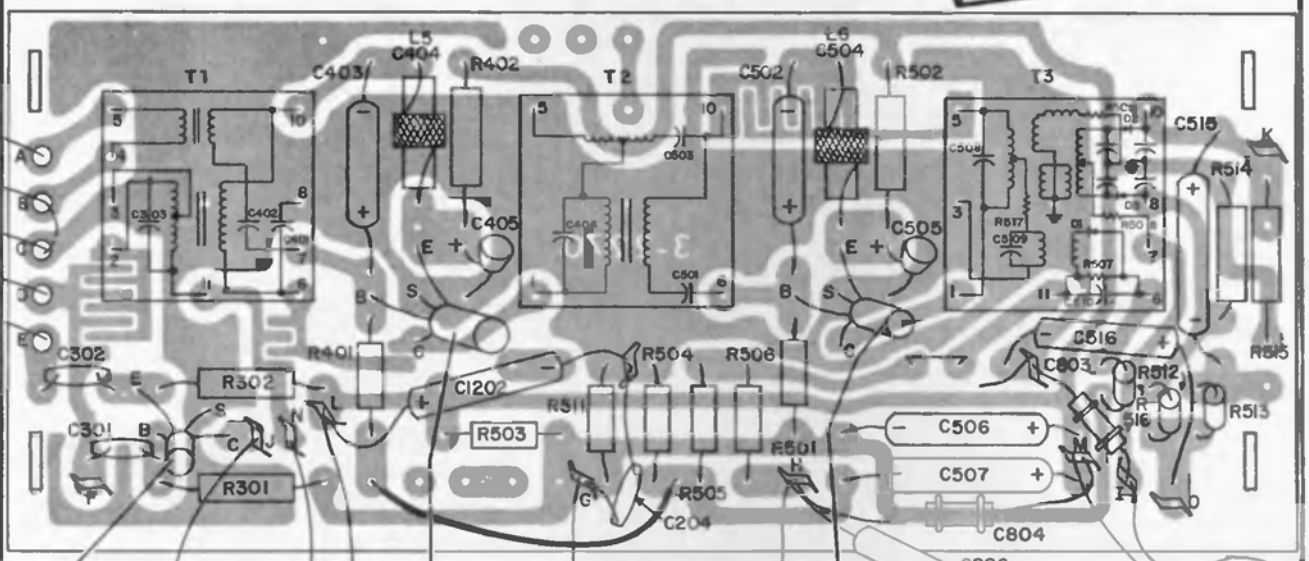

	AM	FM
E	7V	6.8V
B	6.8V	6.6V
C	.3V	0V

	AM	FM
E	6.8V	6.6V
B	6.4V	6V
C	0V	0V

	AM	FM
E	6.8V	6.6V
B	6.4V	6.2V
C	.36V	.36V

Top View, IF Panel

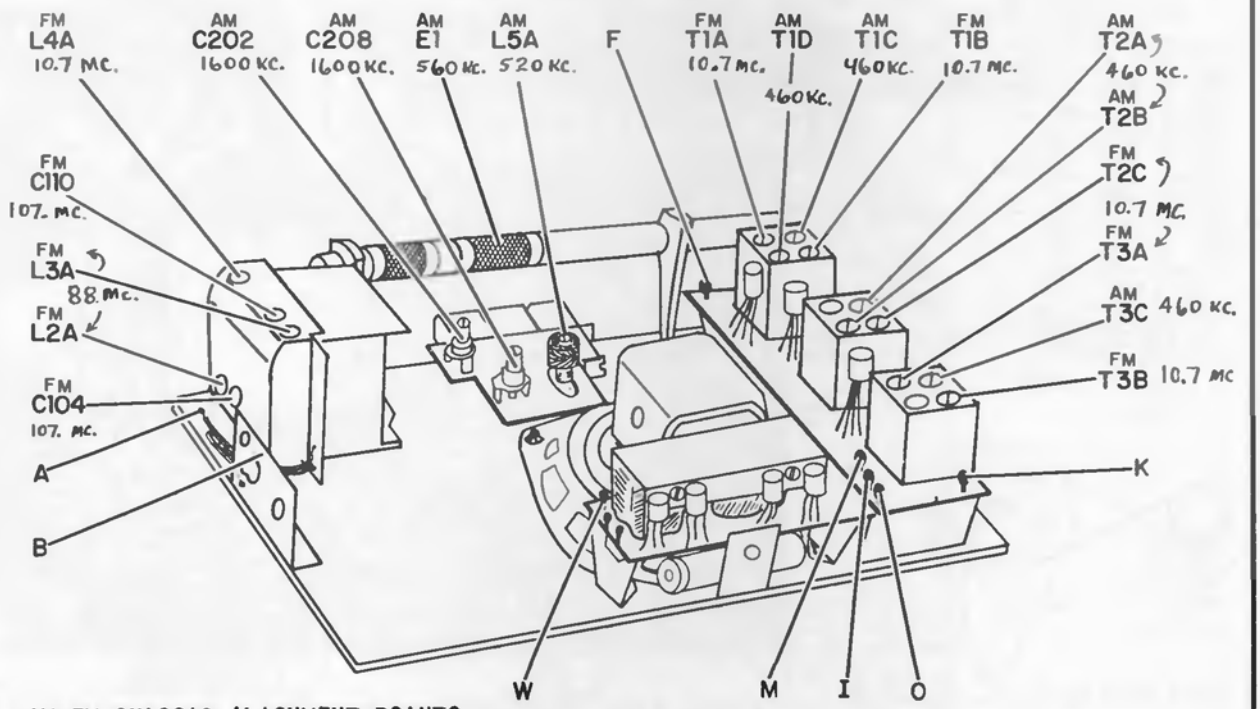

AM-FM CHASSIS ALIGNMENT POINTS

PHILCO

MODEL T-908

(Continued from the page at left)

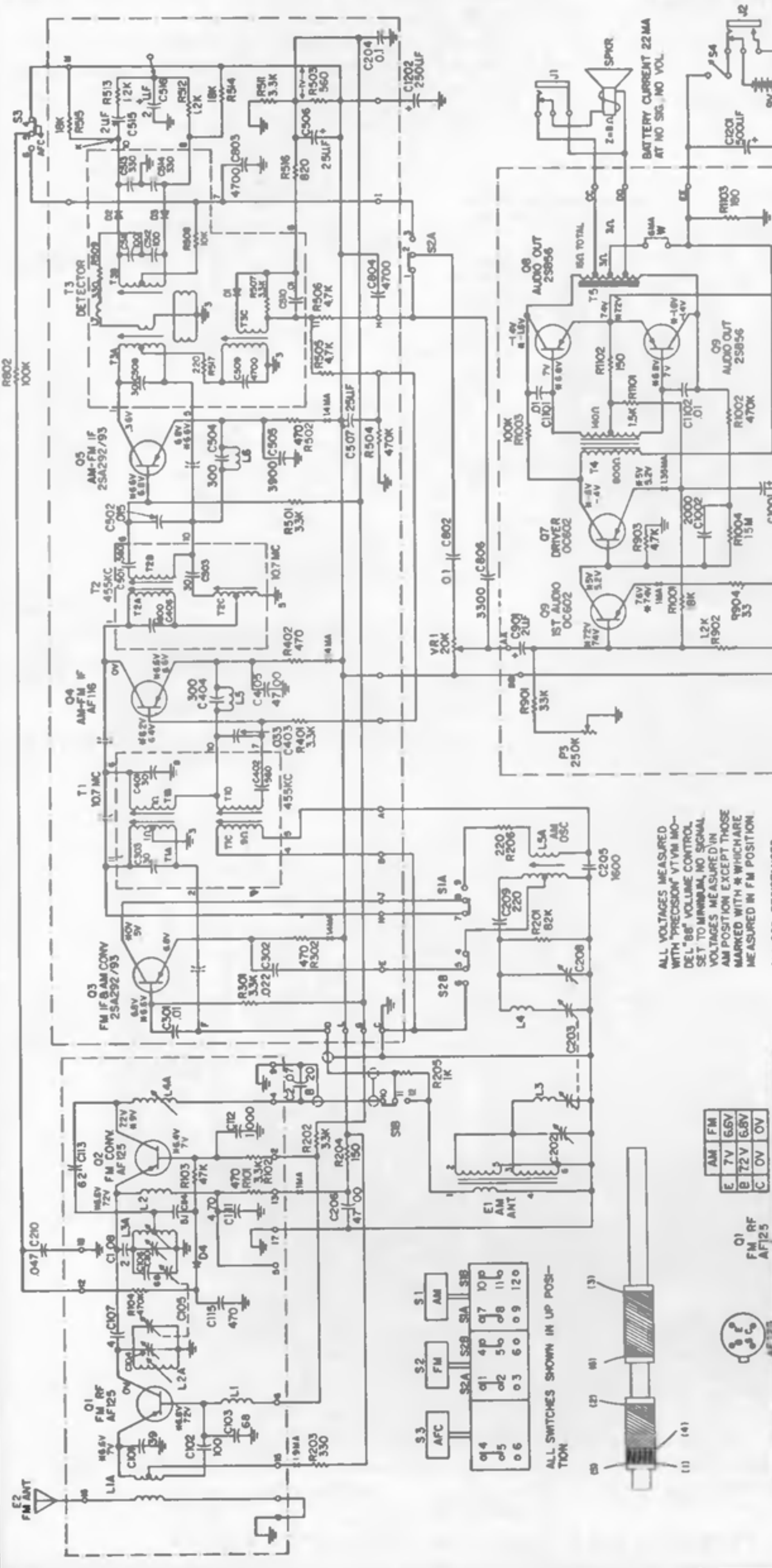

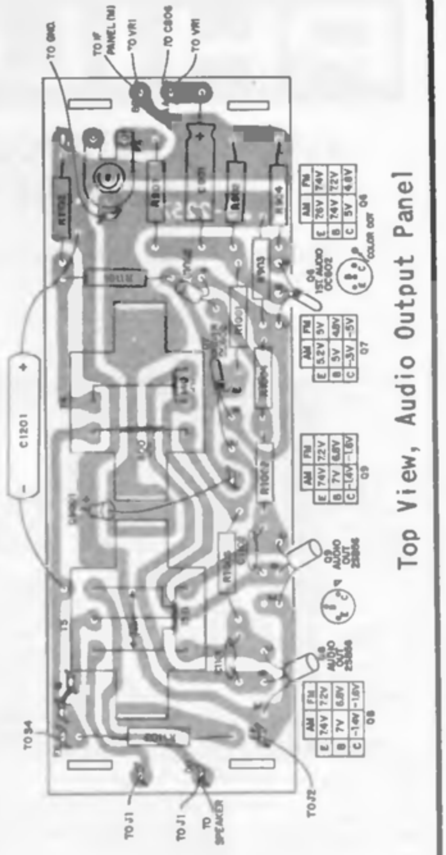

Top View, Audio Output Panel

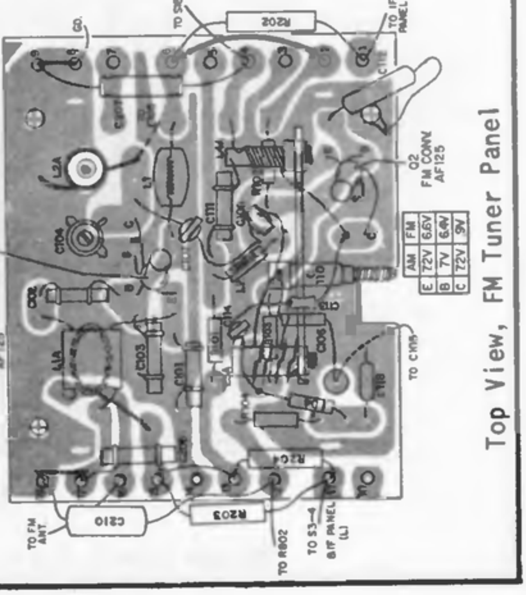

Top View, FM Tuner Panel

PHILCO

AM-FM TRANSISTOR PORTABLE MODEL NT-913

(Continued on the next page at right)

CABINET REMOVAL FOR SERVICING

1. Remove two screws from bottom of cabinet.
2. Loosen two screws located under handle (turn CCW five turns maximum). Do not remove screws.
3. Lay radio on its back; lift front frame with chassis from cabinet.
4. Remove nut holding power jack in cabinet.
5. FM antenna lead and battery leads must be unsoldered to detach cabinet completely.

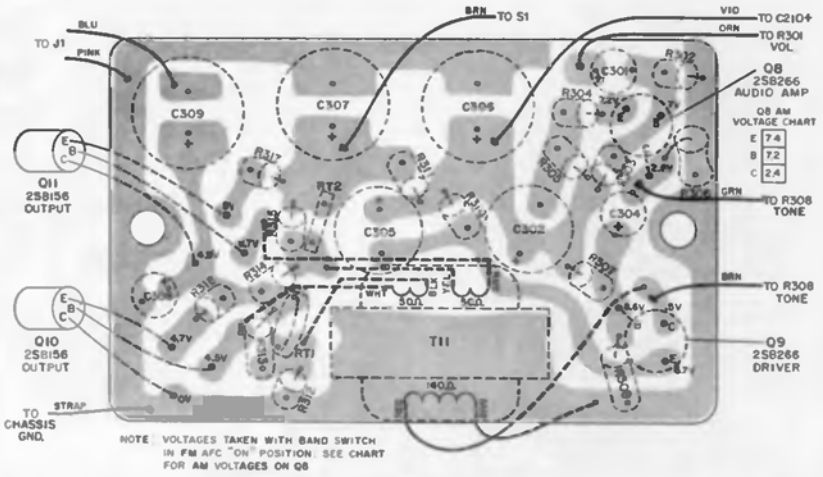

Bottom View - Audio Perma-Circuit Panel Top Components Layout

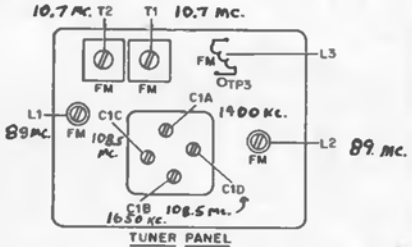

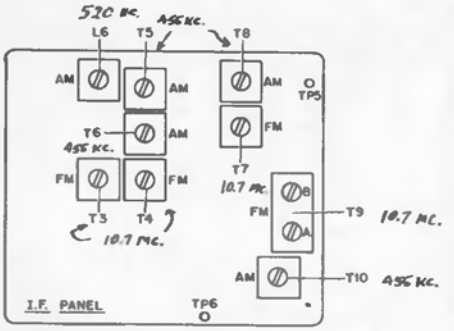

FM Alignment Curve and Alignment Points

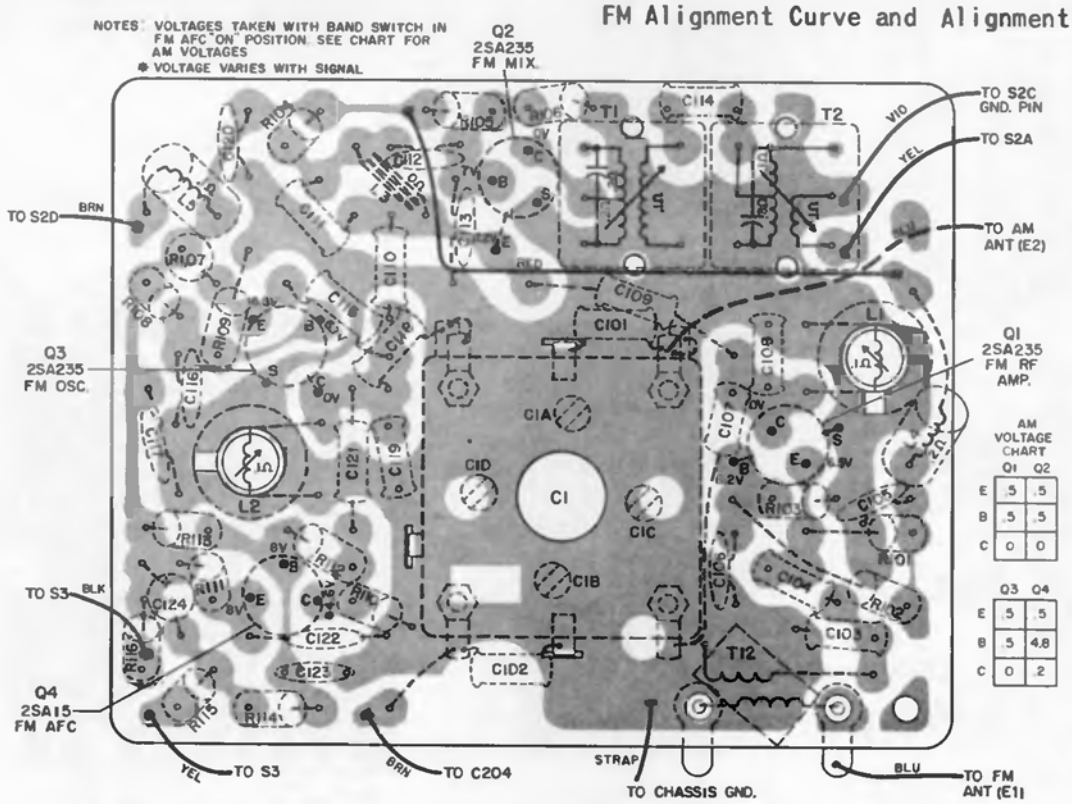

Bottom View - Tuner Perma-Circuit Panel Top Components Layout

PHILCO Model NT-913, Continued from page at left

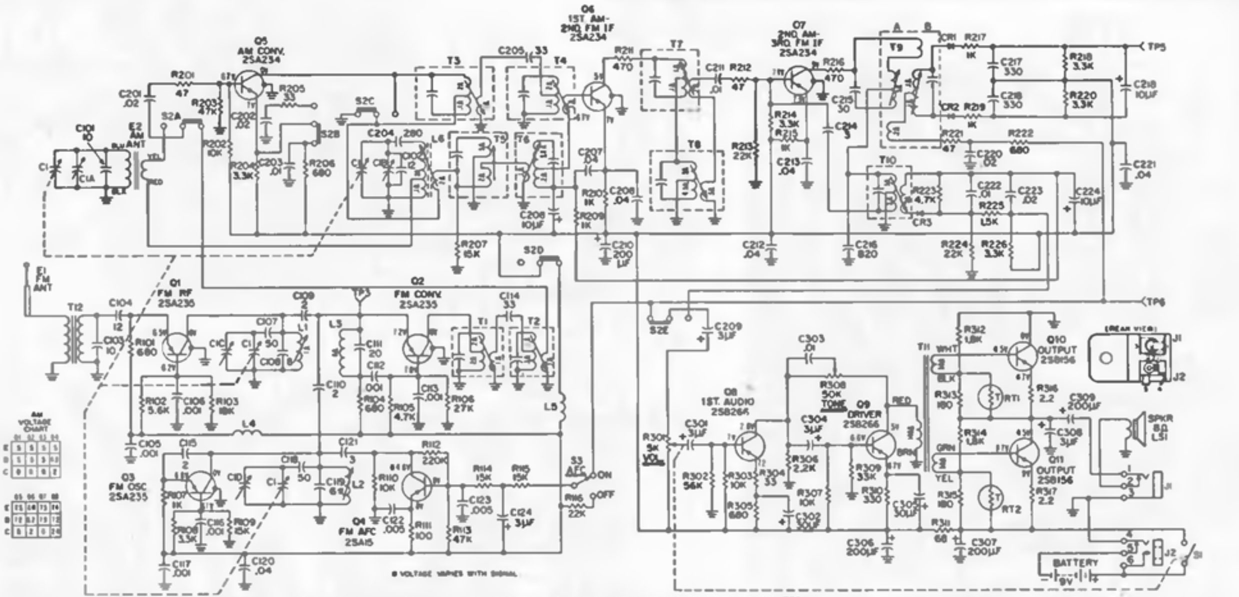

NOTES
1. ALL CAPACITANCE VALUES OF 1.0 AND ABOVE ARE PF, ALL VALUES LESS THAN 1.0 ARE IN MFDS UNLESS OTHERWISE INDICATED.
2. ALL VOLTAGES AND RESISTANCES MEASURED WITH "PRECISION MODEL 88 VTVM," AND BAND SWITCH IN FM AFC "ON" POSITION AS SHOWN, RESISTANCES MEASURED IN CIRCUIT.
3. BATTERY CURRENT FOR FM 25MA, AM 18MA
4. VOLTAGE AND CURRENT READINGS MEASURED WITH VOLUME AT MINIMUM AND NO SIGNAL.

TRANSISTOR BASINGS—BOTTOM VIEWS

AM VOLTAGE CHART

	Q5	Q6	Q7
E	7.5	8.4	7.5
B	7.3	8.2	7.3
C	0	.2	.3

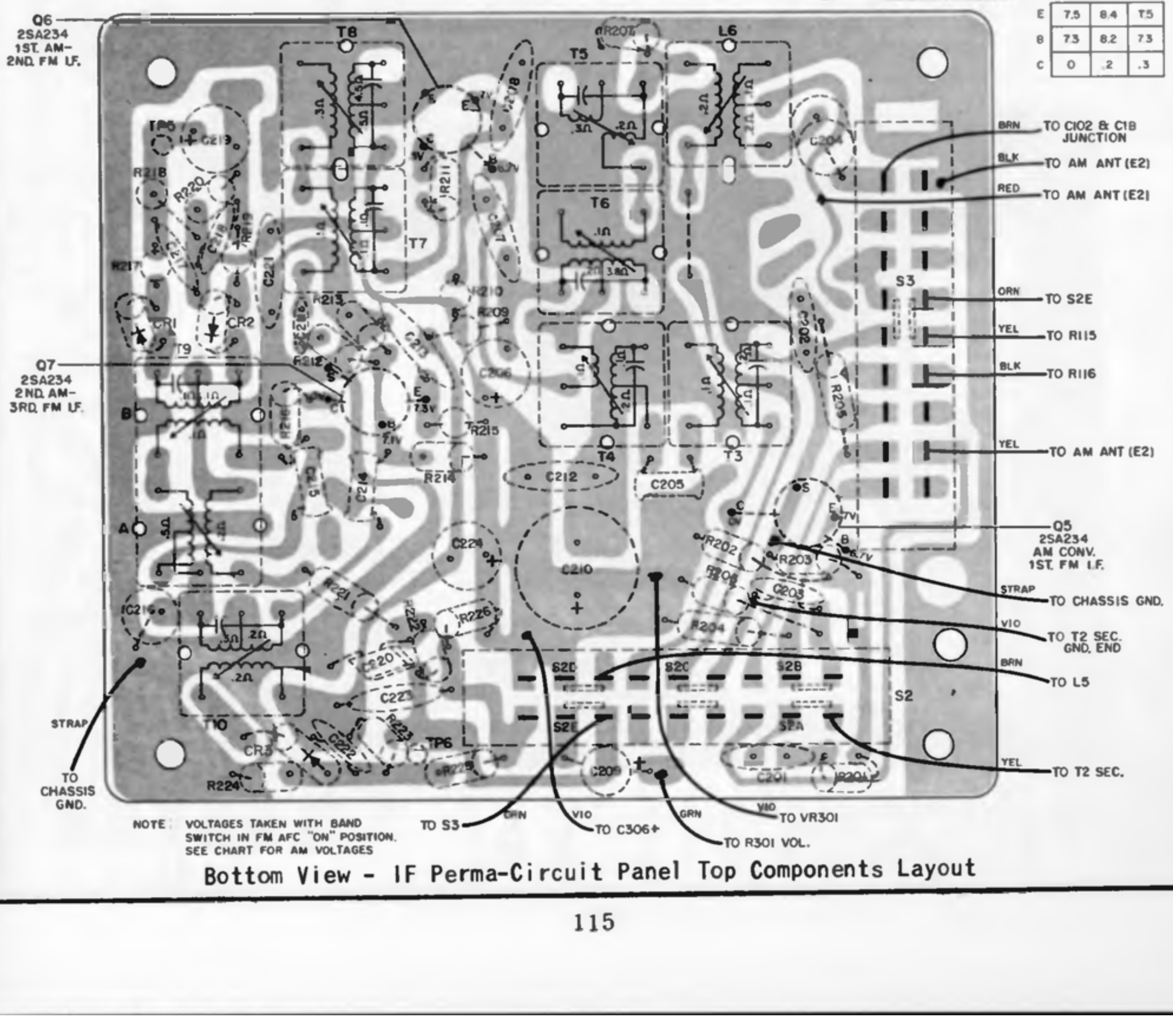

NOTE: VOLTAGES TAKEN WITH BAND SWITCH IN FM AFC "ON" POSITION. SEE CHART FOR AM VOLTAGES

Bottom View - IF Perma-Circuit Panel Top Components Layout

PHILCO Model NT-913, Continued from page at left

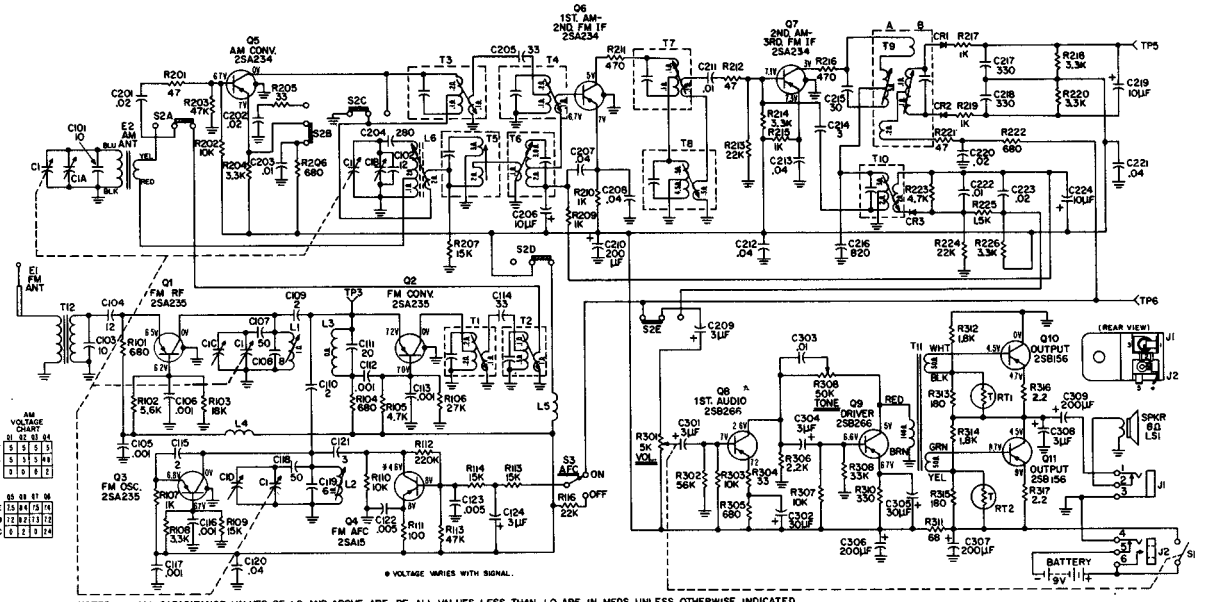

NOTES:
1. ALL CAPACITANCE VALUES OF 1.0 AND ABOVE ARE PF. ALL VALUES LESS THAN 1.0 ARE IN MFDS UNLESS OTHERWISE INDICATED.
2. ALL VOLTAGES AND RESISTANCES MEASURED WITH "PRECISION MODEL 68 VTVM," AND BAND SWITCH IN FM AFC "ON" POSITION AS SHOWN, RESISTANCES MEASURED IN CIRCUIT.
3. BATTERY CURRENT FOR FM 25MA, AM 18MA.
4. VOLTAGE AND CURRENT READINGS MEASURED WITH VOLUME AT MINIMUM AND NO SIGNAL.

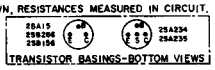

AM VOLTAGE CHART

	Q5	Q6	Q7
E	7.5	8.4	7.5
B	7.3	8.2	7.3
C	0	.2	.3

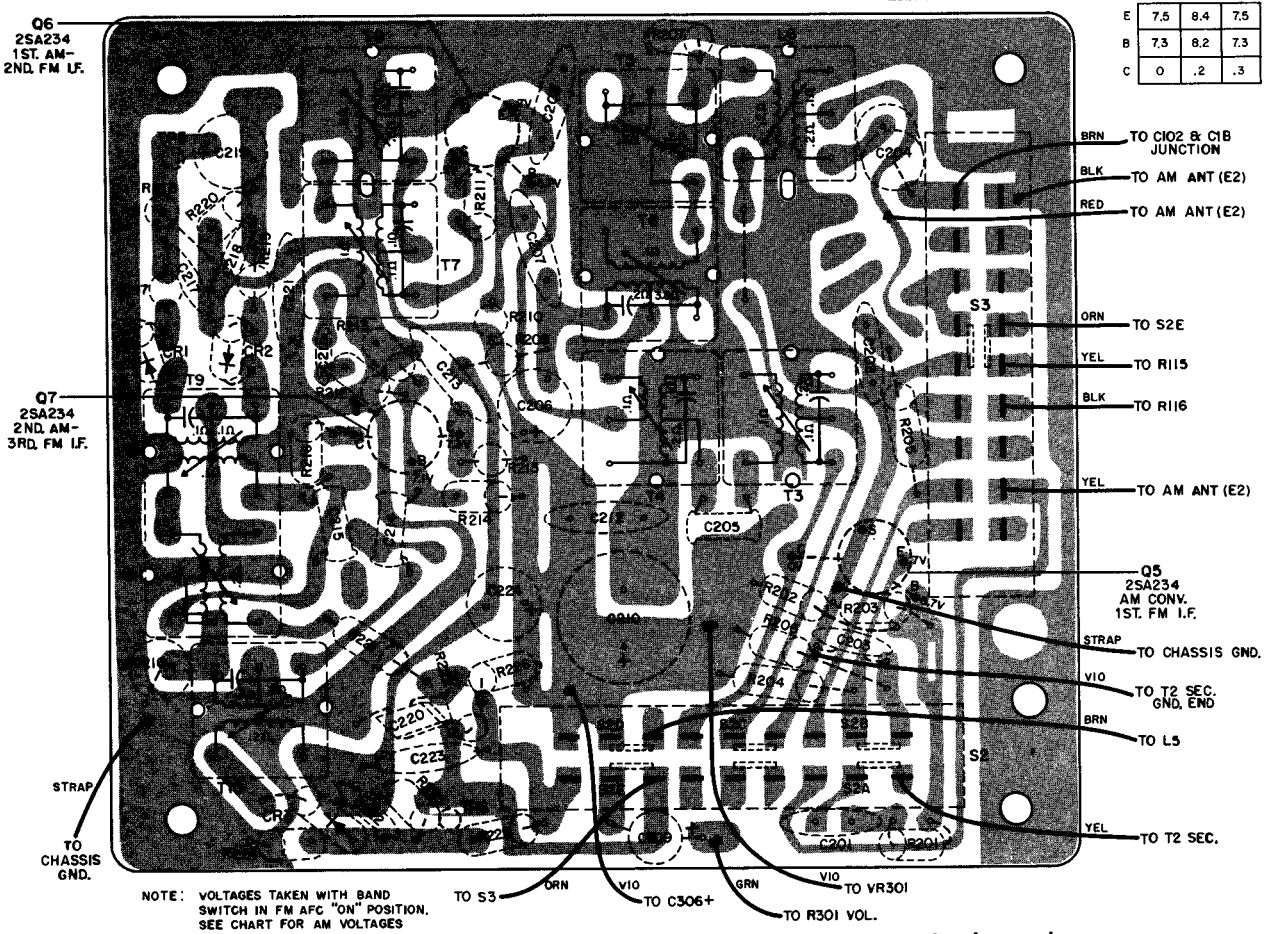

NOTE: VOLTAGES TAKEN WITH BAND SWITCH IN FM AFC "ON" POSITION. SEE CHART FOR AM VOLTAGES

Bottom View - IF Perma-Circuit Panel Top Components Layout

PHILCO MODEL NT-1004

(Continued on next page)

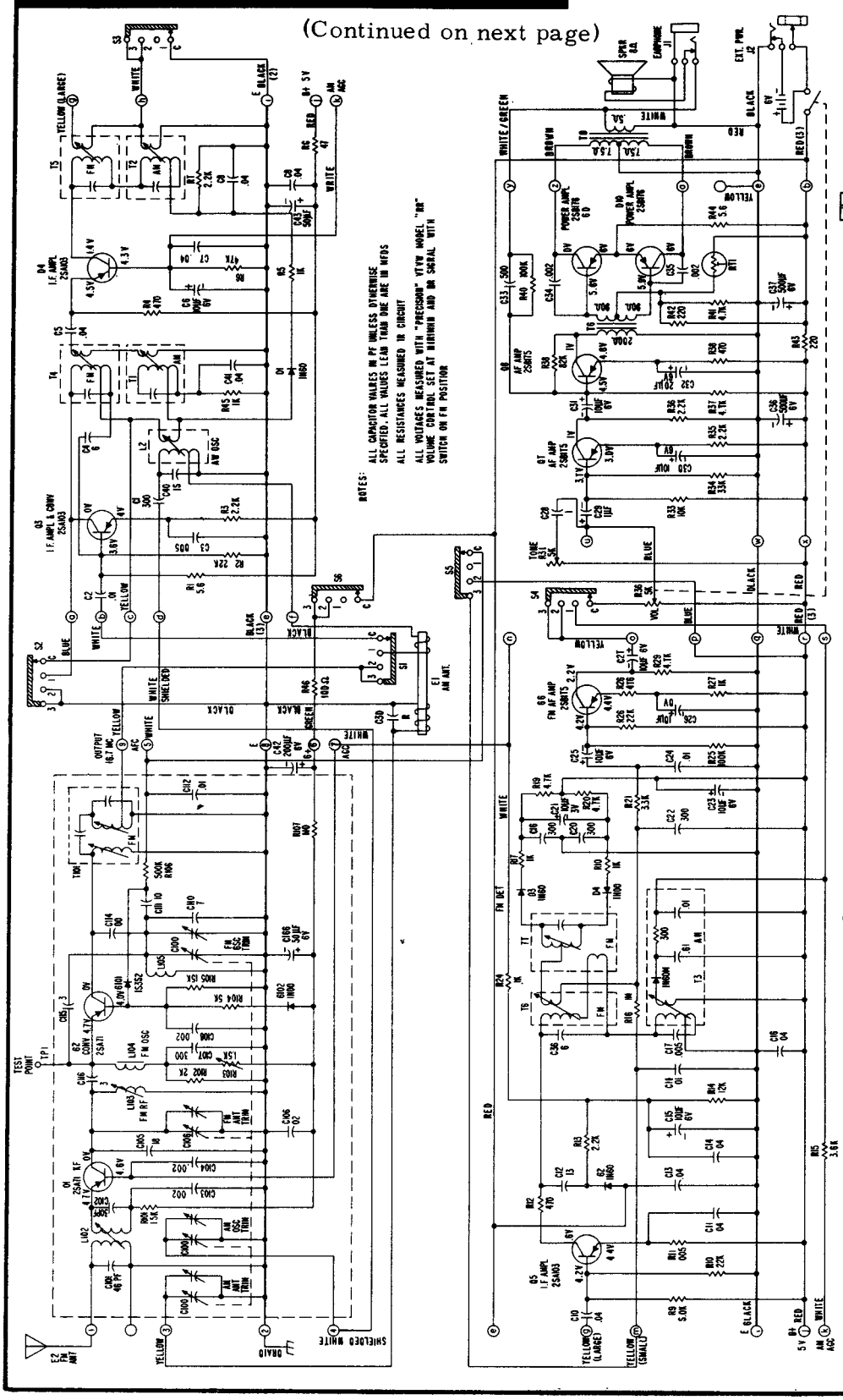

AM-FM TRANSISTOR PORTABLE—MODEL NT-1004

Chassis Removal

1. Remove Battery Sleeve with Batteries.
2. Remove 4 Screws located at each corner of chassis.
3. Remove Knobs and pull FM antenna out of cabinet and fold down.
4. Lift chassis straight up out of cabinet, now bottom sides of Perma-Circuit Panels are accessible.

Tuner Removal

1. Remove chassis from cabinet.
2. Remove Dial Cord, Tuning Sleeve and Tuning Gear Assy.
3. Unsolder all leads including grounding lug to chassis.
4. Remove three screws holding tuner to chassis frame.

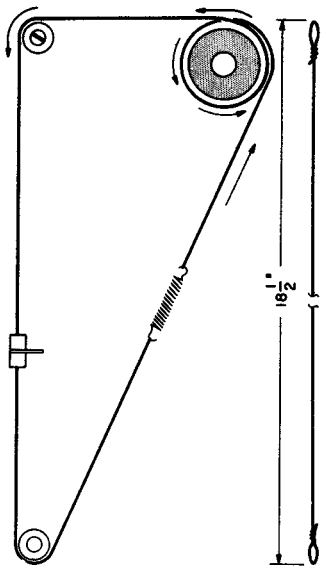

Dial Cord - Model NT1004

PHILCO Model NT-1004

(Continued from page adjacent at left)

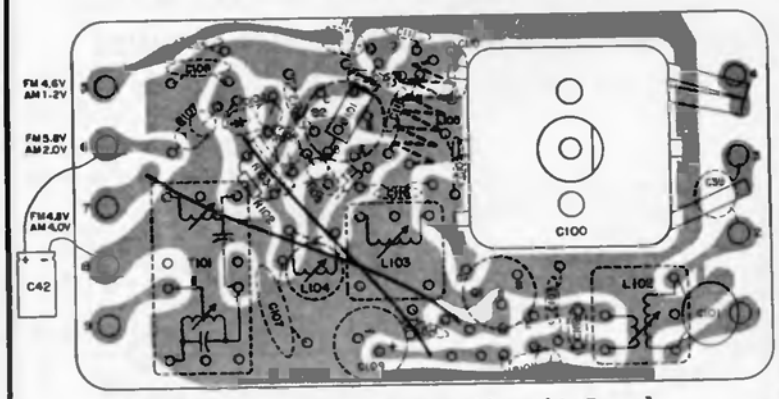

Bottom View - Tuner Perma-Circuit Panel

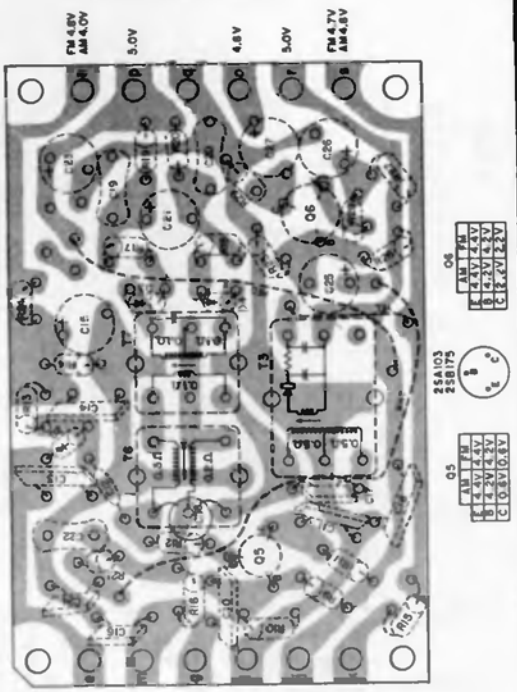

Bottom View - IF and Detector Perma-Circuit Panel

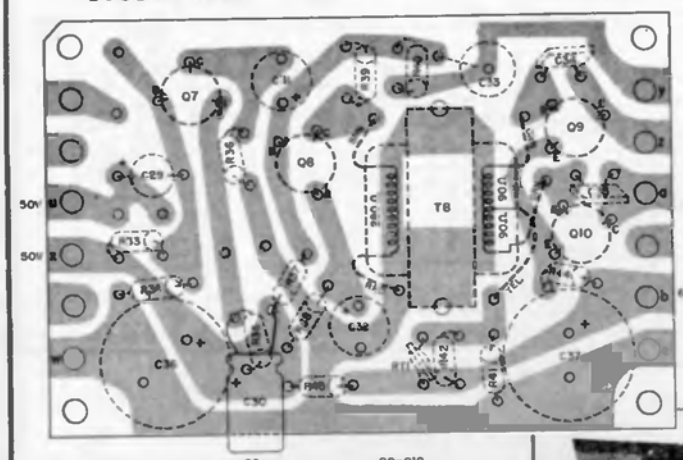

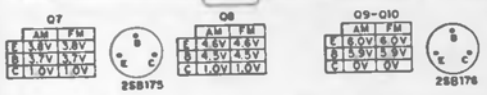

Bottom View - Audio Perma-Circuit

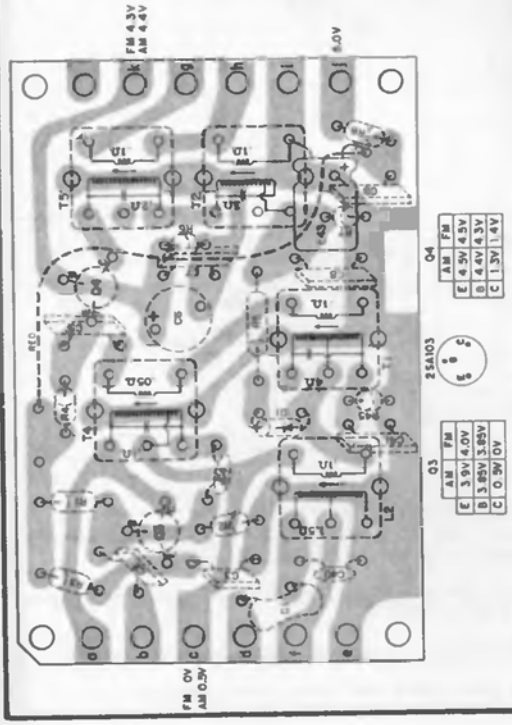

Bottom View - AM Conv.-FM AGC Perma-Circuit Panel

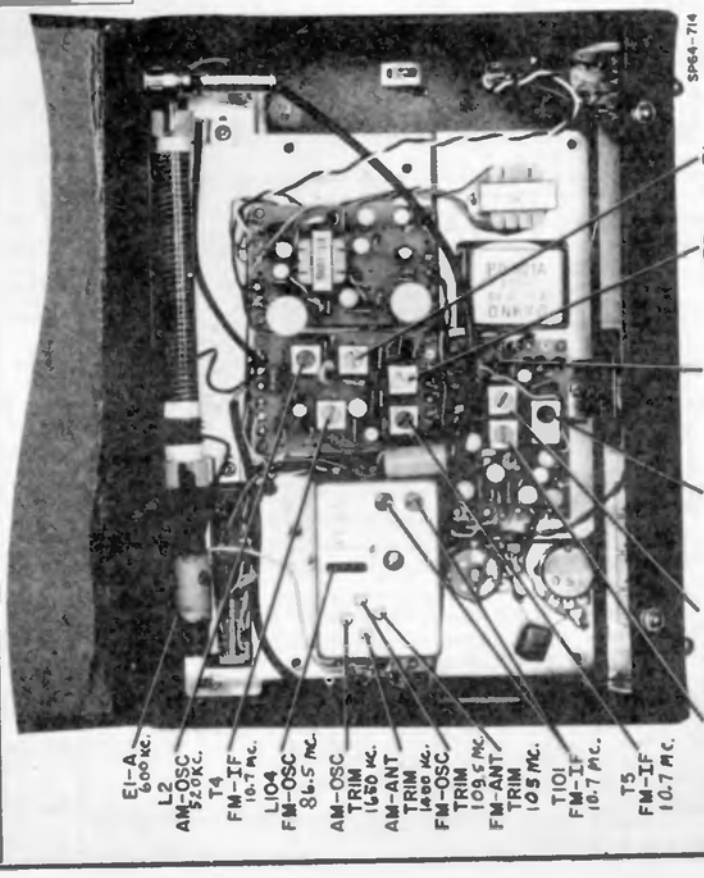

Alignment Points - Model NT1004

PHILCO

MODELS M-1001, M-1620, M-1662, M-1663, M-1664, & M-1700 AMPLIFIER & TUNER

Also Model M-1701 is like M-1663

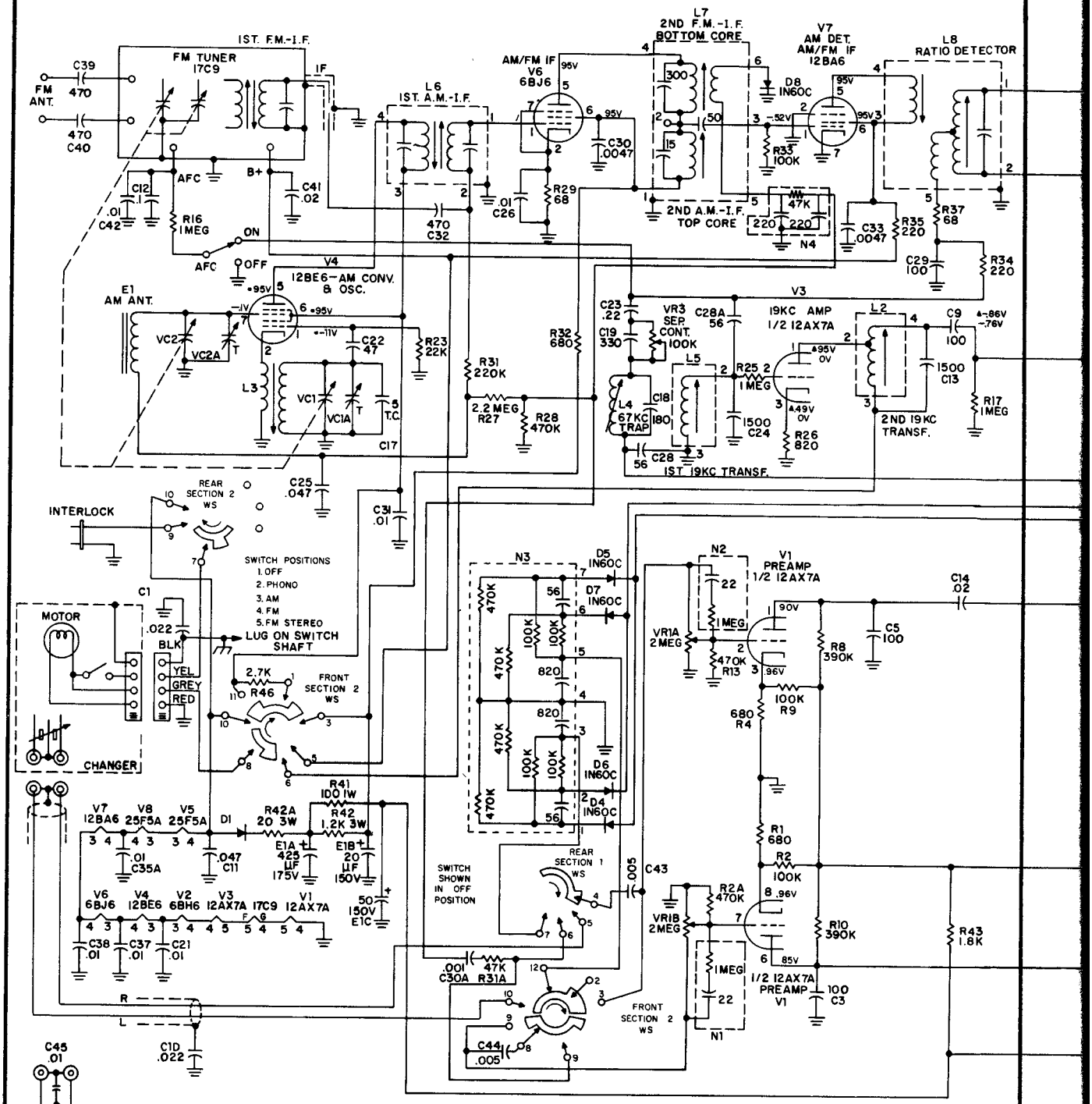

AMPLIFIER AND TUNER PANEL REMOVAL
MODELS M-1001, M-1620, M-1662, M-1663, M-1664

1. Unsolder all wires holding perma-circuit panel in chassis.
2. Remove two nuts securing function switch and loudness control front dial panel.
3. Remove three screws securing rear chassis piece and remove piece.
4. Remove five screws securing panel to chassis.
5. Pull panel back and away from chassis.

PHILCO

MODELS M-1001, M-1620, M-1662, M-1663, M-1664, & M-1700 AMPLIFIER & TUNER

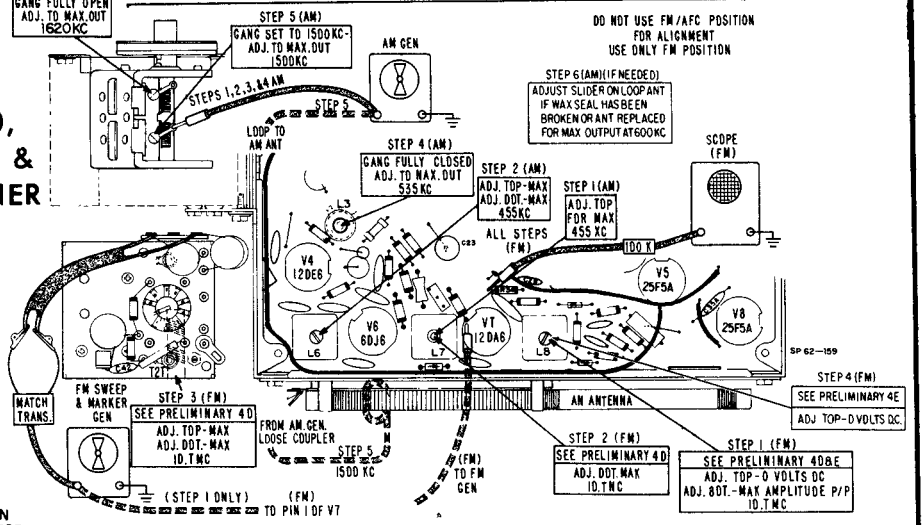

Alignment Procedure Chart

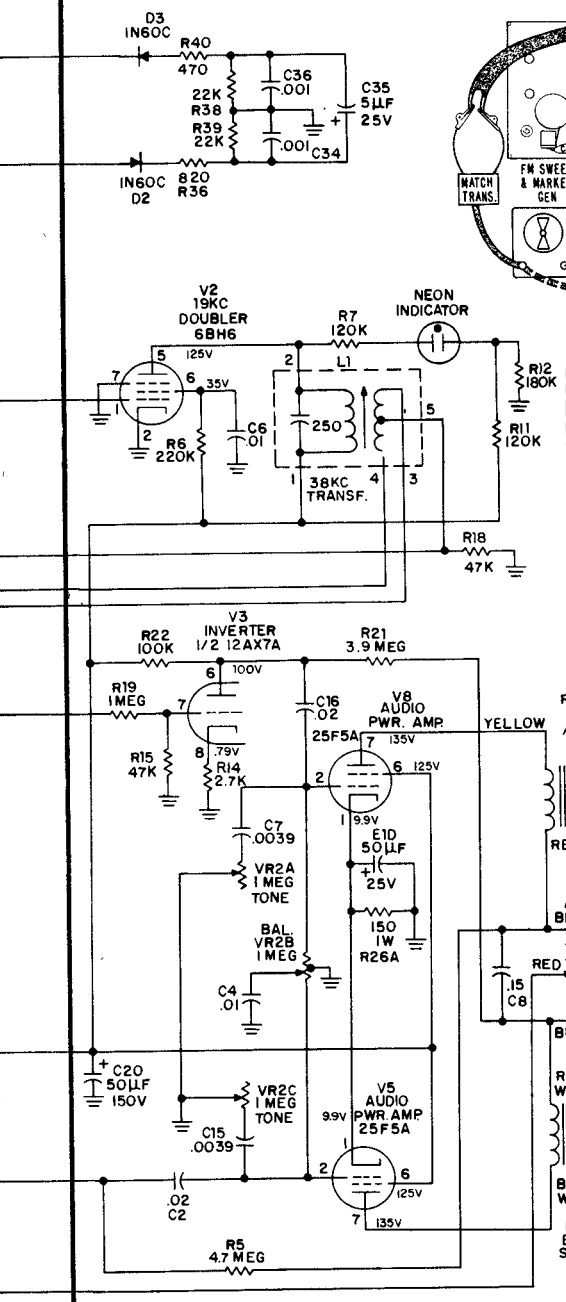

ALL VOLTAGES TAKEN WITH "PRECISION" VTVM MODEL "88" ALL CONTROLS SET AT MINIMUM, SELECTOR SWITCH SET TO PHONO POSITION UNLESS OTHERWISE NOTED.
•VOLTAGES TAKEN IN AM POSITION.
▲VOLTAGES TAKEN IN FM STEREO POSITION.

Circuit for M-1001 differs in some details.

(Continued on page 120)

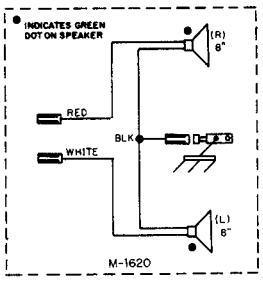

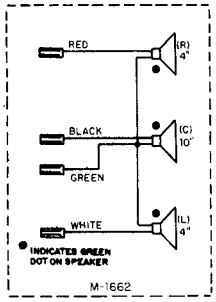

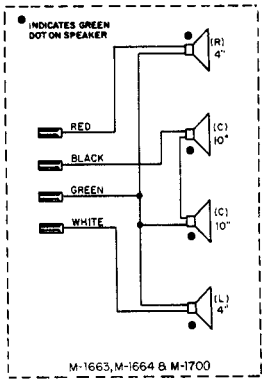

PRELIMINARY ALIGNMENT INFORMATION

1. Connect amplifier through isolation transformer to eliminate dangerous shock hazard.
2. Allow receiver and test equipment 15 minutes to warm up and stabilize.
3. For AM Alignment -
   - A. Connect VTVM across one external speaker jack.
   - B. Use 30% modulation on generator for AM alignment.
   - C. Proceed with alignment steps as illustrated in alignment chart.
4. For FM Alignment -
   - A. Connect FM generator, through a 72 ohm to 300 ohm matching network, to antenna terminals.
   - B. Use ±120KC sweep deviation for FM alignment.
   - C. Keep generator output as low as possible throughout FM alignment procedure.
   - D. Adjust top and bottom core of T2T, bottom core of L7 and bottom core of L8 for a symmetrical maximum amplitude "S" curve with 10.7 mc marker in the middle. Curve must be obtained in T2T with tuning slugs nearest to end of coil form.
   - E. Add VTVM across scope connections to adjust only the top of L8.
   - F. Proceed with alignment steps as illustrated in alignment chart.

PHILCO Models M-1001, M-1620, M-1662, M-1663, M-1664, M-1700, Continued

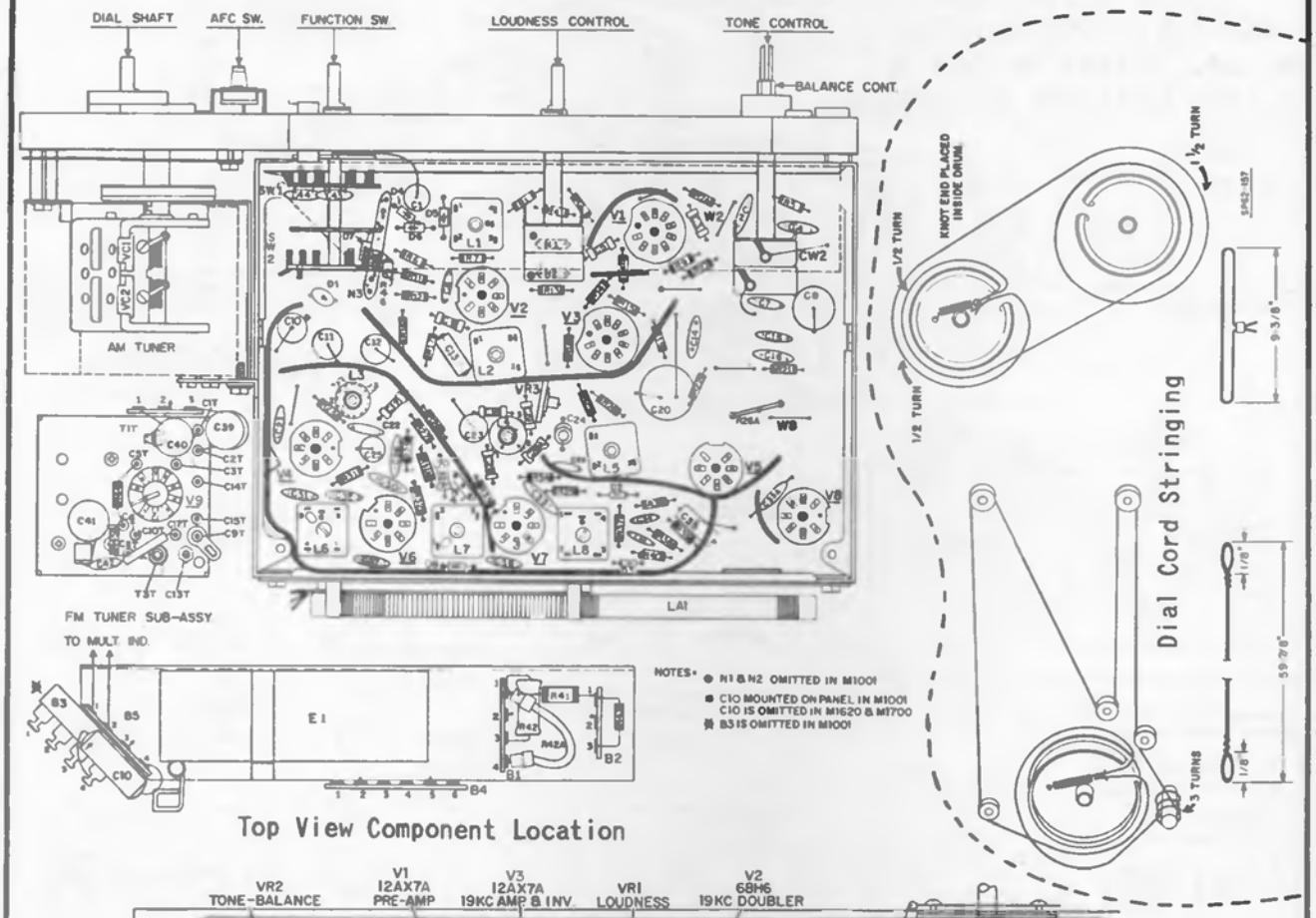

Top View Component Location

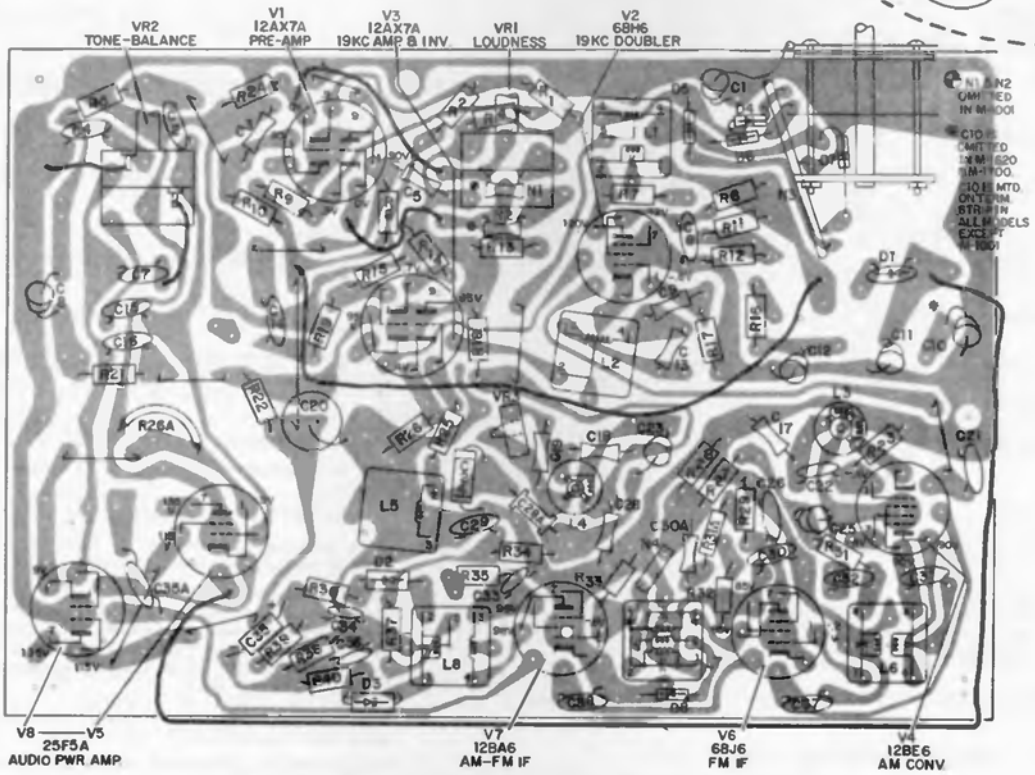

Bottom Perma-Circuit View Parts Location

PHILCO Models M-1666, M-1669, M-1680, M-1688, M-1689, M-1704

(Circuit diagram and other information on pages 122-123)

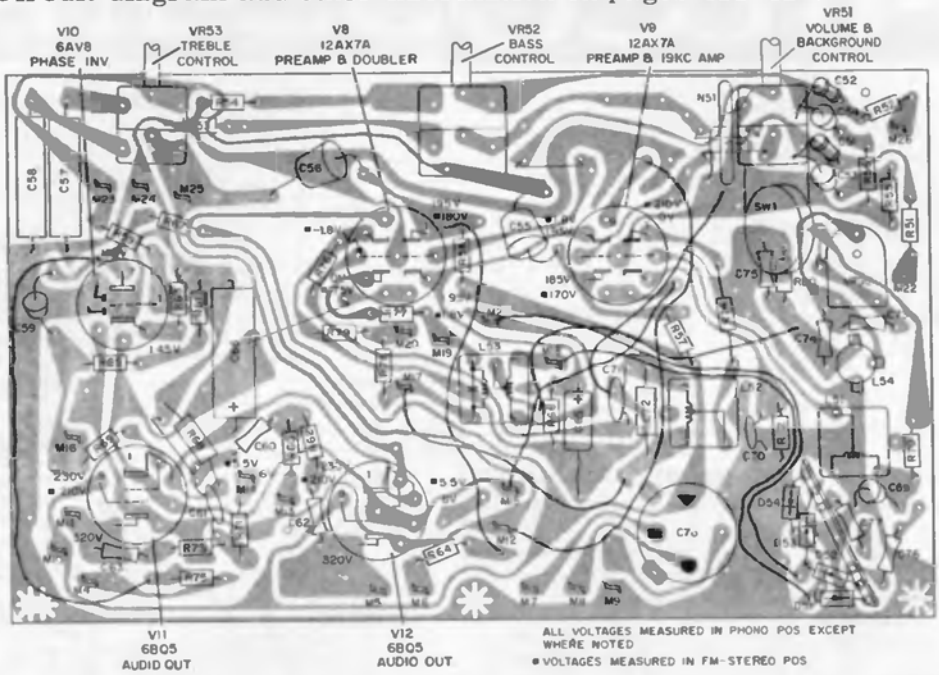

Bottom Perma-Circuit View, Parts Location

PRELIMINARY ALIGNMENT INFORMATION

1. Connect amplifier through isolation transformer to eliminate dangerous shock hazard.

2. Allow receiver and test equipment 15 minutes to warm up and stabilize.

3. For AM Alignment -
   A. Connect VTVM across center output transformer.
   B. Use 30% modulation on generator for AM alignment.
   C. Proceed with alignment steps as illustrated in alignment chart.

4. For FM Alignment -
   A. Connect FM generator, through a 72 ohm to 300 ohm matching network, to antenna terminals.
   B. Alignment is to be made in FM position. DO NOT USE FM/AFC position.
   C. Use ±75 kc sweep deviation for FM alignment.
   D. Keep generator output as low as possible throughout FM alignment procedure.

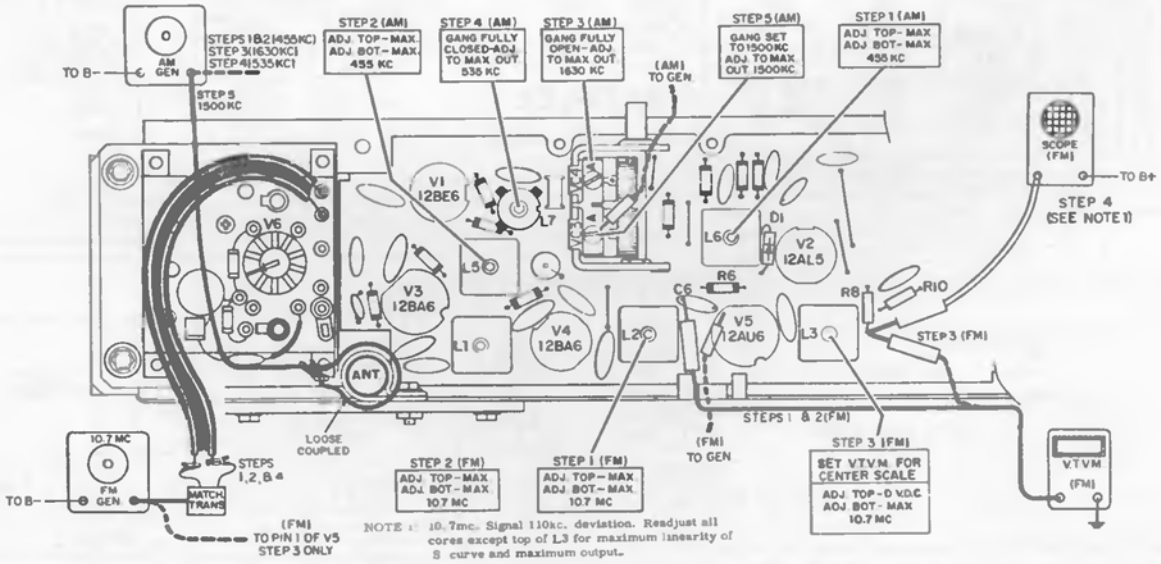

Alignment Procedure Chart AM-FM Tuner

PHILCO

MODELS M-1666, M-1669, M-1680, M-1688, M-1689, & M-1704 AMPLIFIER & TUNER

(See page 121 for other data)

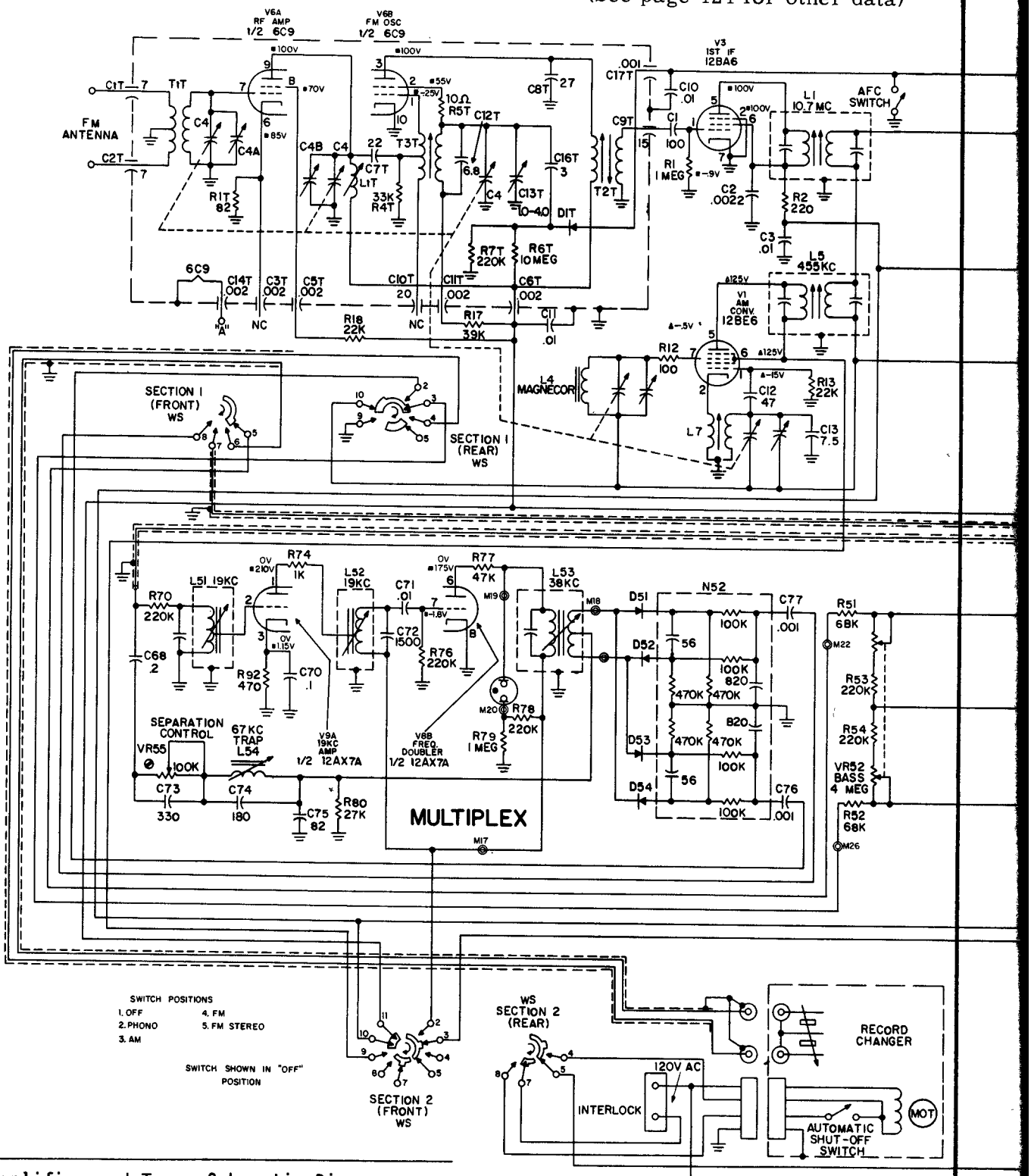

Amplifier and Tuner Schematic Diagram

PHILCO

MODELS M-1666, M-1669, M-1680, M-1688, M-1689, M-1704, & M-1741 AMPLIFIER & TUNER

(Continued)

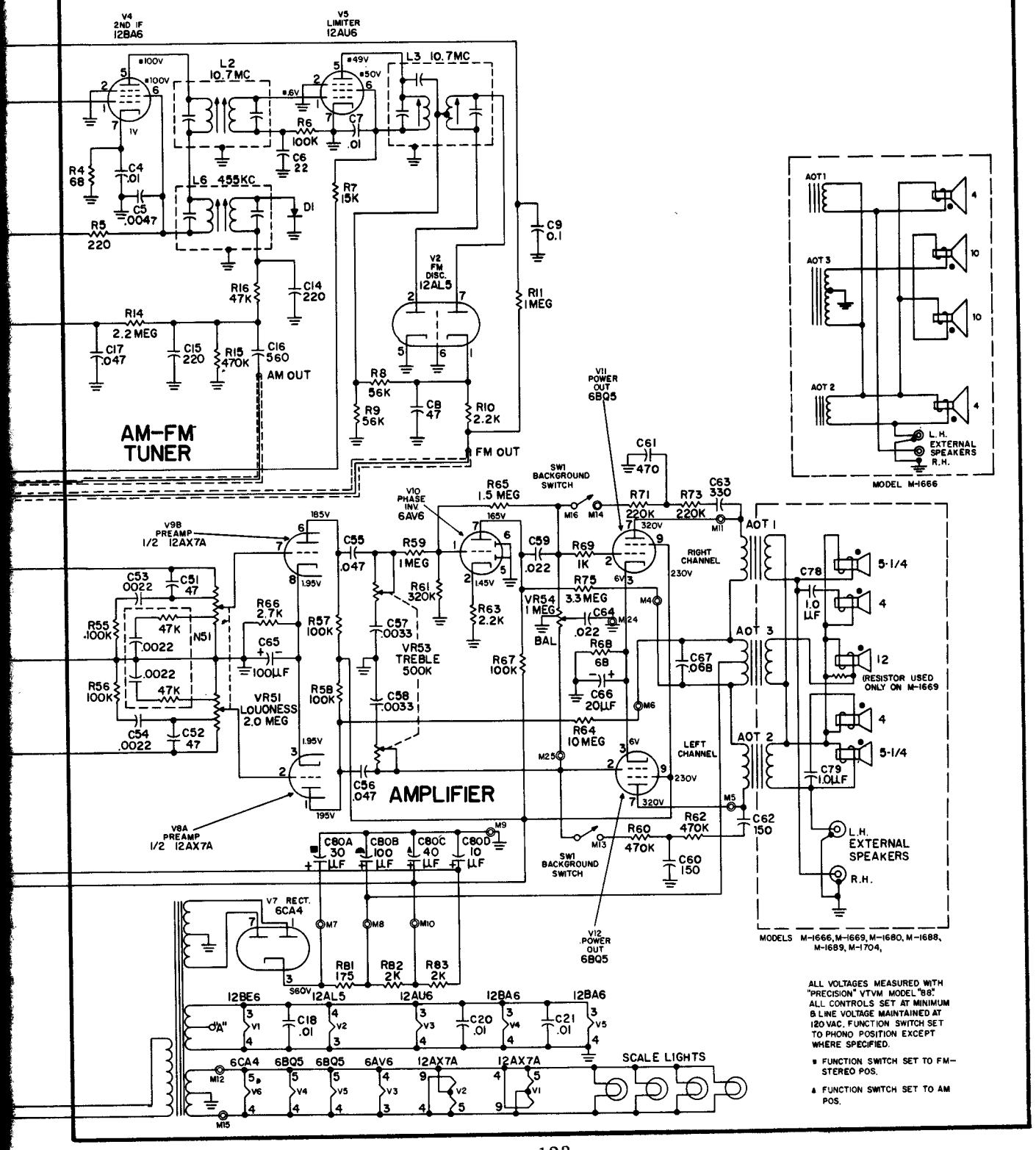

ALL VOLTAGES MEASURED WITH "PRECISION" VTVM MODEL "88". ALL CONTROLS SET AT MINIMUM & LINE VOLTAGE MAINTAINED AT 120 VAC. FUNCTION SWITCH SET TO PHONO POSITION EXCEPT WHERE SPECIFIED.

■ FUNCTION SWITCH SET TO FM-STEREO POS.

▲ FUNCTION SWITCH SET TO AM POS.

PHILCO

PORTABLE PHONO MODEL N1508

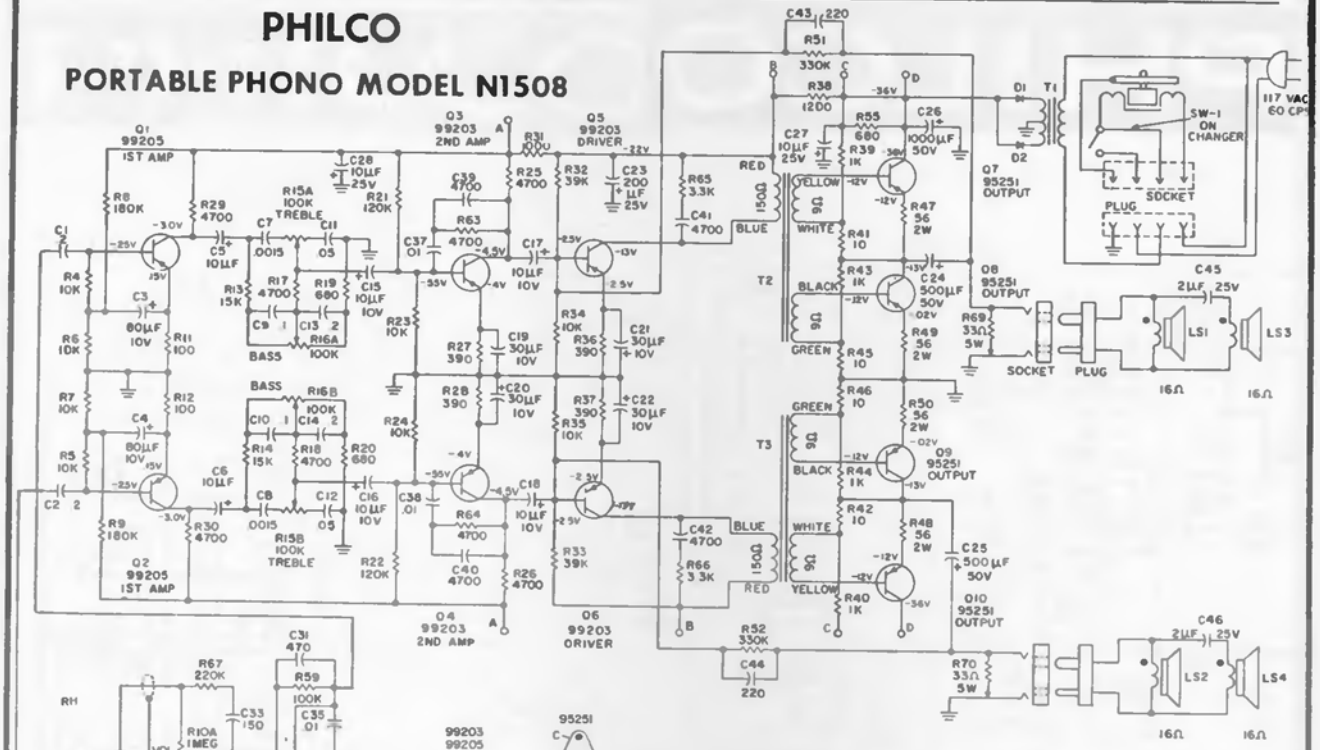

NOTES:

VOLTAGES MEASURED WITH VTVM "PRECISION" MODEL "88" TO GROUND B+

ALL CAPACITANCE VALUES OF 10 AND ABOVE ARE IN PF AND ALL VALUES BELOW 10 ARE IN UF UNLESS OTHERWISE INDICATED

ALL RESISTANCES MEASURED IN-CIRCUIT WITH VTVM

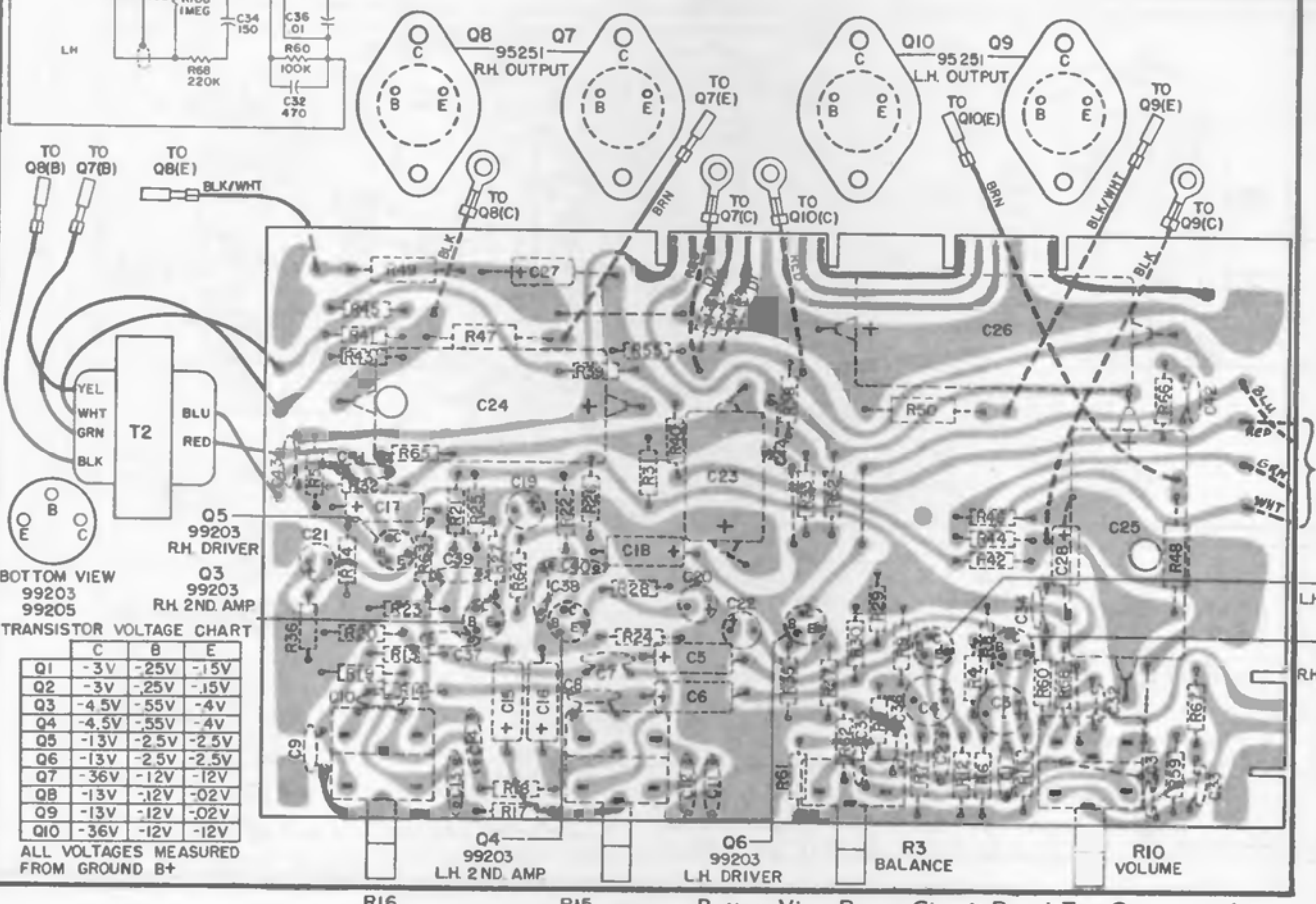

TRANSISTOR VOLTAGE CHART

	C	B	E
Q1	-3V	-.25V	-.15V
Q2	-3V	-.25V	-.15V
Q3	-4.5V	-.55V	-4V
Q4	-4.5V	-.55V	-4V
Q5	-13V	-2.5V	-2.5V
Q6	-13V	-2.5V	-2.5V
Q7	-36V	-12V	-12V
Q8	-13V	-.12V	-.02V
Q9	-13V	-.12V	-.02V
Q10	-36V	-12V	-12V

ALL VOLTAGES MEASURED FROM GROUND B+

Bottom View Perma Circuit Panel-Top Component Layout

RCA VICTOR

Model VFE 01W

Chassis RS-188B

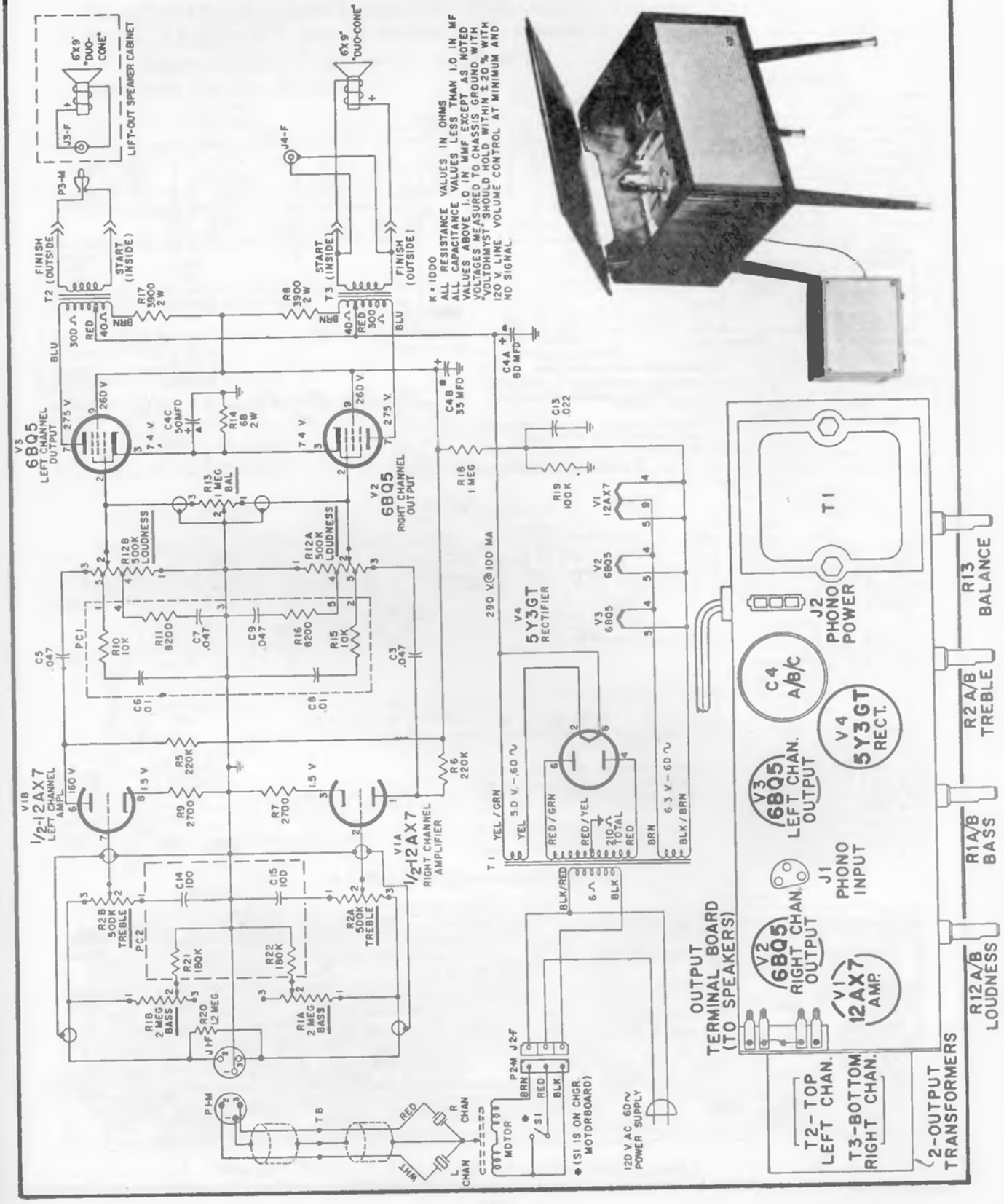

RCA VICTOR

Models RFA 11V, VX, RFA 15A, AX, V, VX, Z, ZX, use Chassis RC-1213A, AX
Models RFD 11V, VX, use Chassis RC-1213J, JX
Model RFD 15V uses Chassis RC-1213C or K
Models RFD 19G, V, Z, use Chassis RC-1213D, L
(Material below and on page at right)

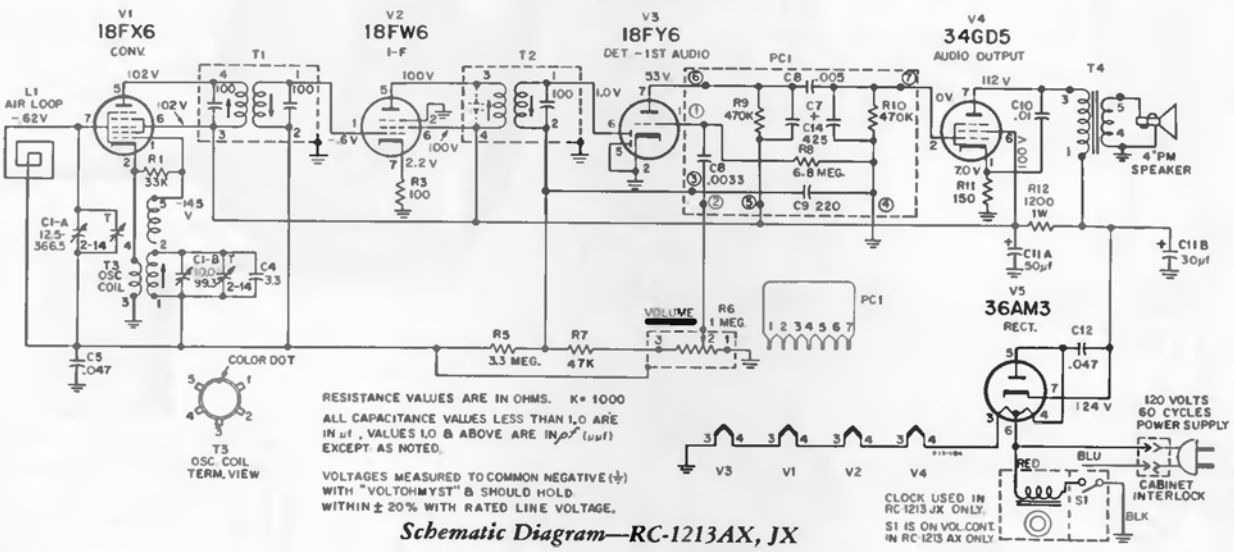

Schematic Diagram—RC-1213AX, JX

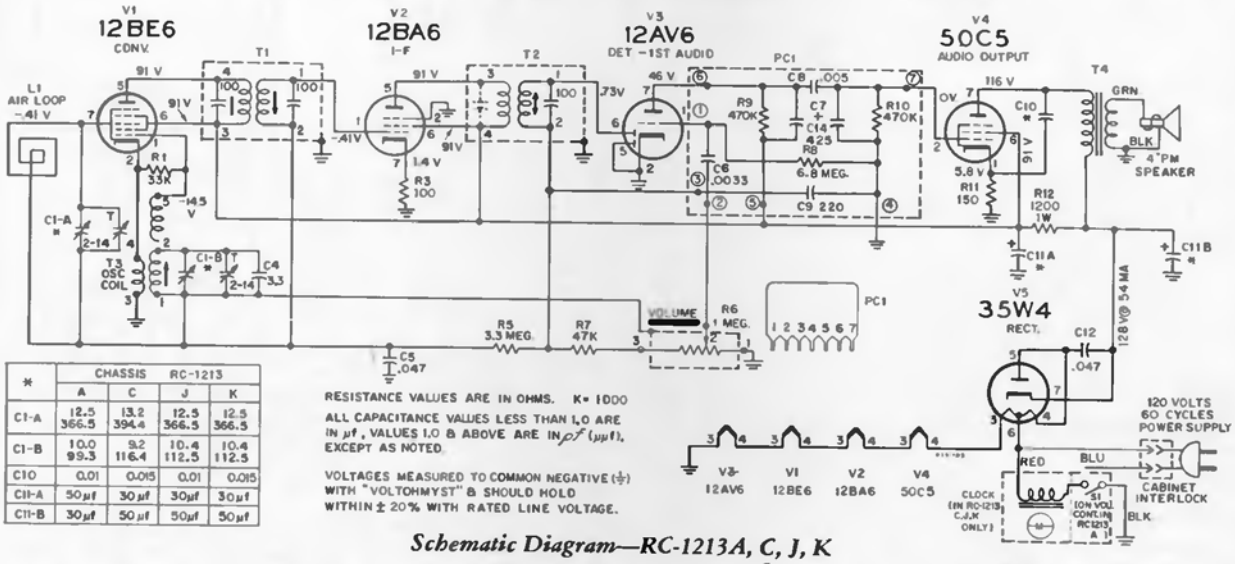

*	CHASSIS RC-1213			
	A	C	J	K
C1-A	12.5 366.5	13.2 394.4	12.5 366.5	12.5 366.5
C1-B	10.0 99.3	9.2 116.4	10.4 112.5	10.4 112.5
C10	0.01	0.015	0.01	0.015
C11-A	50µf	30µf	30µf	30µf
C11-B	30µf	50µf	50µf	50µf

Schematic Diagram—RC-1213A, C, J, K

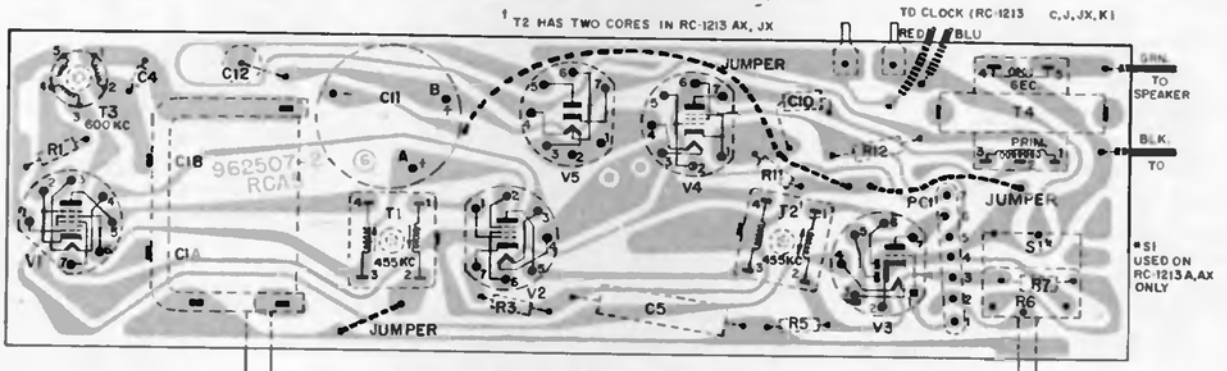

Chassis Layout—RC-1213A, AX, C, J, JX, K (Wiring side)

RCA VICTOR

(Continued from page adjacent at left)

Models RFA 11V, VX, RFA 15A, AX, V, VX, Z, ZX, all use Chassis RC-1213A, AX
Models RFD 11V, VX, use Chassis RC-1213J, JX
Model RFD 15V uses Chassis RC-1213C or K
Models RFD 19G, V, Z, use Chassis RC-1213D, L

TUBE AND CHASSIS ACCESSIBILITY

1. DO NOT ATTEMPT TO REMOVE THE KNOBS. The tuning and volume control knobs are held captive to the cabinet by retainers on their shafts.
2. Remove the back cover by lifting the protrusions on the bottom of the back cover, out of the slots in the base of the cabinet.
3. Unsolder speaker leads if necessary. Avoid putting a strain on the speaker leads.
4. Remove two chassis retainers (screws or clips), one at the volume control and one on the left end mounting.
5. Grasp tuning capacitor and volume control, and pull chassis out of knobs and mounting slots.

To reassemble—reverse above procedure.

The "Security Sealed Circuitry" chassis used in these instruments are all basically similar; the differences, where they exist, are shown in the schematic diagrams, in the chassis layout diagrams and in the replacement parts list. 100 ma. type tubes are used in chassis RC-1213AX and JX, and 150 ma. type tubes in chassis RC-1213A, C, D, J, K and L. The "X" chassis are found in the "X" models.

ALIGNMENT PROCEDURE

Step	Connect high side of signal gen. to—	Set signal gen. to—	Turn radio dial to—	Adjust—for peak output
1	Pin #1 of V2 (12BA6 or 18FW6) through .01 mf capacitor	455 kc (Modulated)	Quite point near 1600 kc	T2 (2nd I-F trans.), top and bottom cores (See note)
2	Pin #7 of V1 (12BE6 or 18FX6) through .01 mf capacitor			T1 (1st I-F trans.), top and bottom cores
3	Repeat steps 1 and 2			
4	Short wire placed near antenna to radiate signal	1620 kc (Modulated)	Gang fully open	C1-B-T (osc. trimmer)
5		1400 kc (Modulated)	1400 kc	C1-A-T (Ant. trimmer)
6		600 kc (Modulated)	600 kc (rock gang)	T3 (osc. coil)
7	Repeat steps 3, 4 and 5			

NOTE: In chassis using the 150 ma. type tubes, T2 may have only one core which may be adjusted from either the top or bottom.

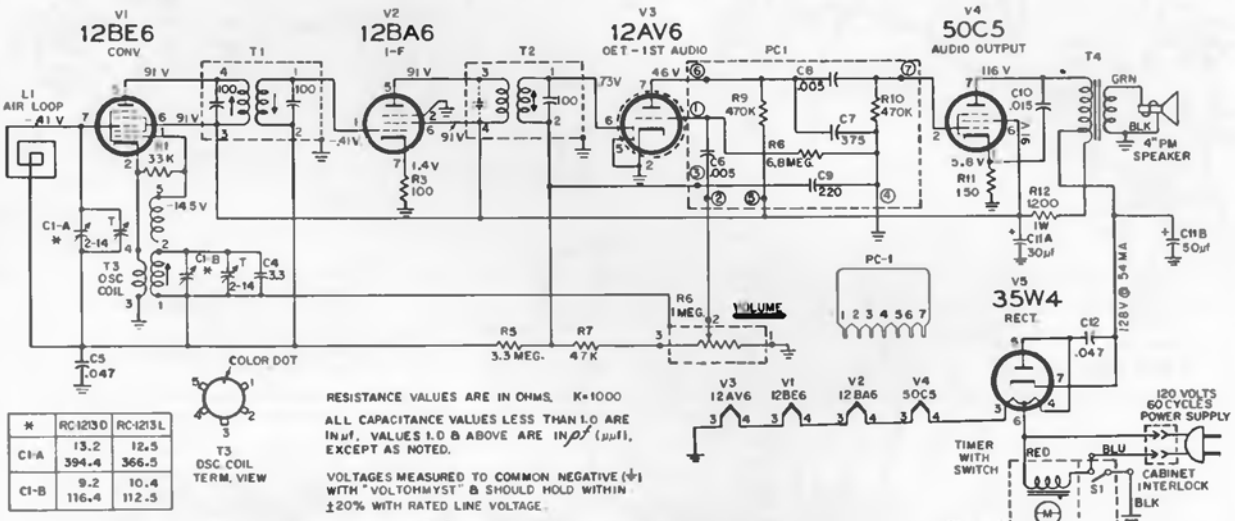

*	RC1213D	RC-1213L
C1-A	13.2 394.4	12.5 366.5
C1-B	9.2 116.4	10.4 112.5

Schematic Diagram—RC-1213D, L

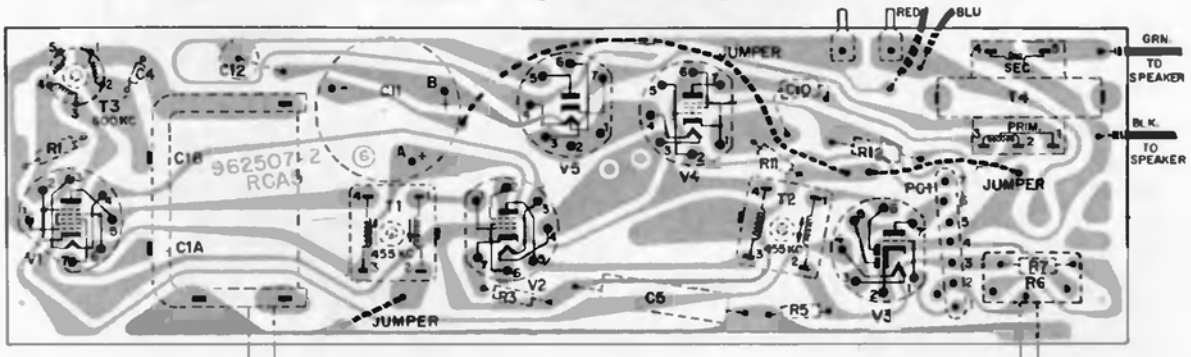

Chassis Layout—RC-1213D, L (Wiring Side)

RCA VICTOR

Models RFC 15E, V, RFC 19W, use Chassis RC-1210F, and Model RFS 15W use Chassis RC-1210E.

(Continued on the page at right)

FREQUENCIES	Tuning	IF
AM	535-1620 kc	455 kc
FM	88-108 mc	10.7 mc

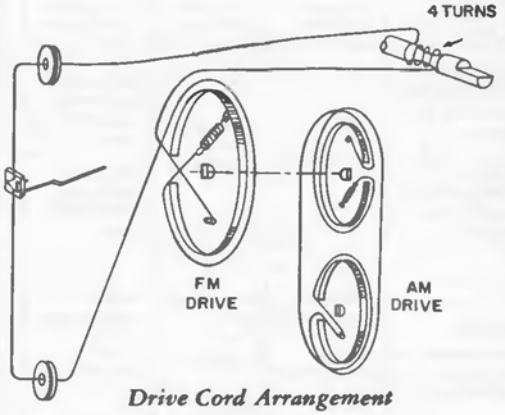

Drive Cord Arrangement

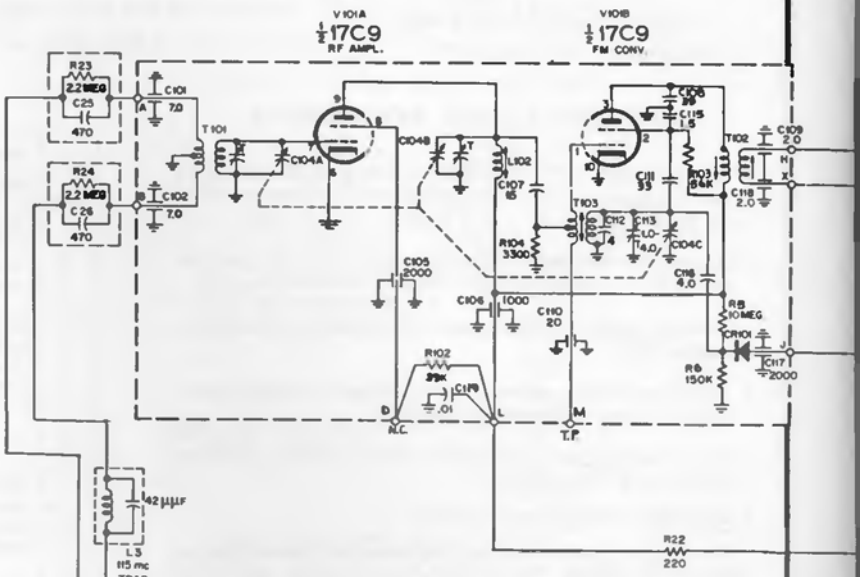

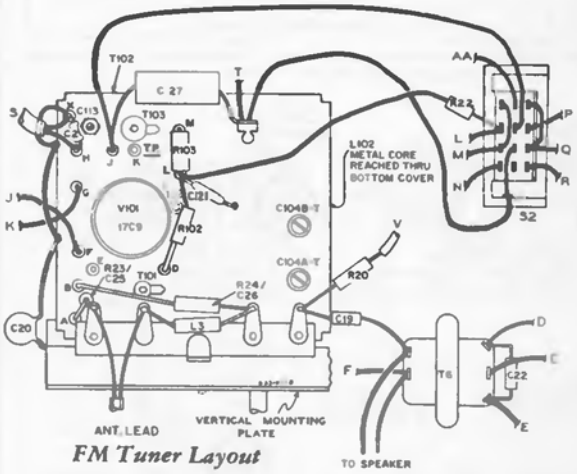

FM Tuner Layout

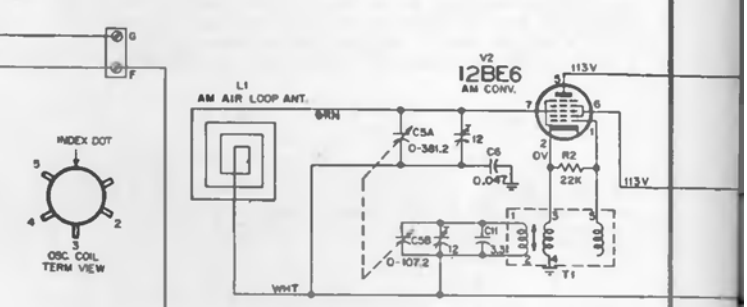

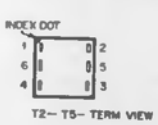

K=1000
ALL RESISTANCE VALUES IN OHMS
ALL CAPACITANCE VALUES LESS THAN 1.0 IN μF, VALUES ABOVE 1.0 IN μμF
UNLESS OTHERWISE INDICATED
VOLTAGES MEASURED TO COMMON NEG. (⏚) WITH "VOLTOHMYST" B SHOULD HOLD WITHIN ±20% WITH 120 VOLT INPUT.

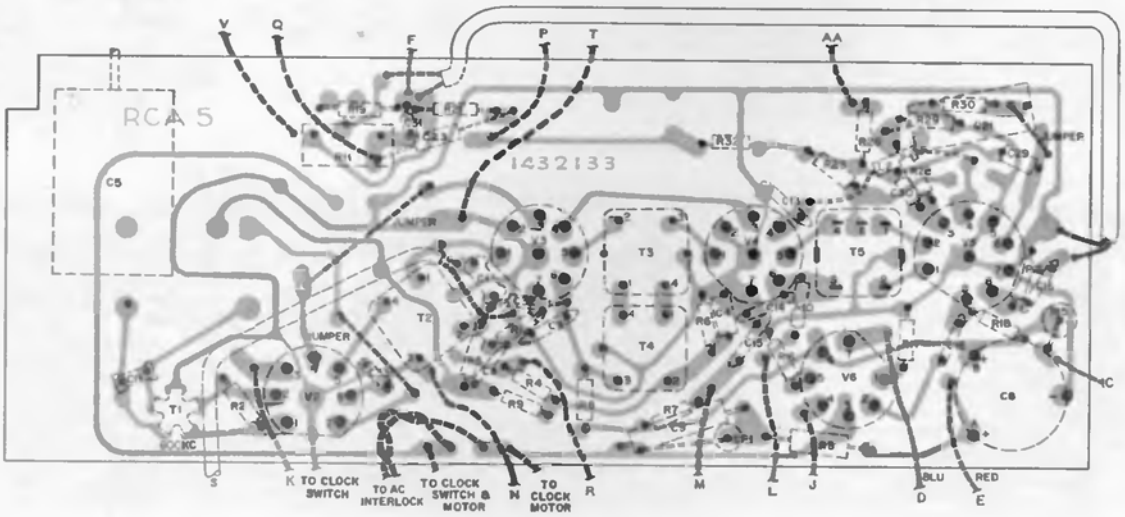

Chassis Layout (Wiring side)

RCA VICTOR

Models RFC 15E, V, RFC 19W, use Chassis RC-1210F, and Model RFS 15W use Chassis RC-1210E.

(Continued from page at left)

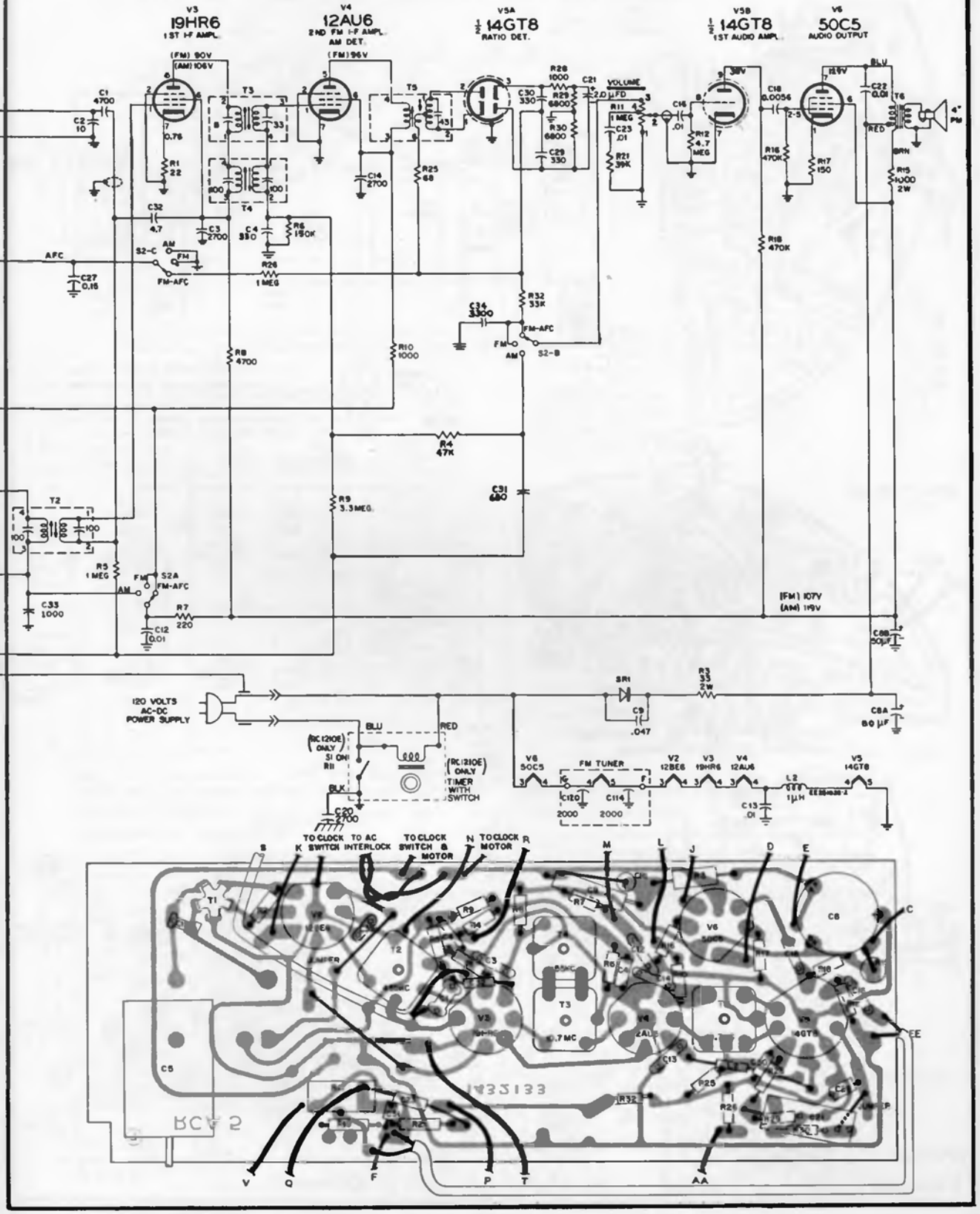

Chassis Layout *(Component side)*

RCA VICTOR

Models VFP 09E, T, VFP 11A, B, G, use Chassis RP-219-39
Models VFP 19E, T, VFP 21A, T, VFP 32E, G, use RP-219-49
Models VFP 43A, VFP 49E, use Chassis RP-219-42
Models VFP 58A, VFP 60E, use Chassis RP-219A-12

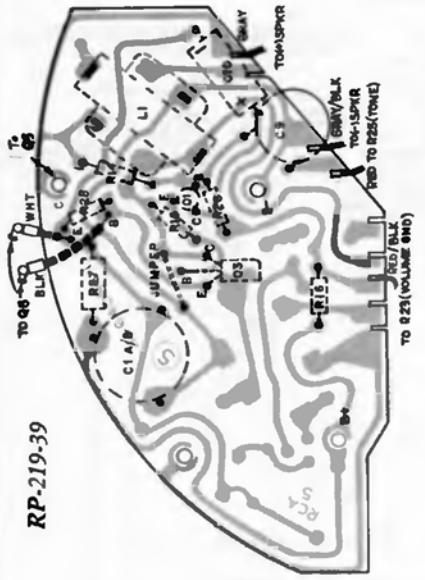

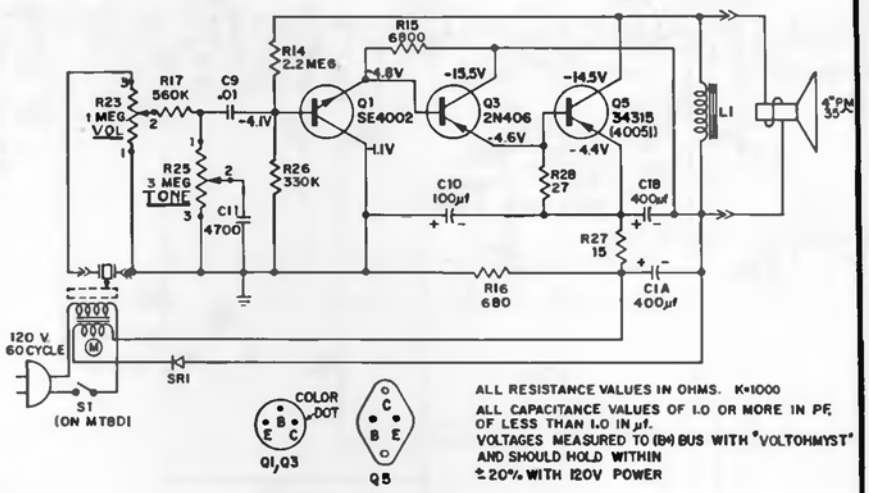

RP-219-39

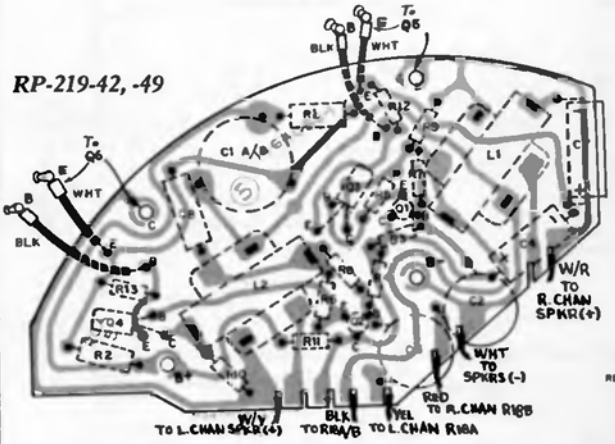

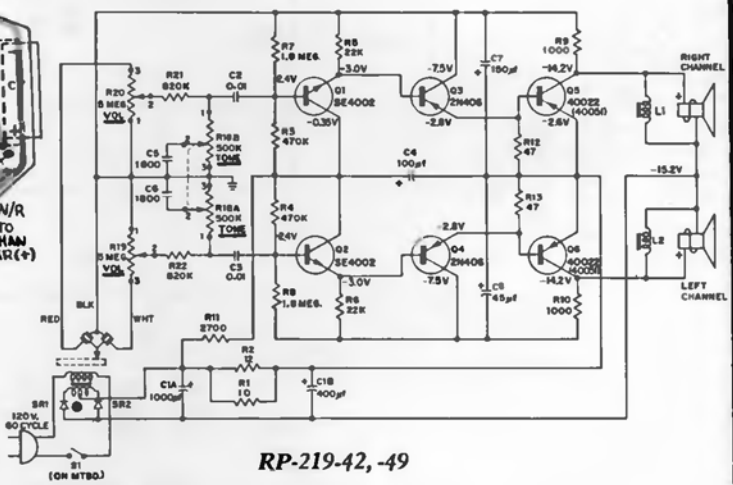

RP-219-42, -49

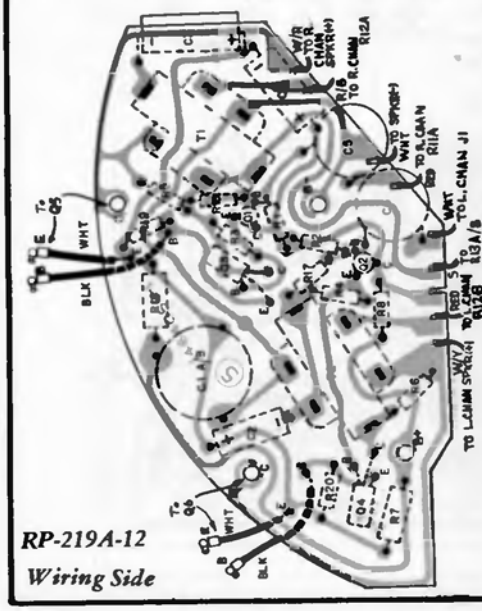

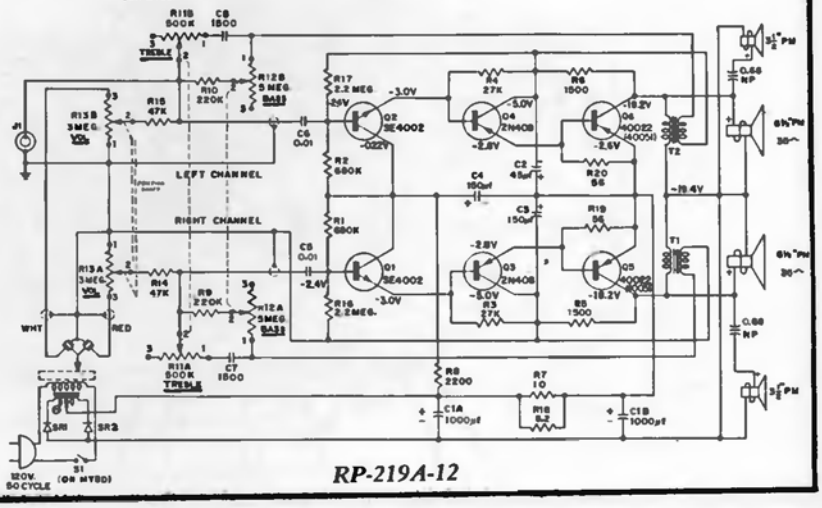

RP-219A-12

RCA VICTOR

Models RFG 20A, H, V, use Chassis RC-1219A,B
Models RFG 25B, E, use Chassis RC-1219B

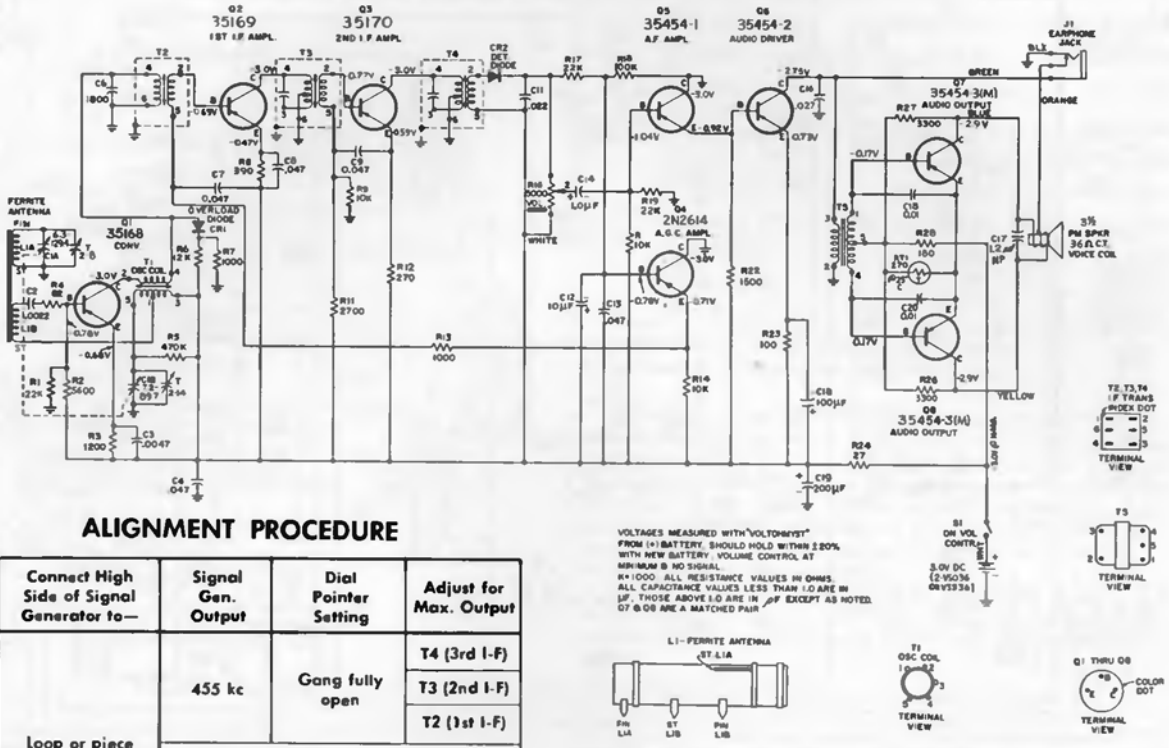

ALIGNMENT PROCEDURE

Step	Connect High Side of Signal Generator to—	Signal Gen. Output	Dial Pointer Setting	Adjust for Max. Output
1	Loop or piece of short wire placed near antenna for radioted signal	455 kc	Gang fully open	T4 (3rd I-F)
2				T3 (2nd I-F)
3				T2 (1st I-F)
4		Repeat Steps 1, 2, and 3		
5		1620 kc	Gang fully open	Oscillator trimmer C1B-T
6		1400 kc	1400 kc (rock gang if necessary)	Antenna trimmer C1A-T
7		600 kc	600 kc (rock gang)	Osc. coil T1
8		Repeat Steps 5, 6, and 7		

USE PROPER ALIGNMENT TOOL FOR MAKING ADJUSTMENTS. CORES ARE EASILY BROKEN BY IMPROPER HANDLING, MAKING NECESSARY REPLACEMENT OF ENTIRE COIL.

CHASSIS REMOVAL

1. Remove tuning and volume knobs.
2. Open case as explained under "Battery Replacement."
3. Remove three screws securing chassis. (Two at battery end of board and one at speaker end.)
4. Remove nut holding earphone jack (RC-1219B) or slide earphone jack out of slot (RC-1219A).
5. Unsolder speaker wires if necessary (or remove clips holding speaker to case).
6. Unsolder battery wires if necessary.
7. Lift board out of case.

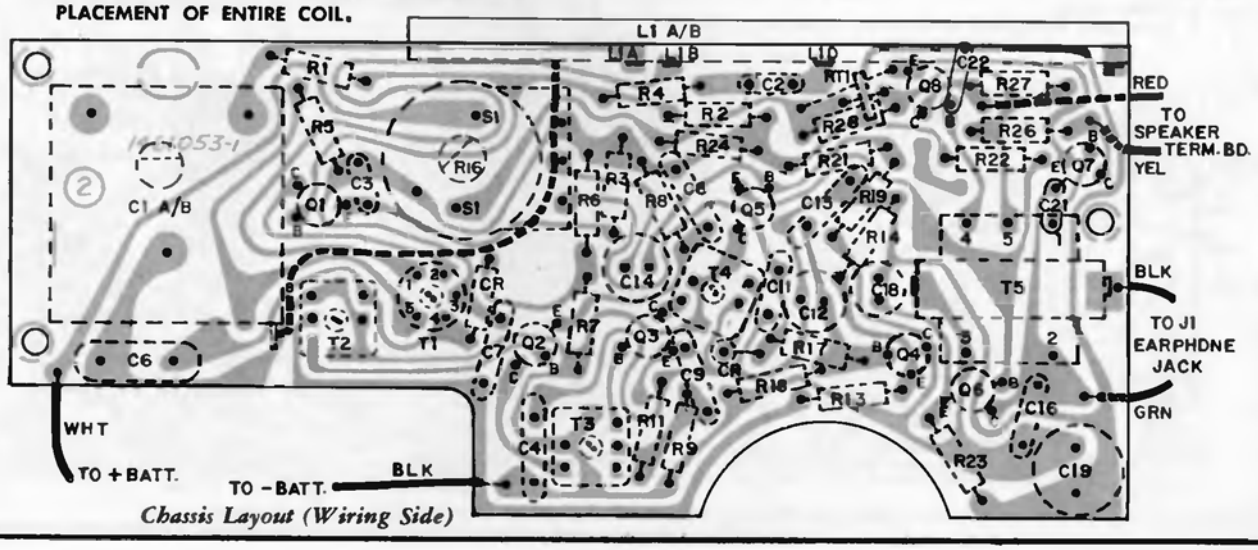

Chassis Layout (Wiring Side)

RCA VICTOR

Model VFP 65E

Chassis RS-206A

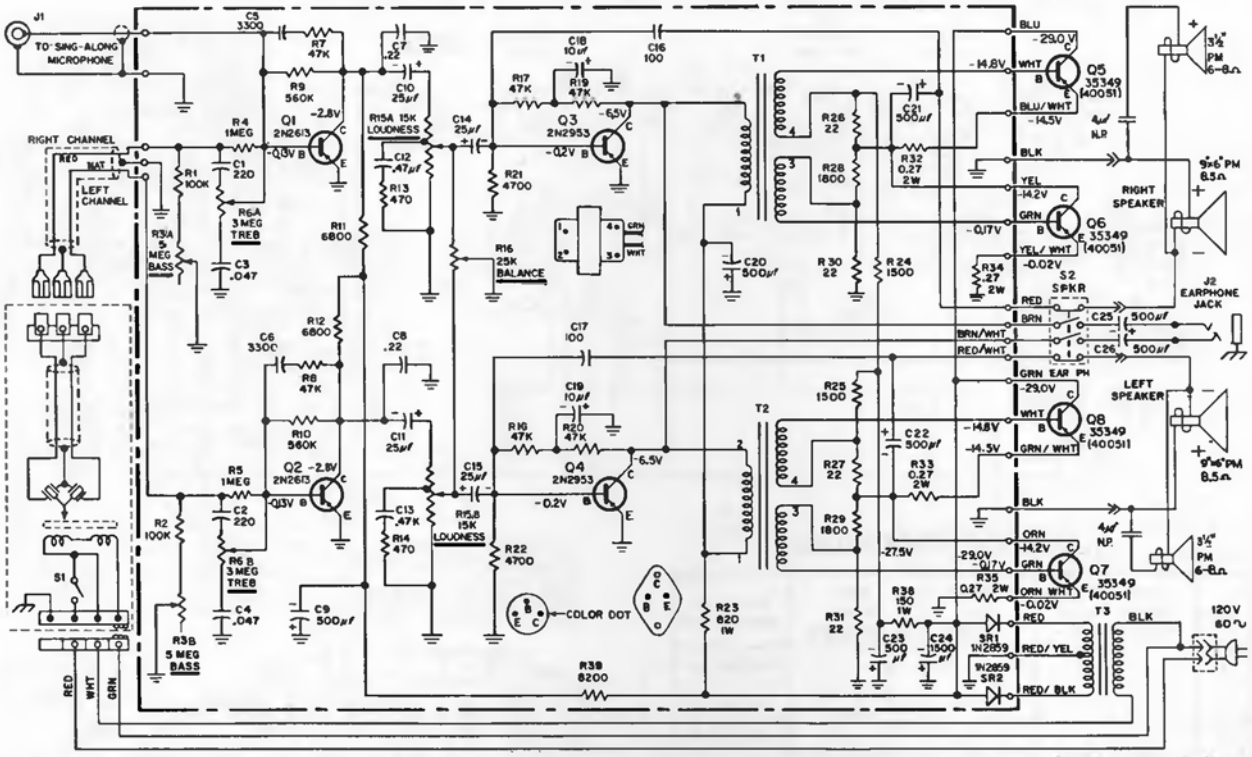

All capacitance values below 1.0 are in μf. Those 1.0 and above are in $pf(\mu\mu f)$, unless otherwise noted.

ACCESS TO CHASSIS

The chassis is accessible through the small panel on the rear of the instrument.

1. Remove power cord.
2. Remove three (3) painted screws holding small access panel on rear of instrument.
3. Swing panel down and to right on its pivot. DO NOT ATTEMPT TO REMOVE PANEL.

CHASSIS REMOVAL

The top of the record changer compartment comprises the complete chassis. It rests on and is secured to a ledge at the front and is held by screws at the rear. The recommended procedure for its removal is as follows:

1. Remove knobs.
2. Open small access panel as described in "Access to Chassis."
3. Position two (2) holes in access panel over screws holding power cord interlock.
4. Remove two (2) *machine screws* holding interlock.
5. Pull record changer drawer down.

If it is not desired to remove chassis completely, omit Steps 6 and 7.

6. Unscrew two (2) bolts securing record changer in drawer. (Lift mat of turntable and reach bolts through access holes in turntable, one at front and one at rear.) DO NOT ATTEMPT TO REMOVE RECORD CHANGER DRAWER.
7. Lift up changer and disconnect cables.
8. Remove four (4) *plated screws* holding front of chassis to horizontal ledge located inside of compartment at front of top.
9. Remove wires, running down each back corner of compartment, from holding clips.
10. Remove four (4) *painted screws* holding rear of chassis to rear of instrument—just below the access panel. (Hold chassis—top of compartment—to prevent its falling.)
11. Chassis may then be lowered and removed.
12. Disconnect speaker cables from transformers and lift chassis out of case.

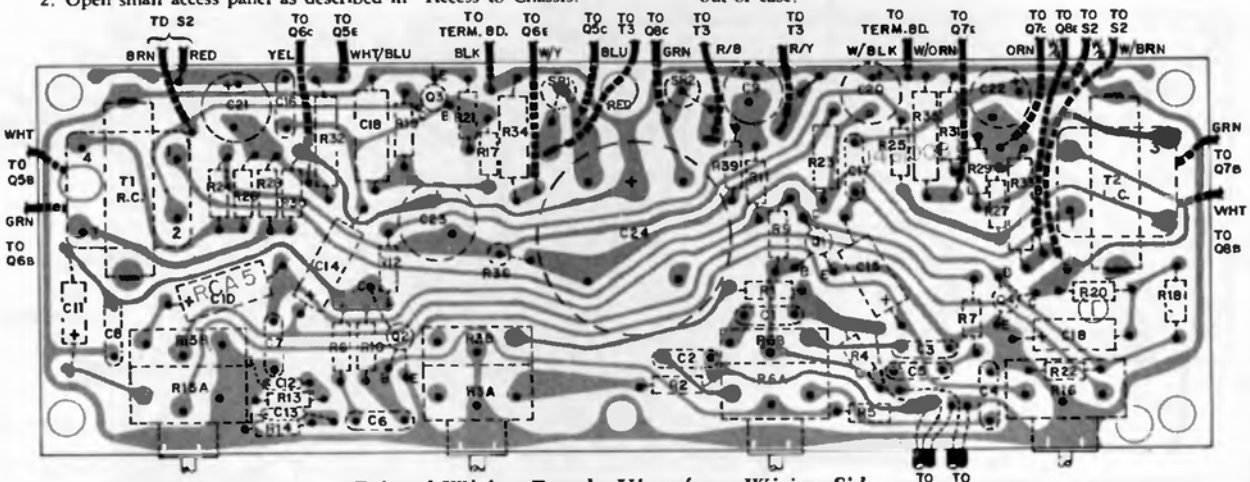

Printed Wiring Board—View from Wiring Side

RCA VICTOR

(Material on pages 133 through 135)

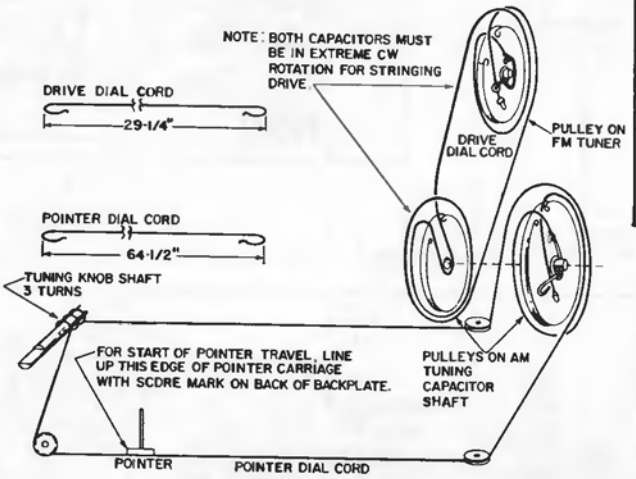

Dial Cord Arrangement

Model Series	Tuner Chassis	Amplifier Chassis
VFR05M	RC-1215D	RS-203C
VFR05W	RC-1215D	RS-203C
VFR19M	RC-1215D	RS-203C
VFR25L	RC-1215D	RS-203C
VFT05M	RC-1215E	RS-203C
VFT05W	RC-1215E	RS-203C
VFT10E	RC-1215E	RS-203C
VFT19M	RC-1215E	RS-203C
VFT22W, VFT25L	RC-1215E	RS-203C

Tuner Chassis RC-1215D is an AM/FM Iuner (No Stereo)
Tuner Chassis RC-1215E is an AM/FM/FM-Stereo tuner

All instruments are self-contained combination Radio/"Victrola" consoles designed to provide in-the-cabinet stereophonic reproduction. Models in the VFT 0, 1, and 2 series contain an AM/FM/FM-Stereo tuner, a stereophonic record changer, a dual channel audio amplifier, and two complete speaker systems. The VFR 0, 1, and 2 series instruments do not incorporate FM-Stereo or the stereo indicator light, but in all other respects are identical to the VFT 0, 1, and 2 series combination consoles.

Tape injut jacks are provided in all instruments as well as a terminal block for the connection of external speakers. When used, external speakers are connected in parallel with the internal speaker system.

PB300 LAYOUT

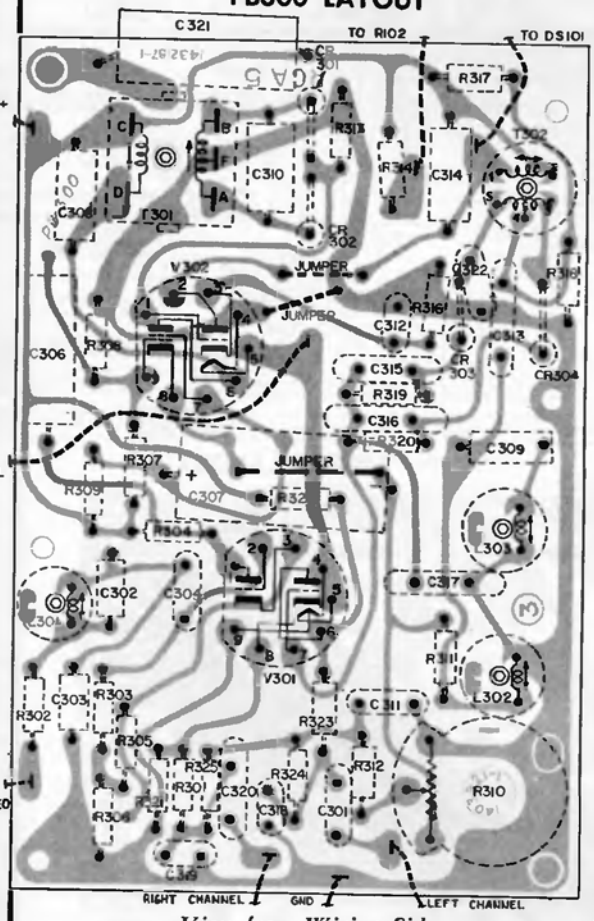

View from Wiring Side

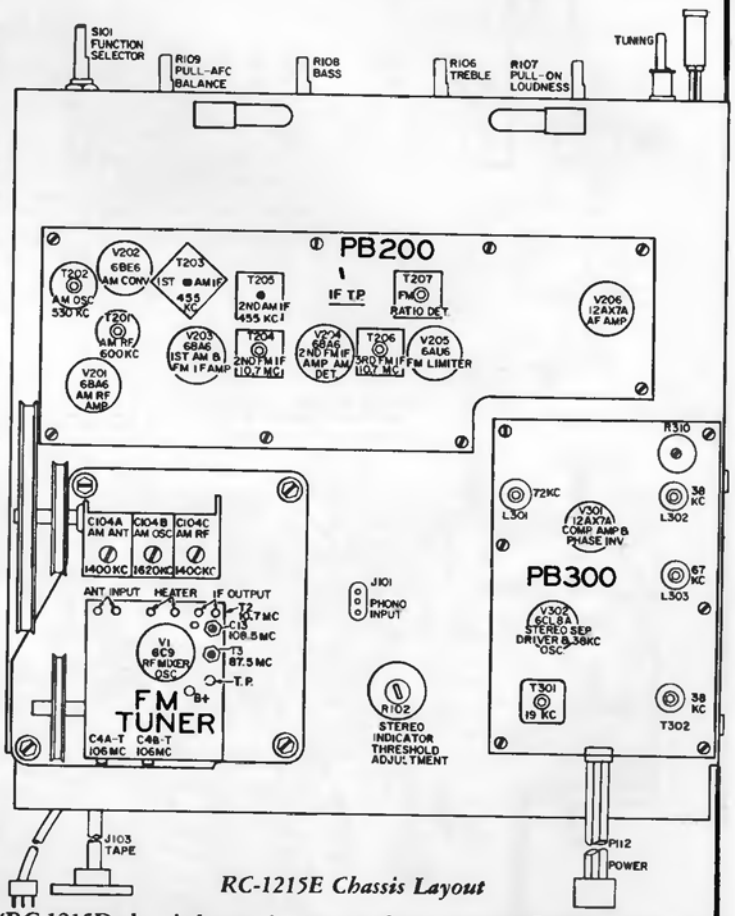

RC-1215E Chassis Layout

(RC-1215D chassis layout is same as above except PB300 is omitted)

RCA Victor Tuner Chassis RC-1215D, E, Amplifier Chassis RS-203C, Continued

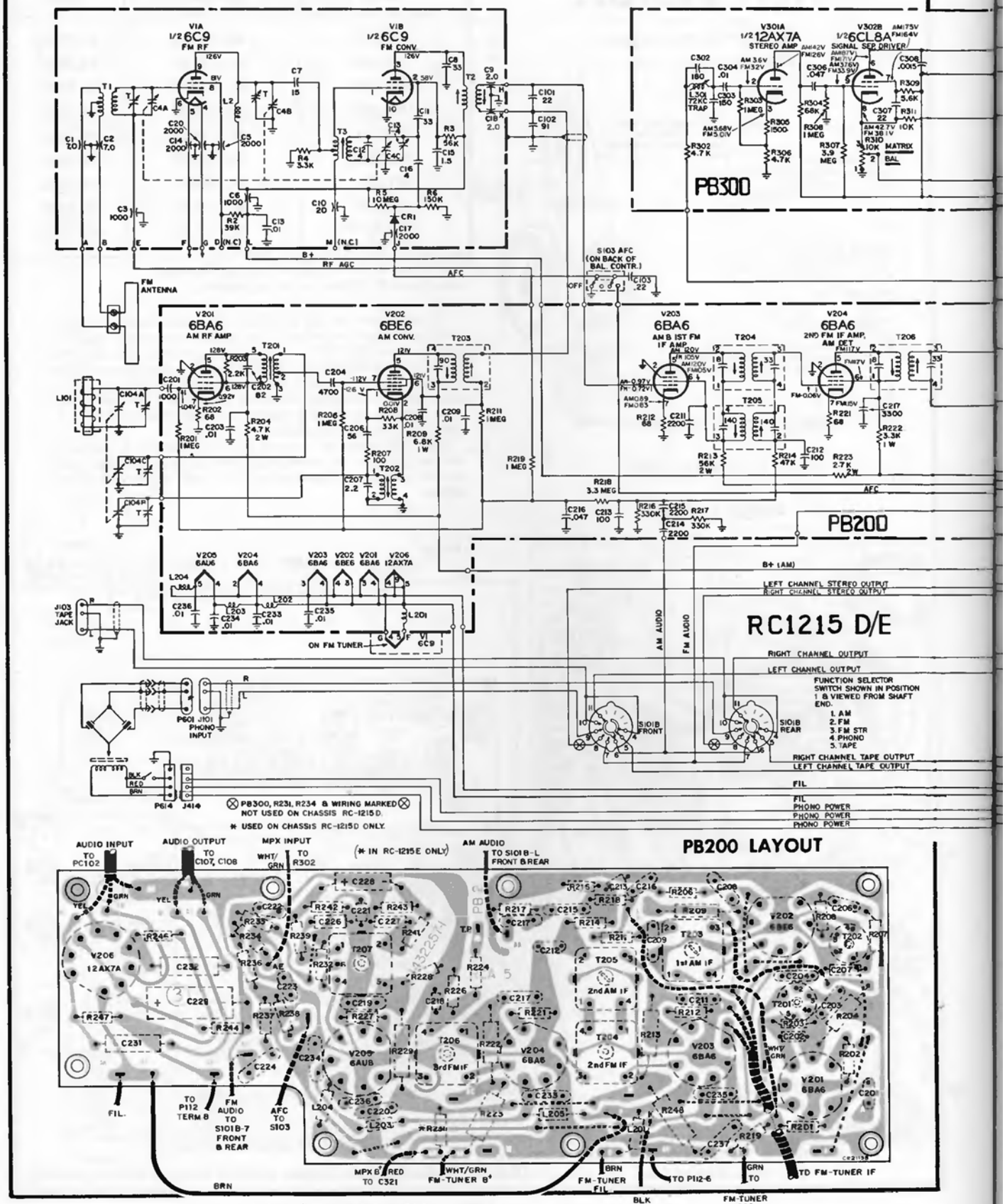

View from Wiring Side

RCA Victor Tuner Chassis RC-1215D, E, Amplifier Chassis RS-203C, Continued

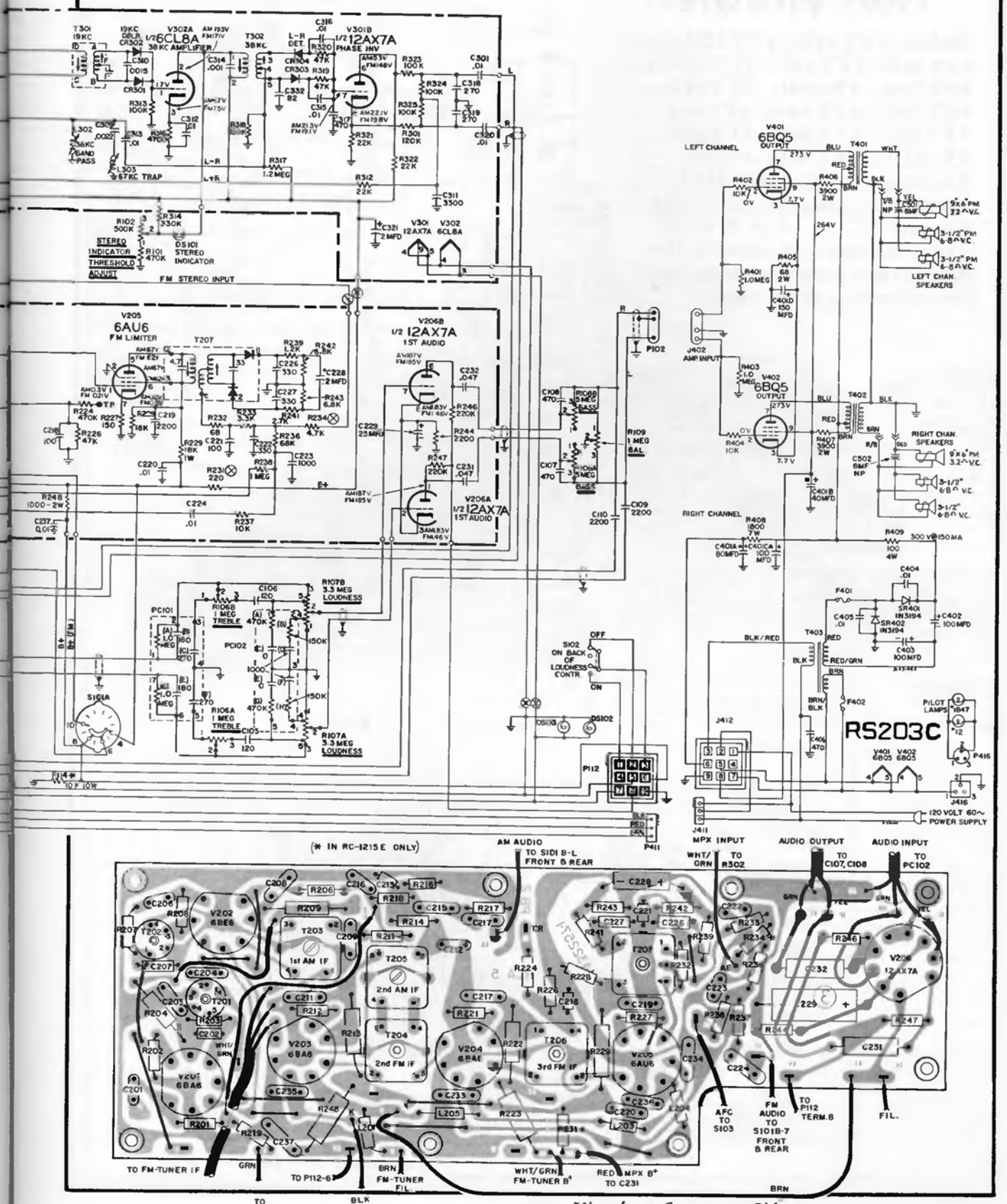

 View from Component Side

RCA VICTOR

Models VFT 44W, VFT 52M, VFT 54L, VFT 56C, VFT 65W, VFT 72W, VFT 74L, VFT 74Z, VFT 76W, VFT 82M, VFT 82V, VFT 83F, VFT 83V, VFT 84E, VFT85W, VFT 86L, employ Amplifier Chassis RS-210A covered on this page, and Tuner Chassis RC-1215J or K which are practically identical to the RC-1215E chassis covered on the preceding three pages.

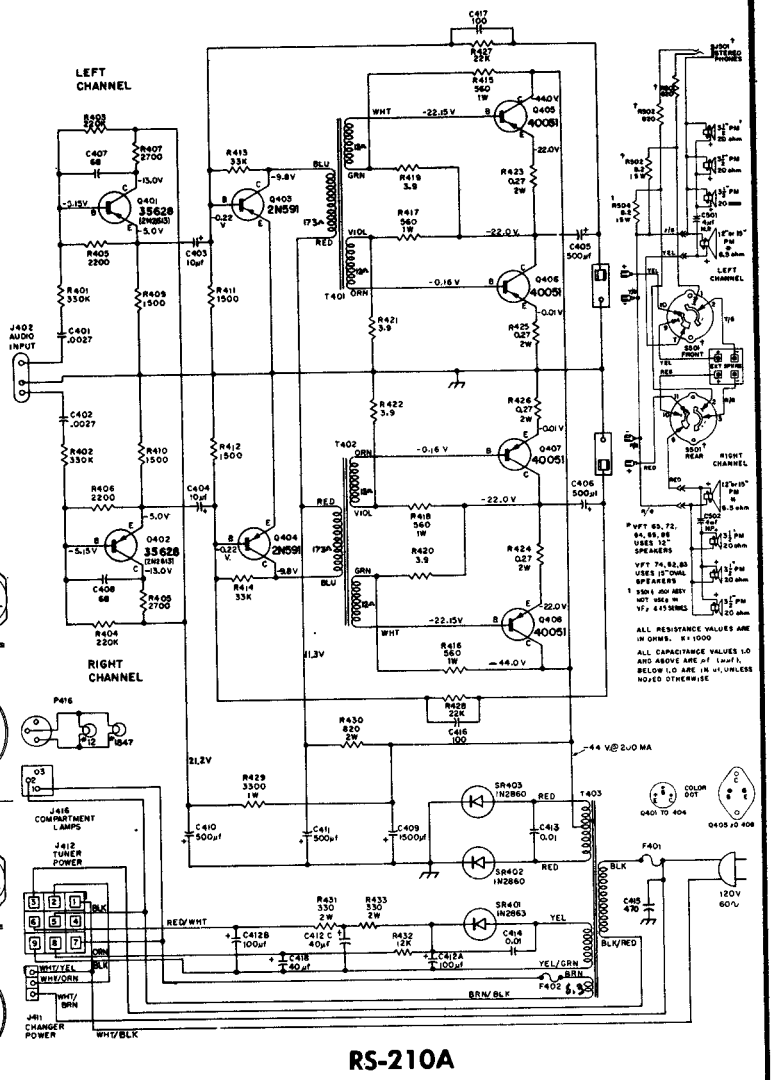

RS-210A

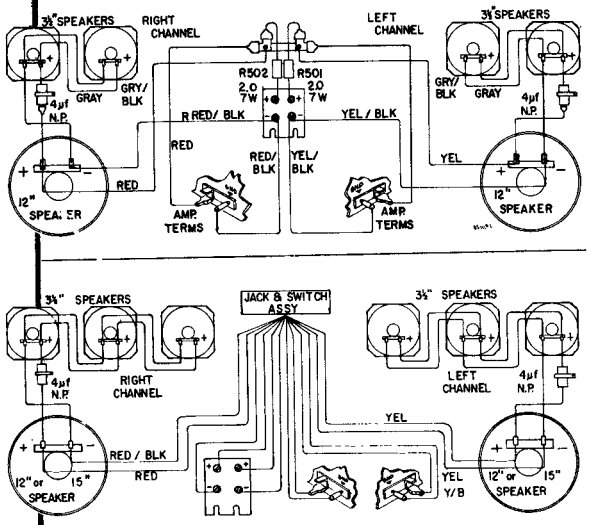

Speaker Wiring

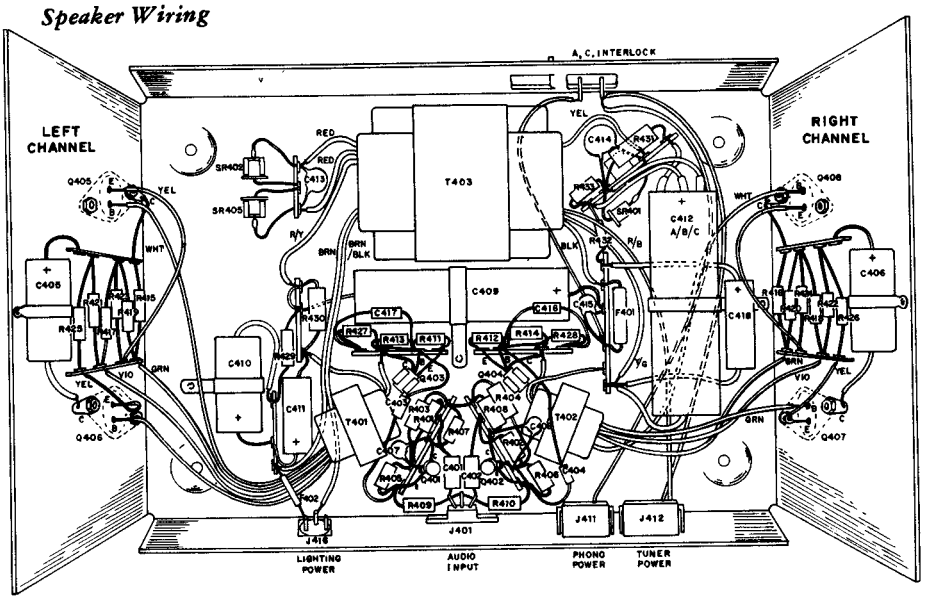

RS-210A Chassis Layout

RCA VICTOR

Models VFT 26W, VFT 27L, VFT 28M, VFT 29W, VFT 30W, and VFT 31L, employ Amplifier Chassis RS-212A covered on this page, and Tuner Chassis RC-1215M which is practically identical to RC-1215E chassis covered on preceding pages.

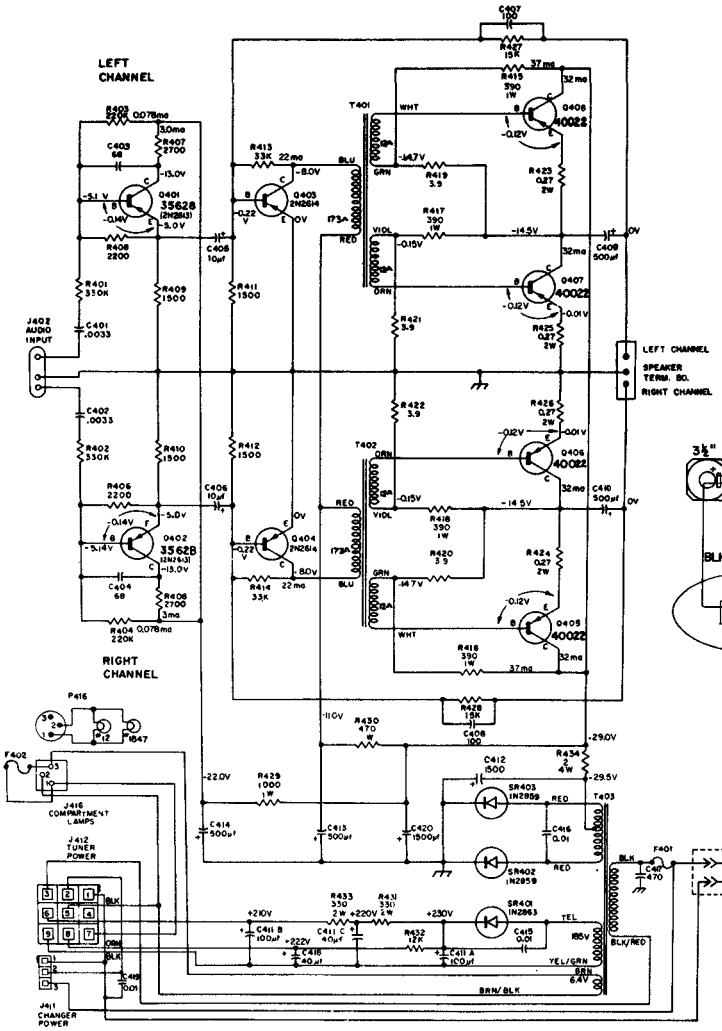

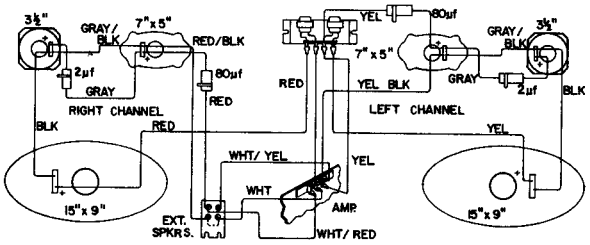

Speaker Wiring—VFT 26, 27, 28

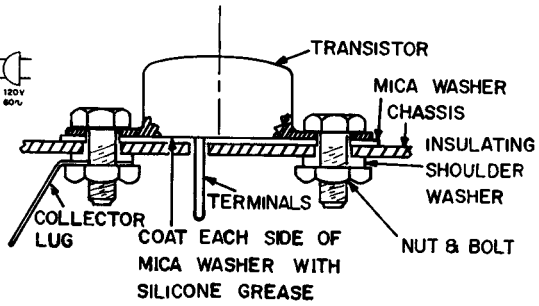

Output Transistor Mounting

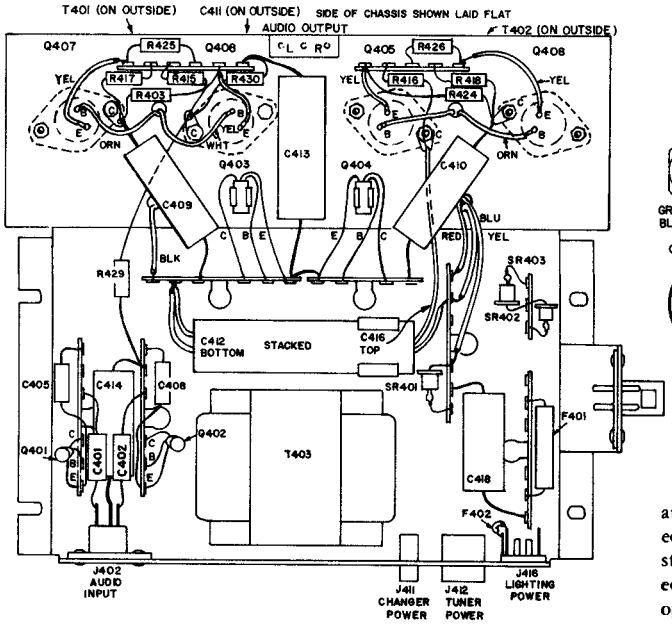

RS 212A Chassis Layout

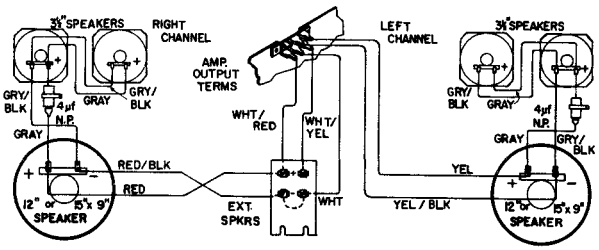

Speaker Wiring—VFT 29, 30, 31

A terminal board is available on the rear of the instrument for the attachment of accessory external speakers (RCA XFK21, 22, 23 or equivalent) should they be desired. A jack is available in the record storage compartment for use of binaral headphones (RCA XFK 11 or equivalent). A switch adjacent to the jack provides for various operating modes of the internal speakers, external speakers (if used) and the headphones.

RCA VICTOR

RGD 24 Series

Chassis RC-1213P

Model RGD 24A—Light Blue

Model RGD 24N—Cream

Model RGD 24Y—Iceberg White

TUBE AND CHASSIS ACCESSIBILITY

1. DO NOT ATTEMPT TO REMOVE THE KNOBS. The tuning and volume control knobs are held captive to the cabinet by retainers on their shafts.
2. Remove the back cover by lifting the protrusions on the bottom of the back cover, out of the slots in the base of the cabinet.
3. Unsolder speaker leads if necessary. Avoid putting a strain on the speaker leads.
4. Remove two chassis retainers (screws or clips), one at the volume control and one on the left end mounting.
5. Grasp tuning capacitor and volume control, and pull chassis out of knobs and mounting slots.

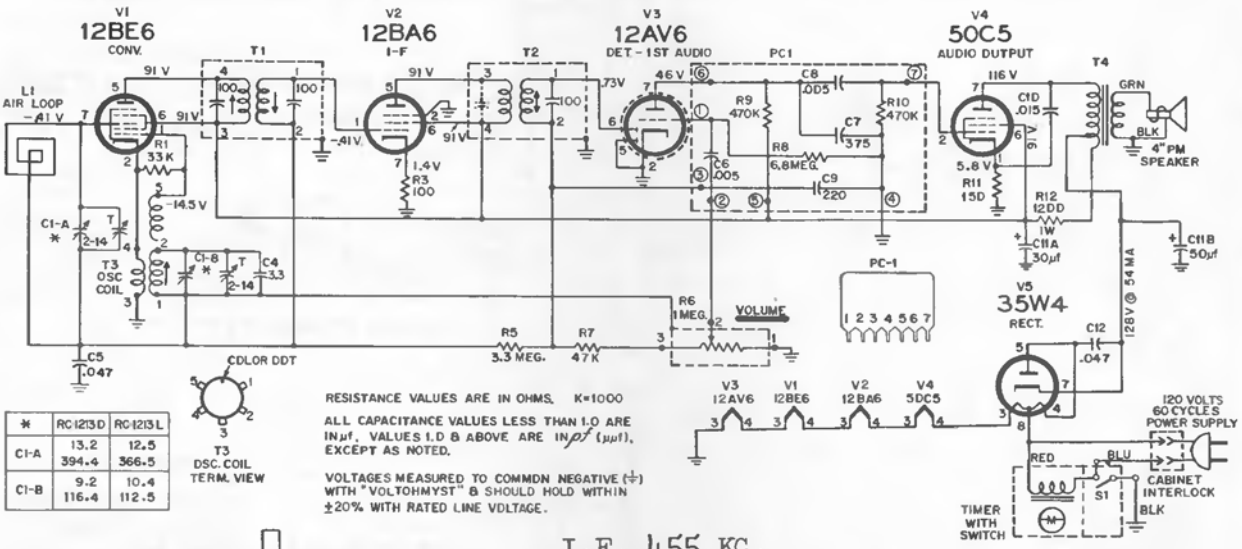

*	RC-1213D	RC-1213L
C1-A	13.2 394.4	12.5 366.5
C1-B	9.2 116.4	10.4 112.5

RESISTANCE VALUES ARE IN OHMS. K=1000

ALL CAPACITANCE VALUES LESS THAN 1.0 ARE IN μf, VALUES 1.0 & ABOVE ARE IN μμf (μμf), EXCEPT AS NOTED.

VOLTAGES MEASURED TO COMMON NEGATIVE (⏚) WITH "VOLTOHMYST" & SHOULD HOLD WITHIN ±20% WITH RATED LINE VOLTAGE.

I.F. 455 KC.

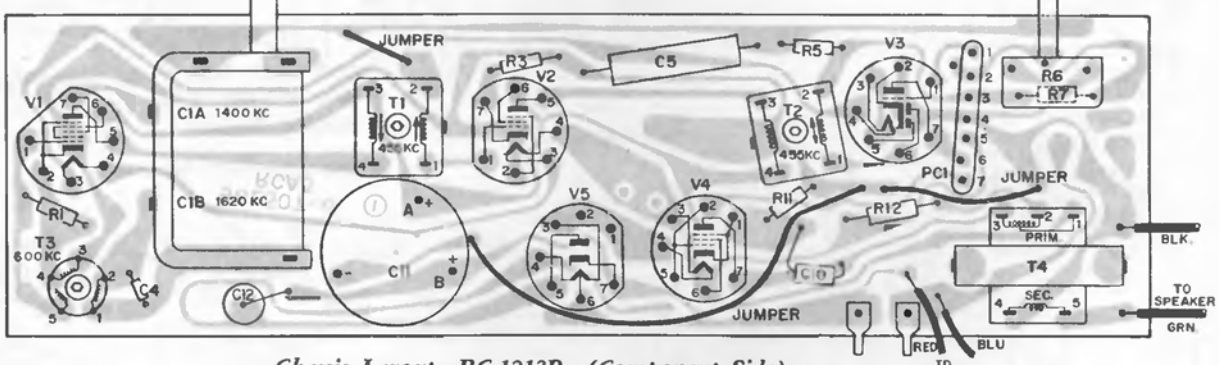

Chassis Layout—RC-1213P (Component Side)

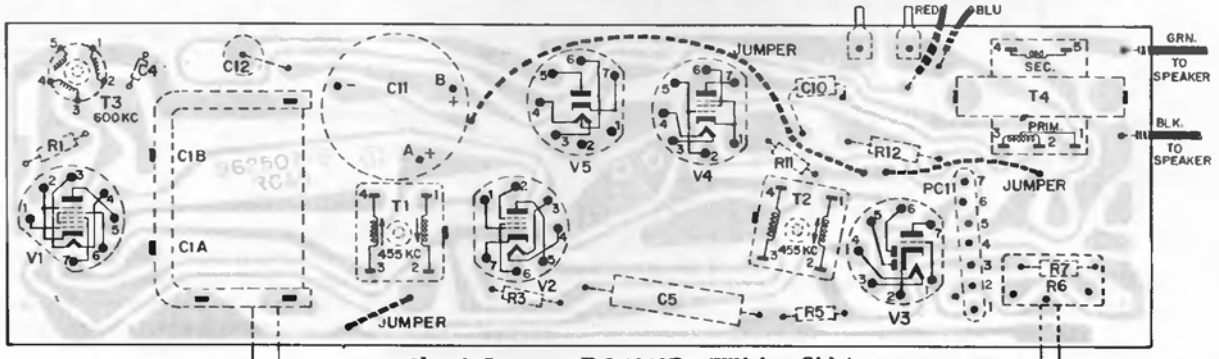

Chassis Layout—RC-1213P (Wiring Side)

Silvertone

SEARS, ROEBUCK AND CO.

Chassis 132.83601, Models 5008, 5009

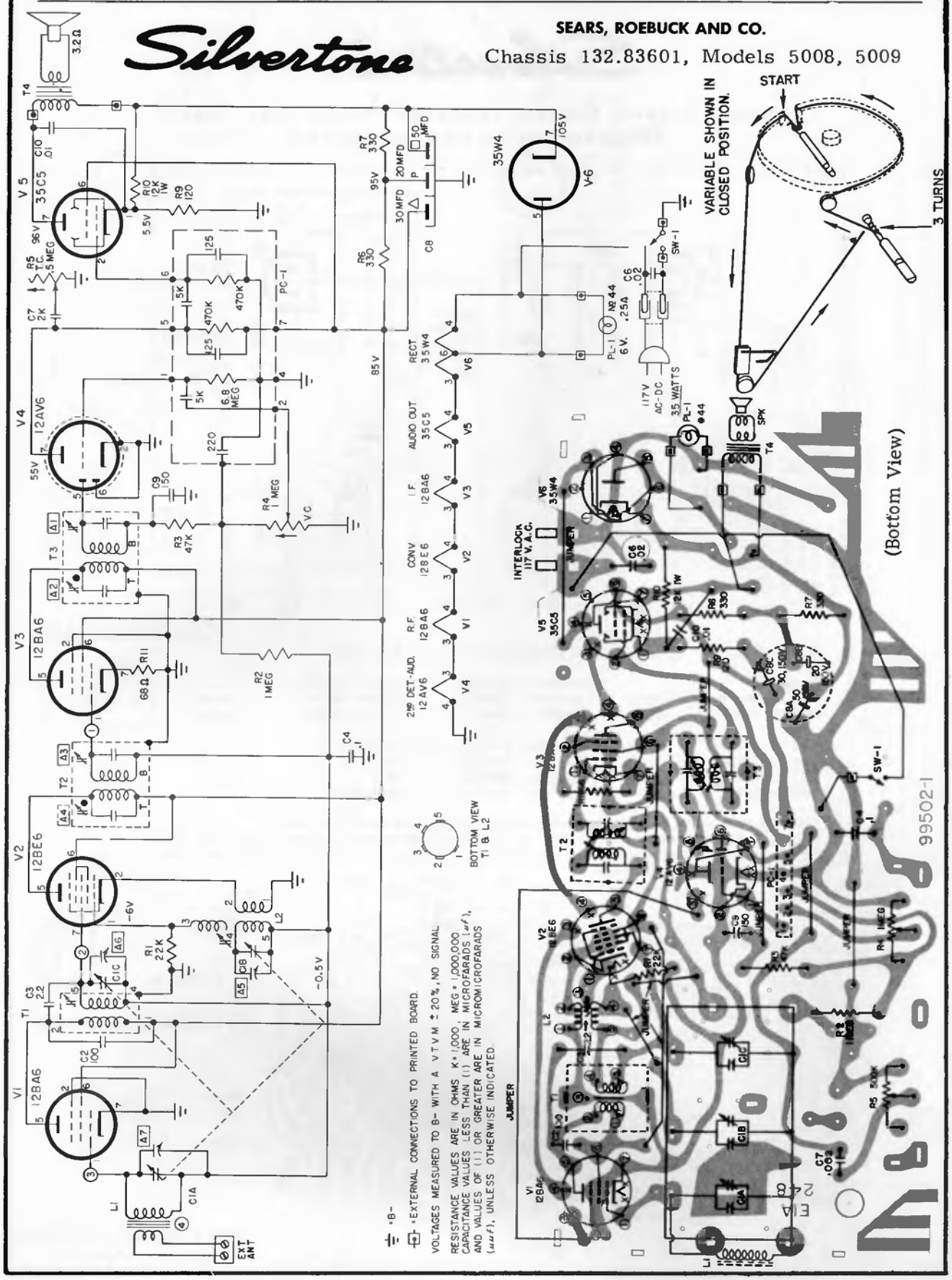

Silvertone

Sears, Roebuck Chassis 132.84101, Models 5045, 5046
(Diagram and top view on page 141)

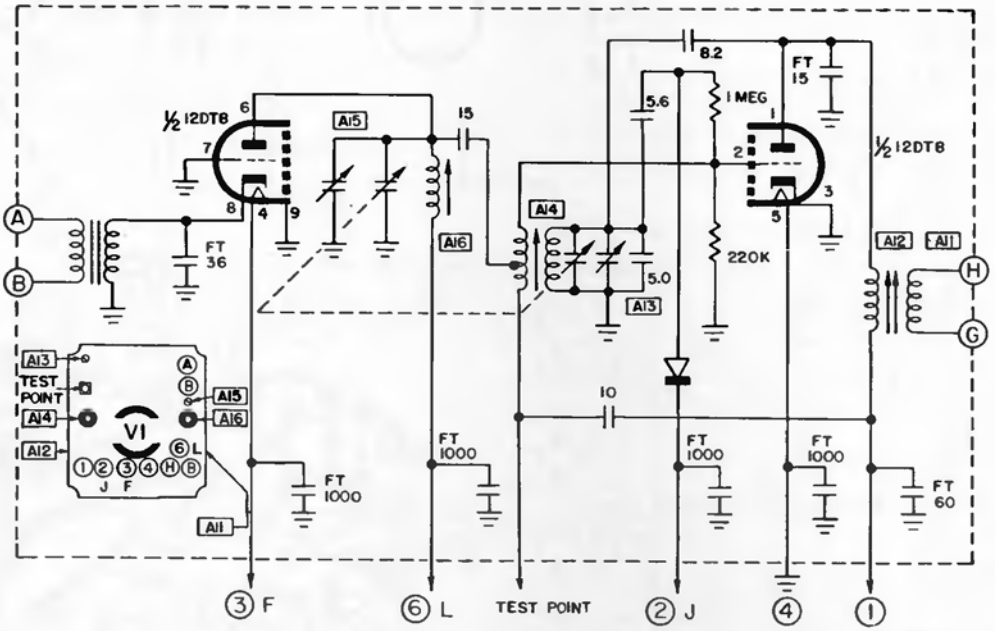

TUNER SCHEMATIC

AM ALIGNMENT PROCEDURE

Position of Variable	Generator Frequency	Dummy Antenna	Generator Connection (high)	Generator Connection Ground Lead	Adjust Trimmer in Order Shown for Max. Output	Trimmer Function
Open	455 Kc	.05 mfd.	Pin 7, 12BE6	B-through .1 mfd	A1, 2, 3, 4	I.F.
Open	1640 Kc		*Test Loop	Test Loop	A5	Oscillator
1400 Kc	1400 Kc		*Test Loop	Test Loop	A6	Antenna
**600 Kc	600 Kc		*Test Loop	Test Loop	Check Point	

*Three (3) turns of wire 6" in diameter placed about one foot from the receiver antenna.
The alignment procedure should be repeated in the original order for greatest accuracy. Always keep the output from the signal generator at its lowest possible value to make the AVC action of the receiver ineffective.
** Check point only - No adjustment.

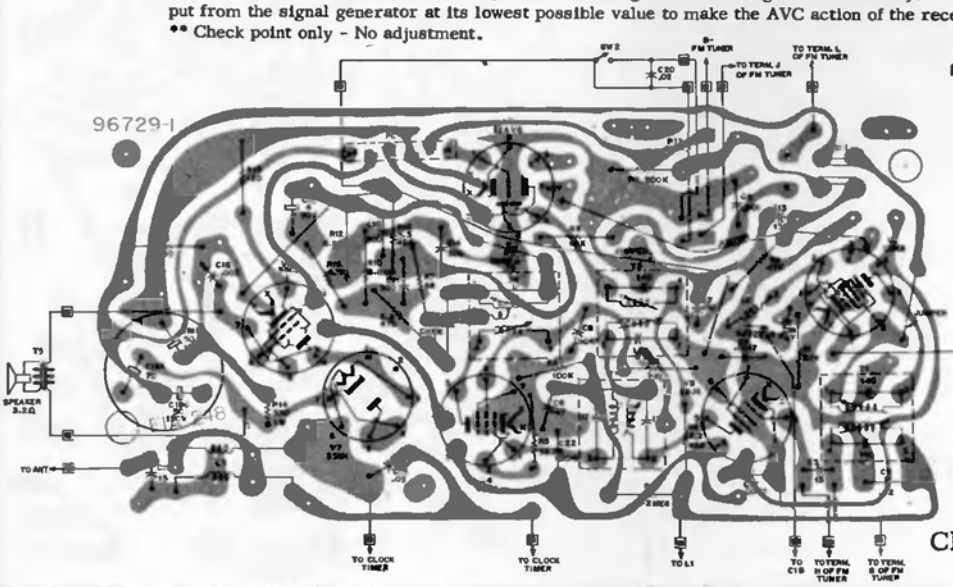

CIRCUIT BOARD DIAGRAM
(Bottom View)

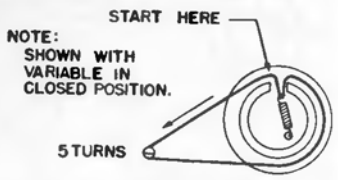

STRINGING DIAGRAM

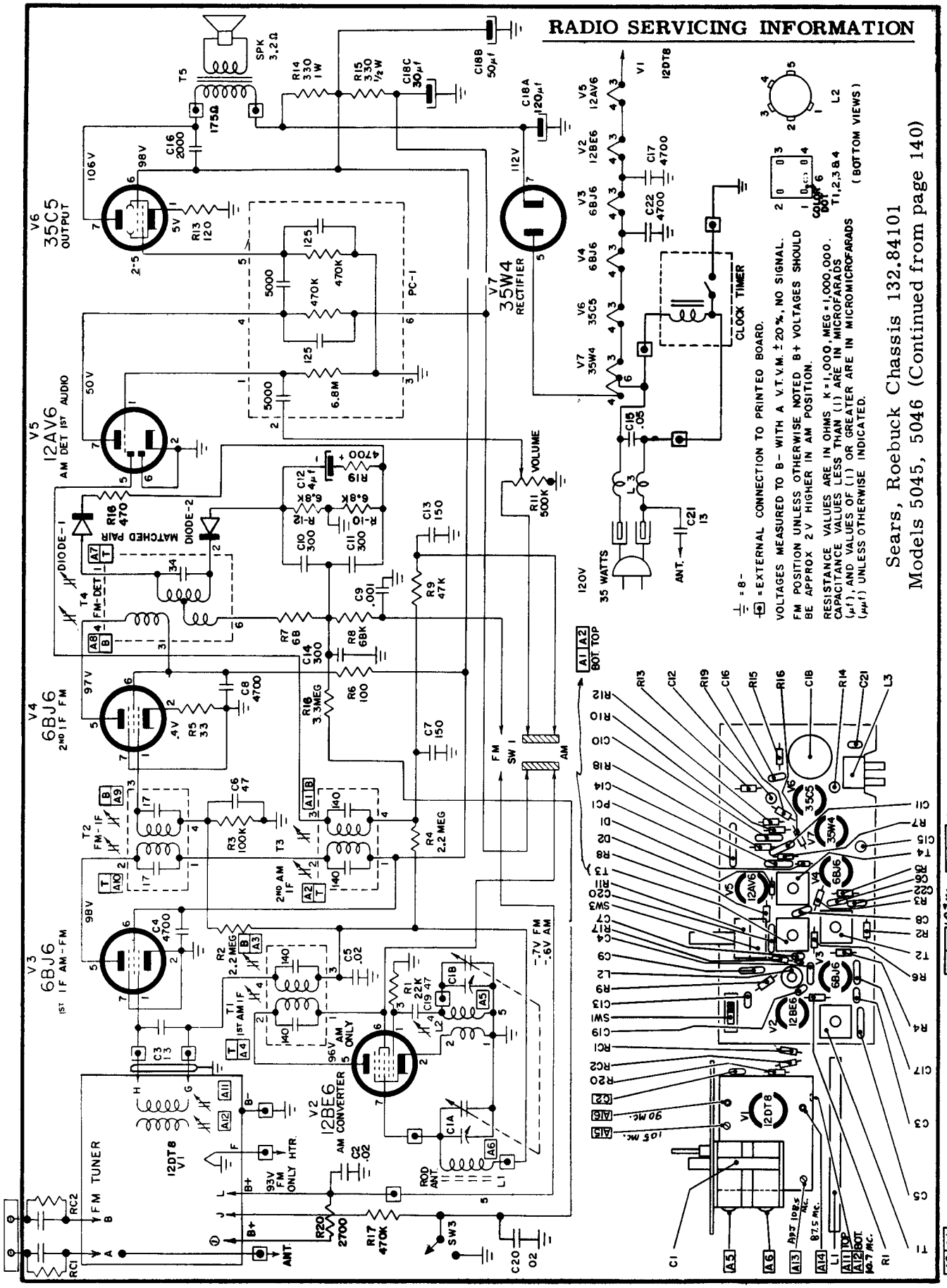
V6 35C5 OUTPUT
V5 12AV6 AM DET 1ST AUDIO
V4 6BJ6 2ND IF FM
V3 6BJ6 1ST IF AM-FM
V2 12BE6 AM CONVERTER
V1 12DT8
V7 35W4 RECTIFIER
FM TUNER
CLOCK TIMER
VOLUME
SPK 3.2Ω
MATCHED PAIR
DIODE-1
DIODE-2
PC-1
ROD ANT.
ANT.
35 WATTS
120V
93V FM ONLY HTR.
96V AM ONLY
-.7V FM -6V AM
= EXTERNAL CONNECTION TO PRINTED BOARD.
VOLTAGES MEASURED TO B- WITH A V.T.V.M. ± 20%, NO SIGNAL.
FM POSITION UNLESS OTHERWISE NOTED B+ VOLTAGES SHOULD BE APPROX 2V HIGHER IN AM POSITION.
RESISTANCE VALUES ARE IN OHMS K=1,000, MEG=1,000,000.
CAPACITANCE VALUES LESS THAN (1) ARE IN MICROFARADS (μf), AND VALUES OF (1) OR GREATER ARE IN MICROMICROFARADS (μμf) UNLESS OTHERWISE INDICATED.
(BOTTOM VIEWS)
Sears, Roebuck Chassis 132.84101
Models 5045, 5046 (Continued from page 140)

SEARS | Silvertone CLOCK-RADIO

RADIO CHASSIS NO. 528.63101

MODELS 5036, 5037, 5038, 5039

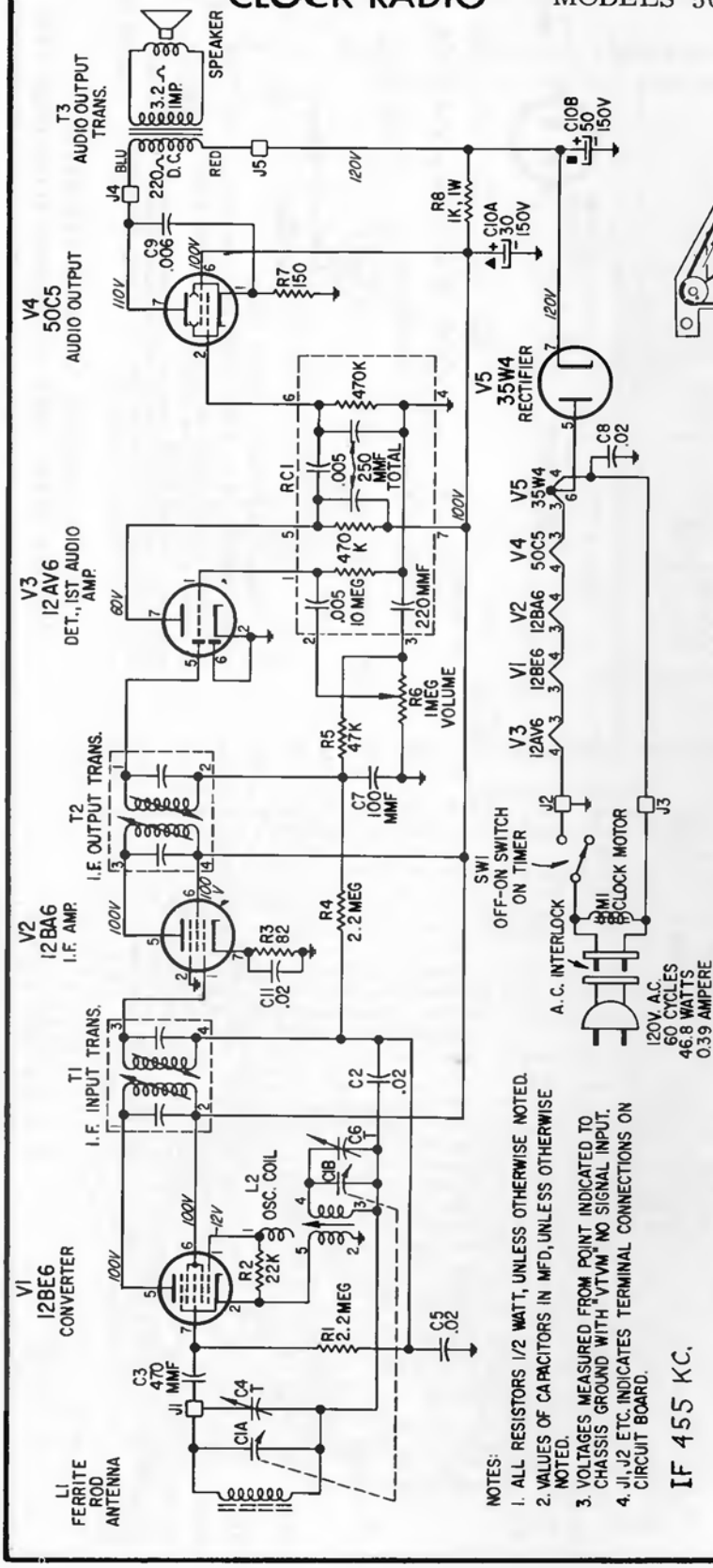

NOTES:
1. ALL RESISTORS 1/2 WATT, UNLESS OTHERWISE NOTED.
2. VALUES OF CAPACITORS IN MFD, UNLESS OTHERWISE NOTED.
3. VOLTAGES MEASURED FROM POINT INDICATED TO CHASSIS GROUND WITH "VTVM" NO SIGNAL INPUT.
4. J1, J2 ETC. INDICATES TERMINAL CONNECTIONS ON CIRCUIT BOARD.

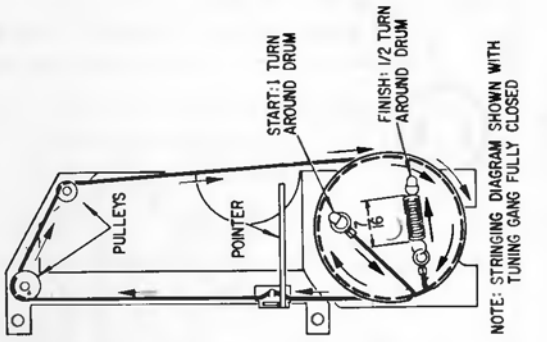

STRINGING DIAGRAM

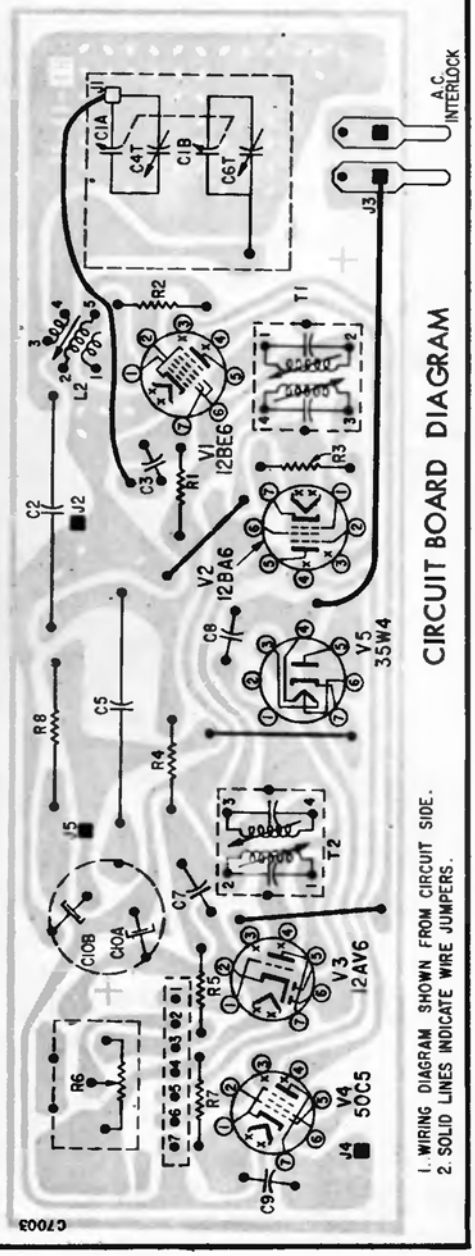

CIRCUIT BOARD DIAGRAM

1. WIRING DIAGRAM SHOWN FROM CIRCUIT SIDE.
2. SOLID LINES INDICATE WIRE JUMPERS.

Sharp

SHARP ELECTRONICS CORP.

MODEL BP-374

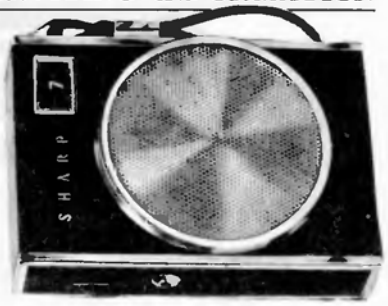

2SA337 2SA12 2SA12 2SB155 2SB155 2SB77 (x2)

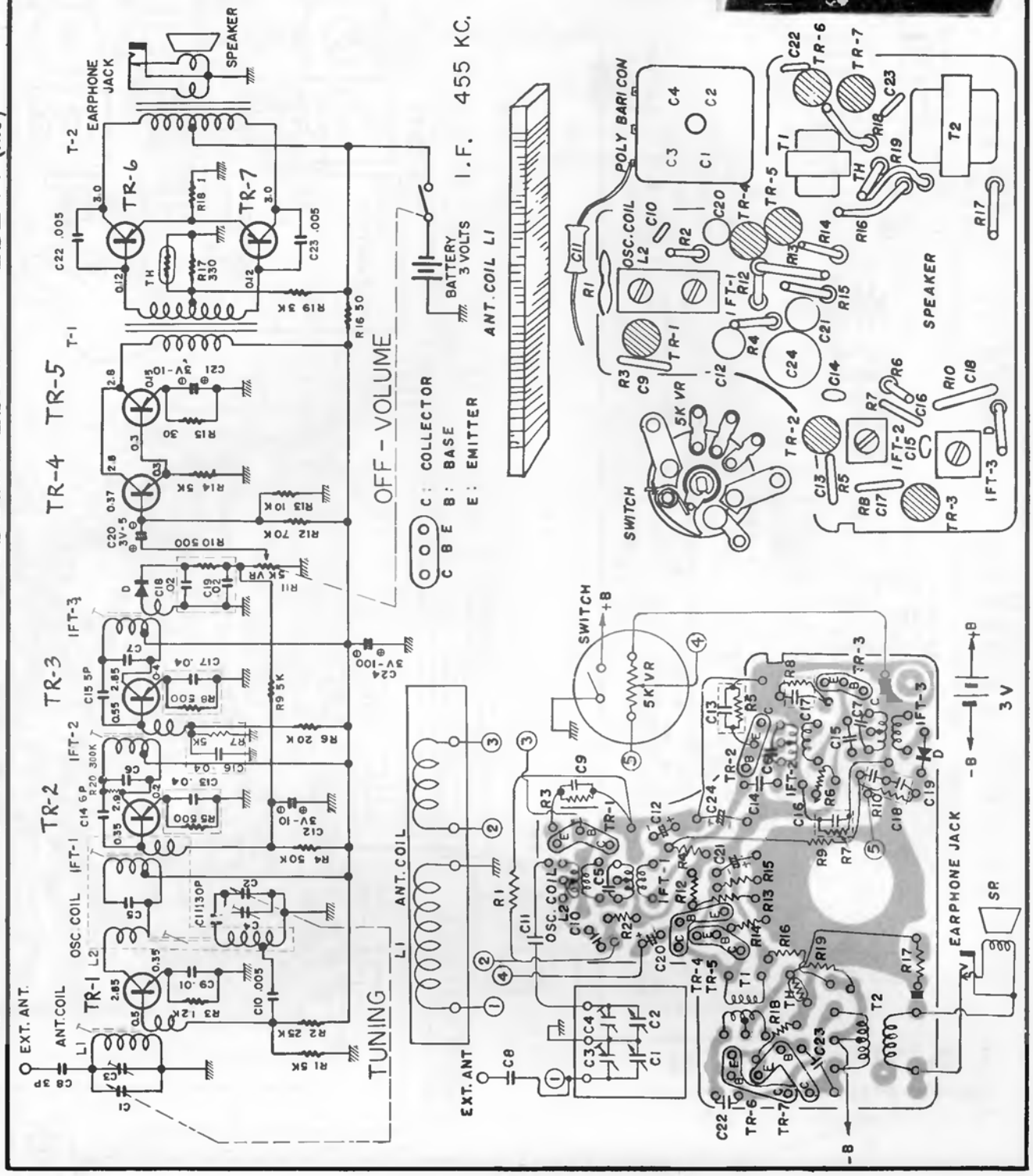

SHARP ELECTRONICS

MODEL BP-460

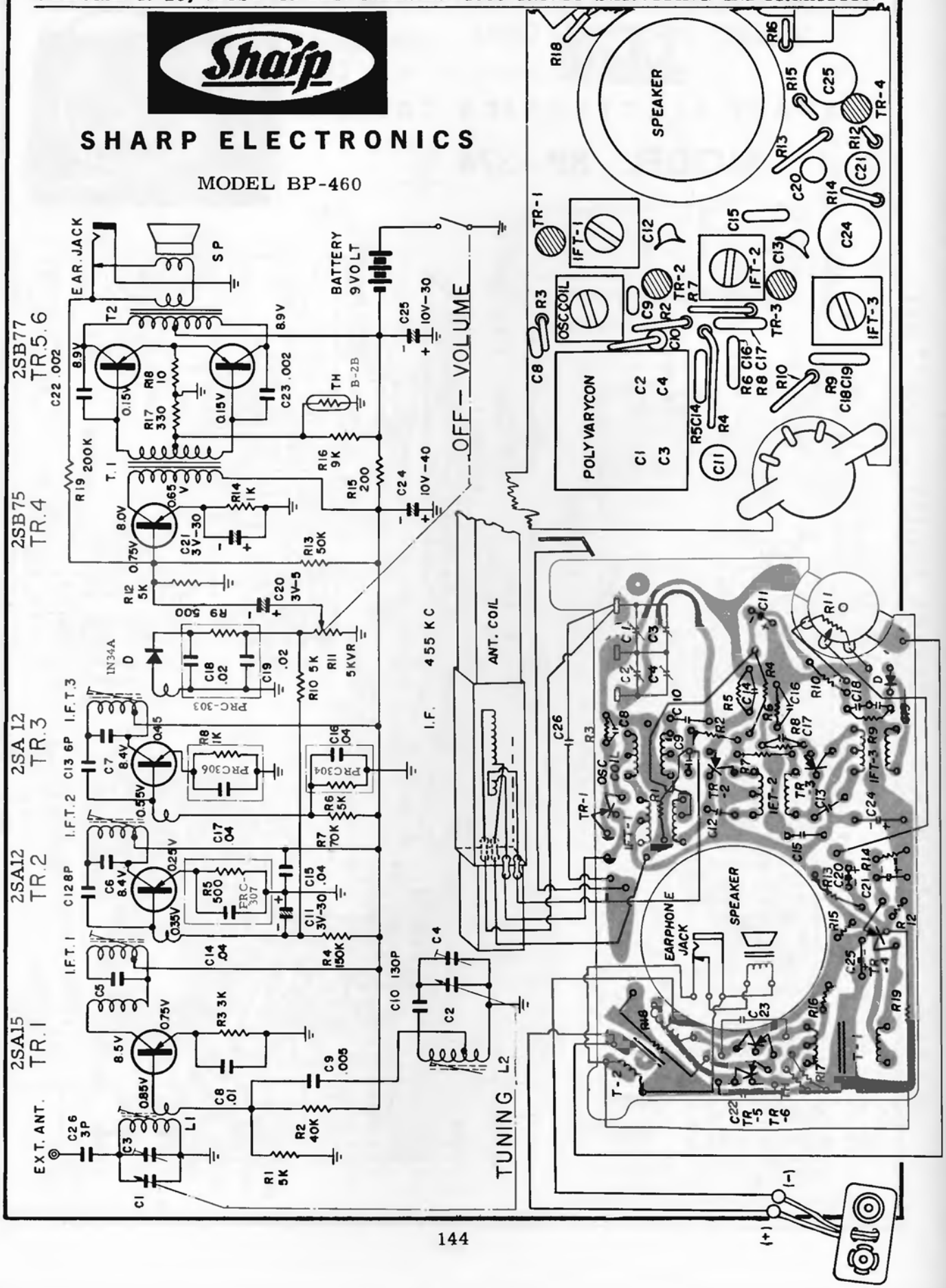

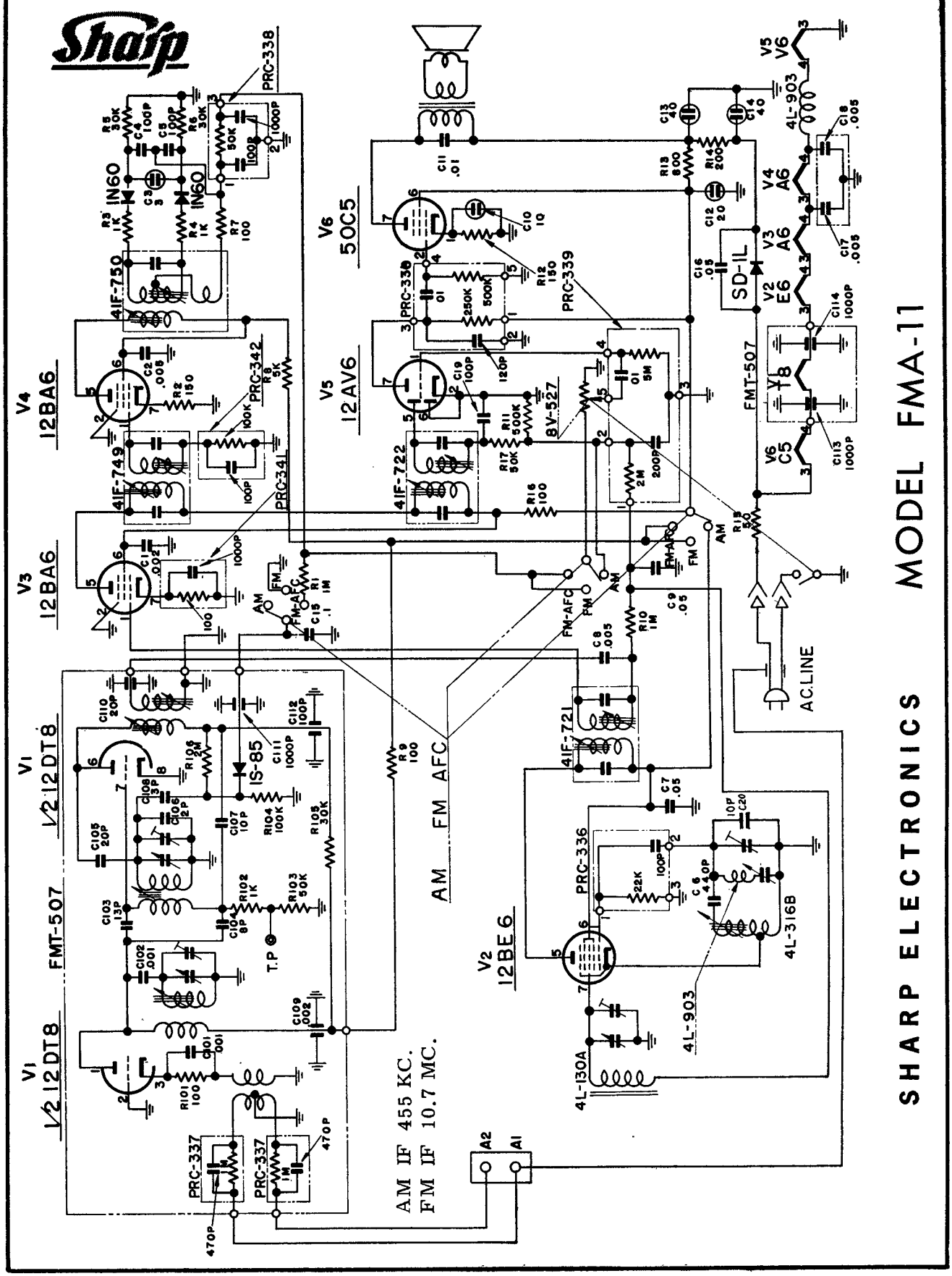
Sharp
SHARP ELECTRONICS
MODEL FMA-11
AM IF 455 KC.
FM IF 10.7 MC.
AM FM AFC
AC.LINE
V1 1/2 12DT8
V2 12BE6
V3 12BA6
V4 12BA6
V5 12AV6
V6 50C5
FMT-507
IS-85
SD-IL
8V-527
4IF-750
4IF-749
4IF-722
4IF-721
4L-130A
4L-316B
4L-903
PRC-338
PRC-339
PRC-342
PRC-341
PRC-336
PRC-337

SHARP ELECTRONICS Model BP-485

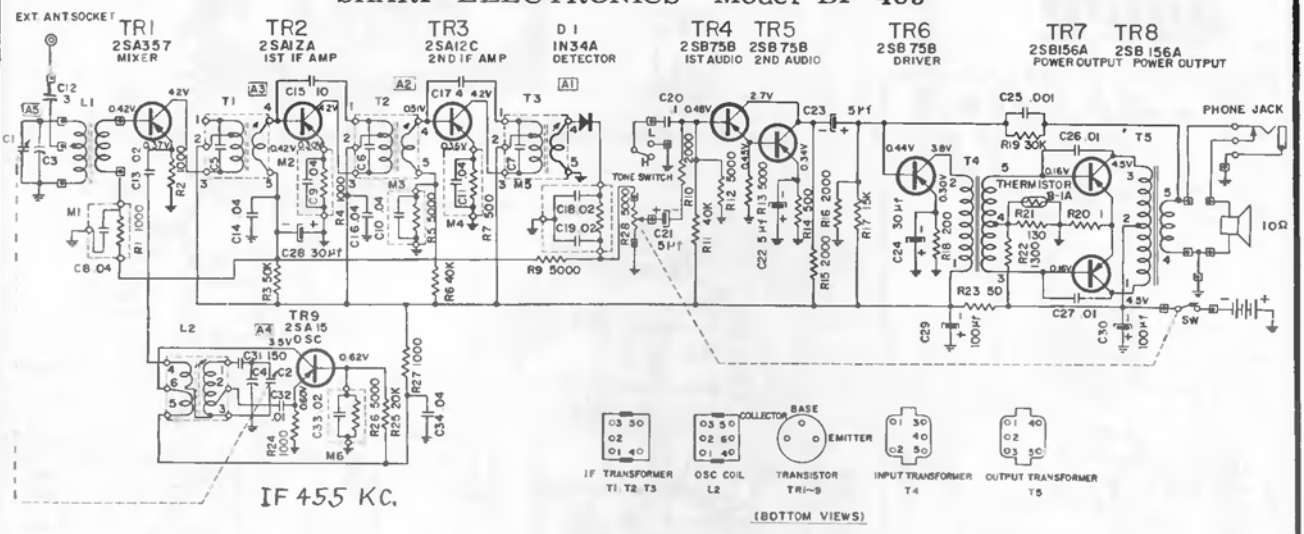

⏚ = COMMON GROUND.
▣ = EXTERNAL CONNECTOR TO PRINTED CIRCUIT BOARD.
RESISTANCE VALUES ARE IN OHMS: K=1000.
CAPACITANCE VALUES LESS THAN 1.0 ARE IN MICROFARADS(μf) AND VALUES GREATER THAN 1.0 ARE IN MICRO-MICROFARADS(μμf) EXCEPT WHERE NOTED.
VOLTAGE READINGS TO COMMON GROUND(⏚) ARE MEASURED WITH VACUUM TUBE VOLTMETER UNDER NO SIGNAL CONDITIONS.
TOTAL BATTERY CURRENT DRAIN UNDER NO SIGNAL CONDITIONS IS 11 TO 100 MA.

M1=C8 .04+R1 1000 (PRC-320), M2=C9 .04+R4 1000 (PRC-306), M3=C10 .04+R5 5000 (PRC-304), M4=C11 .04+R7 500 (PRC-307), M5=C18 C19 .02+R8 500 (PRC-303), M6=C33 .02+R26 5000 (PRC-315)

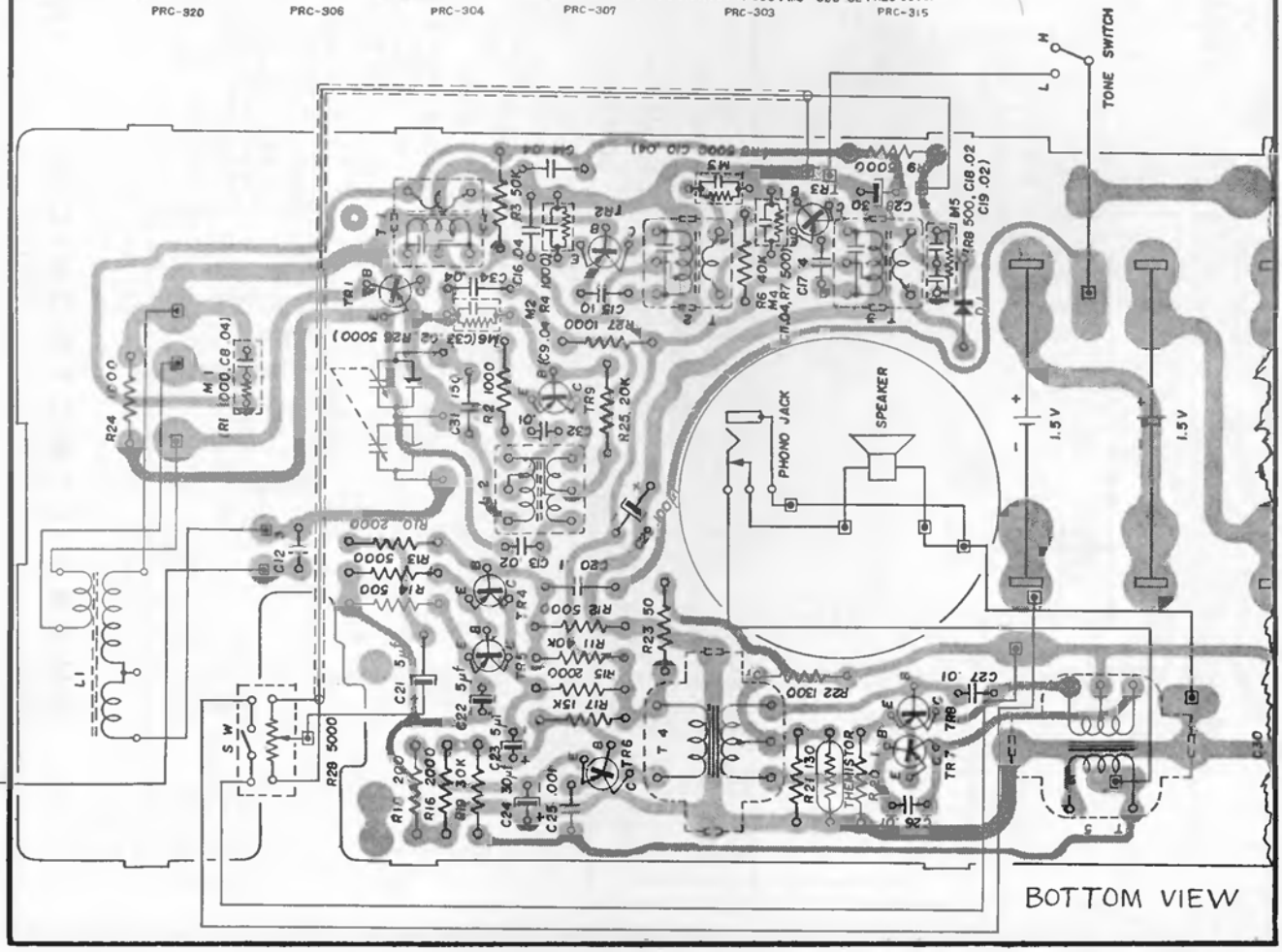

SONY CORPORATION Model TR-8

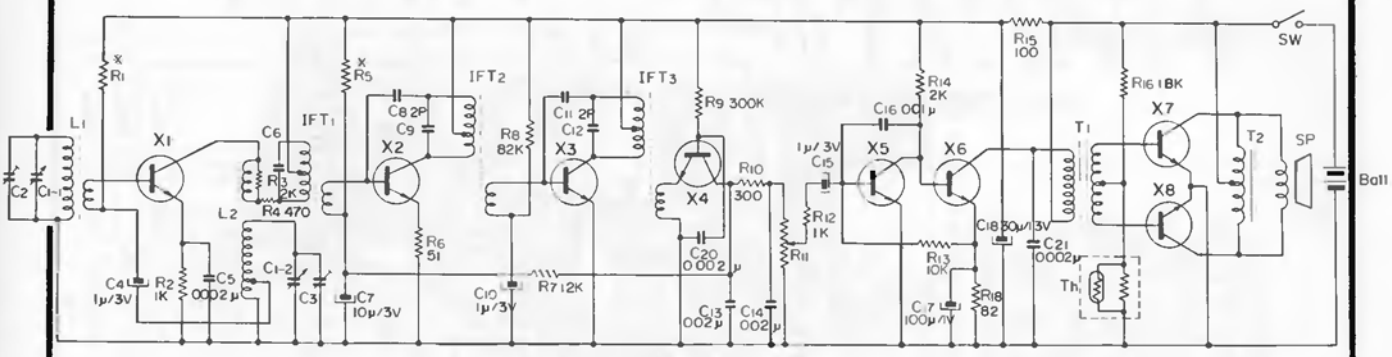

SONY TR-8

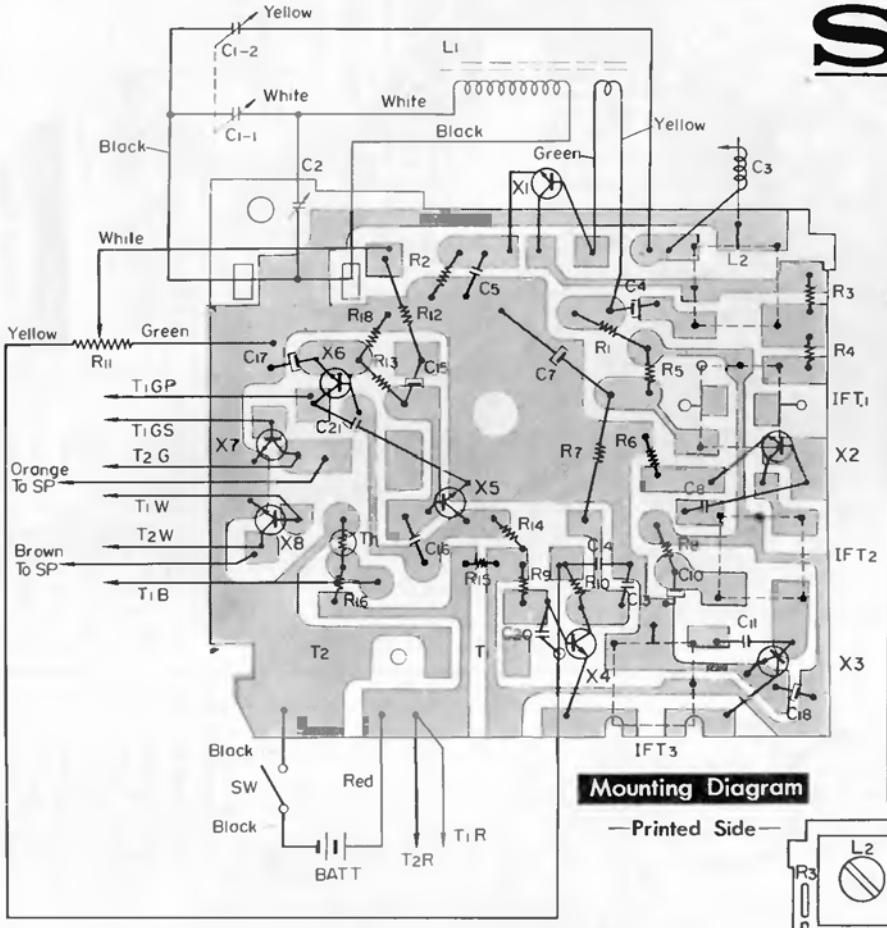

Mounting Diagram

—Printed Side—

Symbol	Description	
L_1	Ferrite Bar Antenna	
L_2	Oscillator Coil	
IFT_1	IF Transformer	
IFT_2	"	
IFT_3	"	
T_1	Driver Transformer	
T_2	Output Choke Coil	
SP	Speaker	
SW	Power Switch (built in VR)	
Batt.	Mercury Battery (2.6 V)	
X_1	Transistor	TX-128
X_2	"	TX-128
X_3	"	TX-128
X_4	"	TX-128
X_5	"	TX-128
X_6	"	TX-128
X_7	"	2SD6
X_8	"	2SD6
Th	Thermistor	CS-120

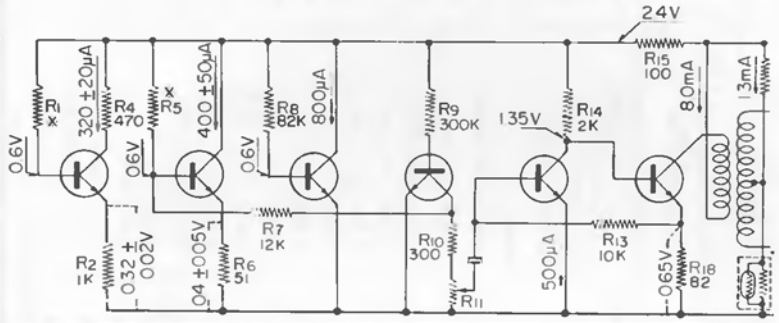

Voltage and Current Distribution Chart at Zero Signal

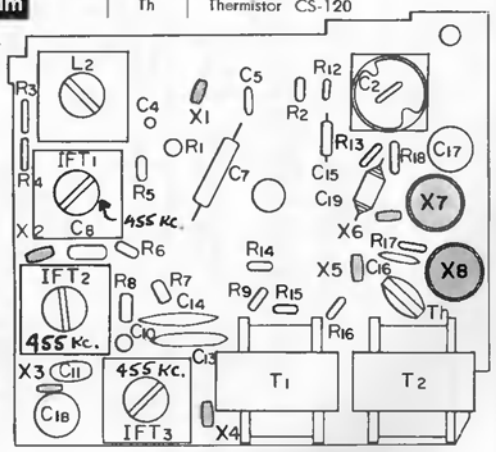

Mounting Diagram

—Parts Side—

SONY CORPORATION

Model TR-830

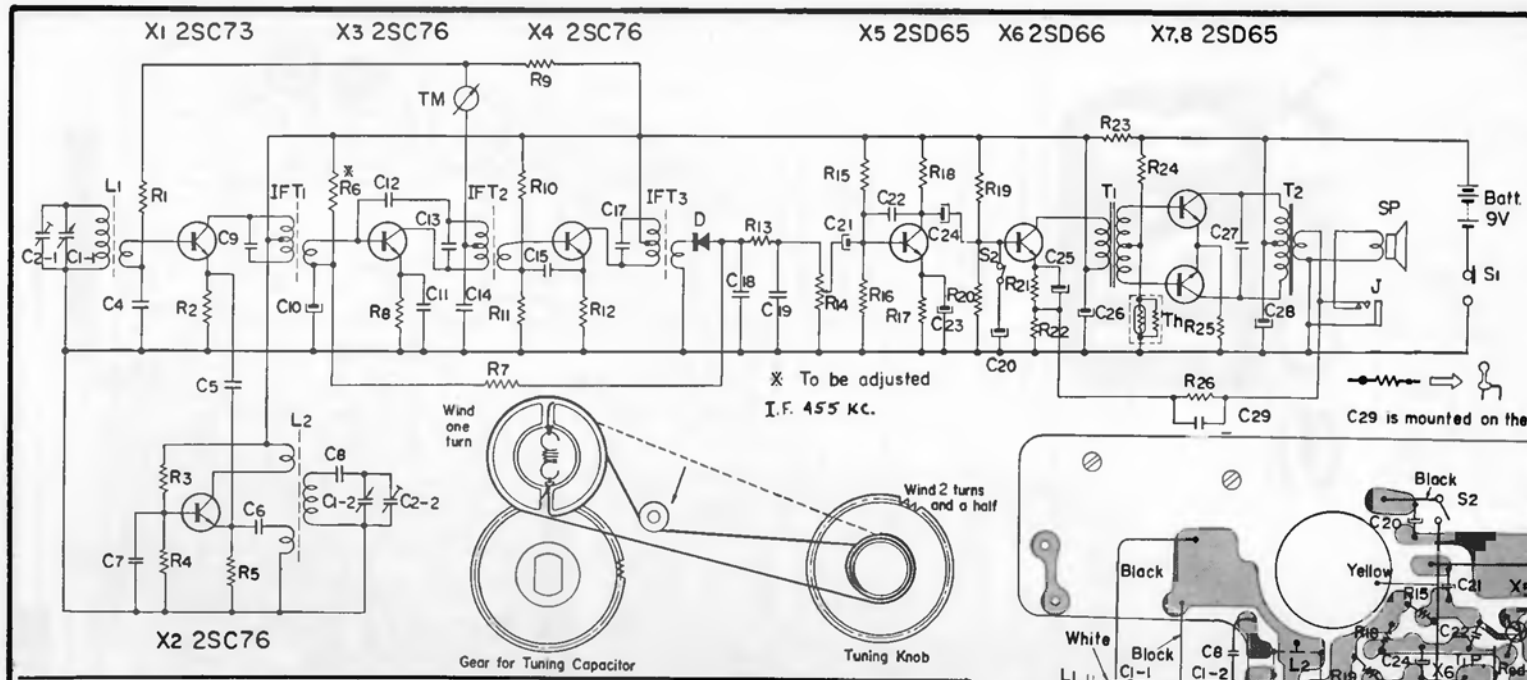

Symbol	Description	Symbol	Description	Symbol	Description
D	Diode 1T23G	R_{16}	5.6K Ω 〃 〃	C_{10}	10μF 3V Electrolytic
Th	Thermistor CS-120	R_{17}	1K Ω 〃 〃	C_{11}	0.02μF Ceramic
	Resistor	R_{18}	1K Ω 〃 〃	C_{12}	1PF 〃
R_1	10K Ω 1/16W Carbon	R_{19}	27K Ω 〃 〃	C_{13}	150PF (built in IFT_2)
R_2	30K Ω 〃 〃	R_{20}	10K Ω 〃 〃	C_{14}	0.01μF Ceramic
R_3	39K Ω 1/16W Carbon	R_{21}	1K Ω 〃 〃	C_{15}	0.01μF 〃
R_4	5.6K Ω 〃 〃	R_{22}	10 Ω 〃 〃	C_{16}	—deleted—
R_5	2.2K Ω 〃 〃	R_{23}	220 Ω 〃 〃	C_{17}	150PF (built in IFT_3)
*R_6	120K Ω 〃 〃	R_{24}	7.5K Ω 〃 〃	C_{18}	0.02μF Ceramic
R_7	5.6K Ω 〃 〃	R_{25}	10 Ω 〃 〃	C_{19}	0.01μF 〃
R_8	470 Ω 〃 〃	R_{26}	680 Ω 〃 〃	C_{20}	0.3μF 15V Electrolytic
R_9	10K Ω 〃 〃		**Capacitor**	C_{21}	10μF 3V 〃
R_{10}	39K Ω 〃 〃	C_{1-1-2}	Tuning Capacitor, 2 gang	C_{22}	0.005μF Mylar
R_{11}	3.3K Ω 〃 〃	C_{2-1-2}	Trimmer Capacitor, 2 unit	C_{23}	10μF 3V Electrolytic
R_{12}	470 Ω 〃 〃	C_4	0.02μF Ceramic	C_{24}	10μF 6V 〃
R_{13}	1.8K Ω 〃 〃	C_5	0.002μF Mylar	C_{25}	30μF 3V 〃
R_{14}	5K Ω Volume Control	C_6	0.002μF 〃	C_{26}	30μF 10V 〃
R_{15}	36K Ω 1/16W Carbon	C_7	0.01μF Ceramic	C_{27}	0.04μF Ceramic
		C_8	130PF Styrol	C_{26}	50μF 10V Electrolytic
		C_9	150PF (built in IFT_1)	C_{29}	0.02μF Ceramic

* To be adjusted

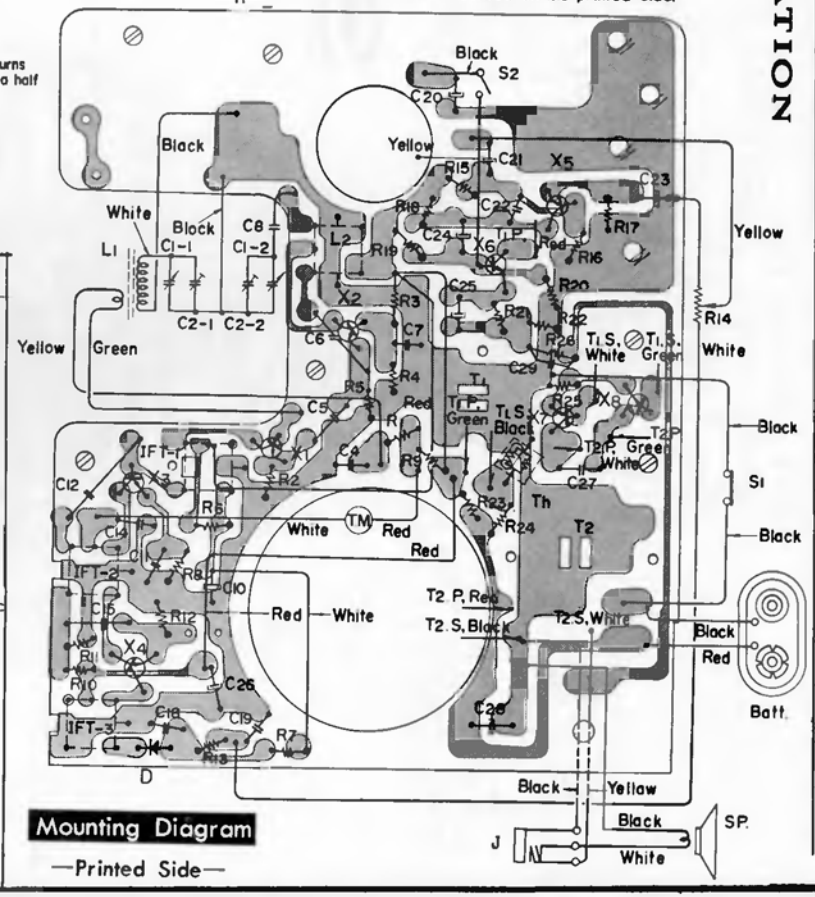

Mounting Diagram

—Printed Side—

SYLVANIA

CHASSIS: 309-1

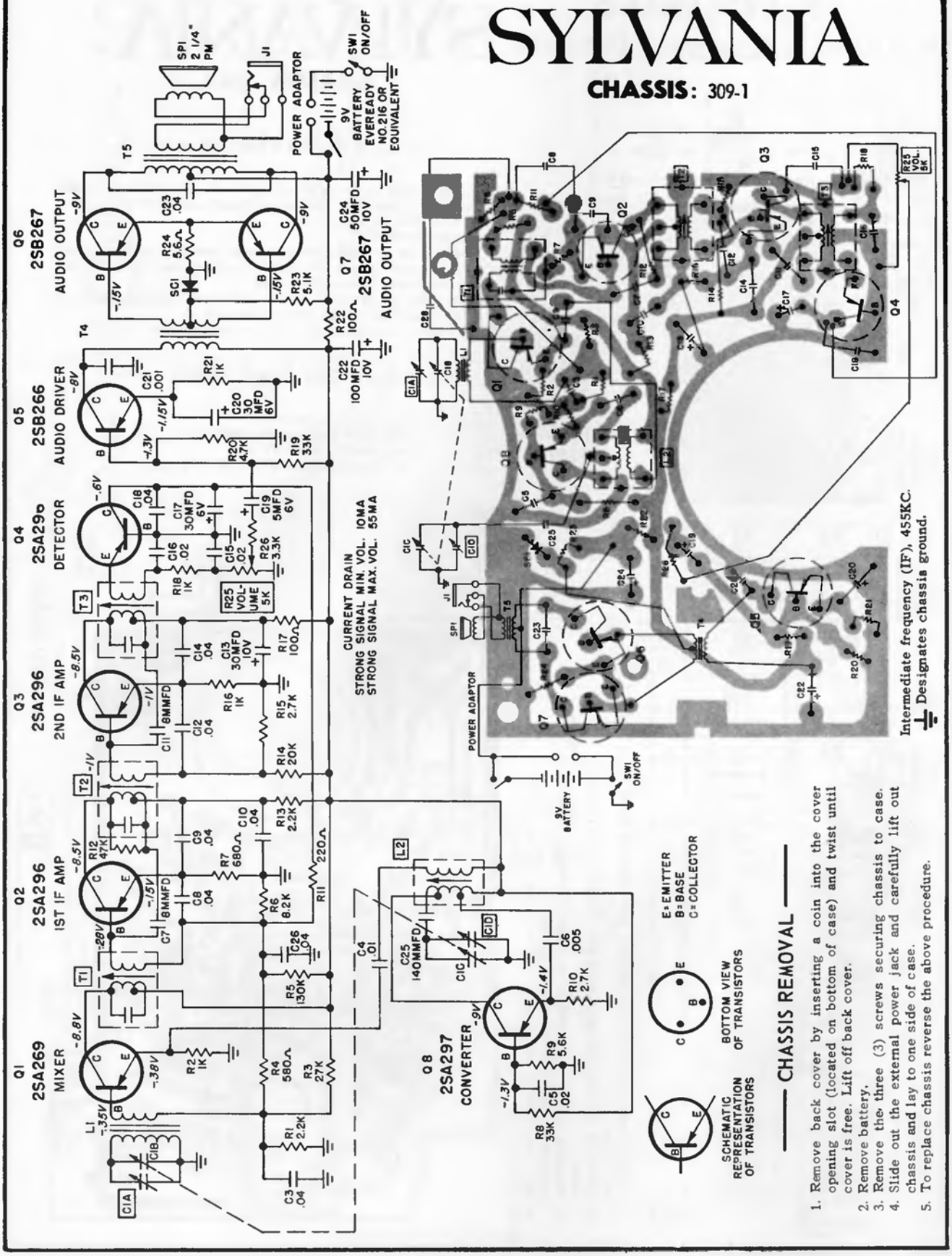

CHASSIS REMOVAL

1. Remove back cover by inserting a coin into the cover opening slot (located on bottom of case) and twist until cover is free. Lift off back cover.
2. Remove battery.
3. Remove the three (3) screws securing chassis to case.
4. Slide out the external power jack and carefully lift out chassis and lay to one side of case.
5. To replace chassis reverse the above procedure.

SYLVANIA

CHASSIS: 324-1

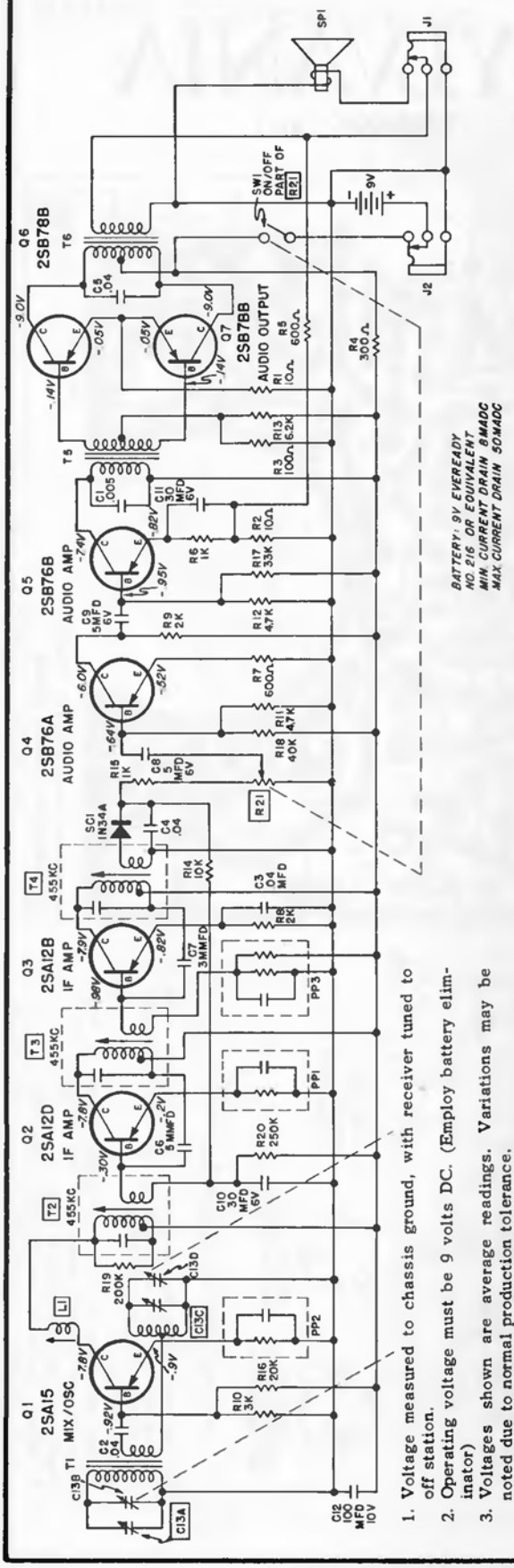

1. Voltage measured to chassis ground, with receiver tuned to off station.
2. Operating voltage must be 9 volts DC. (Employ battery eliminator)
3. Voltages shown are average readings. Variations may be noted due to normal production tolerance.
4. All capacitors in microfarads unless otherwise specified.

CHASSIS REMOVAL

1. Remove back cover by inserting a coin into the cover opening slot (located on bottom of case) and twist until cover is free. Lift off back cover.
2. Remove battery.
3. Remove the two (2) screws located near the corners of the chassis and loosen the screw securing the clamp on the speaker field. Remove the clamp.
4. Slide out the external power jack and carefully lift out chassis and lay to one side of the case.
5. To replace chassis reverse the above procedure.

BATTERY COMPLEMENT

EVEREADY number 216
RAY - O - VAC number 1604
MALLORY number TR146R
OR EQUIVALENT TYPE BATTERIES.

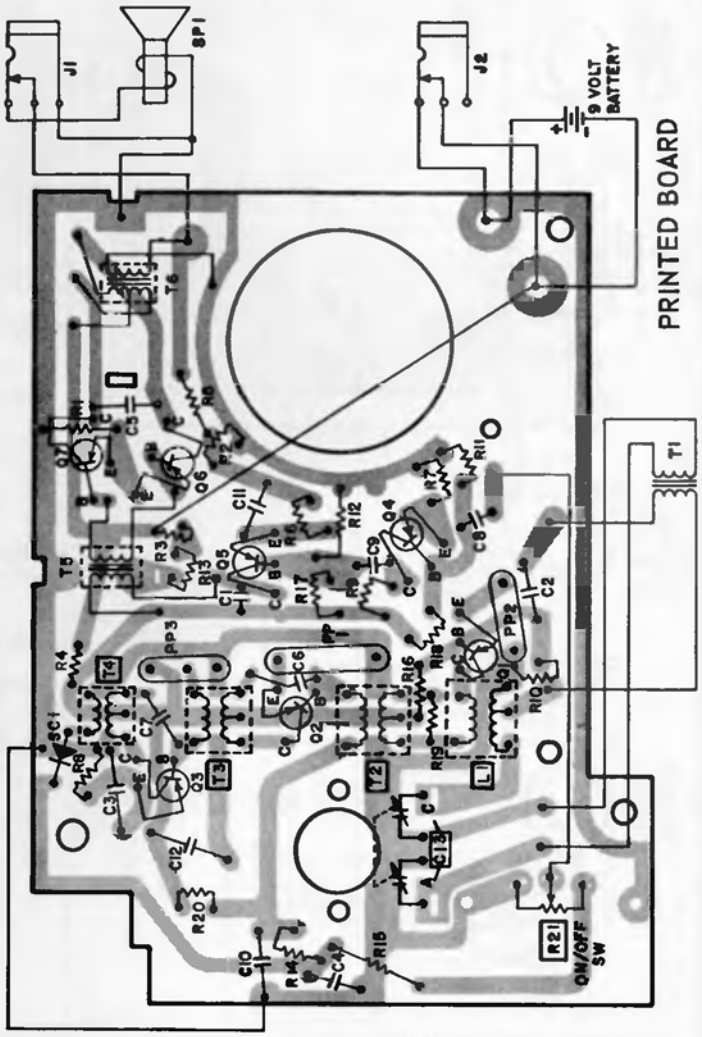

SYLVANIA

CHASSIS: 408-1,-2

MODELS SC508K, M, TG, W, SC511M, W

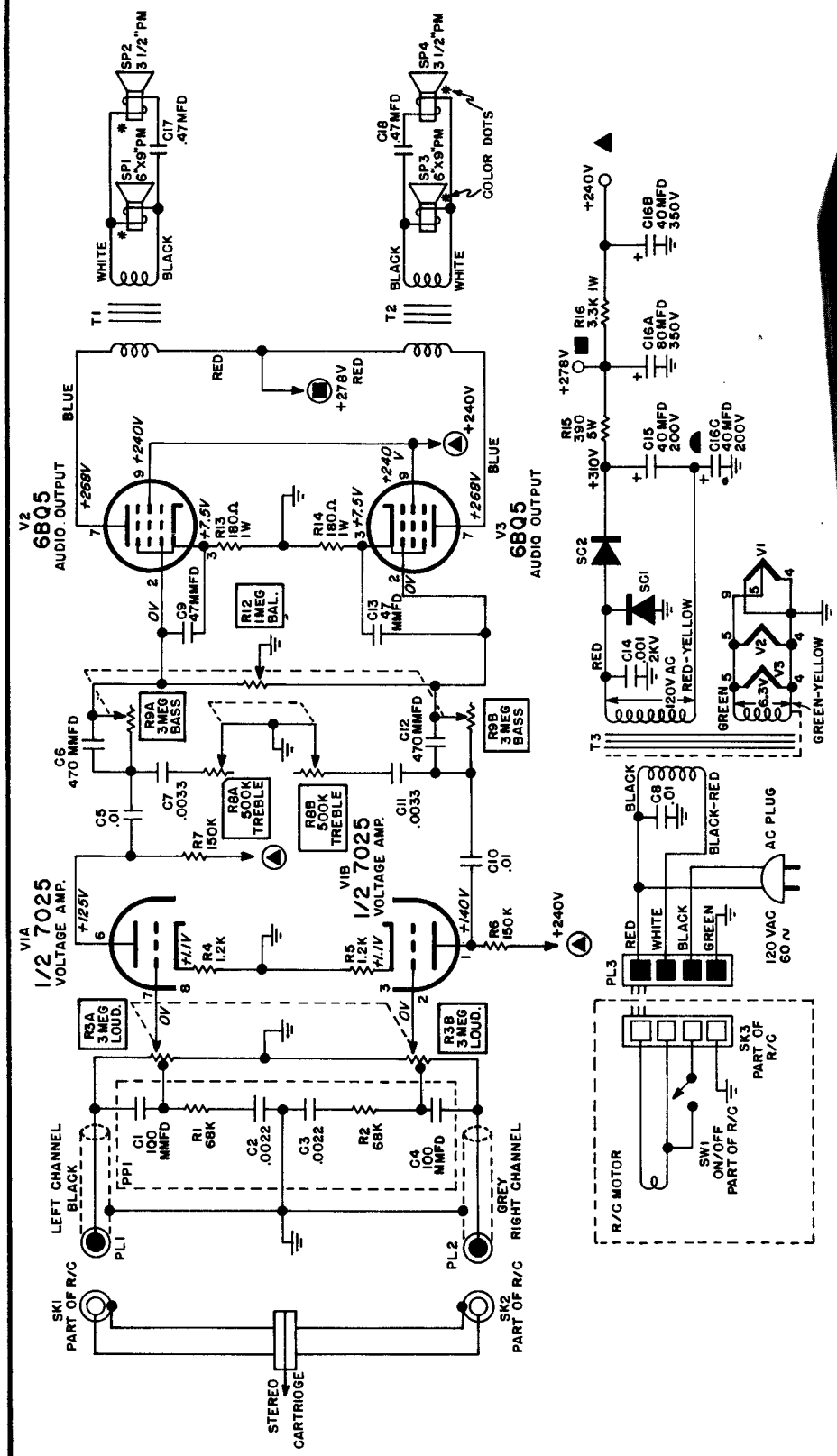

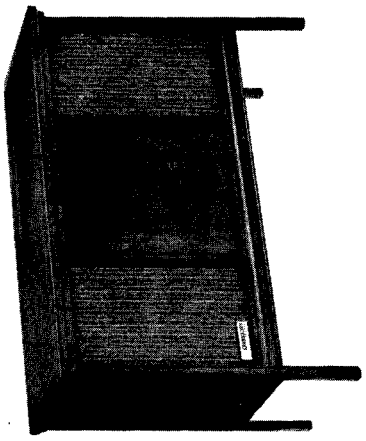

MODEL SC511M,W

—SCHEMATIC NOTES—

1. VOLTAGES SHOWN ARE AVERAGE READINGS MEASURED TO CHASSIS WITH NO SIGNAL INPUT. VARIATIONS MAY BE NOTED DUE TO NORMAL PRODUCTION TOLERANCE.
2. LINE VOLTAGE 120 VOLT, 60 CYCLE.
3. ALL CAPACITORS IN MICROFARADS UNLESS OTHERWISE SPECIFIED.
4. VOLTAGE SOURCES ARE INDICATED BY SYMBOLS ◀ ; THE CORRESPONDING SYMBOLS WITH CIRCLES ◀ INDICATE VOLTAGE TIE POINTS.
5. R3 , R8 AND R9 ARE DUAL CONTROLS.
6. ⏚ DESIGNATES CHASSIS GROUND.

SYLVANIA Tuner 370-1 used in Chassis 802-1, -2, and 803-1, -2

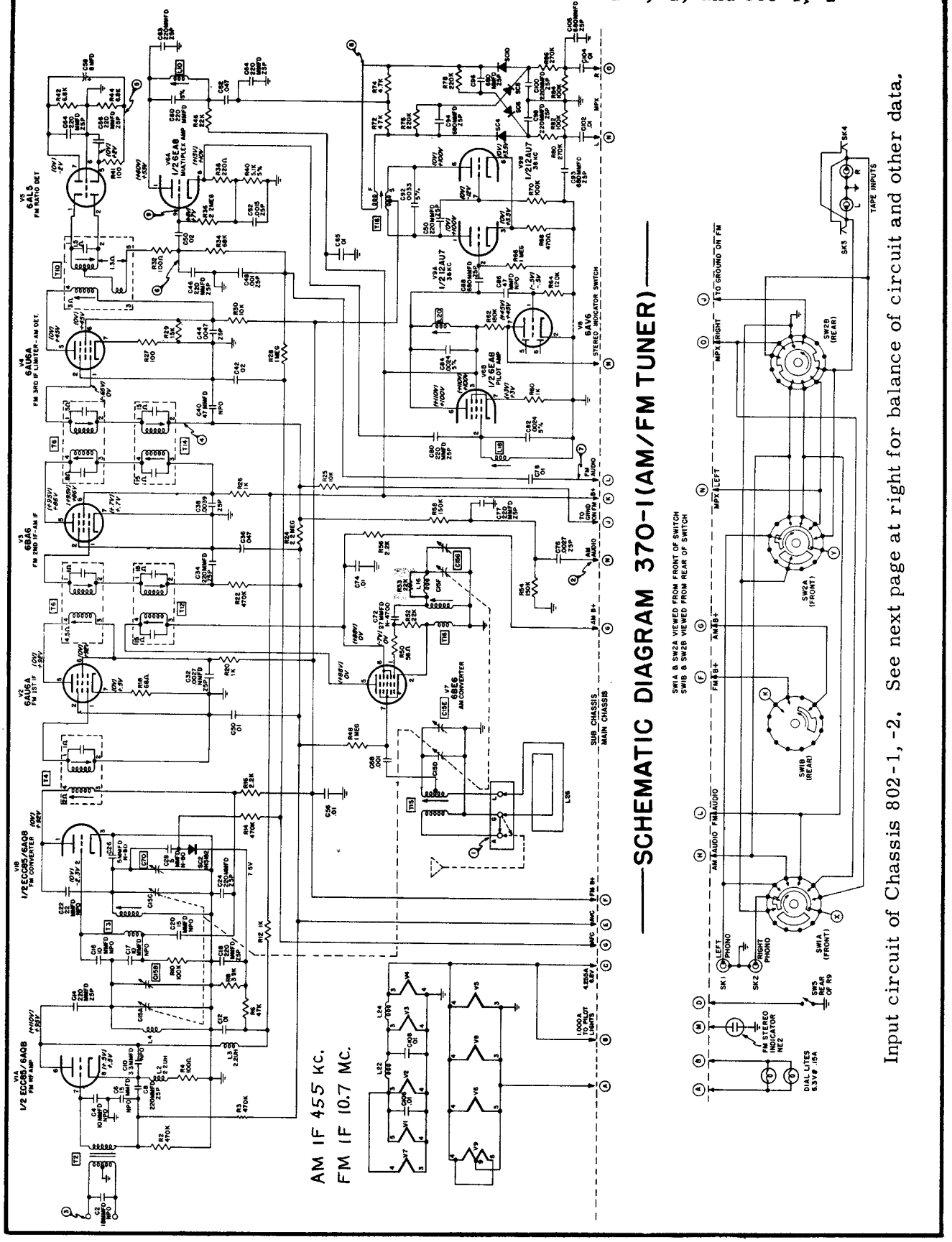

Input circuit of Chassis 802-1, -2. See next page at right for balance of circuit and other data.

SYLVANIA

CHASSIS: 802-1,-2

Models SC515M, W, SC521M, W, SC526K

For other material on these sets including Tuner 370-1 used, see preceding page.

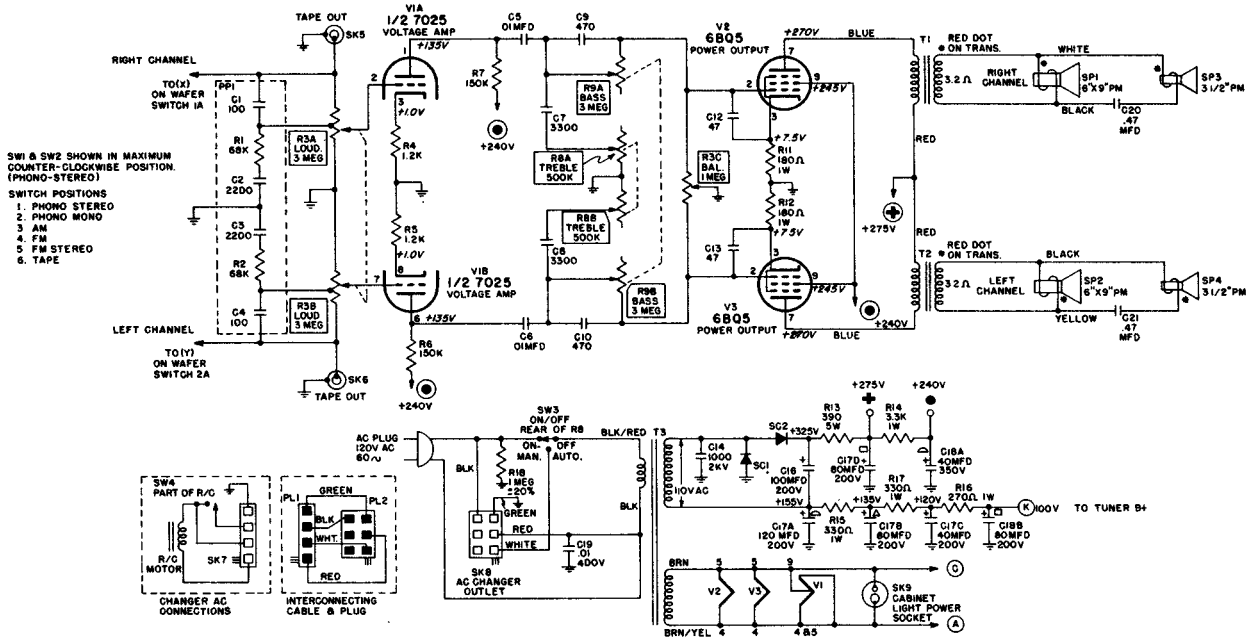

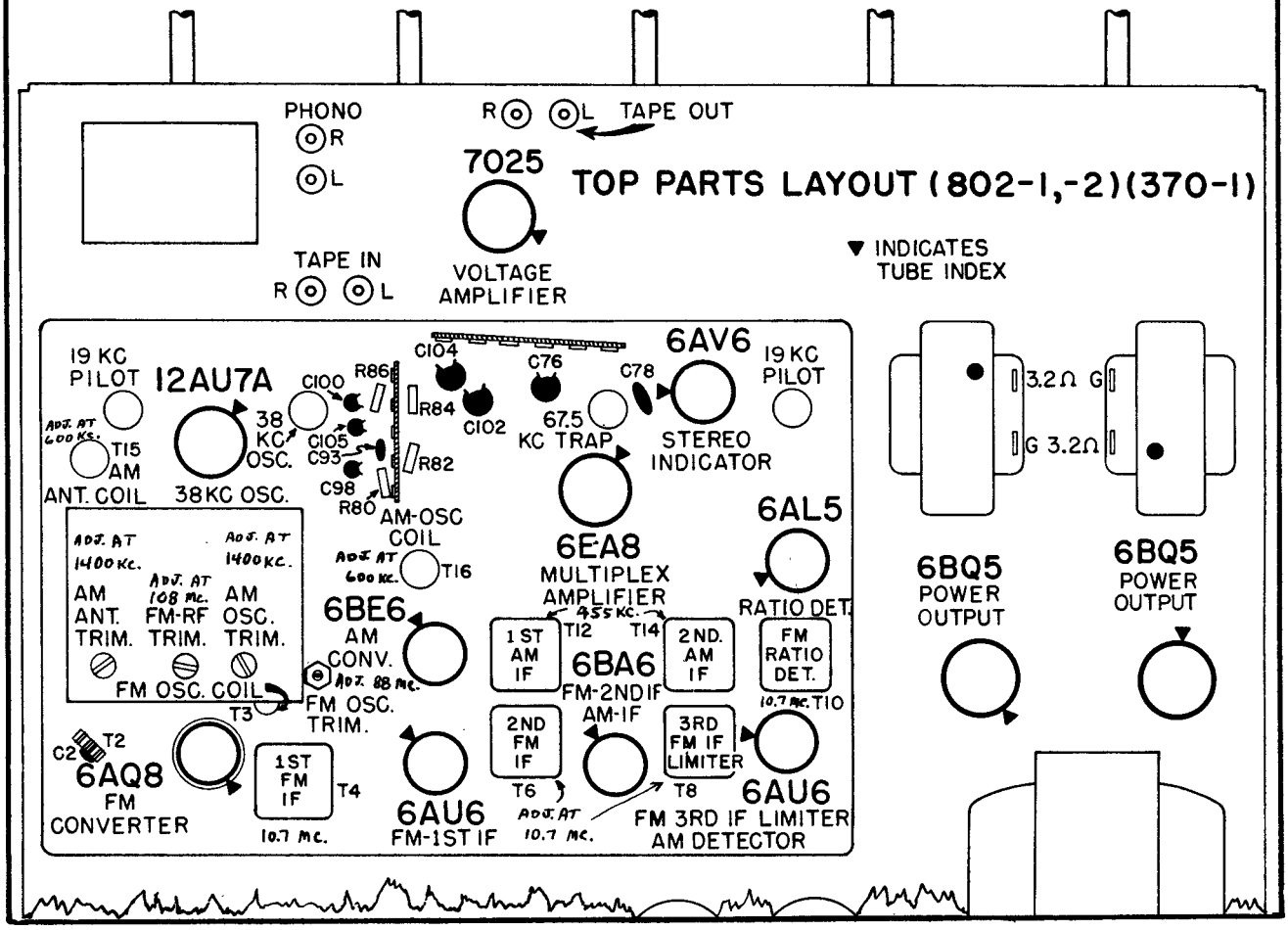

SYLVANIA

CHASSIS:803-1,-2

MODELS SC541W, SC542CH, GN, M, SC543, SC561M, W

(These models use Tuner 370-1, see page 152 for diagram)

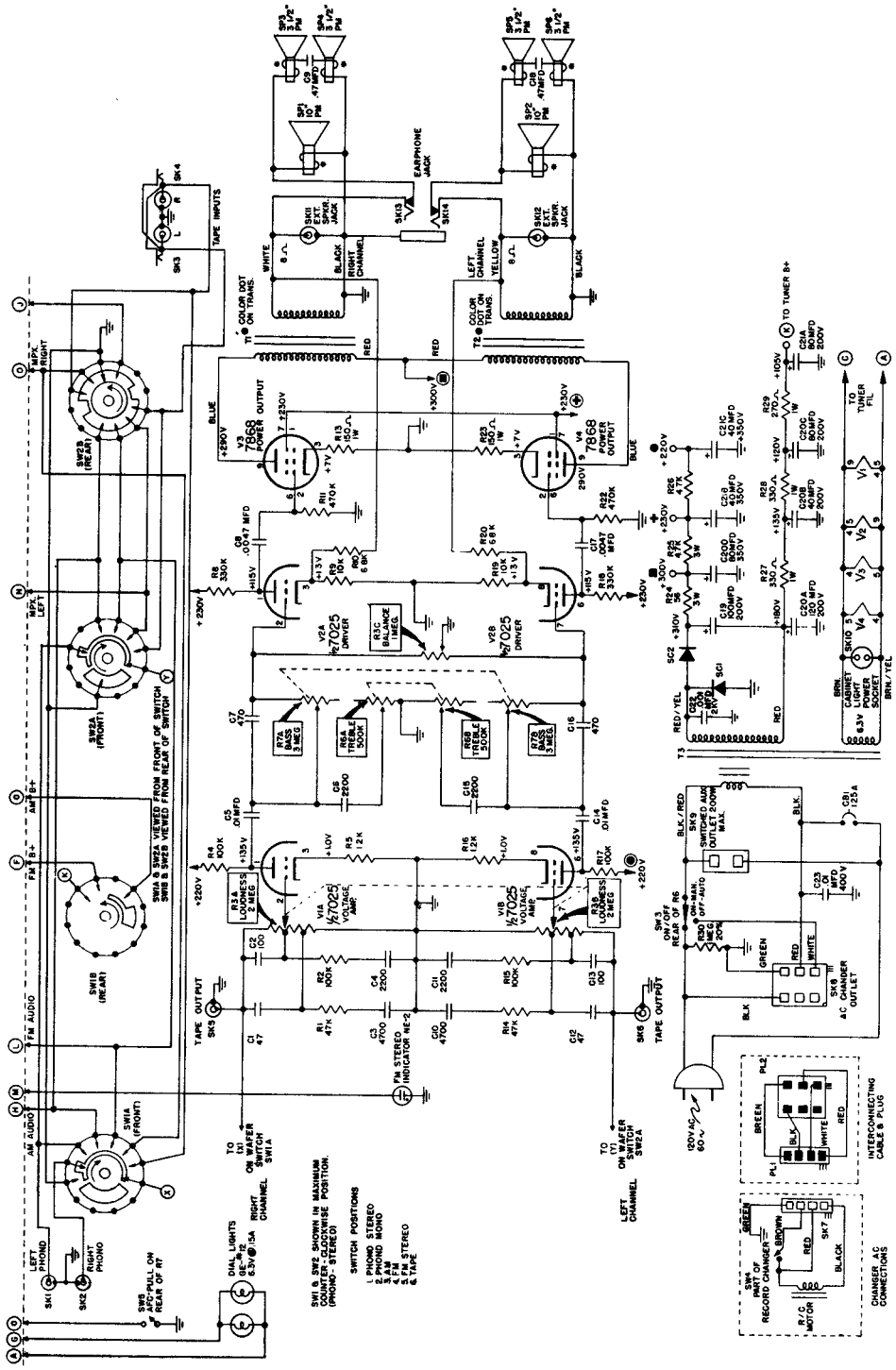

SCHEMATIC NOTES

1. VOLTAGES SHOWN ARE AVERAGE READINGS MEASURED TO CHASSIS WITH NO SIGNAL INPUT. VARIATIONS MAY BE NOTED DUE TO NORMAL PRODUCTION TOLERANCES.
2. AC POWER SOURCE 120 VOLT, 60 CYCLE.
3. CAPACITANCE IN MICROMICROFARADS UNLESS OTHERWISE SPECIFIED.
4. A VOLTAGE SOURCE IS INDICATED BY A SYMBOL ● ; THE CORRESPONDING SYMBOL WITH A CIRCLE ◉ INDICATES THE VOLTAGE TIE POINT.
5. ⏚ DESIGNATES CHASSIS GROUND.
6. ✱ INDICATES COLOR DOT ON SPEAKERS FOR CORRECT PHASING.
7. R3, R6, R7, ARE DUAL GANGED CONTROLS.

SYLVANIA

CHASSIS: 413-1

MODEL: 45P41 SERIES

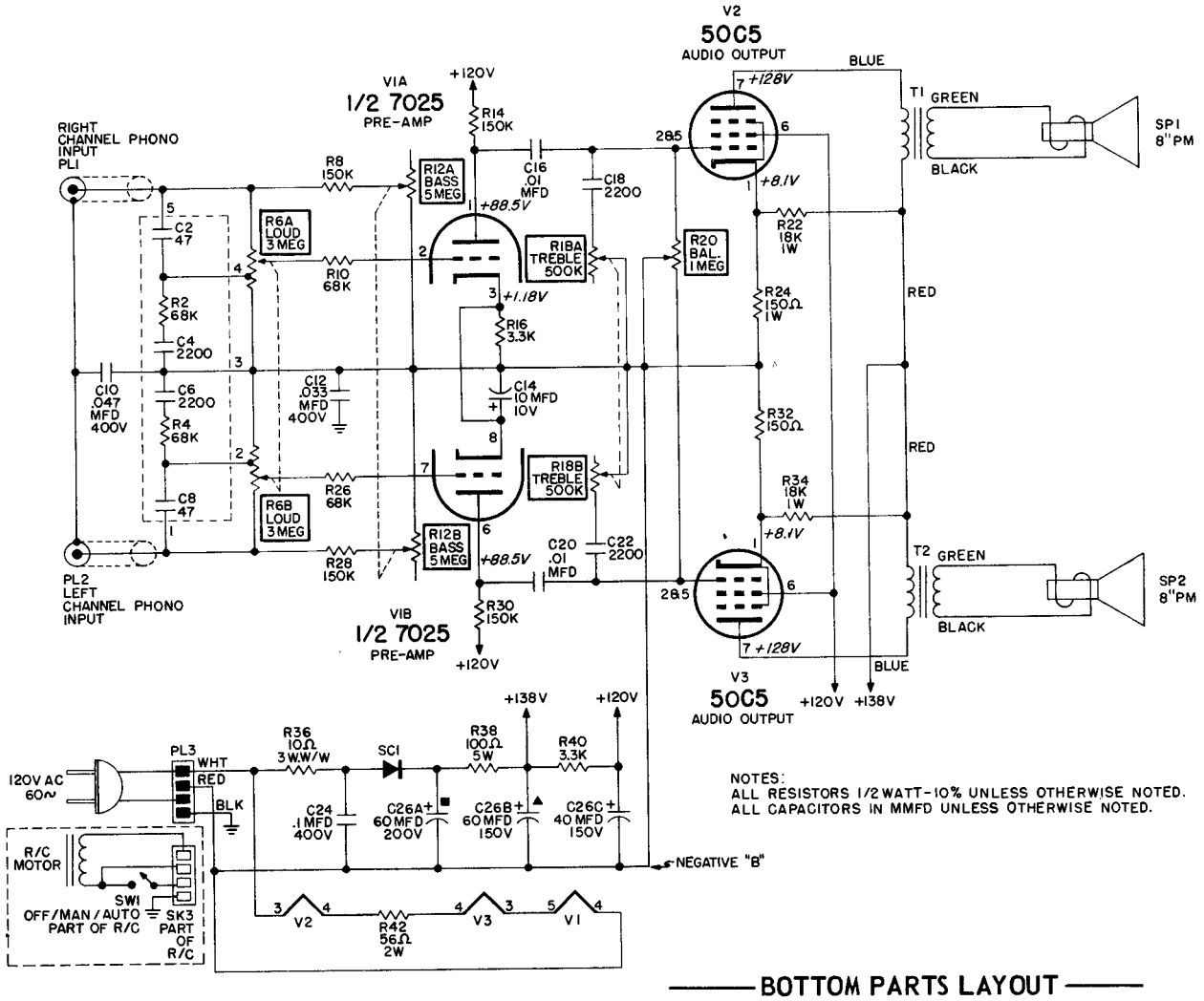

NOTES:
ALL RESISTORS 1/2 WATT-10% UNLESS OTHERWISE NOTED.
ALL CAPACITORS IN MMFD UNLESS OTHERWISE NOTED.

BOTTOM PARTS LAYOUT

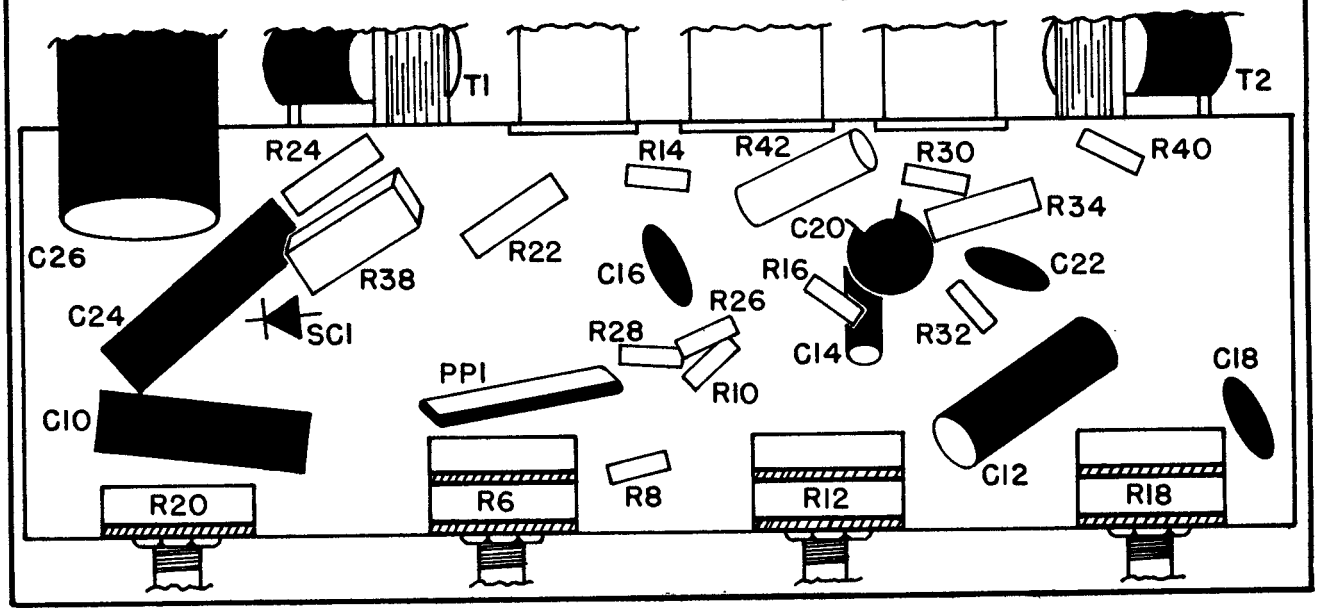

SYLVANIA

Tuner 371-1 used in Chassis 802-5, 803-5, see pages 157 and 158 for more material on this tuner and data on amplifiers used with these chassis.

SCHEMATIC DIAGRAM 371-1 (AM/FM TUNER)

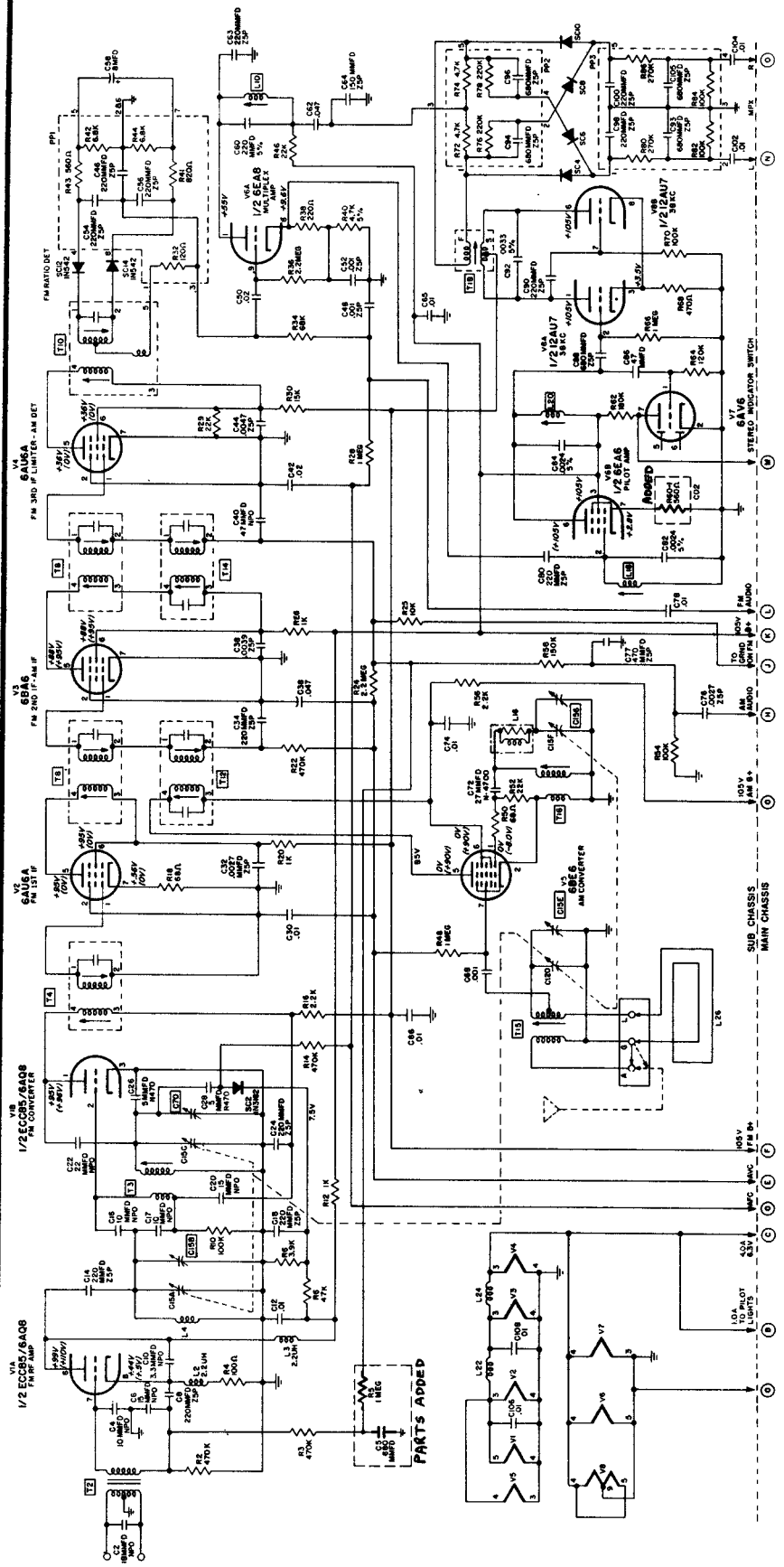

DIAL STRINGING (371-1 CHASSIS)

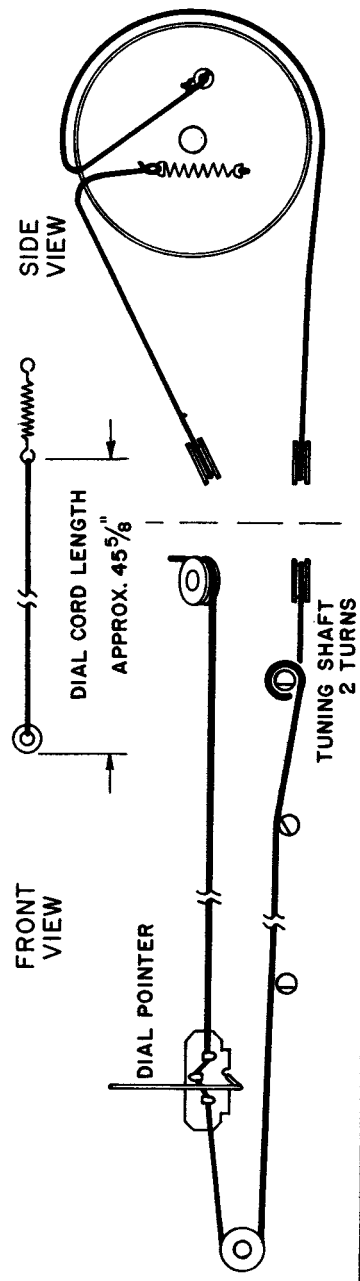

SYLVANIA

CHASSIS: 802-5

MODELS: SC721, SC724 SERIES

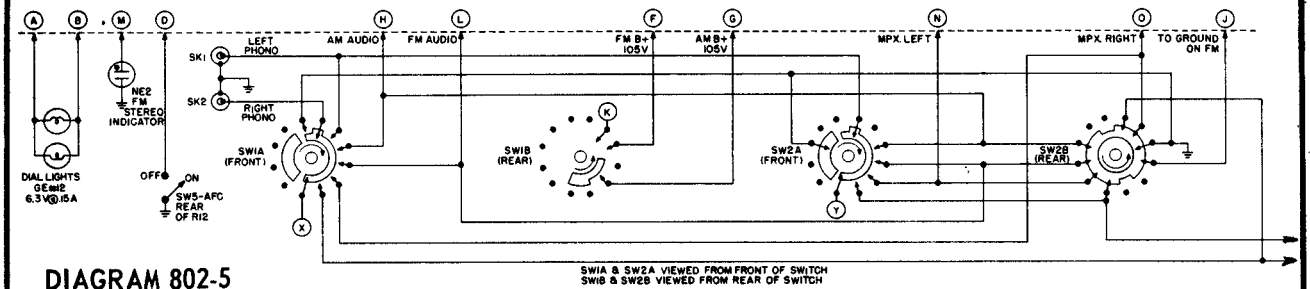

DIAGRAM 802-5

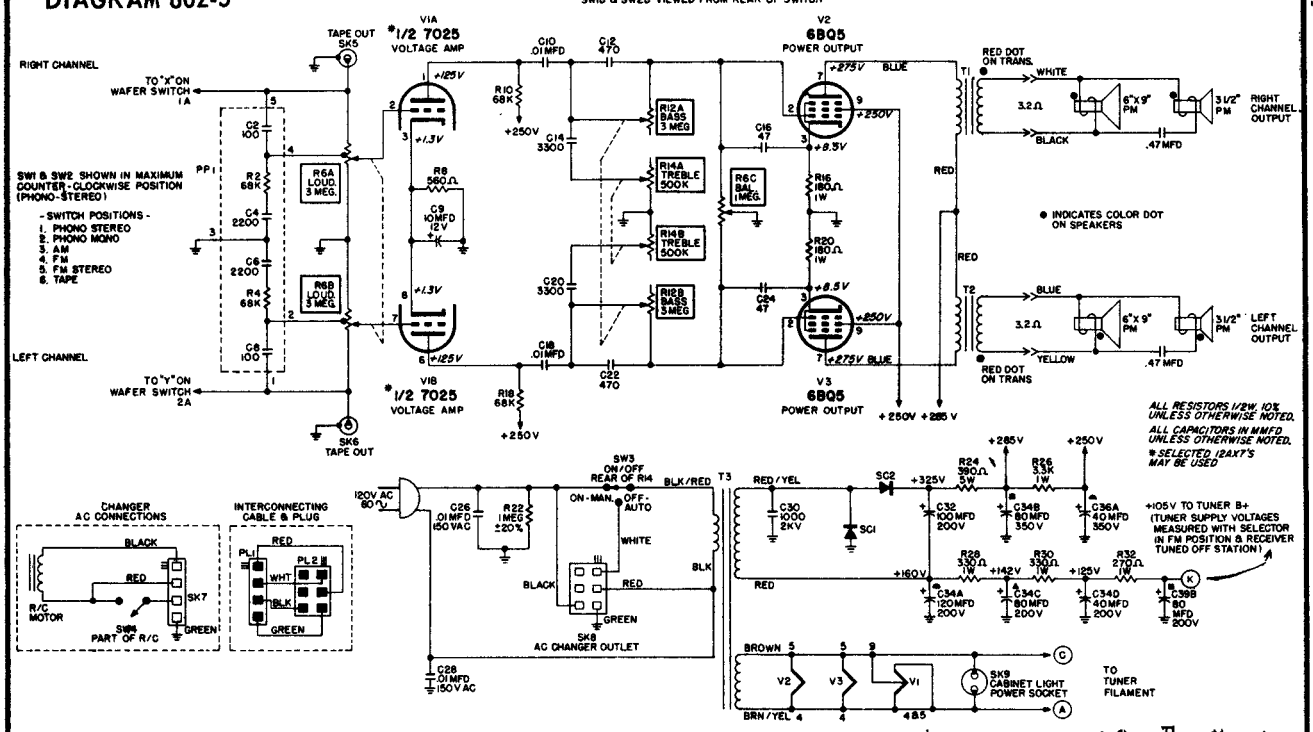

TOP PARTS LAYOUT (371-1)

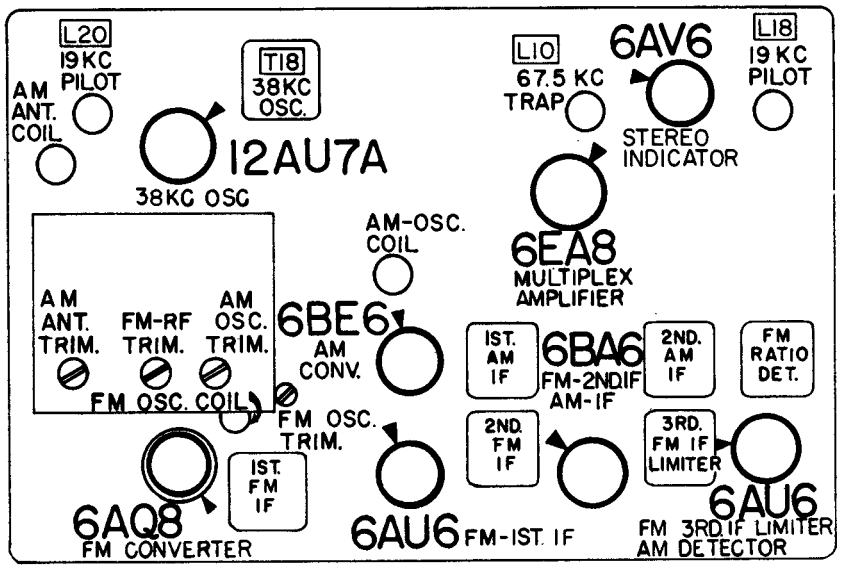

CHASSIS REMOVAL

1. Disconnect AC power cord from power outlet.
2. Remove screws securing backcover to cabinet; remove backcover.
3. Identify and disconnect the following:
   A. Speaker leads at output transformer.
   B. Record changer motor plug on chassis.
   C. Phono input leads on chassis.
   D. Antenna lead connections on antenna terminal board.
   E. Jewel indicating light connector at bottom rear of chassis.
4. Remove screw anchoring AC line cord to the inside of the base of the cabinet.
5. Remove the two (2) screws securing antenna terminal board to cabinet.
6. Remove control knobs on the control panel by pulling straight up.
7. Remove seven (7) screws securing chassis to cabinet and remove chassis from cabinet.

SYLVANIA

CHASSIS: 803-5

MODELS: SC740,SC741,SC743,SC744,SC746,SC748 SERIES

(These models use 371-1 AM-FM Tuner, see pages 156-157 for data)

SCHEMATIC DIAGRAM 803-5

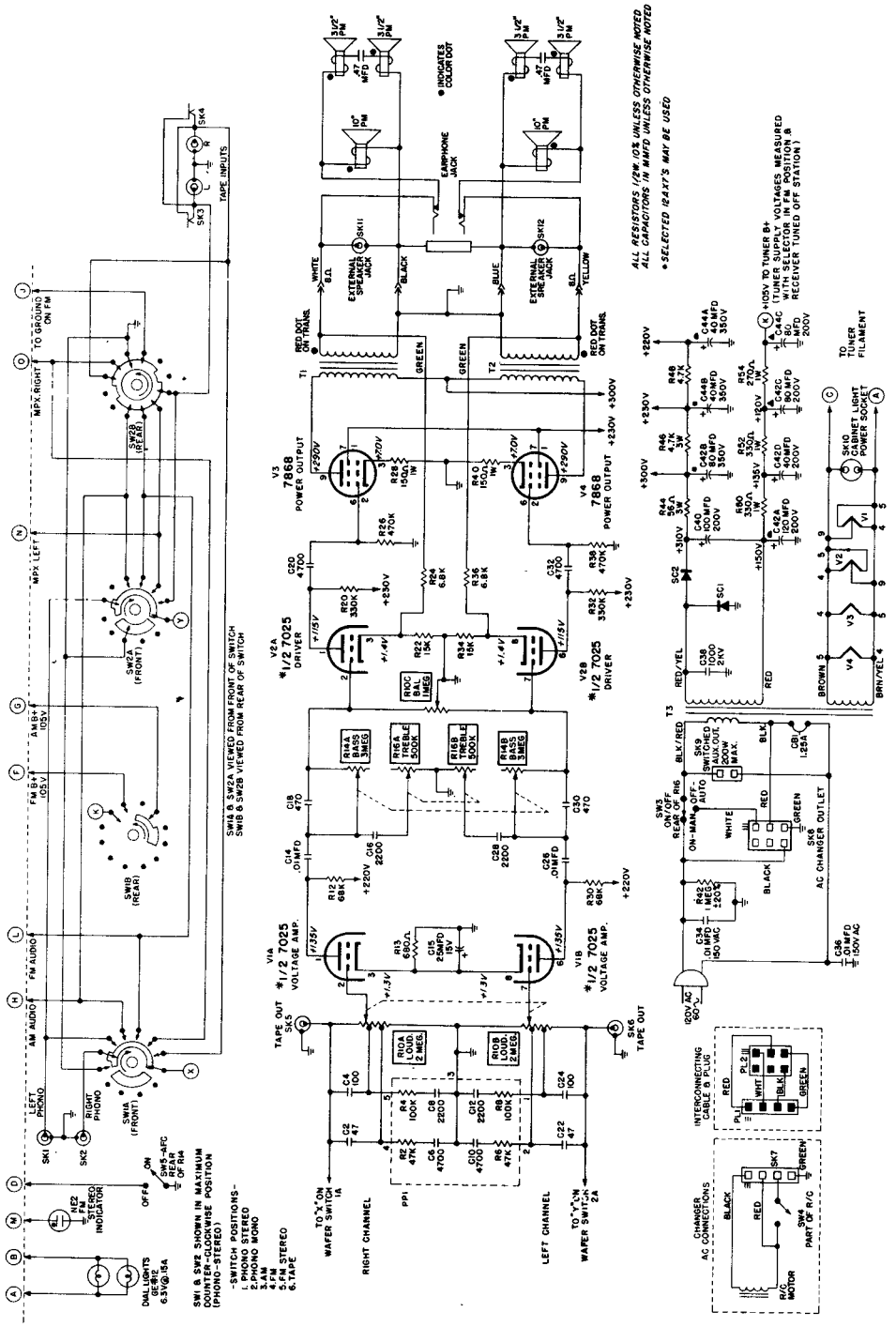

SCHEMATIC NOTES

1. Voltages shown are average readings measured to chassis with no signal input. Variations may be noted due to normal production tolerances.
2. AC power source 120 volt, 60 cycle.
3. Capacitance in micro-microfarads unless otherwise noted.
4. ⏚ designates chassis ground.
5. ● indicates color dot on speakers for correct phasing.
6. R10, R14, R16, are dual ganged controls.

Westinghouse

MODEL H-890P6GP

CHASSIS V-2455-1

TRANSISTOR COMPLEMENT			
FUNCTION	TYPE	W PART NO.	ALTERNATE
CONVERTER	PNP	297V055H01	297V026H03
1ST I.F.	PNP	297V038H04	
2ND I.F.	PNP	297V038H03	
AUDIO DRIVER	PNP	297V054H02	297V004H06
AUDIO OUTPUT	PNP	297V050H01*	297V023H04
*MATCHED PAIR			

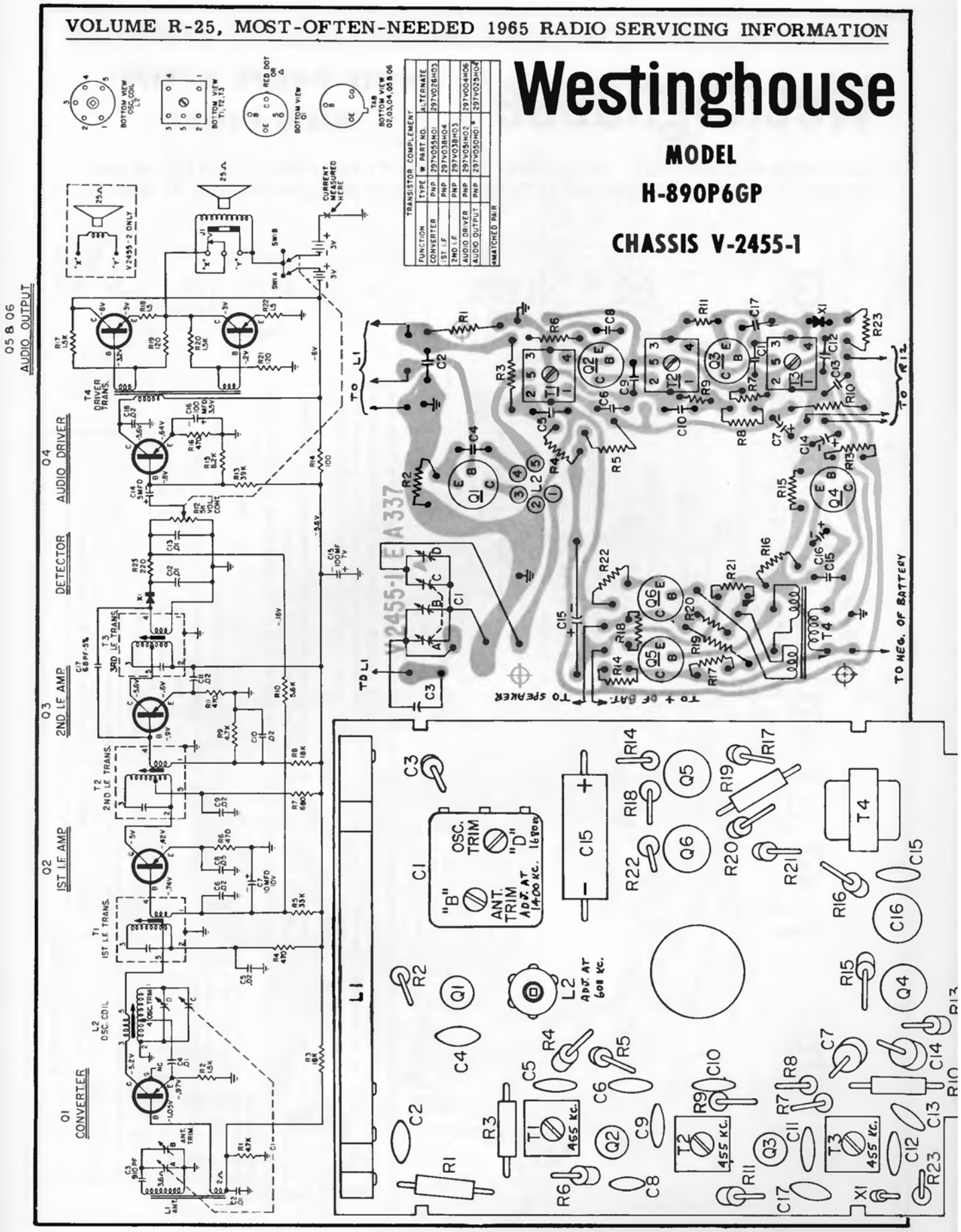

Westinghouse

MODELS H-898P8 H-899P8
CHASSIS V-2455-4

Also Models H-893P8GP, using Chassis V-2455-3, and Model H-897P8, using Chassis V-2455-5, are similar to V-2455-4 on this page and the page at right.

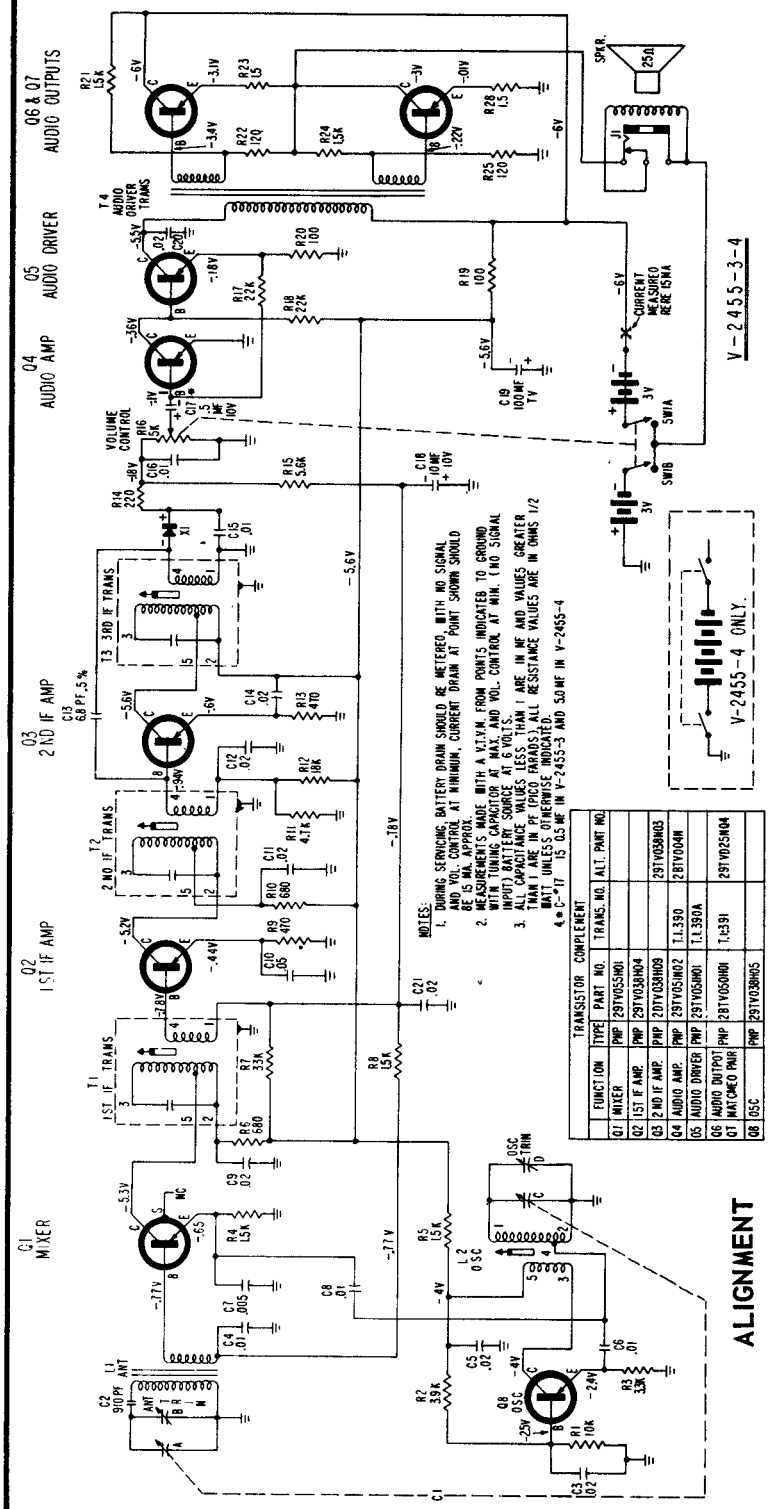

ALIGNMENT

SIGNAL GENERATOR – Use a generator providing modulated 455KC and AM broadcast frequencies. Connect a 4 or 5 turn loop of wire across output cable. Place the loop near the ferrite core antenna of the receiver. To increase or decrease the amount of signal coupled to the receiver move the loop closer or further from the antenna. Keep the output of the generator low enough to just give an indication on the VTVM or output meter to avoid AVC action. Keep the volume control set at maximum.

INDICATOR – Connect a VTVM or output meter across the voice coil.

RECEIVER – Set the volume control to maximum. During the last three steps be sure that the hand or any objects on the bench do not come in close contact with the antenna loop or detuning will occur and alignment will be incorrect.

ALIGNMENT TOOL – Use a fiber aligning tool that snugly fits the hex shaped hole in the cores of the IF transformers to prevent chipping.

Step	*Loosely couple modulated signal to:*	*Generator Frequency*	*C1 Setting*	*Adjust for maximum*
1.	Loop L1	455KC	Minimum	T3, T2 and T1 in order. Reduce generator output if necessary for T2 and T1 adjustments.
2.	Loop L1	1680KC	Minimum	Oscillator trimmer "D"
3.	Loop L1	1400KC	1400KC	Ant. trimmer "B"
4.	Loop L1	600KC	600KC	Oscillator coil, L2, if necessary.
5.	Repeat steps 2, 3 & 4.			

WESTINGHOUSE Chassis V-2455-4, Models H-898P8, H-899P8, Continued

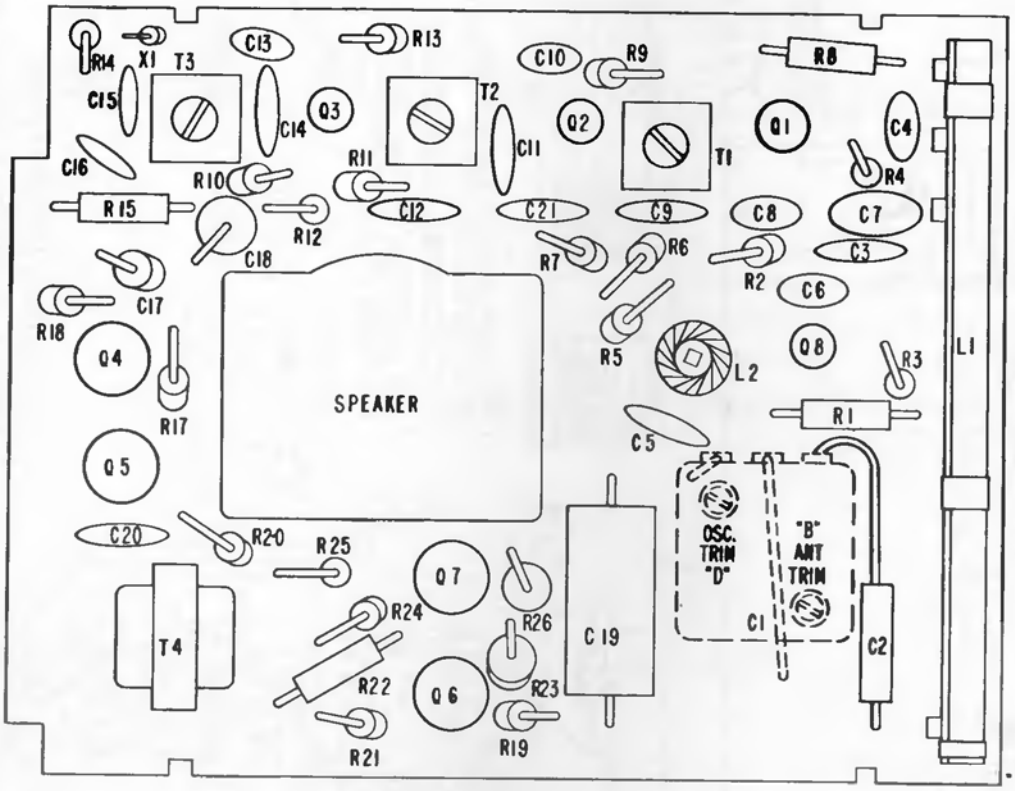

. Top View

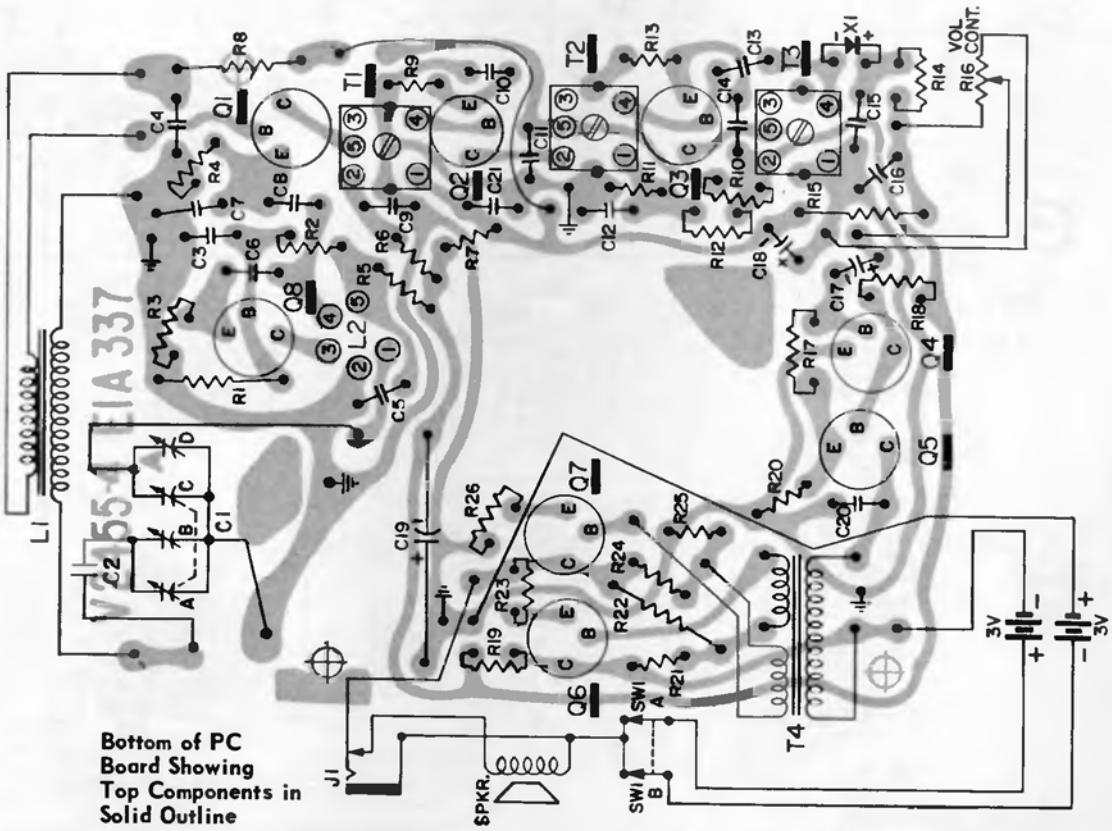

Bottom of PC Board Showing Top Components in Solid Outline

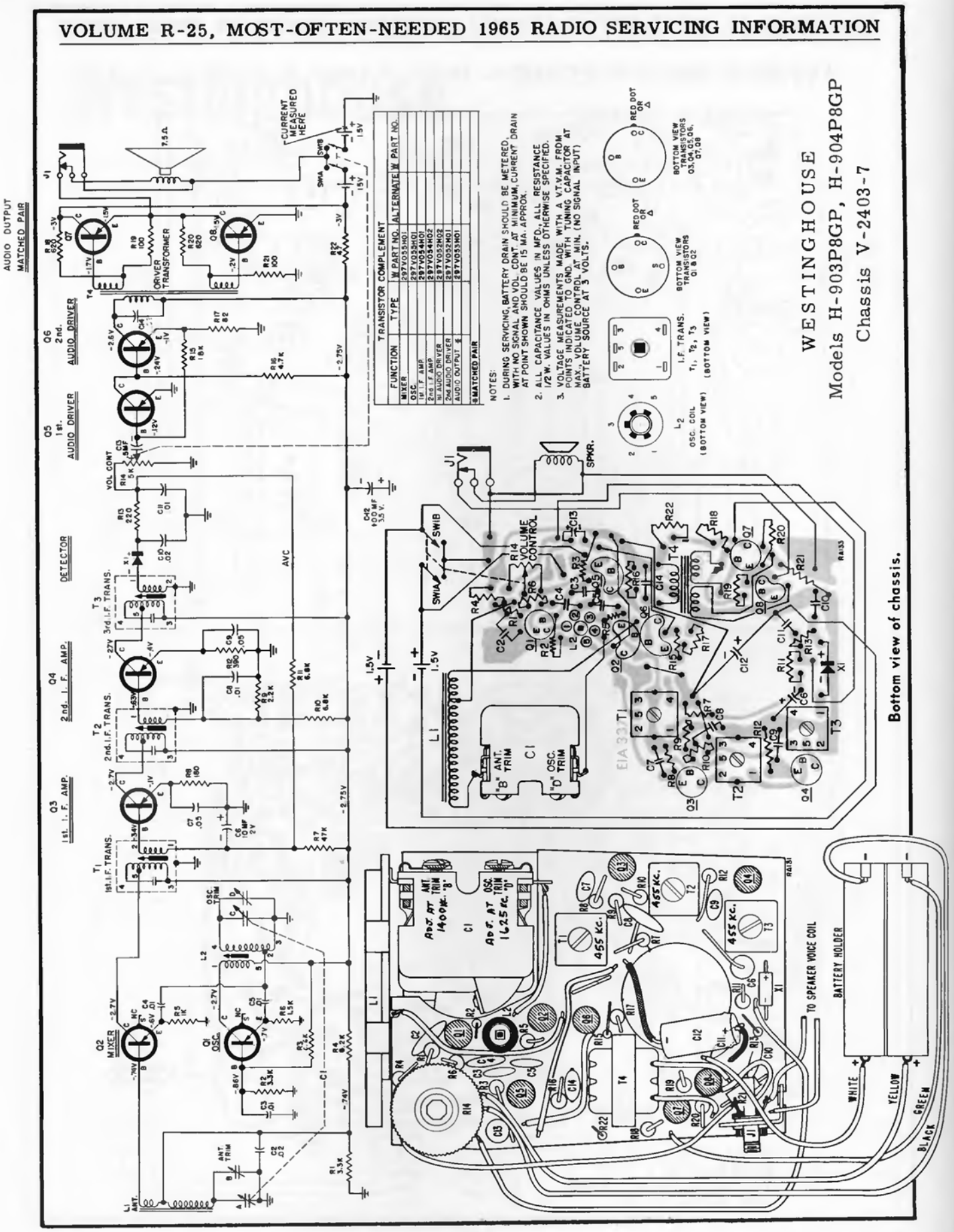

Bottom view of chassis.

WESTINGHOUSE Model H-907P8, Chassis V-2456-1

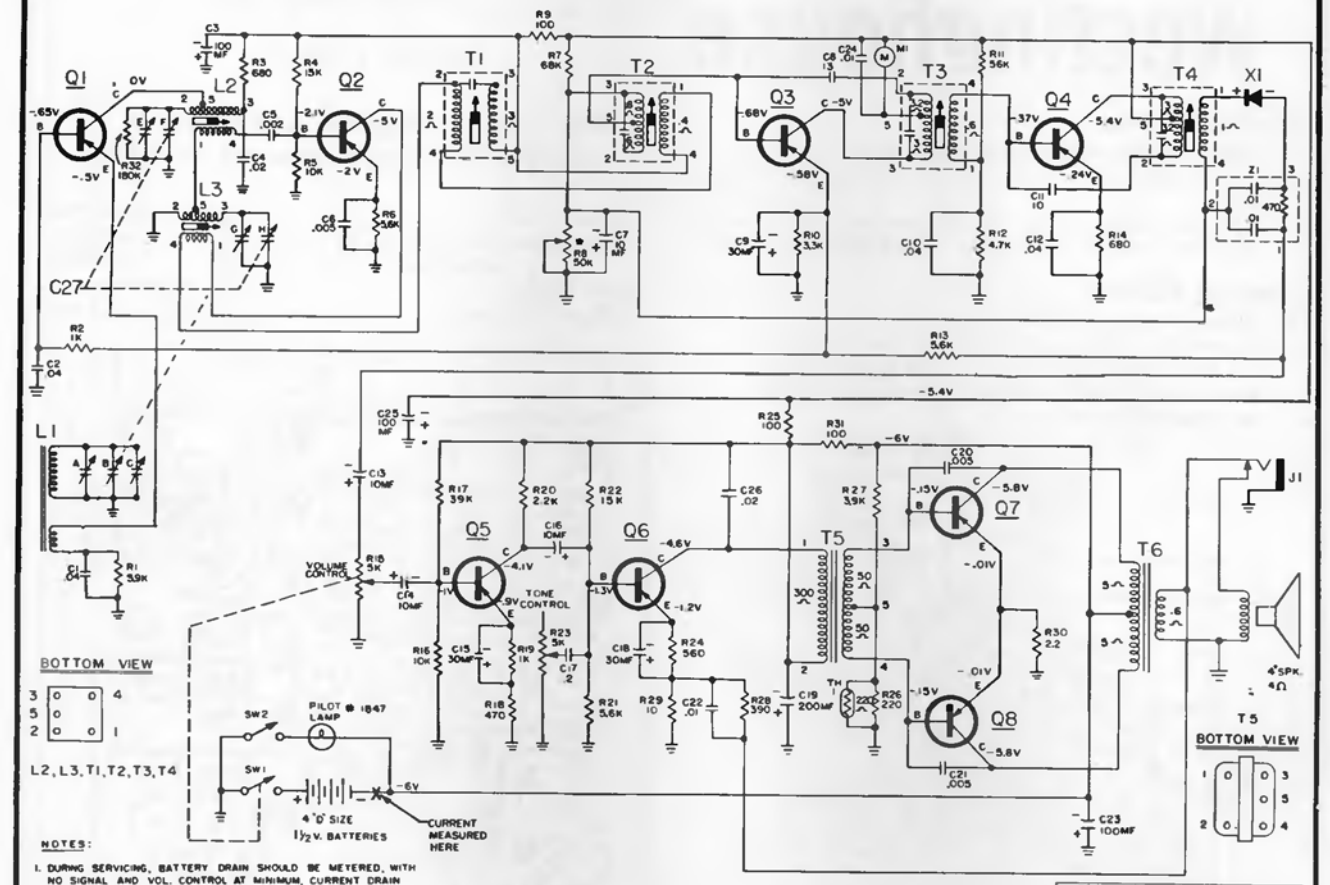

NOTES:

1. DURING SERVICING, BATTERY DRAIN SHOULD BE METERED, WITH NO SIGNAL AND VOL. CONTROL AT MINIMUM, CURRENT DRAIN SHOULD BE APPROX. 13MA.
2. ALL CAPACITANCE VALUES LESS THAN 1 ARE IN MF, AND VALUES GREATER THAN 1 ARE IN PF. ALL RESISTANCE VALUES ARE IN OHMS ½ WATT UNLESS OTHERWISE INDICATED.
3. VOLTAGE MEASUREMENTS MADE WITH V.T.V.M. FROM POINTS INDICATED TO GROUND, WITH TUNING CAPACITOR AT MAX., VOLUME CONTROL AT MIN. (NO SIGNAL INPUT). BATTERY SOURCE AT 6 VOLTS.

● BIAS CONTROL.

TRANSISTOR COMPLEMENT			
	FUNCTION	● PART NO.	ALTERNATES
Q1	RF.	690V047H54	
Q2	CONV.	690V047H55	
Q3	1 ST. IF.	690V047H56	
Q4	2ND. IF.	690V047H57	
Q5	1ST. AUDIO	690V047H58	
Q6	AUDIO DRIVER	690V047H59	
Q7●	AUDIO OUTPUT		
Q8●	AUDIO OUTPUT	690V047H60	
● MATCHED PAIR			

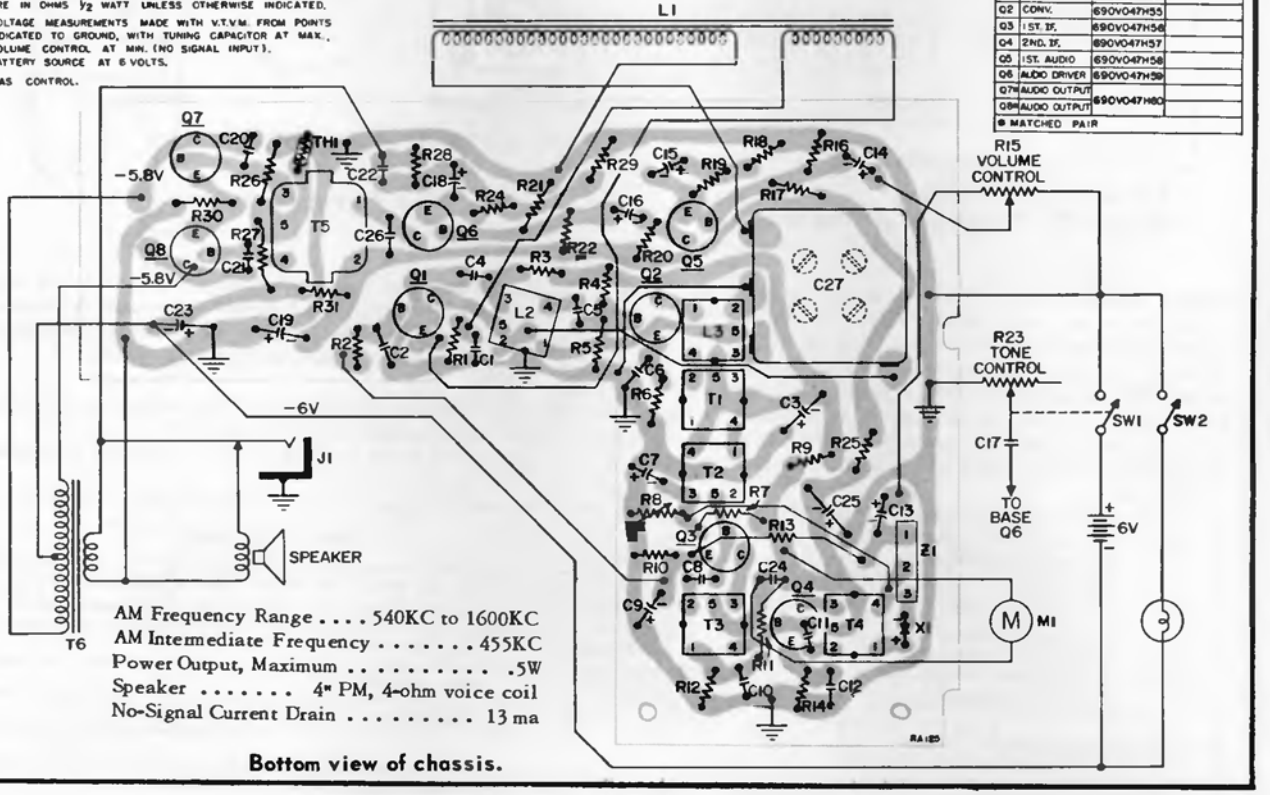

AM Frequency Range . . . . 540KC to 1600KC
AM Intermediate Frequency 455KC
Power Output, Maximum 5W
Speaker . . . . . 4" PM, 4-ohm voice coil
No-Signal Current Drain . . . . . 13 ma

Bottom view of chassis.

Westinghouse

H-902P6GP

CHASSIS V-2461-1

CHASSIS REMOVAL

1. Remove the nut holding the earphone jack.
2. Remove three screws holding the PC board to the cabinet front.
3. Slide the chassis to the rear so that the Volume knob clears the cabinet. The speaker remains in the cabinet.

SPEAKER REMOVAL

1. Follow steps 1 thru 3 above.
2. Remove the speaker grille from the front of the cabinet. The grille is held to the cabinet front by metal tabs.
3. When replacing the speaker, the terminals should be at the bottom of the cabinet.

For circuit diagram and other material see page adjacent at right.

Speaker	2" round, 8 ohm PM
Power Output (undistorted)	.140 watt
(maximum)	.200 watt
Power Supply	(1) 9V battery
No Signal Current Drain	6.6 ma

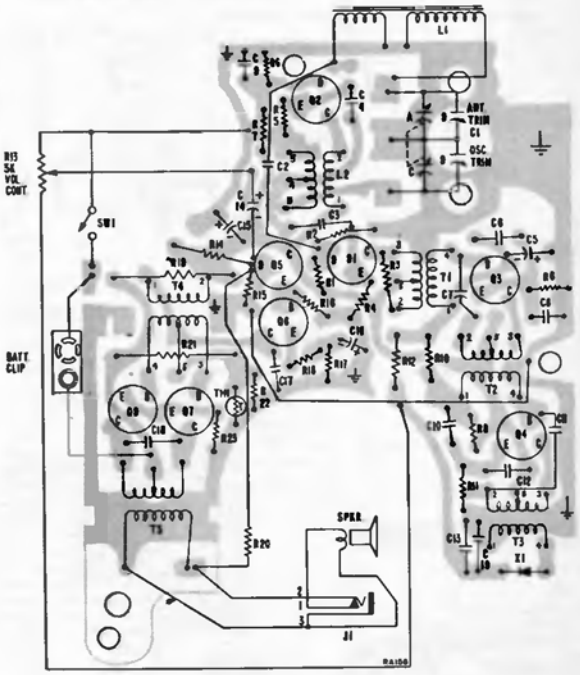

Bottom View of PC Board, Showing Top Components in Solid Outline.

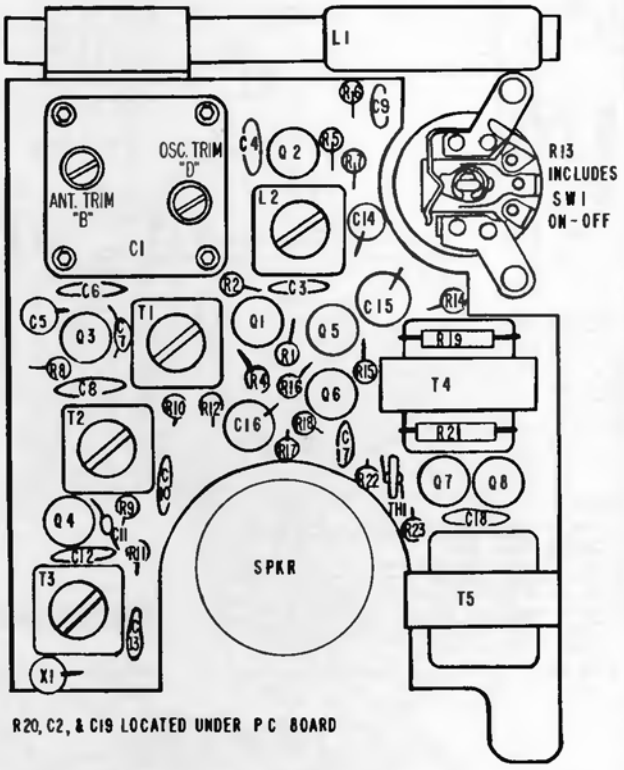

Top View of PC Board.

ALIGNMENT

SIGNAL GENERATOR — Use a generator providing modulated 455KC and AM broadcast frequencies. Connect a 4 or 5 turn loop of wire across output cable. Place the loop near the ferrite core antenna of the receiver. To increase or decrease the amount of signal coupled to the receiver move the loop closer or further from the antenna. Keep the output of the generator low enough to just give an indication on the VTVM or output meter to avoid AVC action. Keep the volume control set at maximum.

INDICATOR — Connect a VTVM or output meter across the voice coil.

RECEIVER — Set the volume control to maximum. During the last three steps be sure that the hand or any objects on the bench do not come in close contact with the antenna loop or detuning will occur and alignment will be incorrect.

ALIGNMENT TOOL — Use a fiber aligning tool that snugly fits the hex shaped hole in the cores of the IF transformers to prevent chipping.

Step	*Loosely coupled modulated signal to:*	*Generator Frequency*	*C1 Setting*	*Adjust for maximum*
1.	Loop L1	455KC	Minimum	T3, T2 and T1 in order. Reduce generator output if necessary for T2 and T1 adjustments.
2.	Loop L1	1650KC	Minimum	Oscillator trimmer "D"
3.	Loop L1	1400KC	1400KC	Ant. trimmer "B"
4.	Loop L1	600KC	600KC	Oscillator coil, L2, if necessary.
5.	Repeat steps 2, 3 & 4.			

WESTINGHOUSE Model H-902P6GP, Chassis V-2461-1, Continued

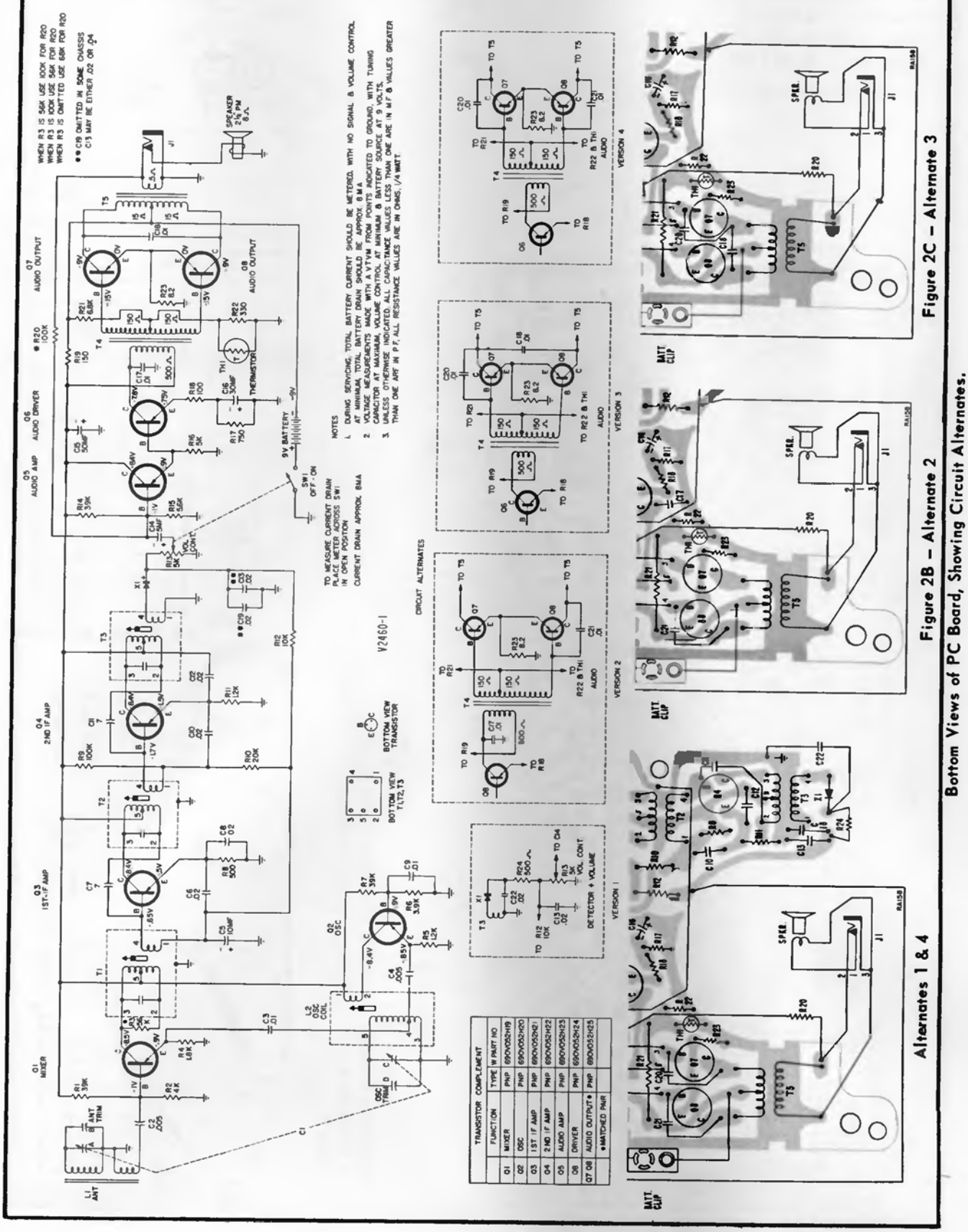

Bottom Views of PC Board, Showing Circuit Alternates.

WESTINGHOUSE
Chassis V-2515-11
Models H-M1780, A,
H-M1781, H-M1783
(Material on 3 pages)

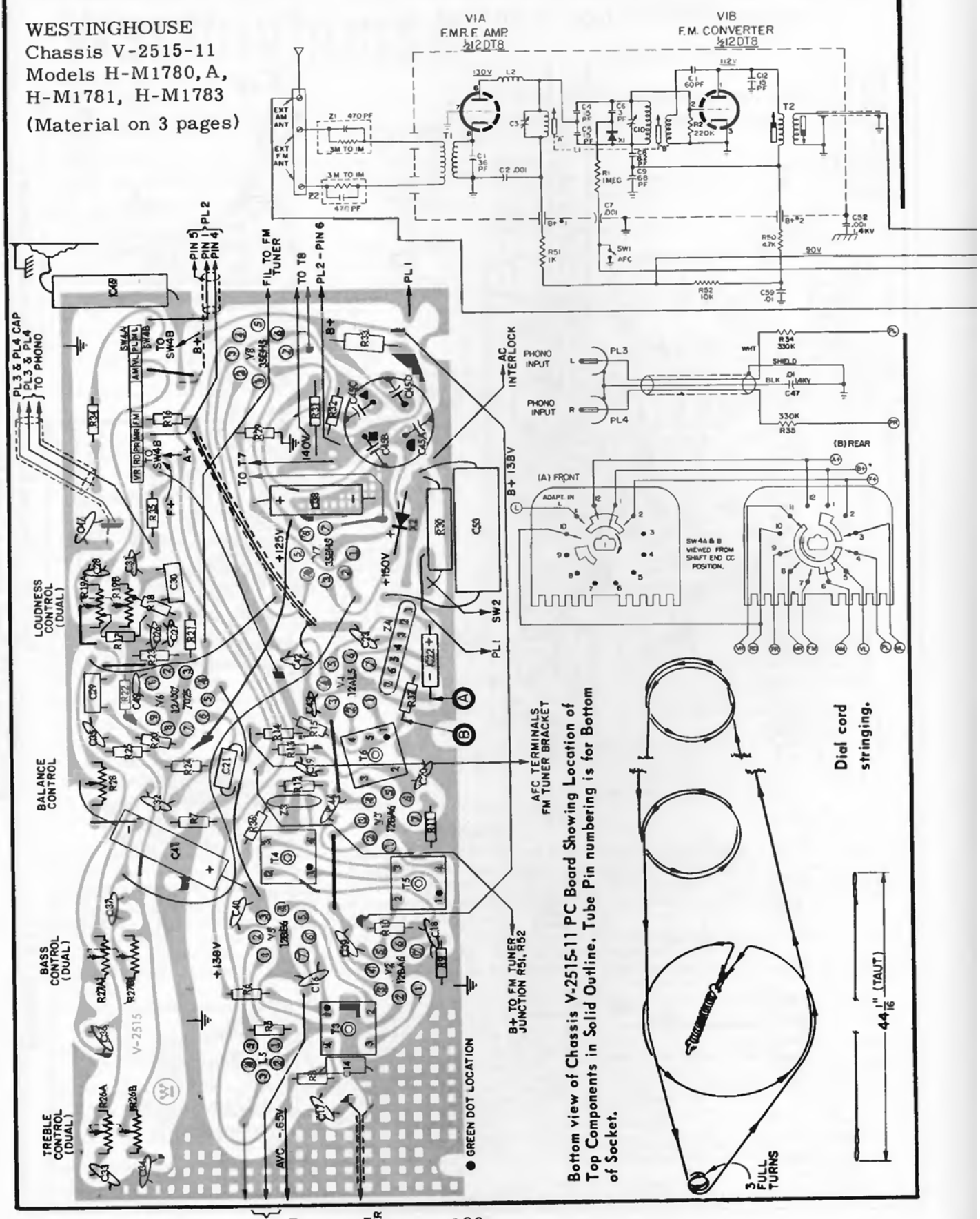

Bottom view of Chassis V-2515-11 PC Board Showing Location of Top Components in Solid Outline. Tube Pin numbering is for Bottom of Socket.

WESTINGHOUSE Chassis V-2515-11, Models H-M1780, A, H-M1781, H-M1783

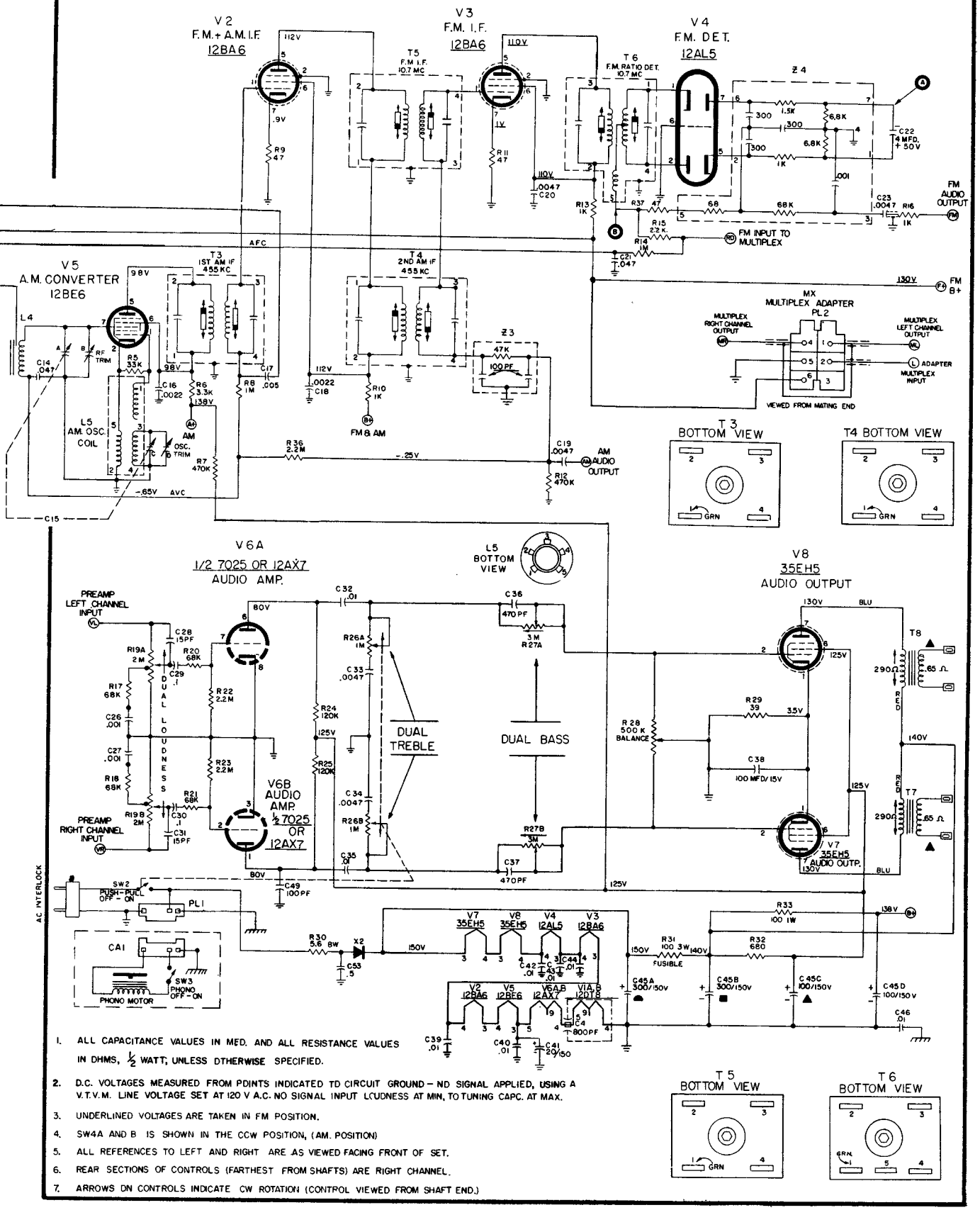

1. ALL CAPACITANCE VALUES IN MFD. AND ALL RESISTANCE VALUES IN OHMS, ½ WATT, UNLESS OTHERWISE SPECIFIED.
2. D.C. VOLTAGES MEASURED FROM POINTS INDICATED TO CIRCUIT GROUND – NO SIGNAL APPLIED, USING A V.T.V.M. LINE VOLTAGE SET AT 120 V A.C. NO SIGNAL INPUT LOUDNESS AT MIN, TO TUNING CAPC. AT MAX.
3. UNDERLINED VOLTAGES ARE TAKEN IN FM POSITION.
4. SW4A AND B IS SHOWN IN THE CCW POSITION, (AM. POSITION)
5. ALL REFERENCES TO LEFT AND RIGHT ARE AS VIEWED FACING FRONT OF SET.
6. REAR SECTIONS OF CONTROLS (FARTHEST FROM SHAFTS) ARE RIGHT CHANNEL.
7. ARROWS ON CONTROLS INDICATE CW ROTATION (CONTROL VIEWED FROM SHAFT END.)

WESTINGHOUSE Chassis V-2515-11, Models H-M1780,A, H-M1781, H-M1783

(Continued)

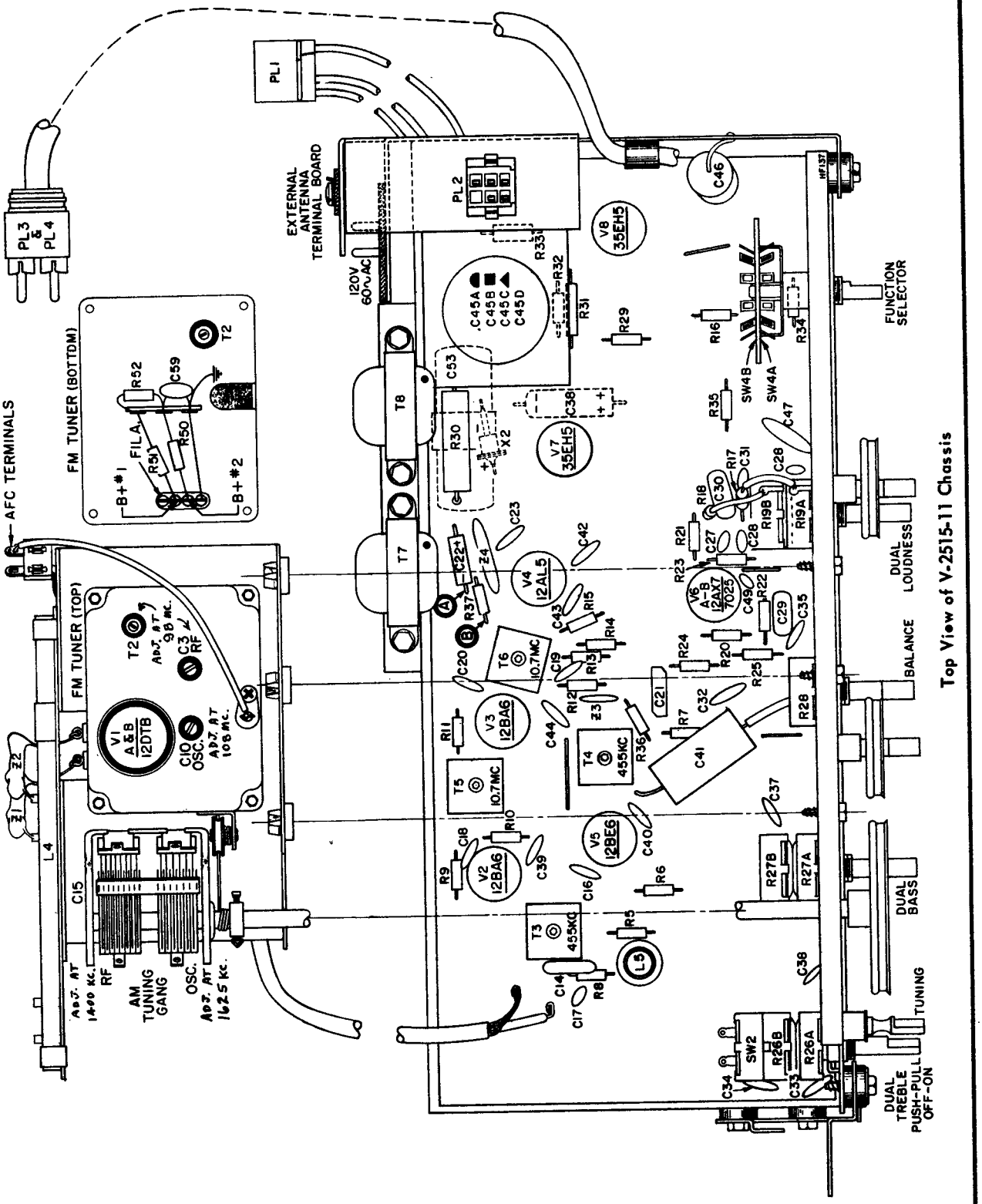

Top View of V-2515-11 Chassis

WESTINGHOUSE Models H-91ACS1, H-120ACS1, H-121ACS1, Chassis V-2524-1
Model H-92ACS1, Chassis V-2524-2
Models H-F1030, H-F1031, H-F1033, Chassis V-2524-3

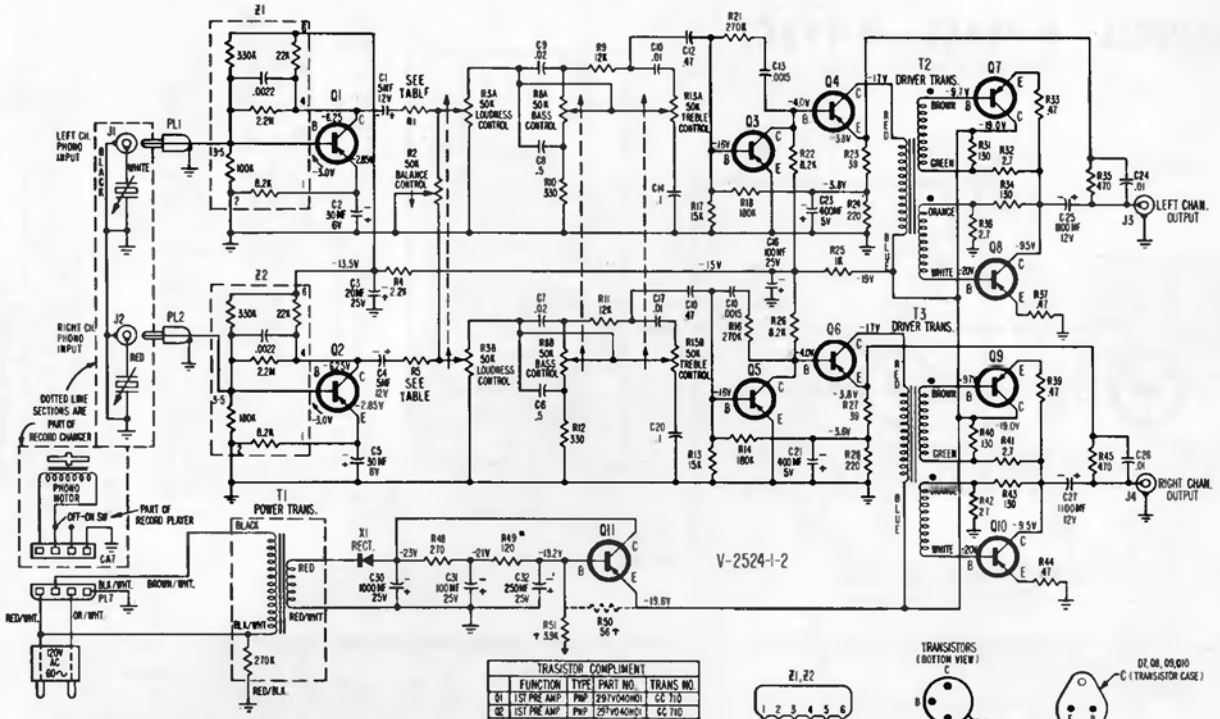

1. ARROWS ON CONTROLS INDICATE CLOCKWISE ROTATION (CONTROLS VIEWED FROM SHAFT END).
2. REAR SECTIONS OF CONTROLS ARE RIGHT CHANNEL.
3. D.C VOLTAGES MESURED FROM CIRCUIT GROUND USING A V.T.V.M. CONTROLS SET AT MINIMUM.
4. ALL CAPACITANCE VALUES ARE IN MFD AND ALL RESISTANCE VALUES IN OHMS, 1/2 WATT UNLESS OTHERWISE SPECIFIED.

• EARLY PRODUCTION WAS 270 OHMS; 120 USED WITH R51.
+ R50 RESISTOR USED IN EARLY PRODUCTION ONLY; R51 LATER PROD. ONLY.

TRASISTOR COMPLIMENT			
FUNCTION	TYPE	PART NO.	TRANS NO.
1ST PRE AMP	PNP	297V040H01	GC 710
1ST PRE AMP	PNP	297V040H01	GC 710
2ND PRE AMP	PNP	297V040H01	GC 710
AUDIO DRIVER	PNP	297V040H13	GC 676
2ND PRE AMP	PNP	297V040H01	GC 710
AUDIO DRIVER	PNP	297V040H13	GC 676
AUDIO OUT	PNP	297V041H01	B1709
AUDIO OUT	PNP	297V041H01	B1709
AUDIO OUT	PNP	297V041H01	B1709
AUDIO OUT	PNP	297V041H01	B1709
C MULTIPLIER	PNP	297V041H01	B1709

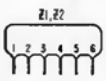

CHASSIS NO.	R1	R5
V-2524-1-2	560Ω	560Ω
U-2524-3	2700Ω	2700Ω

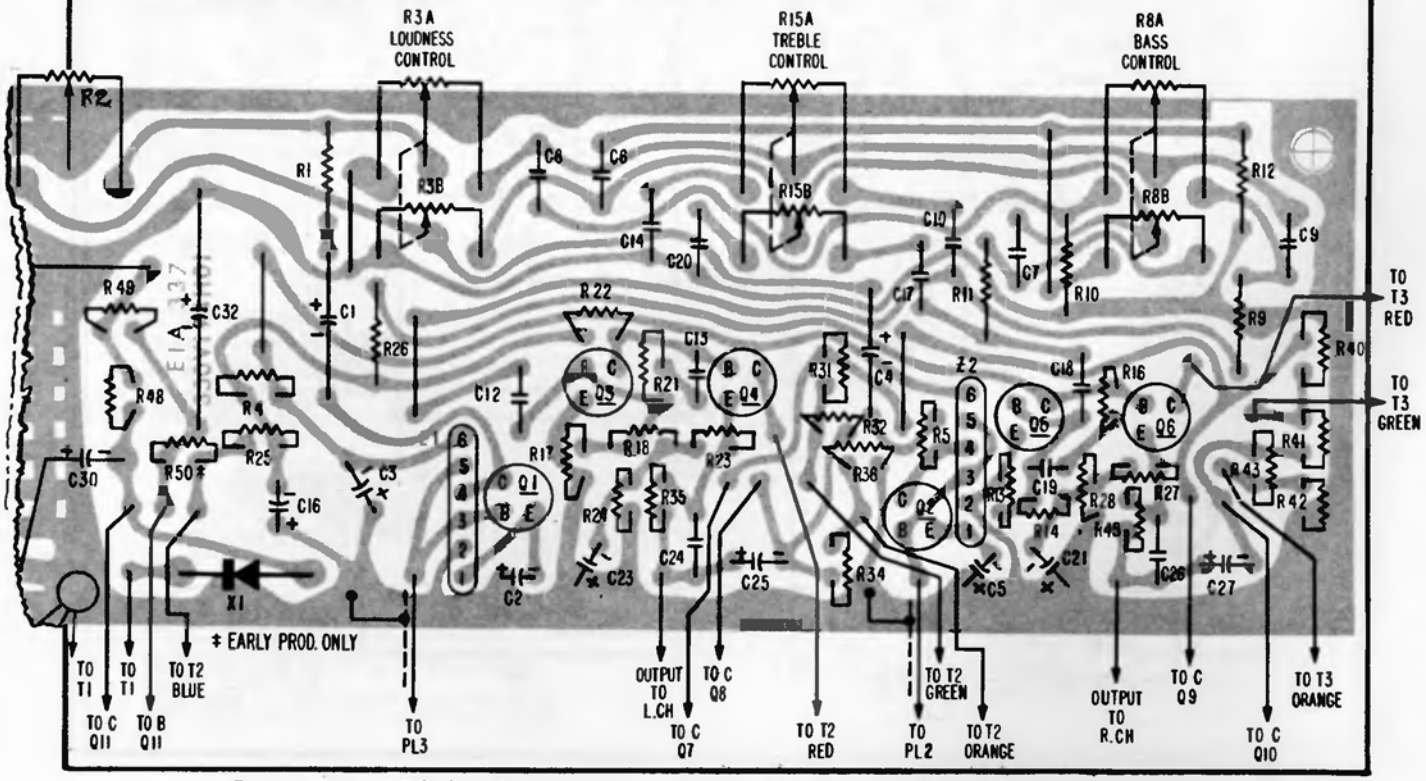

Bottom view of PC board.

Westinghouse

CHASSIS V-2526-1

MODELS H-99AC1 *charcoal gray* **H-99AC2** *olive green*

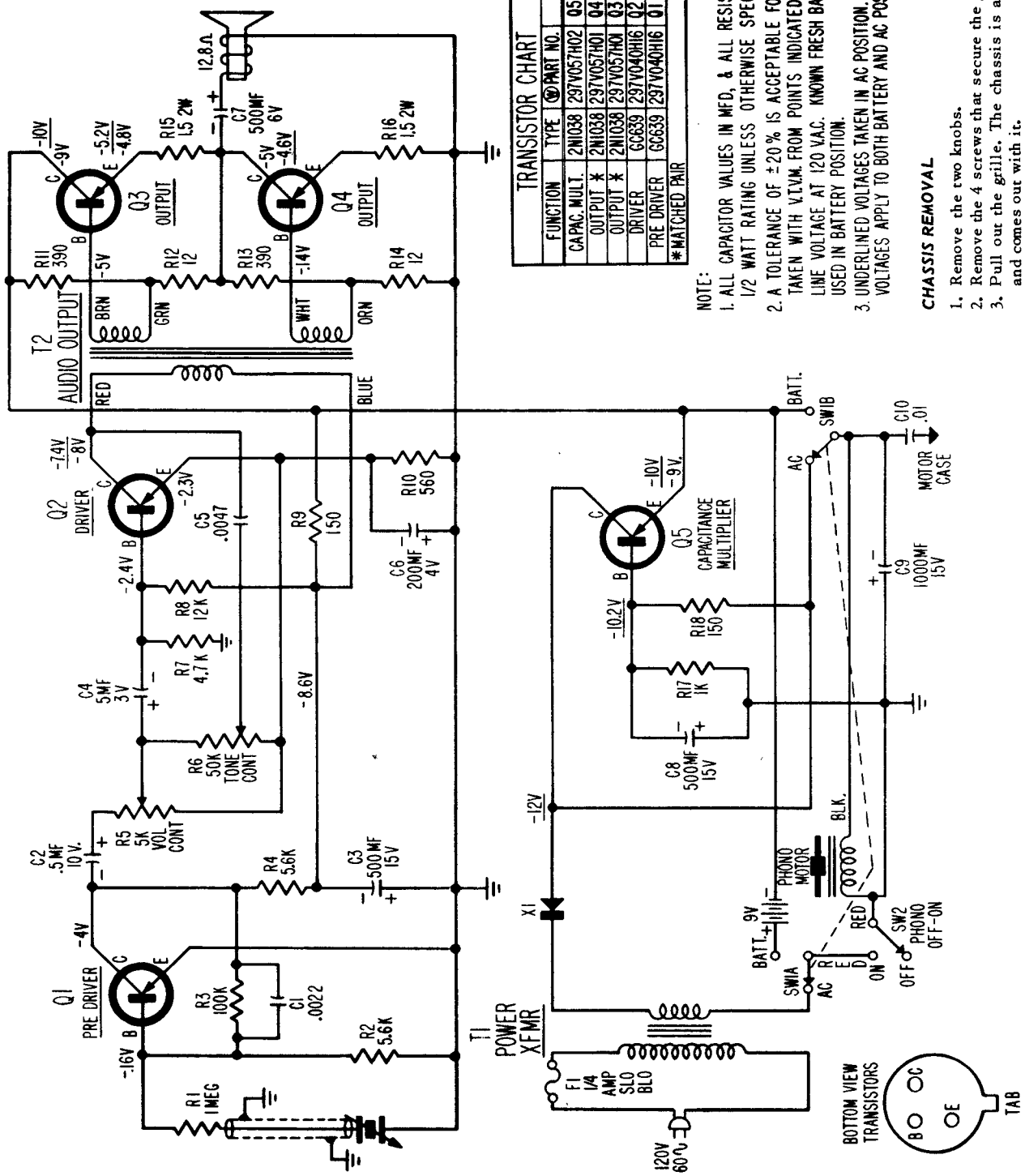

TRANSISTOR CHART			
FUNCTION	TYPE	ⓦPART NO.	ALT. TYPE
CAPAC. MULT.	2N1038	297V057H02	Q5
OUTPUT *	2N1038	297V057H01	Q4
OUTPUT *	2N1038	297V057H01	Q3
DRIVER	GC639	297V040H16	Q2
PRE DRIVER	GC639	297V040H16	Q1
*MATCHED PAIR			

NOTE:
1. ALL CAPACITOR VALUES IN MFD, & ALL RESISTORS IN OHMS 1/2 WATT RATING UNLESS OTHERWISE SPECIFIED.
2. A TOLERANCE OF ±20% IS ACCEPTABLE FOR VOLTAGES TAKEN WITH V.T.V.M. FROM POINTS INDICATED TO ⏚ WITH LINE VOLTAGE AT 120 V.A.C. KNOWN FRESH BATTRIES MUST BE USED IN BATTERY POSITION.
3. UNDERLINED VOLTAGES TAKEN IN AC POSITION. ALL OTHER VOLTAGES APPLY TO BOTH BATTERY AND AC POSITIONS.

CHASSIS REMOVAL

1. Remove the two knobs.
2. Remove the 4 screws that secure the grille.
3. Pull out the grille. The chassis is attached to the grille and comes out with it.

WESTINGHOUSE Chassis V-2534-2, Model H-107ACS1

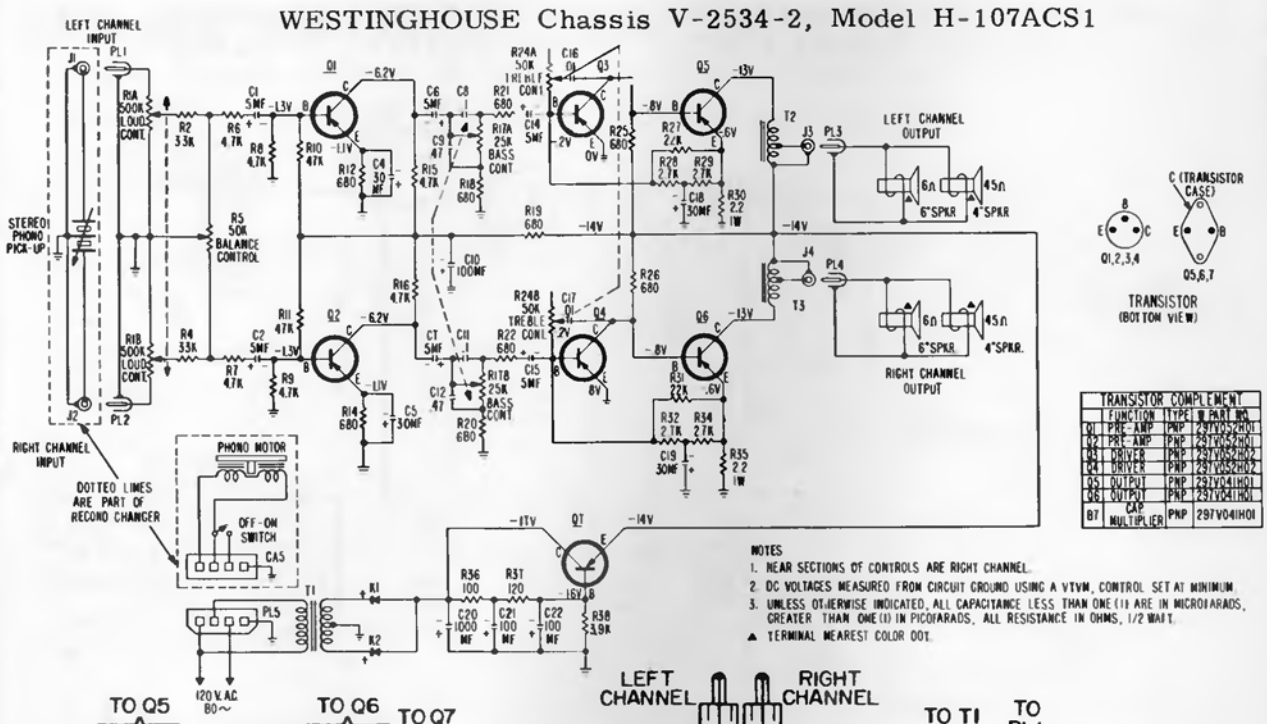

TRANSISTOR COMPLEMENT			
	FUNCTION	TYPE	PART NO.
Q1	PRE-AMP	PNP	297V052H01
Q2	PRE-AMP	PNP	297V052H01
Q3	DRIVER	PNP	297V052H02
Q4	DRIVER	PNP	297V052H02
Q5	OUTPUT	PNP	297V041H01
Q6	OUTPUT	PNP	297V041H01
B7	CAP MULTIPLIER	PNP	297V041H01

NOTES
1. NEAR SECTIONS OF CONTROLS ARE RIGHT CHANNEL.
2. DC VOLTAGES MEASURED FROM CIRCUIT GROUND USING A VTVM, CONTROL SET AT MINIMUM.
3. UNLESS OTHERWISE INDICATED, ALL CAPACITANCE LESS THAN ONE (1) ARE IN MICROFARADS, GREATER THAN ONE (1) IN PICOFARADS. ALL RESISTANCE IN OHMS, 1/2 WATT.
▲ TERMINAL NEAREST COLOR DOT.

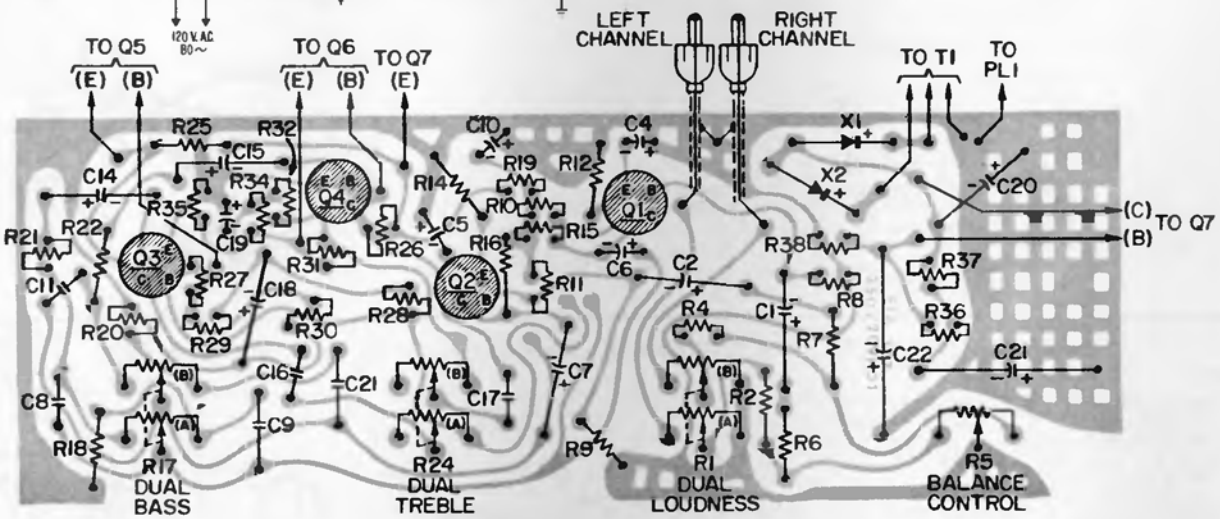

WESTINGHOUSE Chassis V-2537-2
Models H-105ACS1, A, H-106ACS1

CHASSIS REMOVAL

1. Remove the VOLUME knobs.
2. Remove the six screws from the baffle.
3. Remove the escutcheon and the two screws under it.
4. Pull out the baffle. The chassis is fastened to the baffle by two speed nuts.

TRANSISTOR COMPLEMENT			
	FUNCTION	TYPE	PART NO
Q1 - Q2	DRIVER	NPN	297VD59H01
Q3 - Q4	AUDIO OUTPUT	NPN	297VDE0H01

SEE NOTE 3

Q1 - Q2

Q3 - Q4

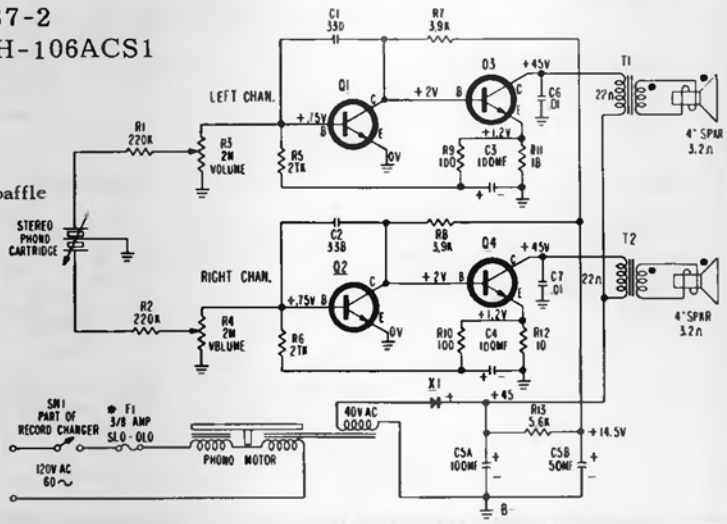

NOTES
* EARLY PRODUCTION ONLY.
1. VOLTAGE MEASUREMENTS MADE WITH A VTVM FROM POINTS INDICATED TO GROUND, VOLUME CONTROLS AT MINIMUM, LINE VOLTAGE AT 120 V AC
2. UNLESS OTHERWISE INDICATED: ALL CAPACITANCE VALUES LESS THAN 1 ARE MF & VALUES GREATER THAN 1 ARE IN PF. ALL RESISTANCE VALUES ARE IN OHMS, 1/2 WATT.
3. IF EITHER RIGHT OR LEFT CHANNEL DRIVER OR OUTPUT TRANSISTOR BECOMES DEFECTIVE, ORDER AND REPLACE BOTH DRIVER OR BOTH OUTPUT TRANSISTORS.

WESTINGHOUSE Chassis V-2537-1, Models H-100AC1, H-100AC2
Chassis V-2537-3, Models H-111MP1, H-111MP2

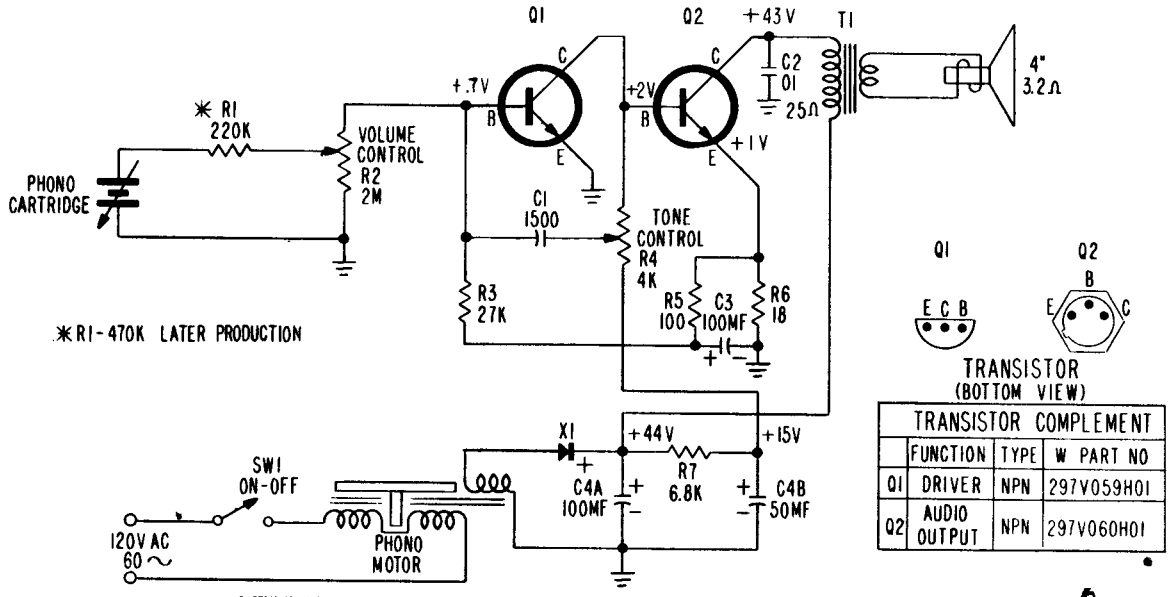

TRANSISTOR
(BOTTOM VIEW)

TRANSISTOR COMPLEMENT			
	FUNCTION	TYPE	W PART NO
Q1	DRIVER	NPN	297V059H01
Q2	AUDIO OUTPUT	NPN	297V060H01

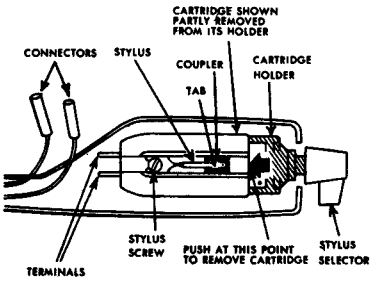

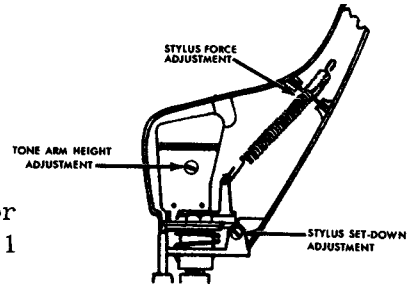

Adjustments for
Chassis V-2537-1

WESTINGHOUSE Chassis V-2536-1, Models H-102ACS1, H-102ACS2

NOTES

1. VOLTAGE MEASUREMENTS MADE WITH A VTVM FROM POINTS INDICATED TO GROUND, VOLUME CONTROLS AT MINIMUM, LINE VOLTAGE AT 120 V.A.C.
2. UNLESS OTHERWISE INDICATED: ALL CAPACITANCE VALUES LESS THAN 1 ARE MF & VALUES GREATER THAN 1 ARE IN PF, ALL RESISTANCE VALUES ARE IN OHMS, 1/2 WATT.
3. IF EITHER RIGHT OR LEFT CHANNEL DRIVER OR OUTPUT TRANSISTOR BECOMES DEFECTIVE, ORDER AND REPLACE BOTH DRIVER OR BOTH OUTPUT TRANSISTORS.

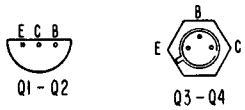

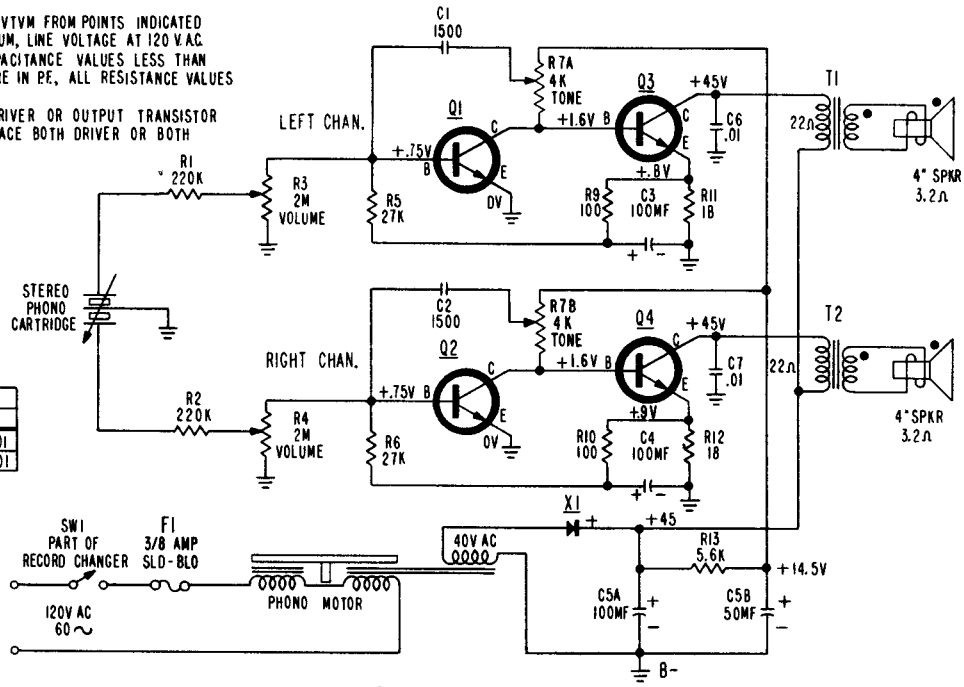

TRANSISTOR COMPLEMENT			
	FUNCTION	TYPE	PART NO
Q1 - Q2	DRIVER	NPN	297V059H01
Q3 - Q4	AUDIO OUTPUT	NPN	297V060H01

SEE NOTE 3

ZENITH RADIO MODELS L513C,F,V & W AND L514C,P,W & G USING CHASSIS 5L02

Also Models L509J, L, W, Chassis 5J13 (less Clock) are similar to 5L02

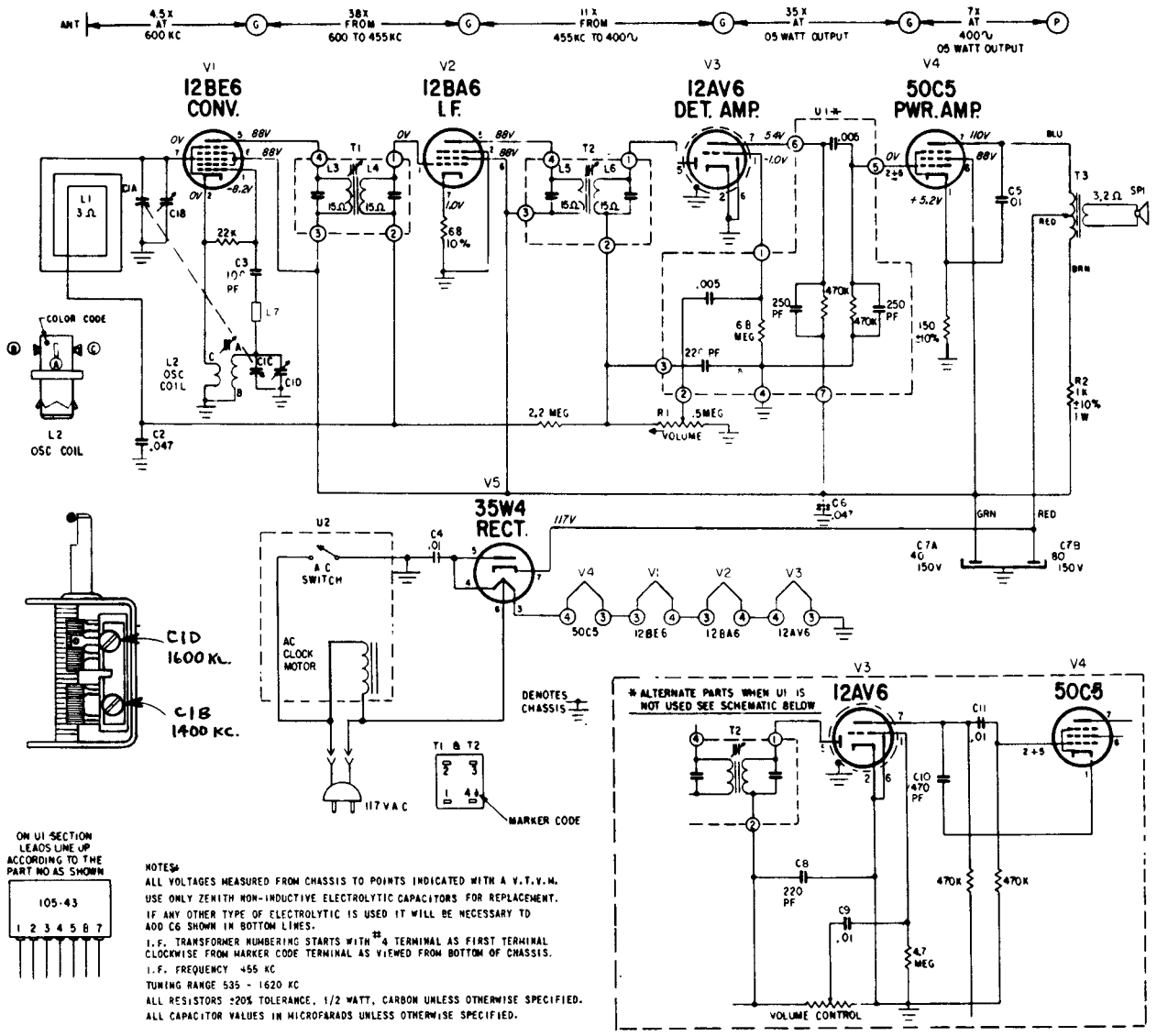

NOTES:
ALL VOLTAGES MEASURED FROM CHASSIS TO POINTS INDICATED WITH A V.T.V.M.
USE ONLY ZENITH NON-INDUCTIVE ELECTROLYTIC CAPACITORS FOR REPLACEMENT.
IF ANY OTHER TYPE OF ELECTROLYTIC IS USED IT WILL BE NECESSARY TO ADD C6 SHOWN IN BOTTOM LINES.
I.F. TRANSFORMER NUMBERING STARTS WITH #4 TERMINAL AS FIRST TERMINAL CLOCKWISE FROM MARKER CODE TERMINAL AS VIEWED FROM BOTTOM OF CHASSIS.
I.F. FREQUENCY 455 KC
TUNING RANGE 535 - 1620 KC
ALL RESISTORS ±20% TOLERANCE, 1/2 WATT, CARBON UNLESS OTHERWISE SPECIFIED.
ALL CAPACITOR VALUES IN MICROFARADS UNLESS OTHERWISE SPECIFIED.

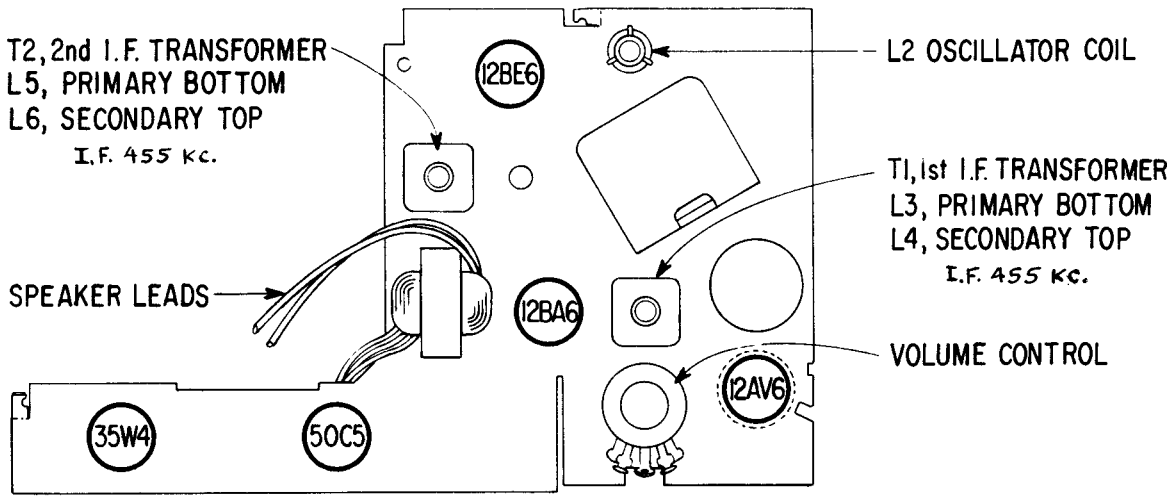

ZENITH RADIO CORPORATION MODELS L615G, L &W CHASSIS 6L05

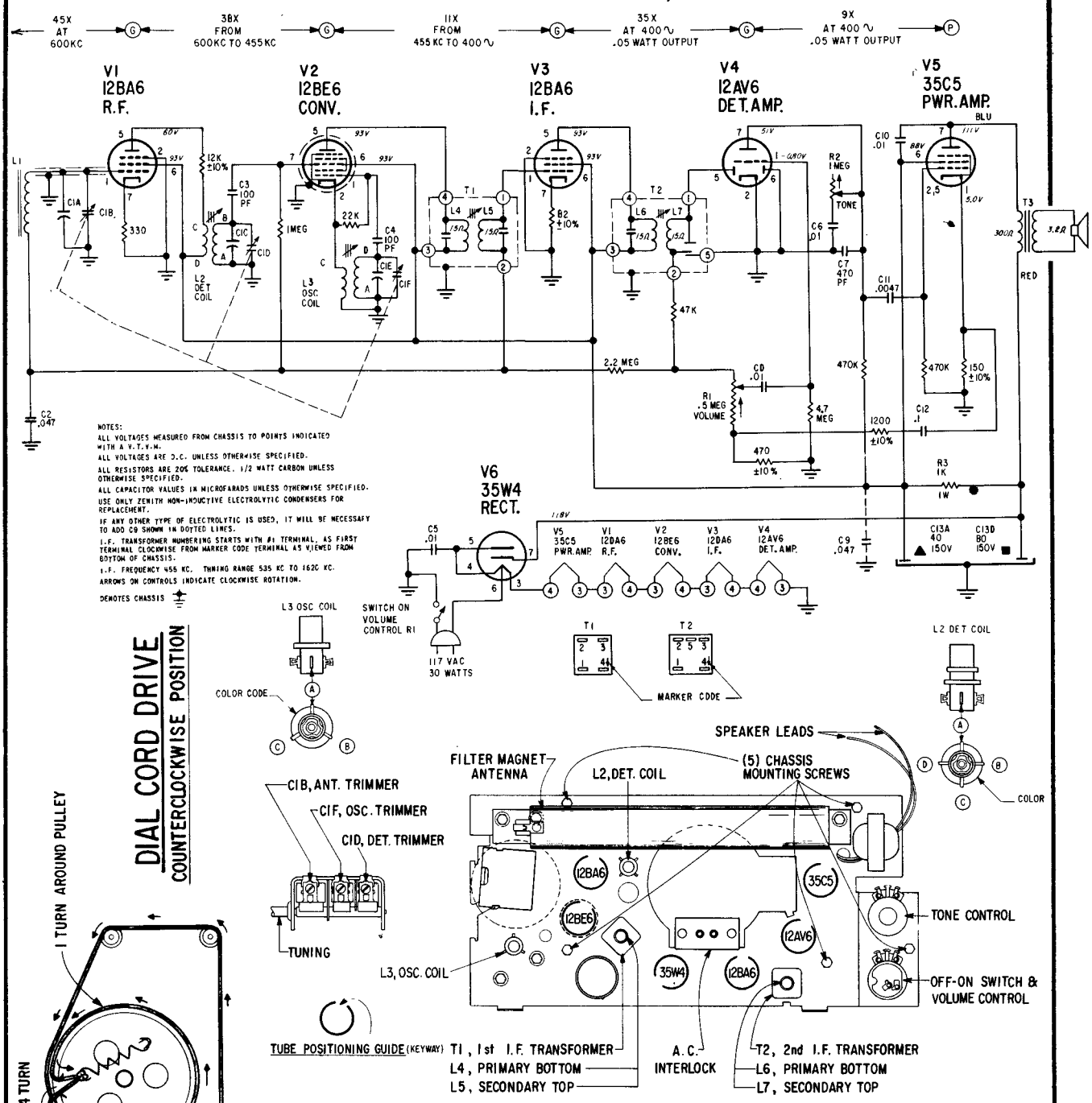

ALIGNMENT PROCEDURE

Operation	Connect Oscillator To	Dummy Antenna	Input Sig. Frequency	Set Dial At	Trimmers	Purpose
1	Converter Grid	.5 Mfd.	455 Kc.	600 Kc	L4, L5, L6, L7	For I.F. Alignment.
2	One Turn Loop Coupled Loosely to Wave Magnet	—	1600 Kc.	1600 Kc.	C1F	Set Oscillator to Dial Scale
3		—	1400 Kc.	1400 Kc.	C1D, C1B	Align Detector and Antenna Stage

ZENITH RADIO MODEL M722C, L & W CHASSIS 6M06

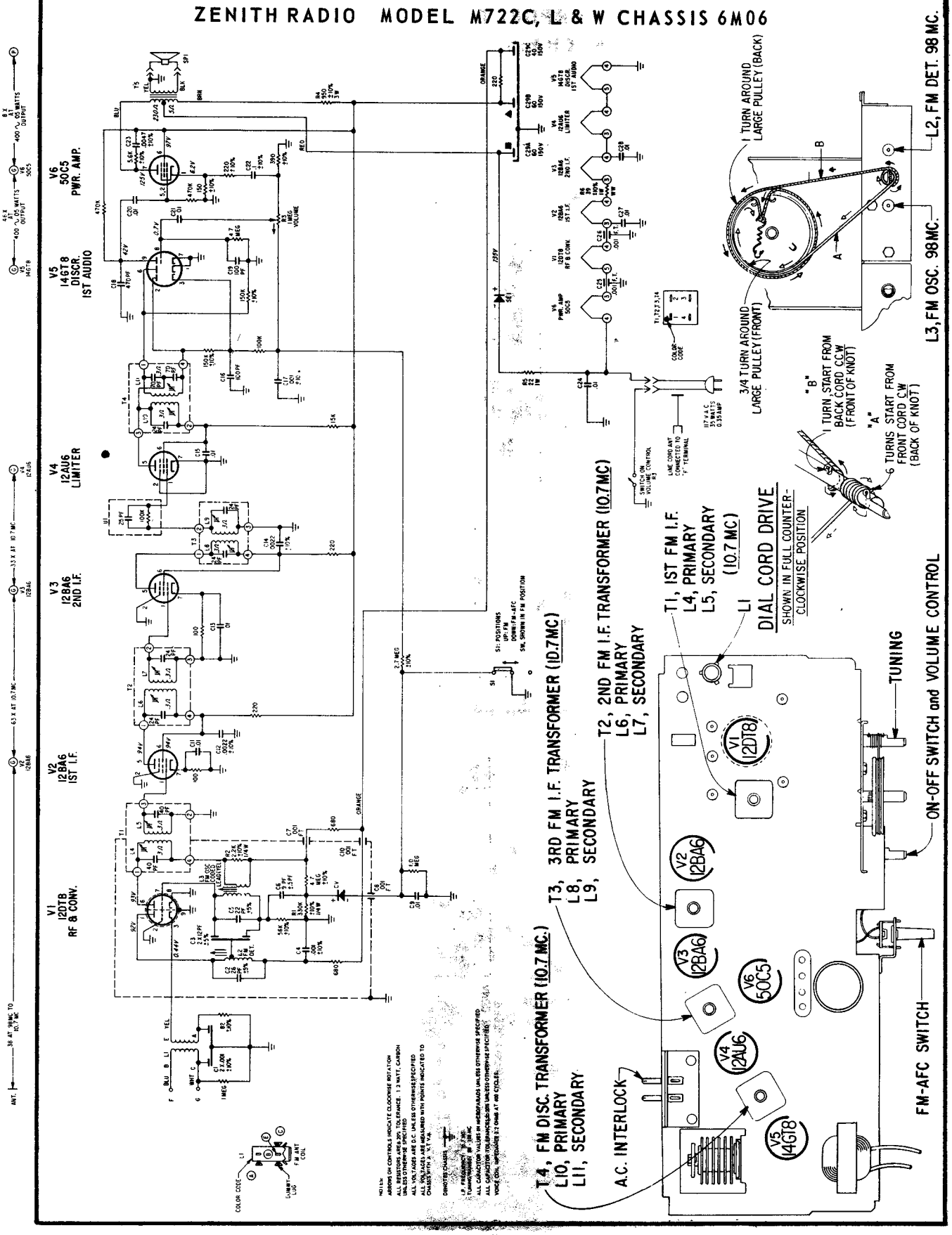

ZENITH RADIO CORPORATION
MODEL L724C, L&W CHASSIS 7L02

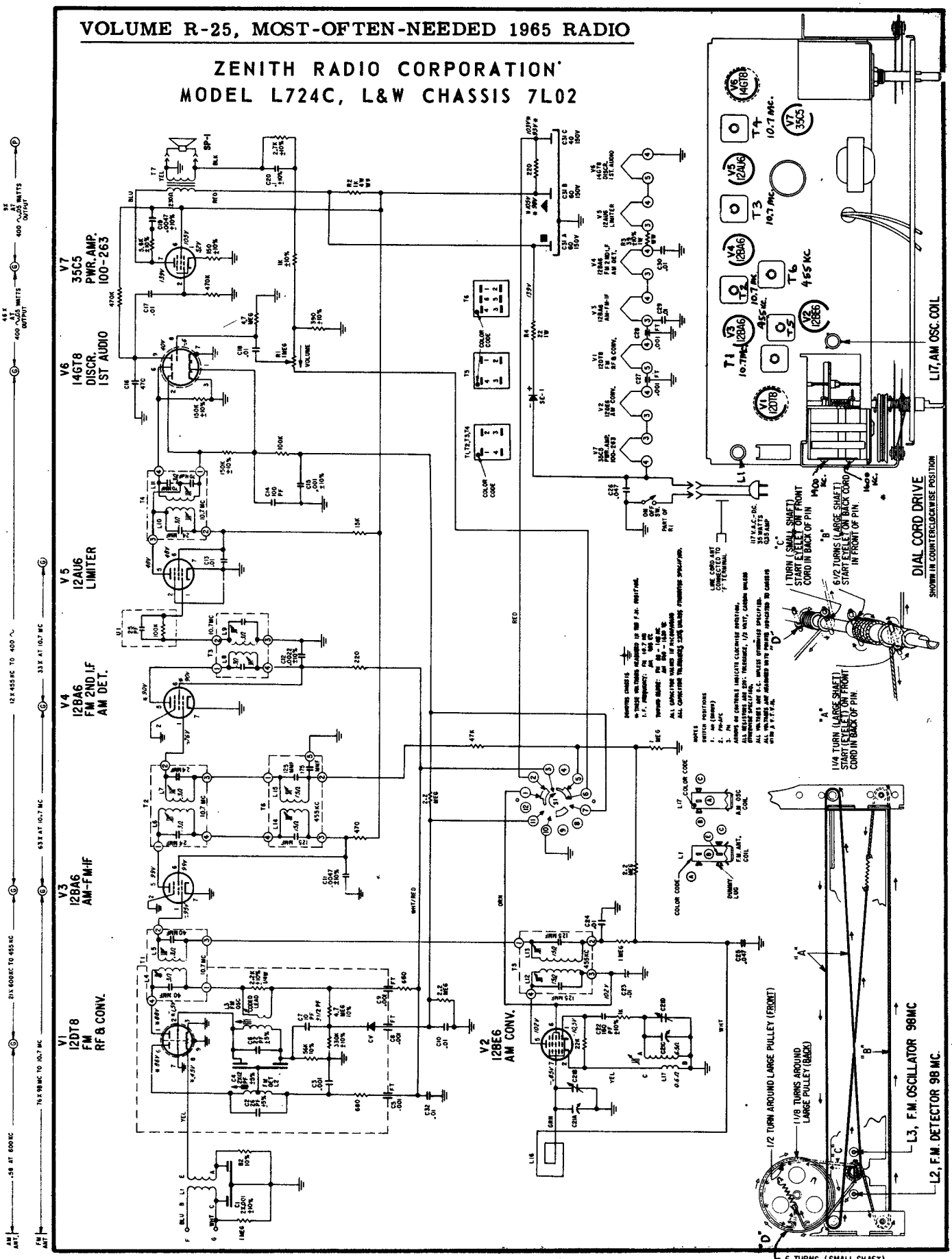

ZENITH RADIO Models M723A, C, W, Chassis 7M04,
Clock Models L727C, L, W, Chassis 7L03, are almost identical.

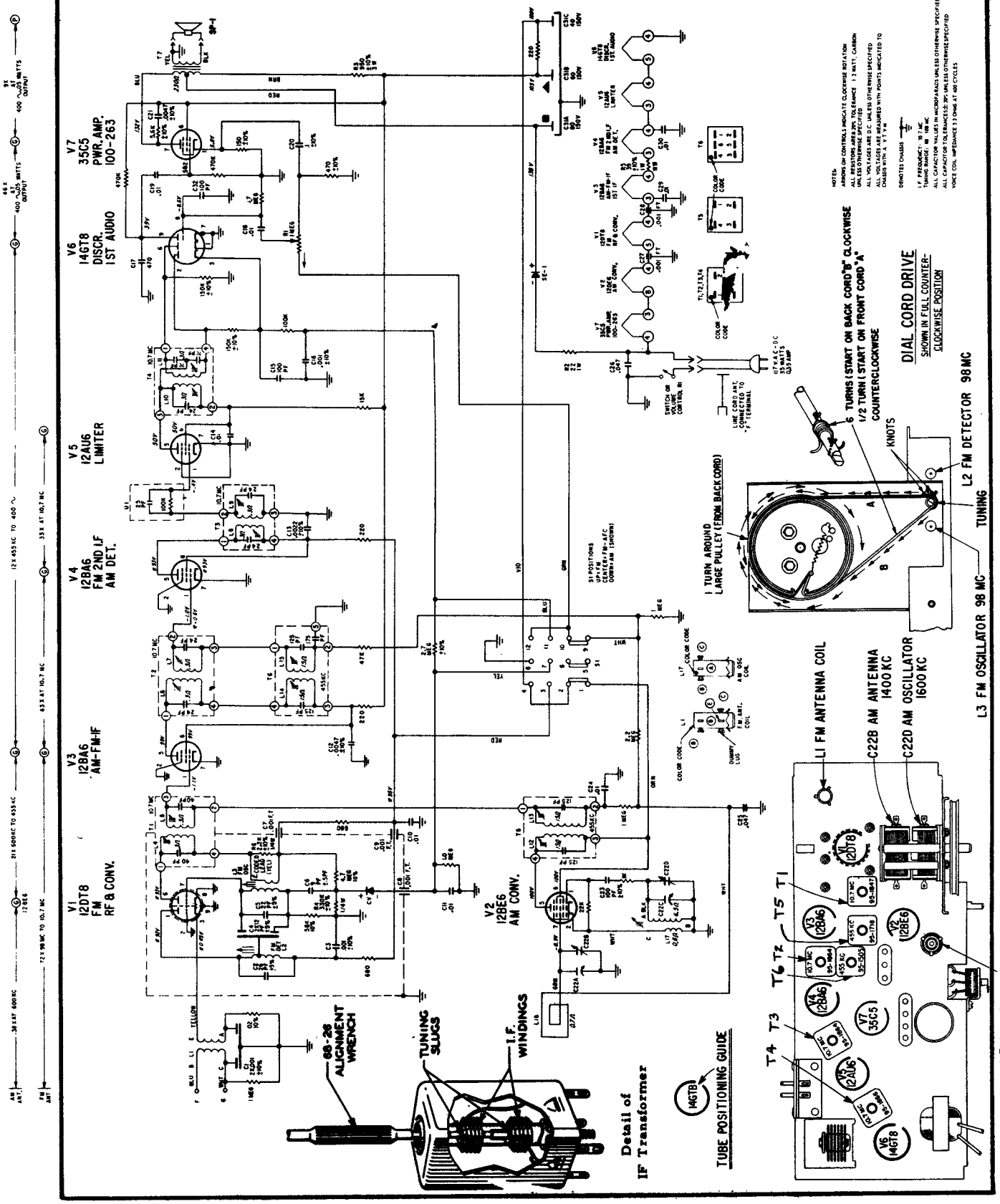

ZENITH RADIO MODEL "ROYAL 645L"

CHASSIS 6LT45Z2

(Continued on the next page, at right)

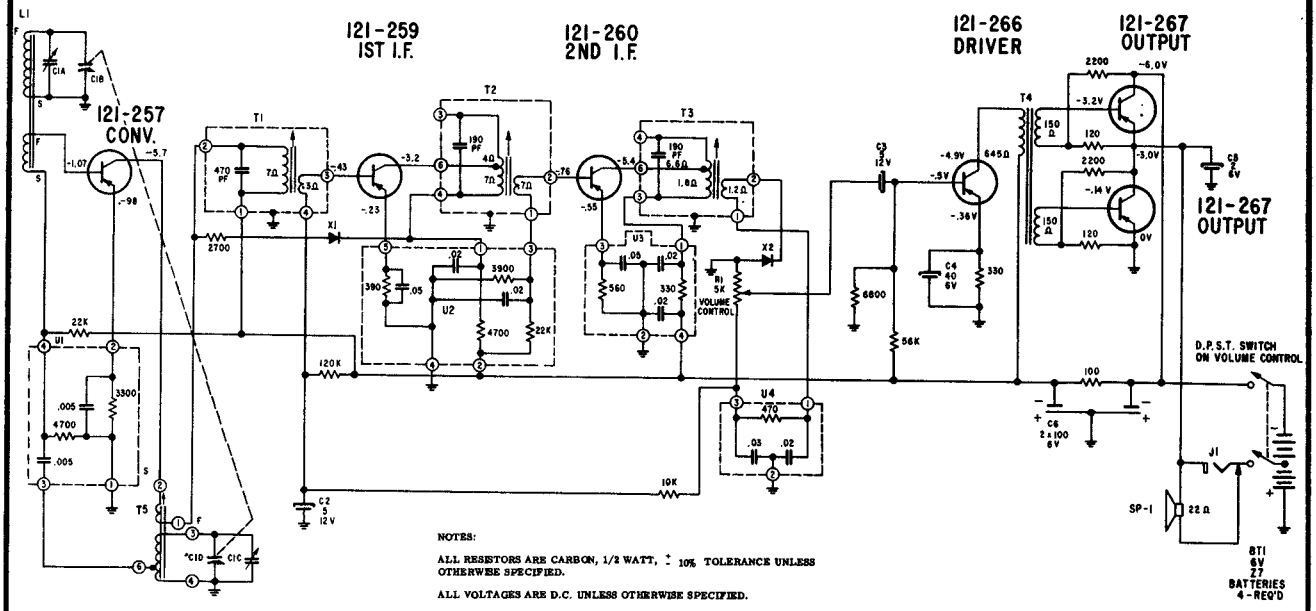

NOTES:

ALL RESISTORS ARE CARBON, 1/2 WATT, ± 10% TOLERANCE UNLESS OTHERWISE SPECIFIED.

ALL VOLTAGES ARE D.C. UNLESS OTHERWISE SPECIFIED.

ALL CONDENSERS ARE IN MICROFARADS UNLESS OTHERWISE SPECIFIED.

D.C. VOLTAGES SHOWN ARE MEASURED FROM CHASSIS WITH NO SIGNAL USING A VACCUM TUBE VOLTMETER.

DENOTES CHASSIS ⏚

BATTERY CURRENT DRAIN APPROX. 7 MA WITH VOLUME CONTROL AT MINIMUM.

SPEAKER IMPEDANCE 22Ω AT 400 CPS.

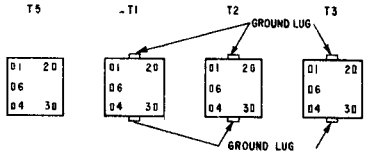

PNP TRANSISTORS

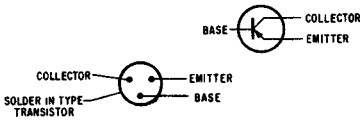

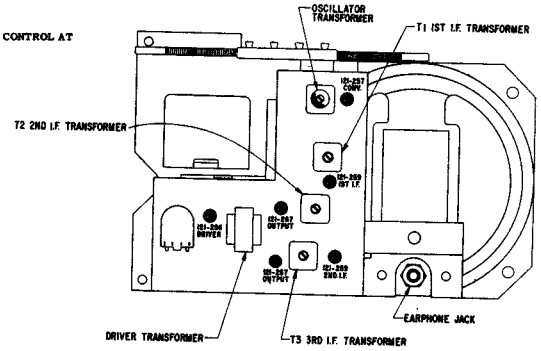

ALIGNMENT PROCEDURE

Operation	Input Signal Frequency	Connect Inner Conductor From Oscillator To	Connect Outer Shield Conductor From Oscillator To	Set Dial At	Trimmers	Purpose
1	455 KC	ONE TURN LOOSELY COUPLED TO WAVEMAGNET	Chassis	600 KC	Adj. T1, T2, T3 for maximum output.	For I.F. Alignment
2	1620 KC		—	Gang wide open.	C1C	Set Oscillator to dial scale.
3	535 KC		—	Gang Closed	Adjust slug in T6	Set Oscillator to dial scale.
4	REPEAT STEPS 2 & 3		—	—	—	—
5	1260 KC		—	1260 KC	C1A	Align loop ant.

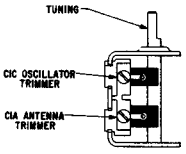

TRANSISTOR INFORMATION CHART

Chassis	Part No.	Conv.	1st I.F.	2nd I.F.	Crystal Diode	Driver	Output-Output	Supplier
6LT45Z2	Zenith Type E.I.A.	121-257 PNP 2N1526	121-259 PNP 2N1524	121-260 PNP 2N1524	103-44	121-266 PNP 2N406	121-267 Pair PNP PNP 2N408	R.C.A.

ZENITH RADIO Model Royal 645L, Chassis 6LT45Z2
(Continued from preceding page, at left)

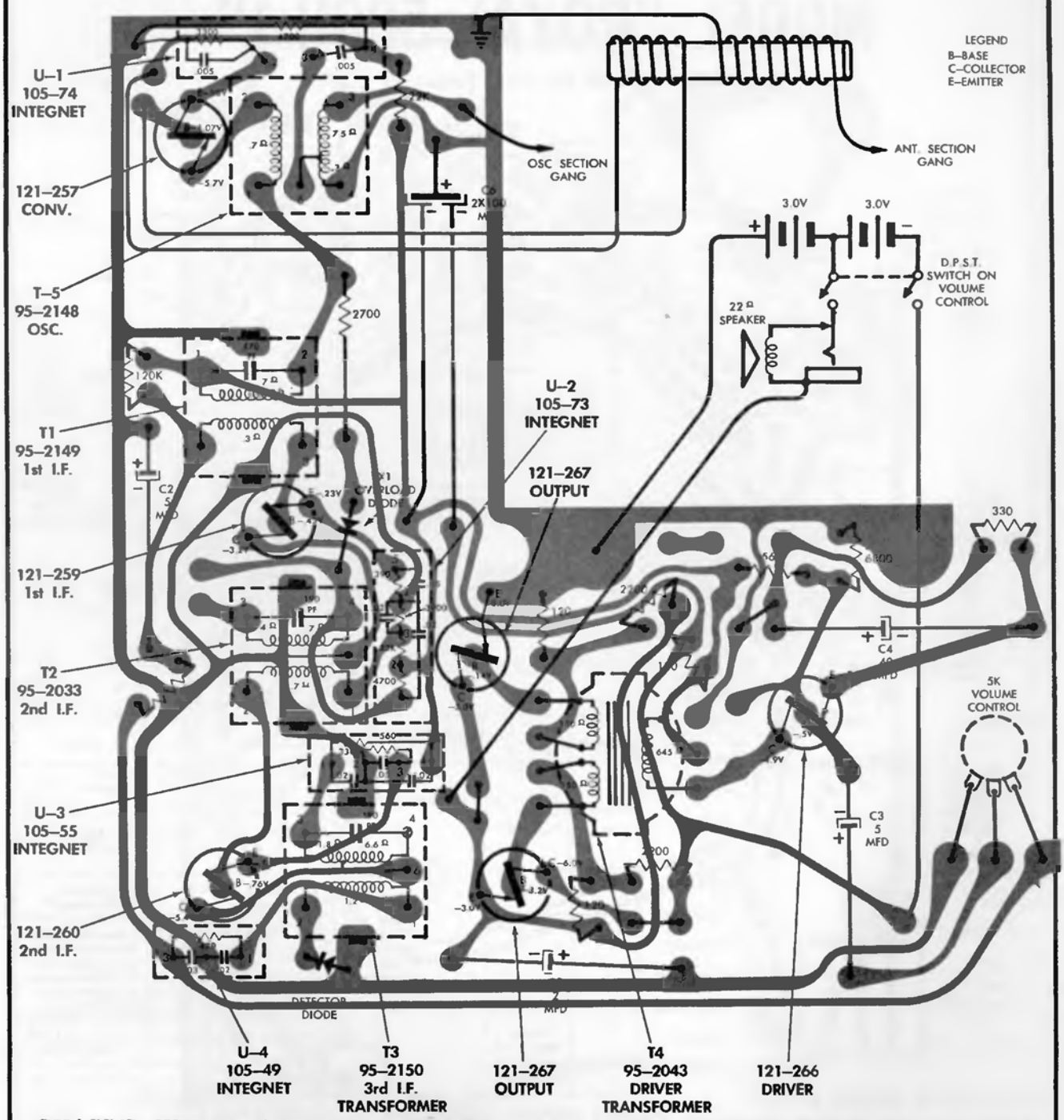

CHASSIS, WIRING AND COMPONENTS — VIEWED FROM WIRING SIDE

Resistors and capacitors should be replaced by clipping out the defective part and neatly soldering in the new part. If a unit, such as the oscillator coil or I.F. transformer, is to be removed heat the mounting lugs with a pencil type soldering iron and move them away from the soldered connection with a long-nose pliers or metal pick. Continue heating the lugs and brush away the molten solder with a small stiff glue brush. Remove the defective unit by lifting it off the chassis. Before inserting the new unit, be certain that the lug holes are open and free from solder. Forcing a lug against a solder filled lug hole may break the bond between the chassis base and the printed wiring. It is, therefore, necessary to exercise care when replacing units.

ZENITH RADIO CHASSIS 8LT40ZI

MODEL "ROYAL 500H-1"

(Continued on the next page, at right)

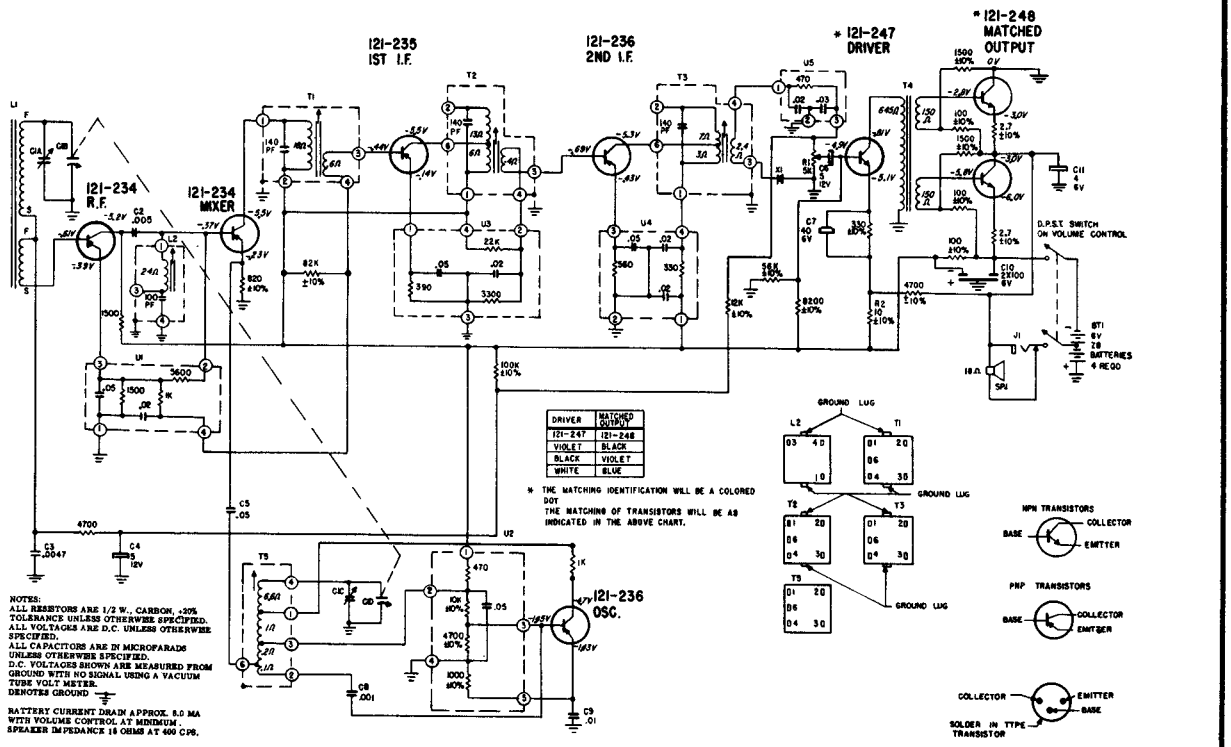

DRIVER	MATCHED OUTPUT
121-247	121-248
VIOLET	BLACK
BLACK	VIOLET
WHITE	BLUE

* THE MATCHING IDENTIFICATION WILL BE A COLORED DOT
THE MATCHING OF TRANSISTORS WILL BE AS INDICATED IN THE ABOVE CHART.

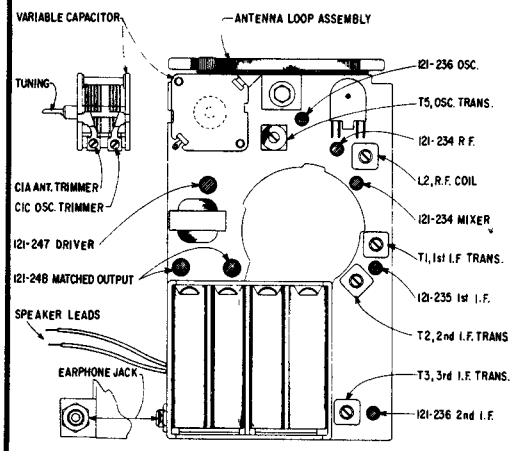

TRANSISTOR & TRIMMER LAYOUT

ALIGNMENT PROCEDURE

Operation	Input Signal Frequency	Connect Inner Conductor From Oscillator To	Set Dial At	Trimmers	Purpose
1	455 KC	ONE TURN LOOSELY COUPLED TO THE ANTENNA	600 KC	Adj. T1, T2 T3 for Maximum output	For I.F. Alignment
2	455 KC		600 KC	Adj. L2 for Minimum output	Tune Trap to IF Frequency
3	1620 KC		Gang Wideopen	C1C	Set Oscillator To Dial Scale
4	600 KC		Near 600	Adjust slug in T5	Adjust T5 for Maximum output while rocking gang. Tune T5 for Maximum output regardless of dial accuracy
5	Repeat Steps 3 & 4		———	———	———
6	1260 KC		1260 KC	C1A	Align Loop Antenna

CHASSIS INFORMATION CHART

CHASSIS	PART NO.	R.F.	MIXER	OSC.	1ST I.F.	2ND I.F.	CRYSTAL DIODE DETECTOR	DRIVER	OUTPUT-OUTPUT	SUPPLIER
8LT40Z1	Zenith Type E.I.A.	121-234 PNP GC282	121-234 PNP GC282	121-236 PNP GC284	121-235 PNP GC284	121-236 PNP GC284	103-19 or 103-44	121-247 NPN GC608	121-248 Pair NPN NPN GC609	Texas Instrument

ZENITH RADIO Model "Royal 500H-1" -- Chassis 8LT40Z1
(Continued from preceding page, at left)

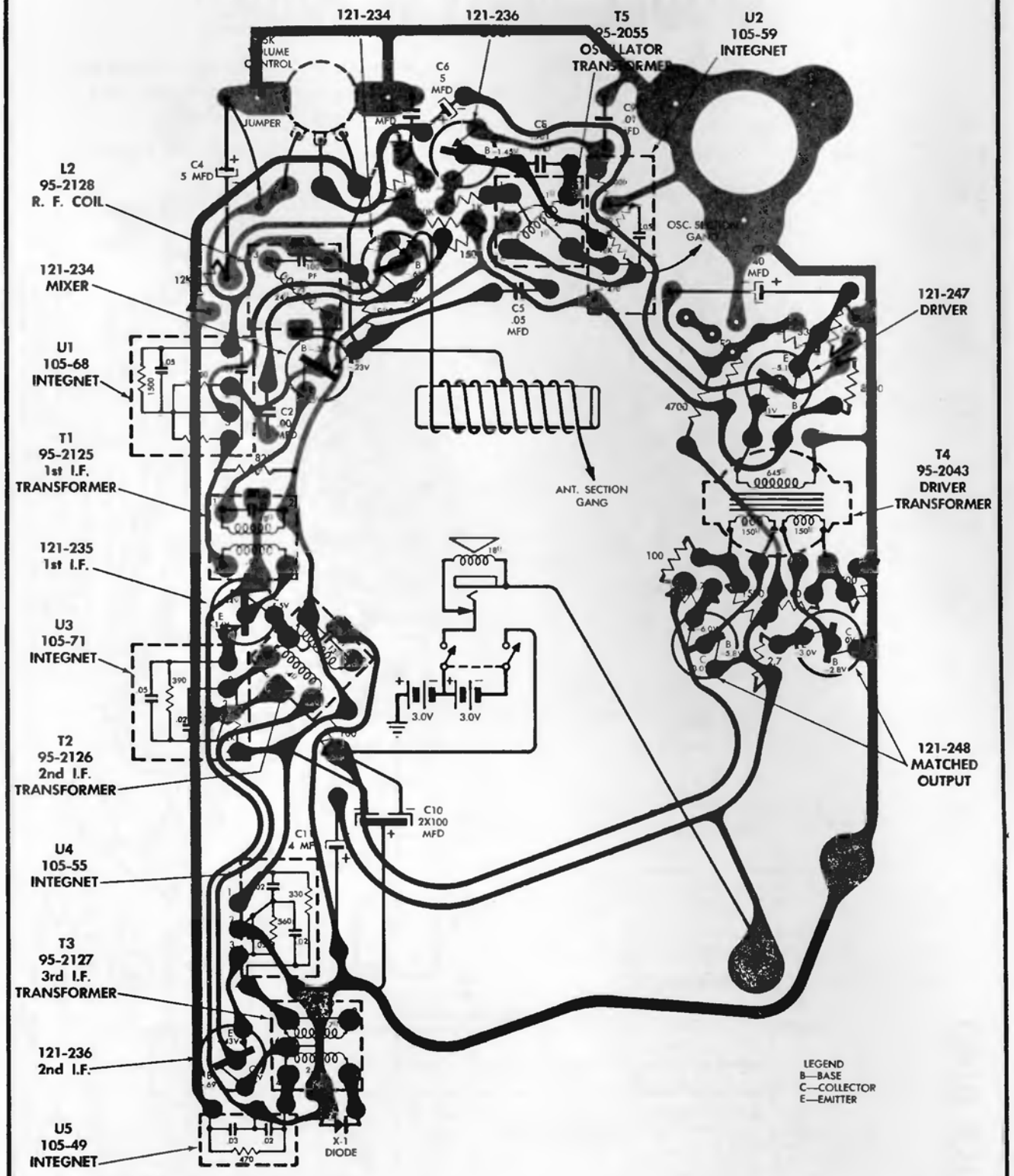

CHASSIS, WIRING AND COMPONENTS

VIEWED FROM WIRING SIDE

ZENITH RADIO CHASSIS 8LT45Z1 & 45Z3

MODEL "ROYAL 500L"

Exact material for 8LT45Z3; Chassis 8LT45Z1 is practically the same, but uses some different transistors.

(Continued on the next page, at right)

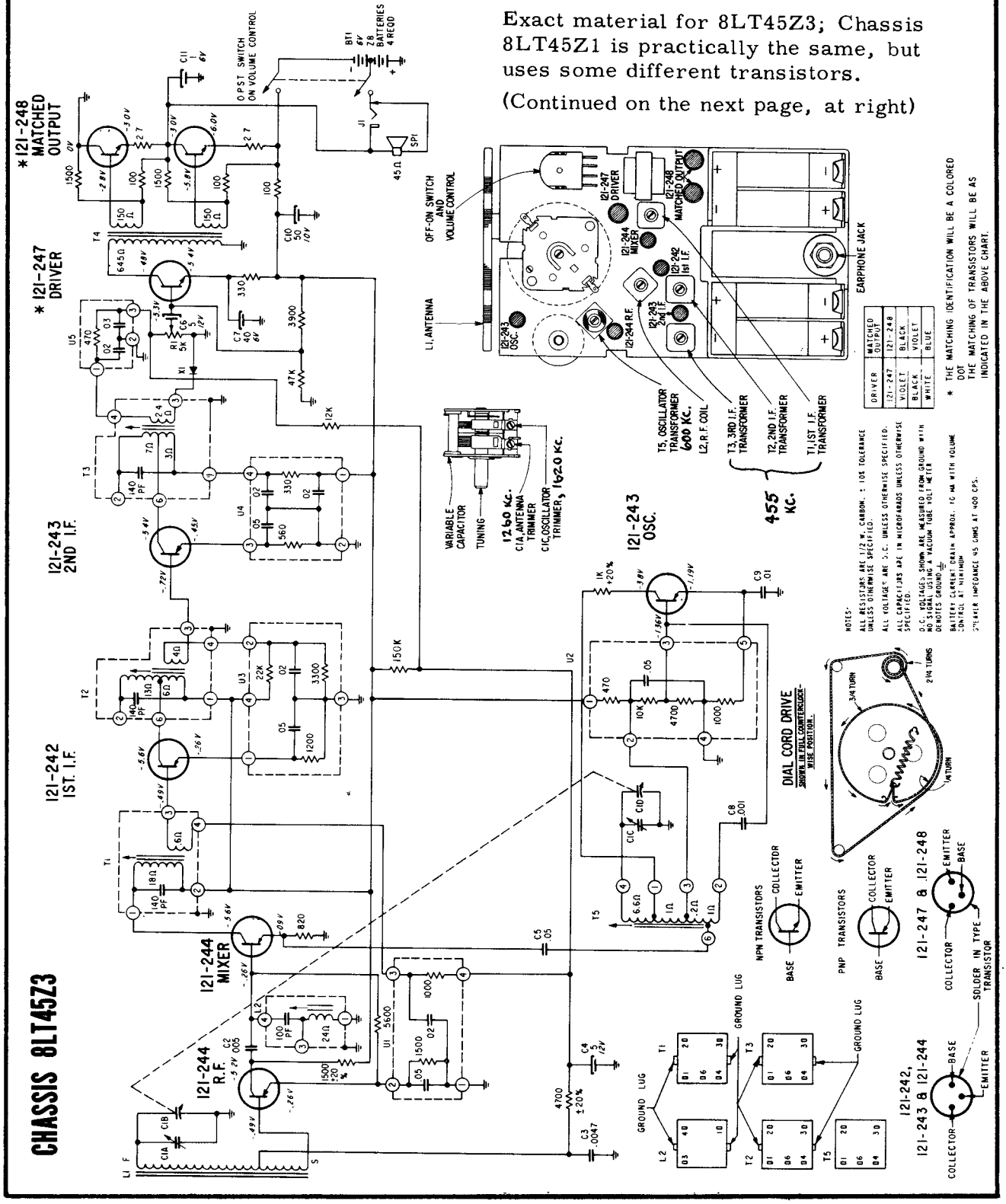

ZENITH RADIO Chassis 8LT45Z1, 8LT45Z3, Model "Royal 500L"

(Continued from preceding page, at left)

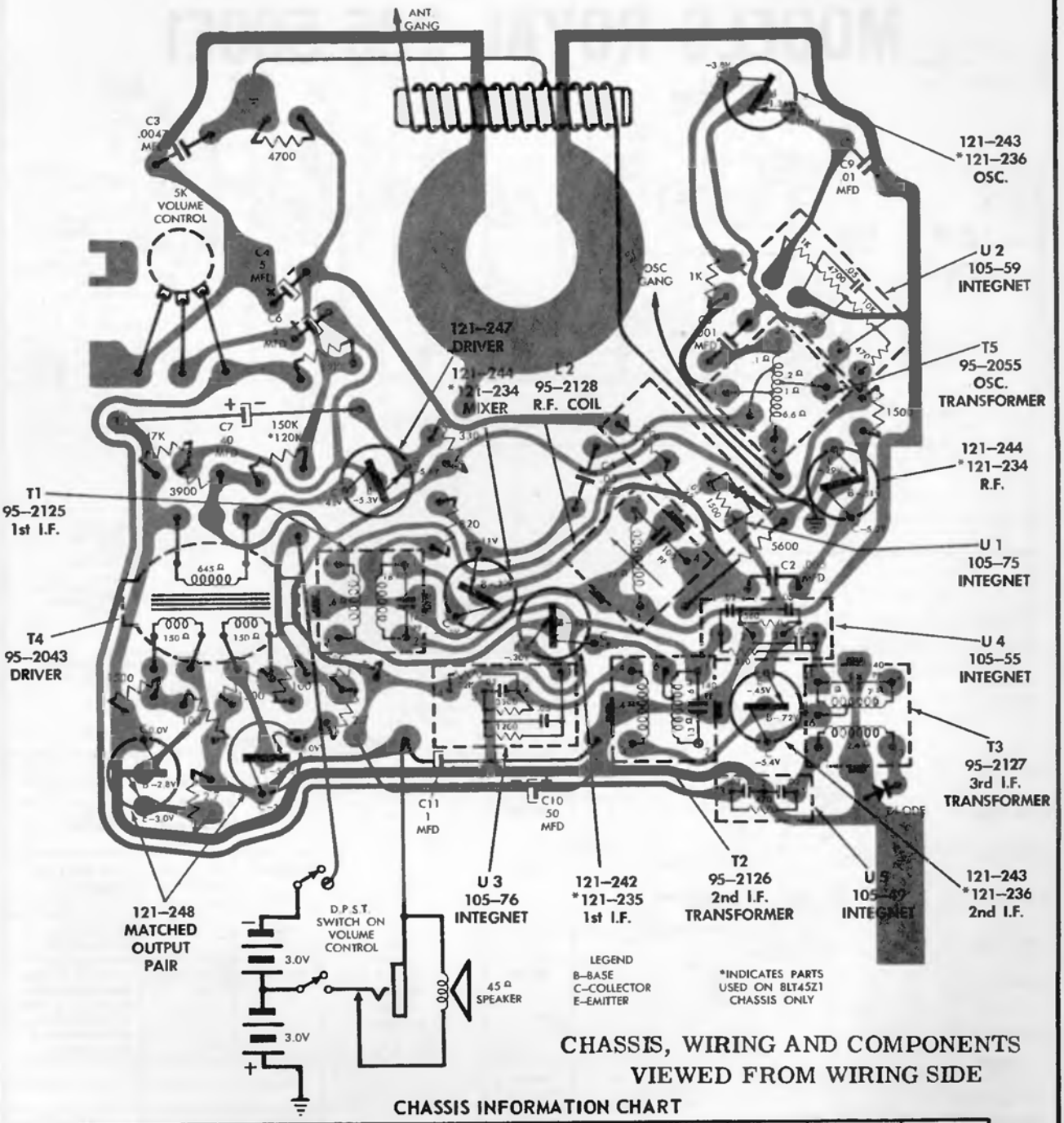

CHASSIS, WIRING AND COMPONENTS VIEWED FROM WIRING SIDE

CHASSIS INFORMATION CHART

Chassis	Part No.	R. F.	Mixer	Osc.	1st I.F.	2nd I.F.	Crystal Diode Detector	Driver	Output	Supplier
8LT45L1	Zenith Type E.I.A.	121-234 PNP GC282	121-234 PNP GC282	121-236 PNP GC284	121-235 PNP GC284	121-236 PNP GC284	103-19 or 103-44	121-247 NPN GC608	121-248 Matched Pair NPN NPN GC609	Texas Instrument
8LT45Z3	Zenith Type E.I.A.	121-244 PNP 2N993	121-244 PNP 2N993	121-243 PNP 2N993	121-242 PNP 2N993	121-243 PNP 2N993	Same as Above	Same as Above	Same as Above	Amperex

ZENITH RADIO CORP. CHASSIS 8KT40Z2

MODELS ROYAL 285-500E1

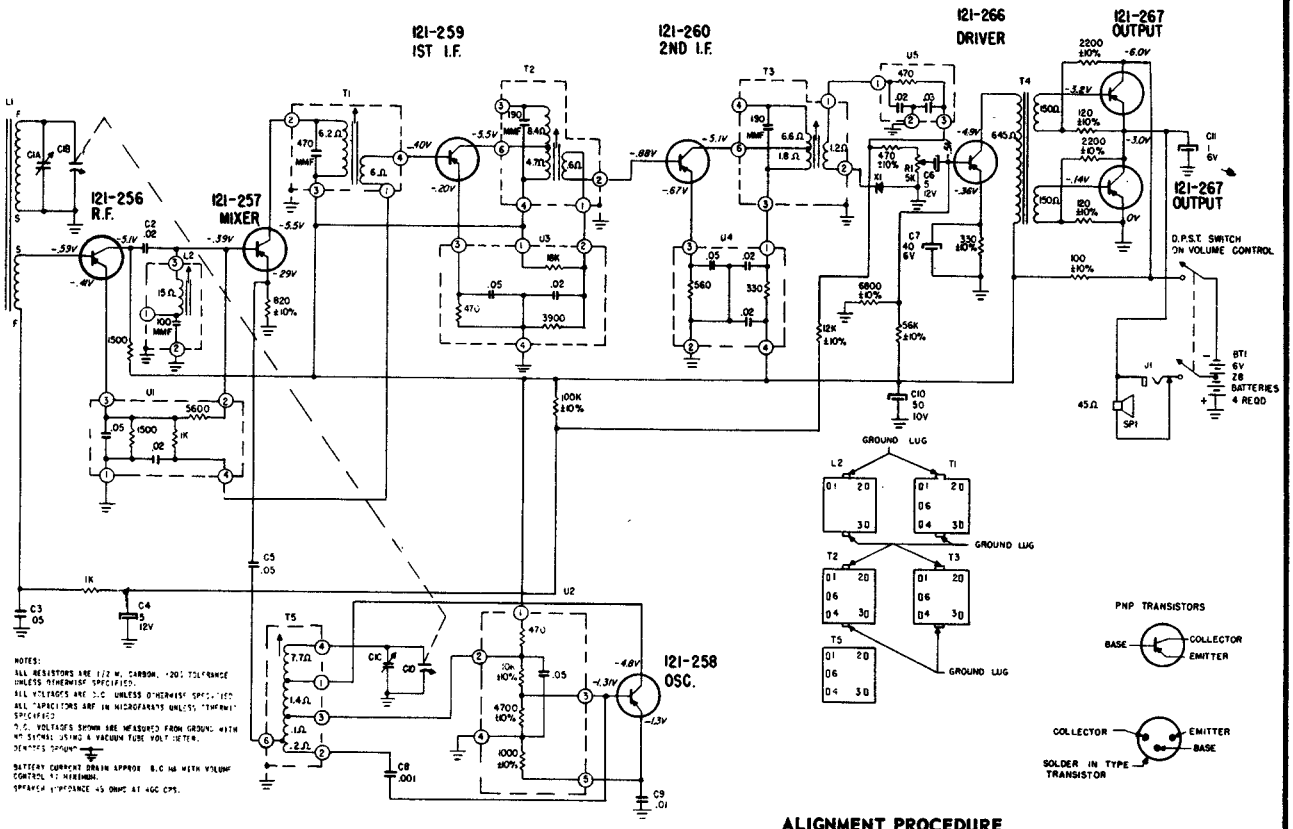

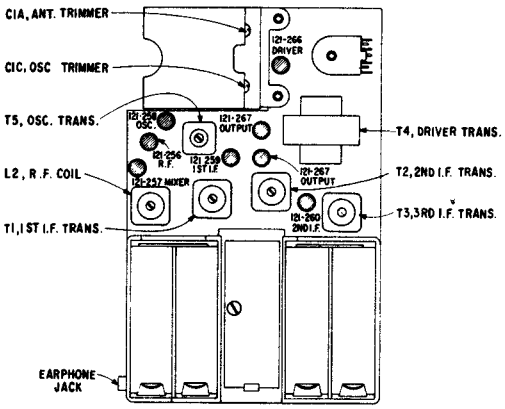

TRANSISTOR & TRIMMER LAYOUT

ALIGNMENT PROCEDURE

Operation	Input Signal Frequency	Connect Inner Conductor From Oscillator To	Set Dial At	Trimmers	Purpose
1	455 KC	ONE TURN LOOSELY COUPLED TO THE ANTENNA	600 KC	Adj. T1, T2 T3 for Maximum output	For I.F. Alignment
2	455 KC		600 KC	Adj. L2 for Minimum output	Tune Trap to IF Frequency
3	1620 KC		Gang Wideopen	C1C	Set Oscillator To Dial Scale
4	600 KC		Near 600	Adjust slug in T5	Adjust T5 for Maximum output while rocking gang. Tune T5 for Maximum output regardless of dial accuracy
5	Repeat Steps 3 & 4		———	———	———
6	1260 KC		1260 KC	C1A	Align Loop Antenna

CHASSIS INFORMATION CHART

Chassis	Part No.	R.F.	Mixer	Osc.	1st I.F.	2nd I.F.	Crystal Diode Detector	Driver	Output-Output	Supplier
8KT40Z2	Zenith Type E.I.A.	121-256 PNP 2N1632	121-257 PNP 2N1526	121-258 PNP 2N1524	121-259 PNP 2N1524	121-260 PNP 2N1524	103-19 or 103-44	121-266 PNP 2N406	121-267 Pair PNP PNP 2N408	R.C.A.

ZENITH Chassis 3L03, Model LPS50

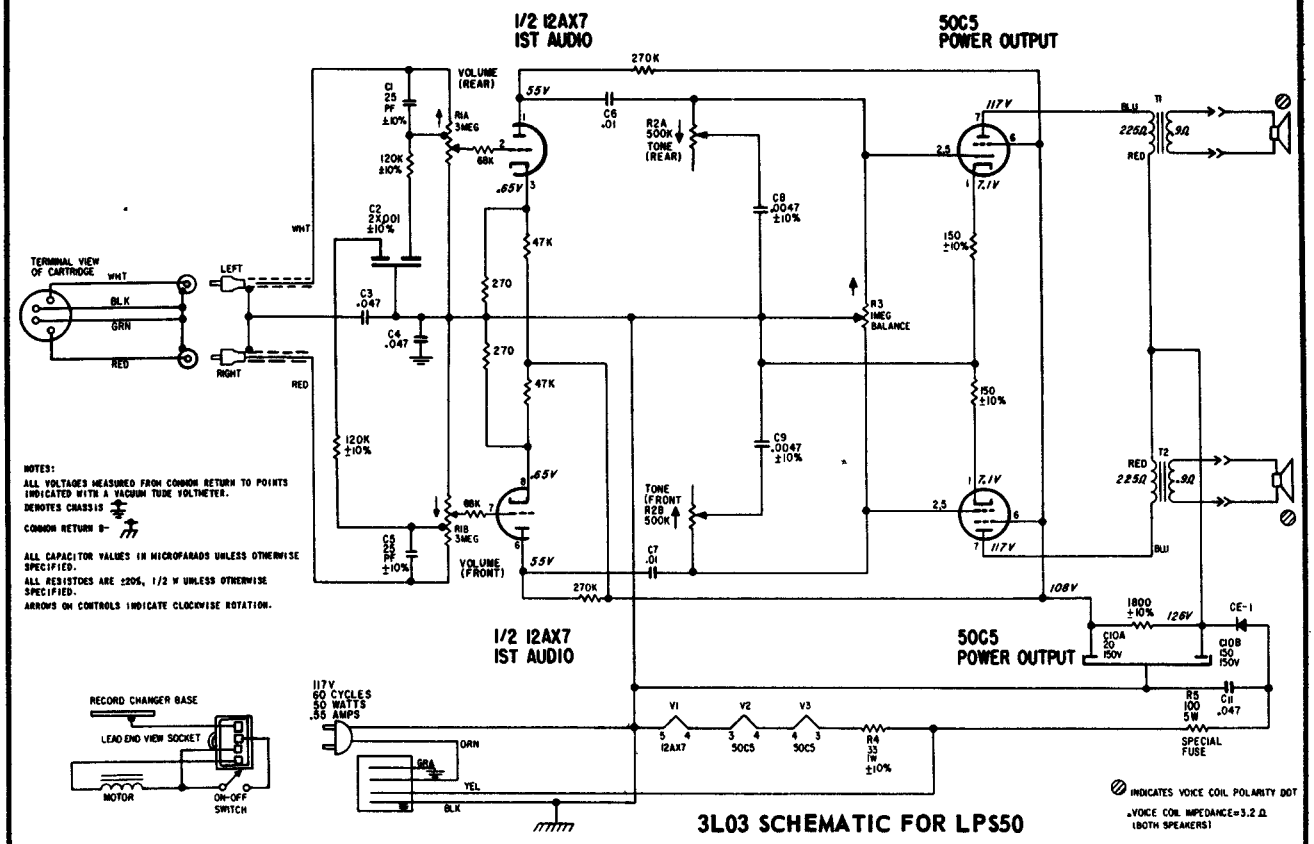

3L03 SCHEMATIC FOR LPS50

ZENITH Chassis 3L05, Model LPS75

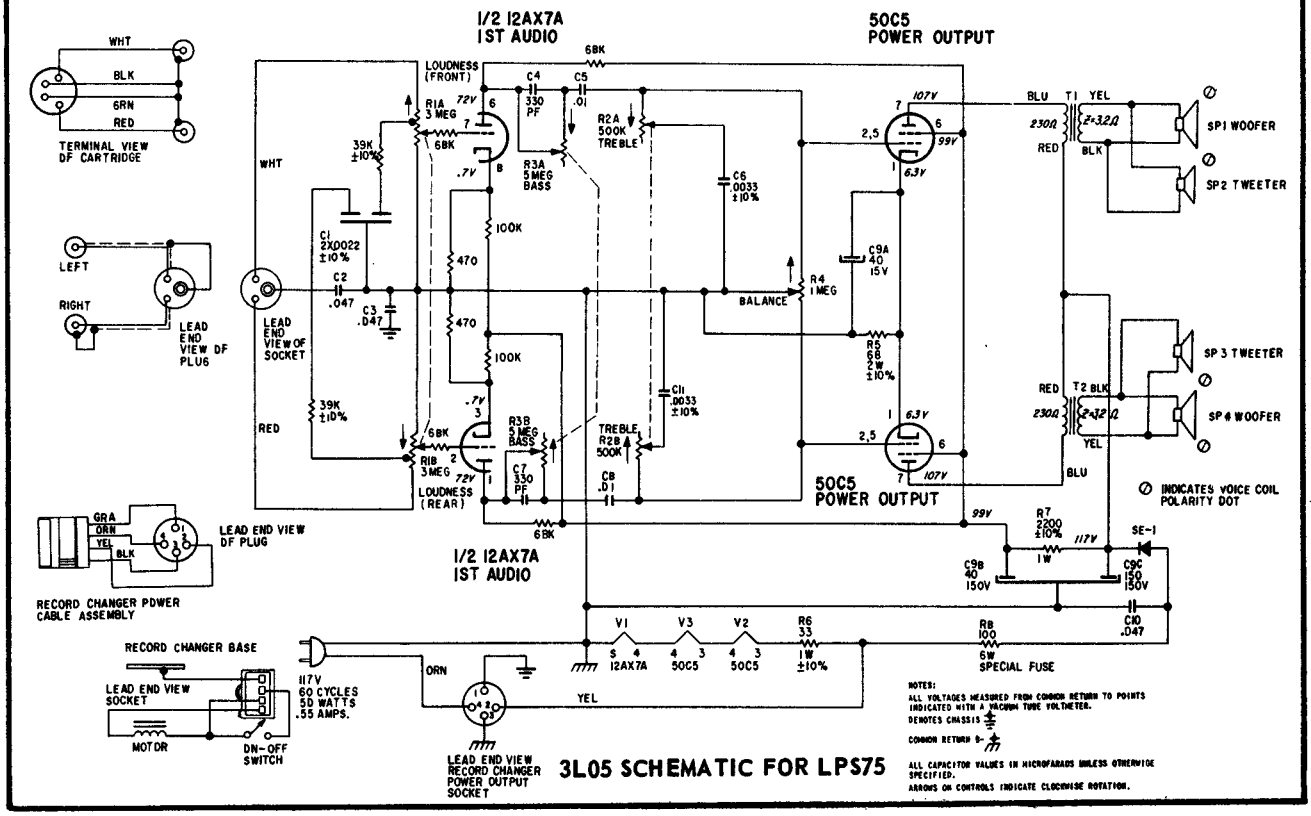

3L05 SCHEMATIC FOR LPS75

ZENITH Chassis 7L01 used in Models ML2420-3, ML2601-3, ML2602-3, and ML2603-3.

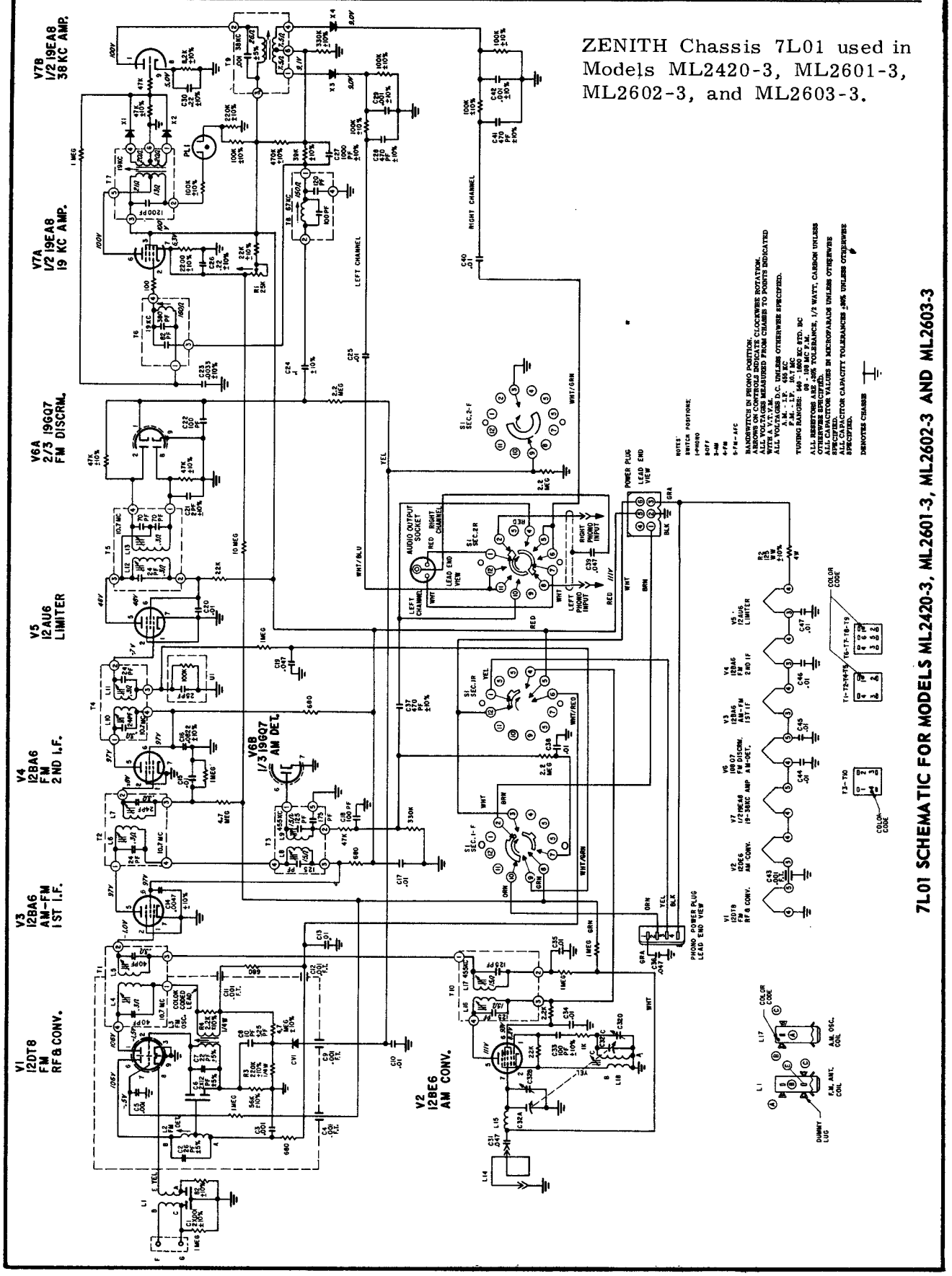

7L01 SCHEMATIC FOR MODELS ML2420-3, ML2601-3, ML2602-3 AND ML2603-3

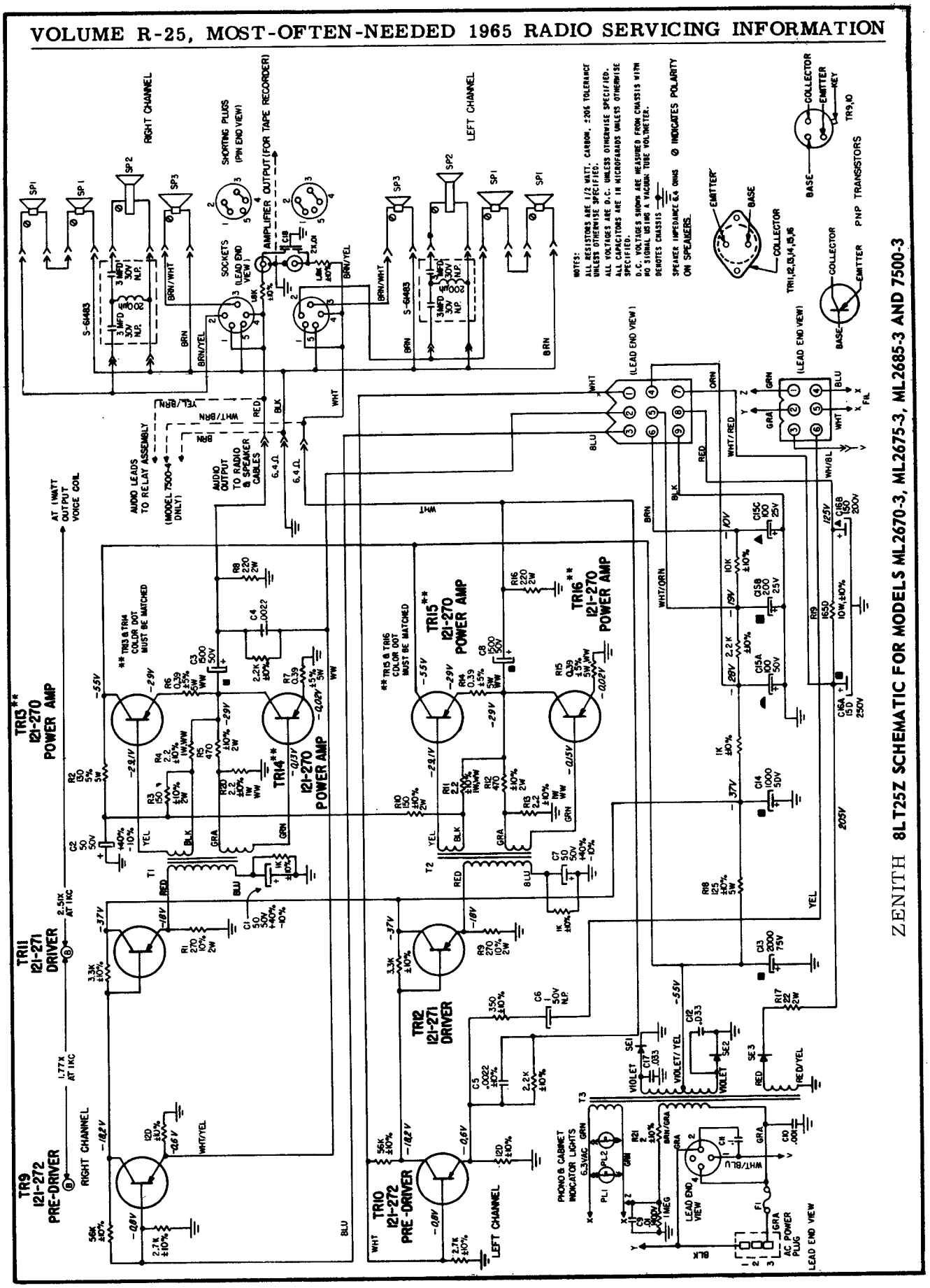
ZENITH 8LT25Z SCHEMATIC FOR MODELS ML2670-3, ML2675-3 AND 7500-3
RIGHT CHANNEL
LEFT CHANNEL
SHORTING PLUGS (PIN END VIEW)
SOCKETS (LEAD END VIEW)
AMPLIFIER OUTPUT (FOR TAPE RECORDER)
AUDIO LEADS TO RELAY ASSEMBLY
(MODEL 7500-4 ONLY)
AUDIO OUTPUT TO RADIO & SPEAKER CABLES
AT 1 WATT OUTPUT VOICE COIL
TR13** 121-270 POWER AMP
TR14** 121-270 POWER AMP
TR15** 121-270 POWER AMP
TR16** 121-270 POWER AMP
TR11 121-271 DRIVER
TR12 121-271 DRIVER
TR9 121-272 PRE-DRIVER
TR10 121-272 PRE-DRIVER
** TR13 & TR14 COLOR DOT MUST BE MATCHED
** TR15 & TR16 COLOR DOT MUST BE MATCHED
PHONO & CABINET INDICATOR LIGHTS 6.3VAC
AC POWER PLUG
LEAD END VIEW
PNP TRANSISTORS
NOTES:
ALL RESISTORS ARE 1/2 WATT, CARBON, ±20% TOLERANCE UNLESS OTHERWISE SPECIFIED.
ALL VOLTAGES ARE D.C. UNLESS OTHERWISE SPECIFIED.
ALL CAPACITORS ARE IN MICROFARADS UNLESS OTHERWISE SPECIFIED.
D.C. VOLTAGES SHOWN ARE MEASURED FROM CHASSIS WITH NO SIGNAL USING A VACUUM TUBE VOLTMETER.
DENOTES CHASSIS
SPEAKER IMPEDANCE 6.4 OHMS
@ INDICATES POLARITY ON SPEAKERS.

ZENITH Chassis 10LT20 used in Models ML2608-3, ML2610-3, ML2636-3, and 7200-3.

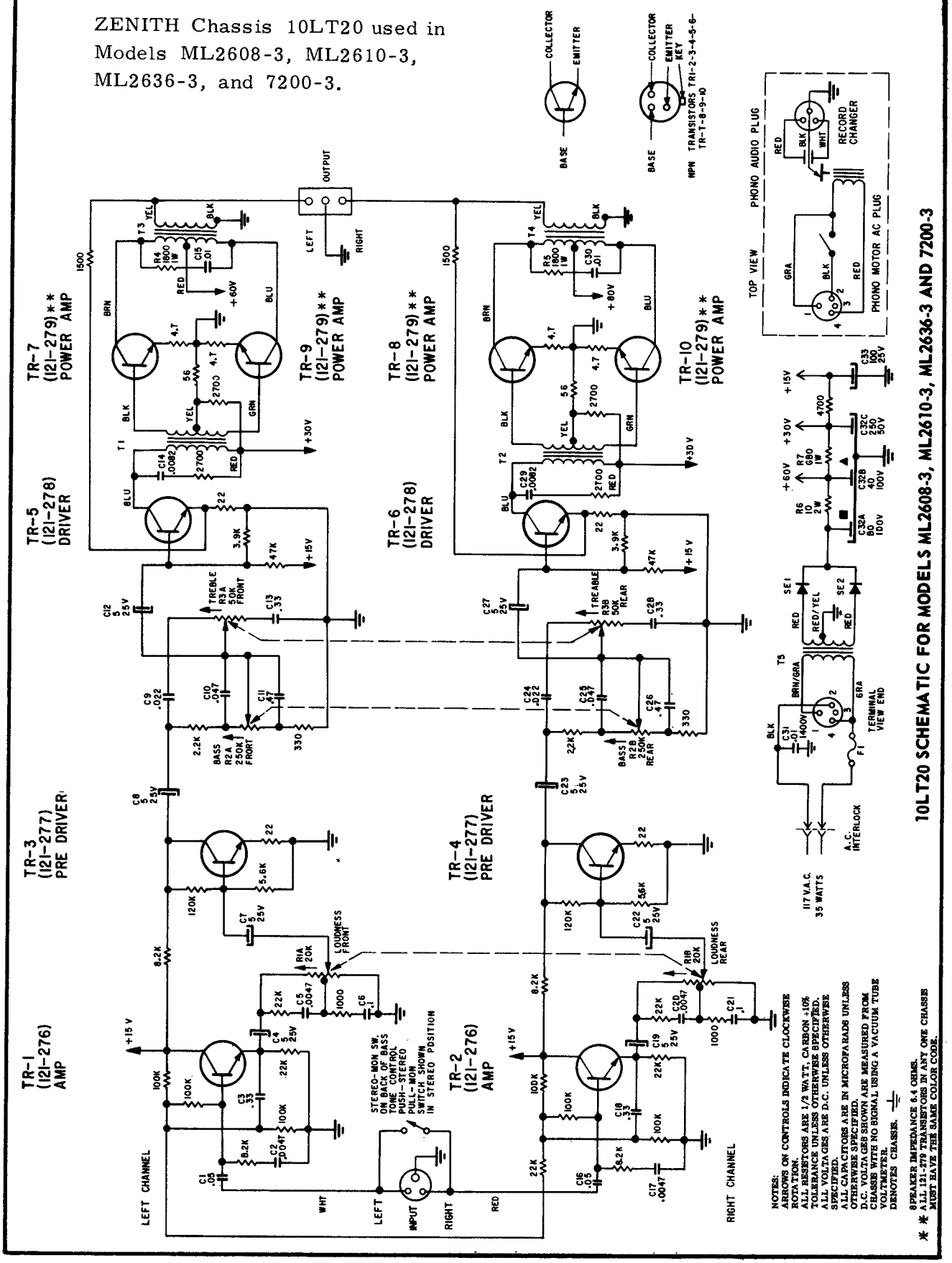

10LT20 SCHEMATIC FOR MODELS ML2608-3, ML2610-3, ML2636-3 AND 7200-3

ZENITH Chassis 10L23
(Continued on next page)

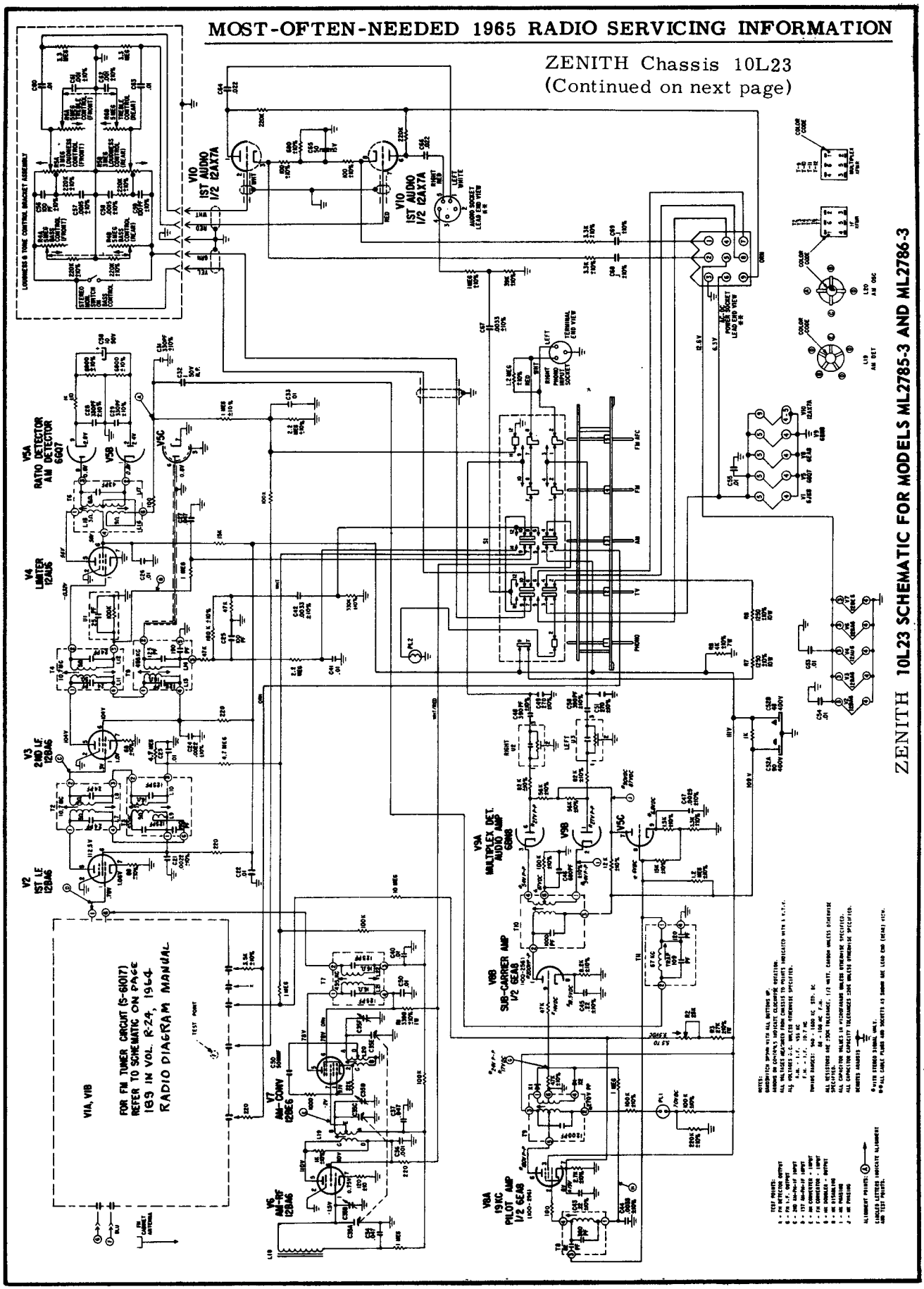

ZENITH Chassis 10L23, Models ML2785-3 and ML2786-3, Continued

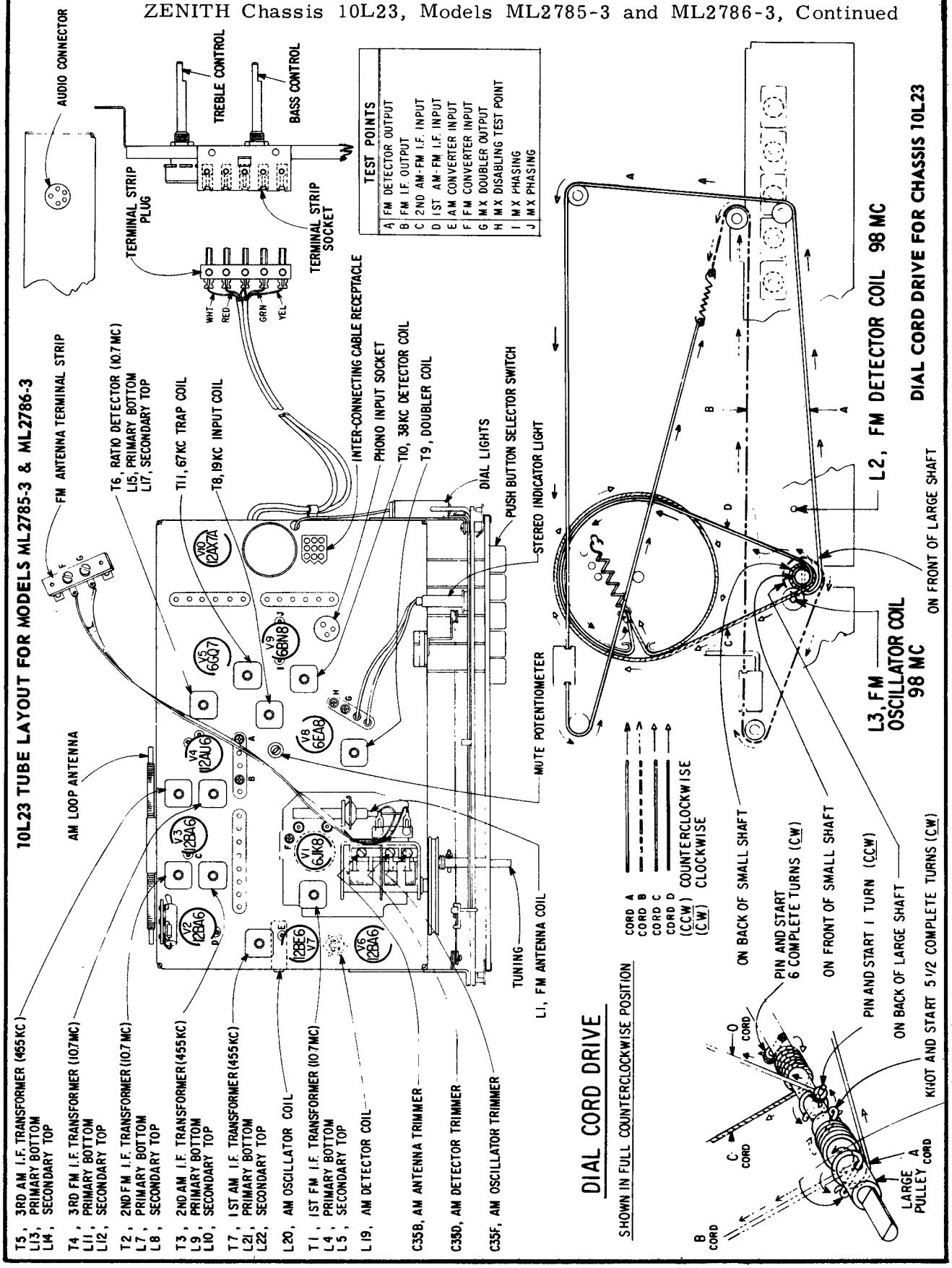

INDEX to R-25, MOST-OFTEN-NEEDED 1965 RADIO SERVICING INFORMATION

INDEX to R-25, MOST-OFTEN-NEEDED 1965 RADIO SERVICING INFORMATION