Most-Often-Needed

1964

Volume R-24

RADIO DIAGRAMS

and Servicing Information

Compiled by

M. N. BEITMAN

SUPREME PUBLICATIONS

Supreme Publications for Faster Radio-Television Repairs

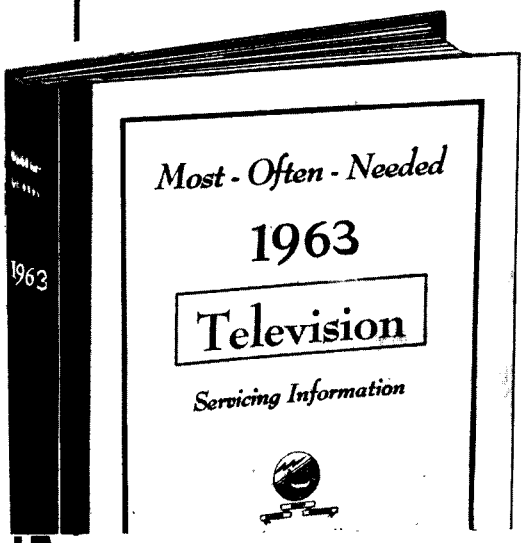

COVERS ALL POPULAR SETS

Here is your service data for faster, easier TV repairs. Lowest priced. Best by comparison. *Supreme* **TV** manuals have all needed service material on every popular TV set. Helpful, practical, factory-prepared data that will really make TV servicing easy for you. Benefit and save with these amazing values in service manuals. Only $3 per large volume. Used by 184,000 wise servicemen for faster repairs. Join them; begin to make TV repairs easily.

The repair of any TV set is simple with **Supreme Television** service manuals. Every set is covered in a practical manner to simplify trouble-shooting and repair. With this help find toughest faults in a jiffy. Most $3 TV volumes cover a whole year.

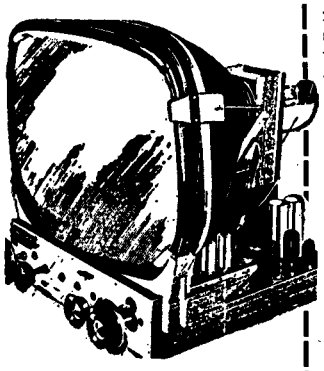

RADIO Manuals

Your best source for all needed RADIO diagrams and service data. Covers everything from most recent 1963 radios to pre-war old-timers; home radios, stereo, combinations, transistor portables, FM. Every manual has large schematics, all needed alignment facts, printed boards, voltages, trimmers, dial stringing, and hints. Volumes are big, 8½x11 inches, about 190 pages. See coupon at right for list of SUPREME popular radio service manuals ▶

NO-RISK ORDER COUPON

TELEVISION SERVICE MANUALS

Supreme TV manuals are best for faster, easier TV repairs. Lowest priced. Factory data on practically all sets. Complete circuits, all needed alignment facts, wiring board views, waveforms, voltages, production changes, and double-page schematics. Only $3 per large annual manual. Check volumes wanted.

- ☐ *New* 1963 Television Servicing Manual, only $3.
- ☐ Additional 1962 TV, $3. ☐ Early 1962 TV, $3.
- ☐ 1961 TV Manual, $3. ☐ 1960 TV Manual, $3.
- ☐ Additional 1959 TV, $3. ☐ Early 1969 TV, $3.
- ☐ 1958 TV Manual, $3. ☐ Additional 1957 TV, $3.
- ☐ Early 1957 Television, $3. ☐ 1956 TV Manual, $3.
- ☐ Additional 1955 TV, $3. ☐ Early 1955 TV, $3.
- ☐ 1954 TV, $3. ☐ 1953 TV, $3. ☐ 1952 TV, $3.
- ☐ 1951 TV, $3. ☐ Master Index to all Manuals, 25¢

RADIO DIAGRAM MANUALS

Here are low-priced radio manuals that simplify repairing. Cover everything from most recent 1963 radios to pre-war old-timers; home radios, stereo, combinations, transistor portables, FM, and auto sets. Large schematics, all needed alignment facts, printed boards, voltages, dial stringing, hints. Volumes are big, 8½ x 11", about 190 pages, each.

$2.50

☐ 1963, ☐ 1962, ☐ 1961, ☐ 1960, ☐ 1959, ☐ 1958, ☐ 1957, ☐ 1956, ☐ 1955, ☐ 1954, ☐ 1953, ☐ 1952, ☐ 1951, ☐ 1950, ☐ 1949, ☐ 1948, ☐ 1947, ☐ 1946, ☐ 1942, ☐ 1941, ☐ 1940, ☐ 1926-38, EACH, $2.50

SUPREME PUBLICATIONS

1760 Balsam Road, Highland Park, ILL.

Rush today **TV** and **Radio** manuals checked in no-risk order form of this ad. Send postpaid; I am enclosing full price. You guarantee my complete satisfaction or my money back.

Name: _____

Address: _____

City: _____ State: _____

ADMIRAL

MODEL Y4659 - Y4677
CHASSIS 4S3A

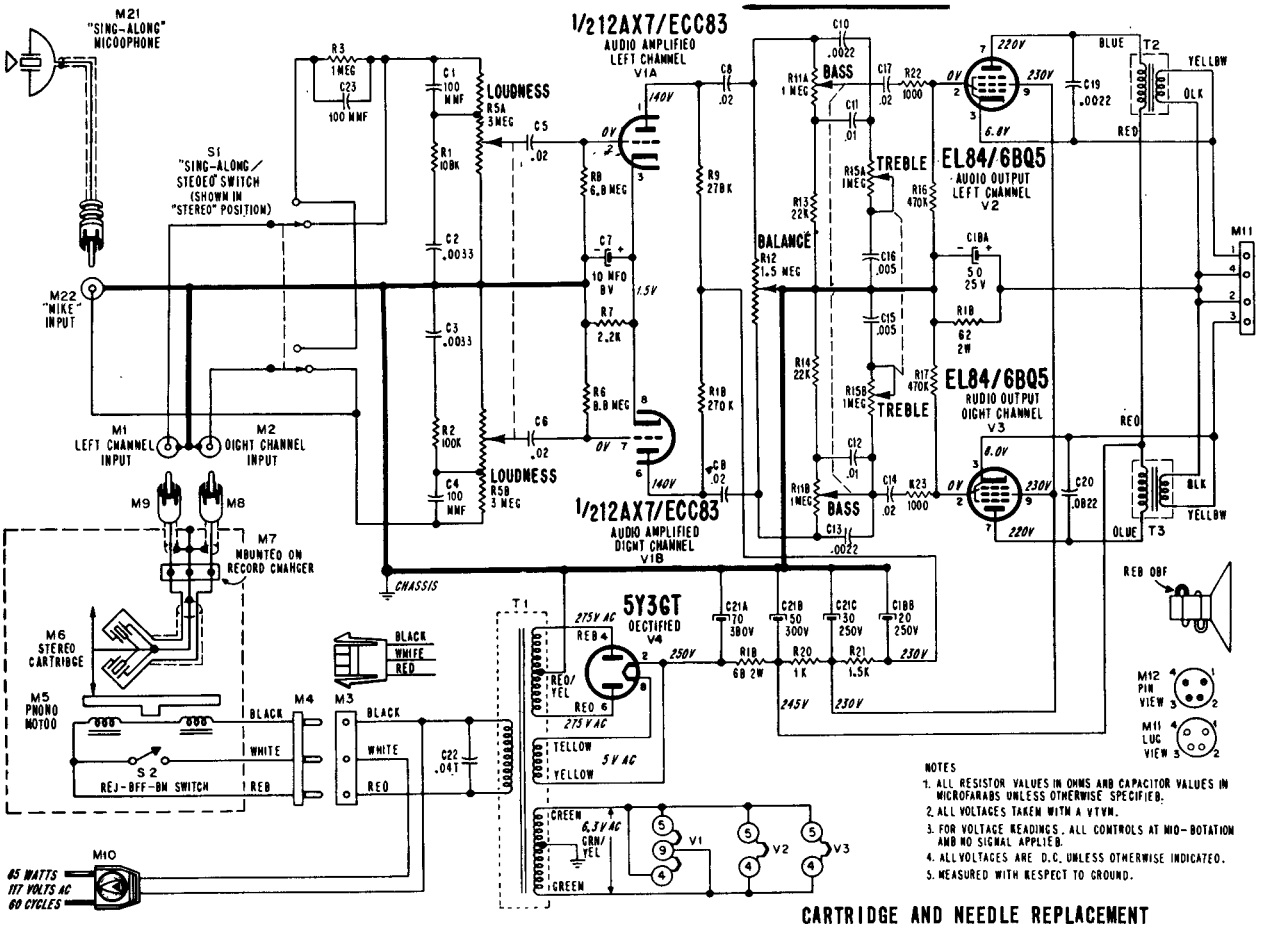

NOTES
1. ALL RESISTOR VALUES IN OHMS AND CAPACITOR VALUES IN MICROFARADS UNLESS OTHERWISE SPECIFIED.
2. ALL VOLTAGES TAKEN WITH A VTVM.
3. FOR VOLTAGE READINGS, ALL CONTROLS AT MID-ROTATION AND NO SIGNAL APPLIED.
4. ALL VOLTAGES ARE D.C. UNLESS OTHERWISE INDICATED.
5. MEASURED WITH RESPECT TO GROUND.

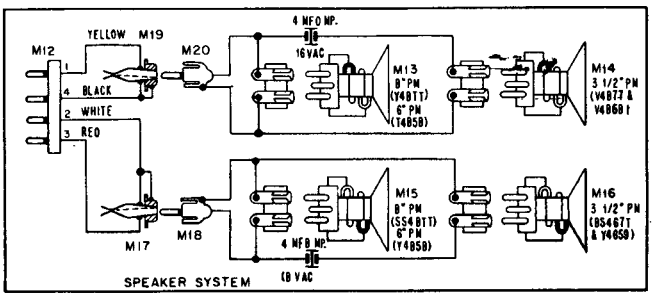

CHASSIS REMOVAL

Disconnect the line cord. Remove four screws holding chassis grille in place. Pull all control knobs off. Remove the nuts under the knobs of the treble and loudness controls while supporting the chassis. Chassis may now be lowered and pulled out for easy servicing.

IMPORTANT: For regular phonograph operation when "sing along" microphone is not being used, unplug microphone from socket and move switch back to "Stereo" position. If microphone is not disconnected with switch in "Stereo" position, the two sound channels will become out of balance, affecting satisfactory sound reproduction. Connect microphone only when using "sing along" operation.

CARTRIDGE AND NEEDLE REPLACEMENT

Turn needle selector handle so that desired number (78 or LPS) faces up; corresponding needle will point down. With thumbnail, pull flange at rear of worn needle straight away from cartridge. Line up parallel flanges of new needle with opening in cartridge case and press in place with fingertip.

ADMIRAL

CHASSIS 1F1B
MODEL Y4918

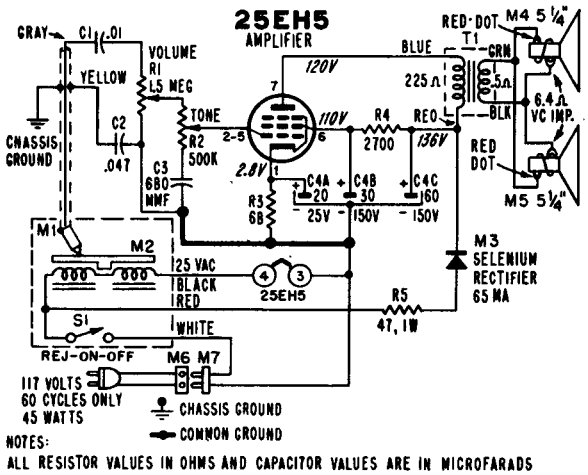

NOTES:
ALL RESISTOR VALUES IN OHMS AND CAPACITOR VALUES ARE IN MICROFARADS UNLESS OTHERWISE SHOWN. ALL VOLTAGES TAKEN WITH VACUUM TUBE VOLTMETER.

ADMIRAL

CHASSIS: 4X3, 4X3A
MODELS: Y3303, Y3308, Y3309, Y3337, Y3443

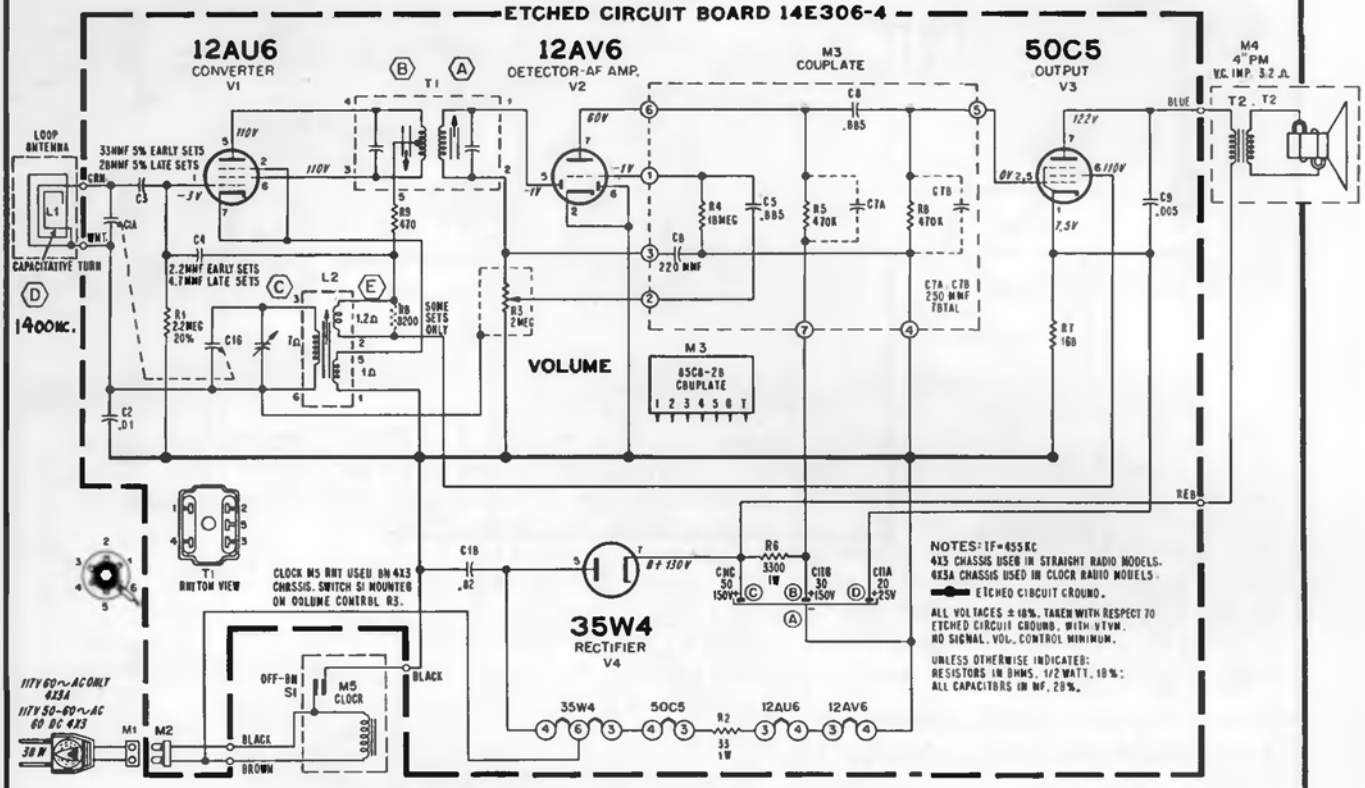

CHASSIS REMOVAL

1. Pull knob off and remove screw under tuning knob.
2. Carefully pry up top of cabinet at back with finger tips, enough to allow removal of cabinet back.
3. Remove screw holding volume control to cabinet front.
4. Remove plastic support from back of chassis and slip chassis assembly out.

WARNING! DO NOT CONNECT AN EARTH GROUND WIRE TO THIS RECEIVER.

The chassis of this receiver is connected directly to one side of the power line. To prevent damage to test equipment or to etched wiring, do not place chassis directly on a metal bench or other metal object.

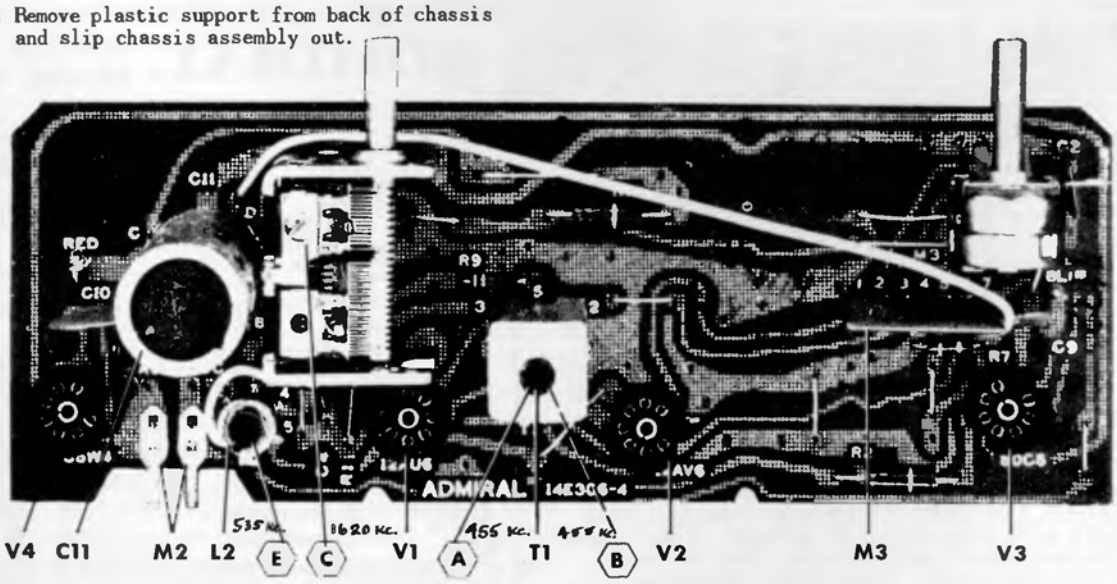

TOP VIEW OF CHASSIS (4X3) SHOWING COMPONENTS AND ALIGNMENT POINTS

ADMIRAL

Chassis 5D6A, 5D6B, 5D6C,

Models Y3321, Y3323, Y3346, Y3353, Y3354, Y3359, Y3363, Y3364, Y3368, Y3376, Y3377, Y3379, Y3381, Y3383.

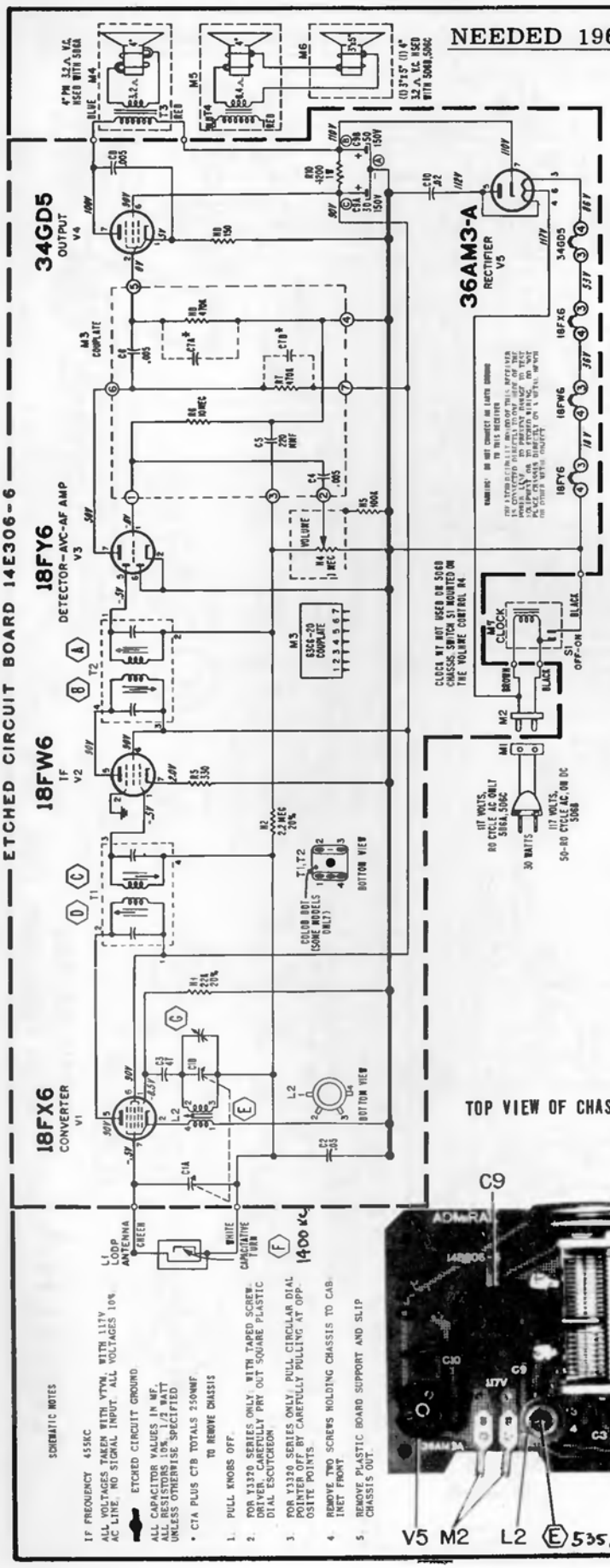

DIAL STRINGING DIAGRAM - 5D6B CHASSIS

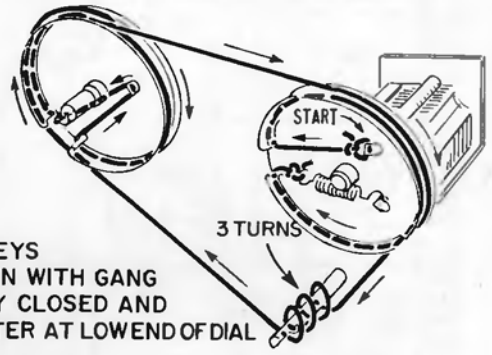

PULLEYS SHOWN WITH GANG FULLY CLOSED AND POINTER AT LOWEND OF DIAL

DIAL STRINGING DIAGRAM - 5D6C CHASSIS

PULLEY SHOWN WITH TUNING CAPACITOR FULLY CLOSED AND POINTER AT LOW END OF DIAL.

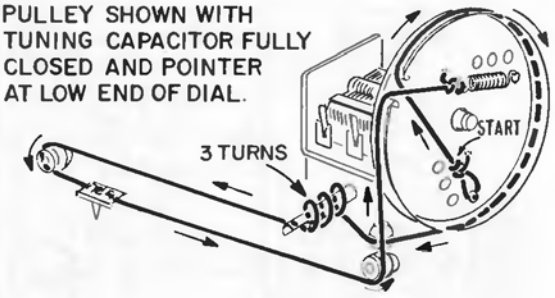

TOP VIEW OF CHASSIS (5D6B) SHOWING COMPONENTS AND ALIGNMENT POINTS

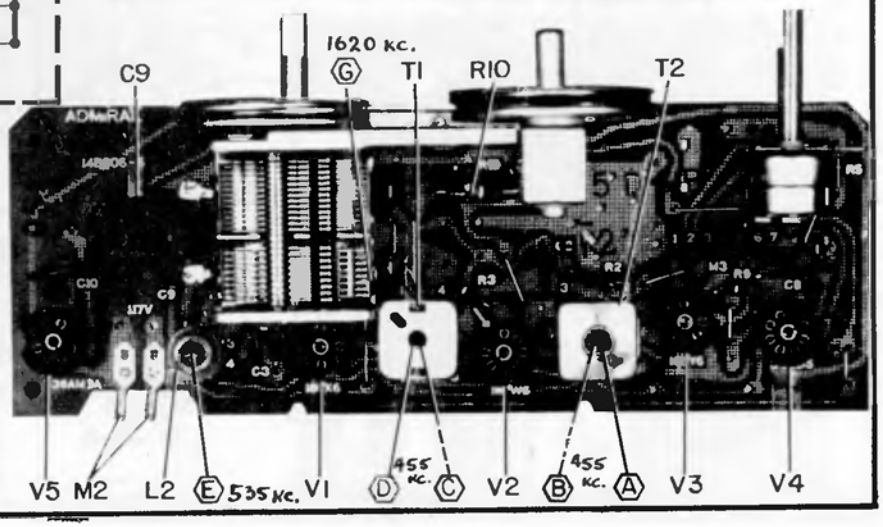

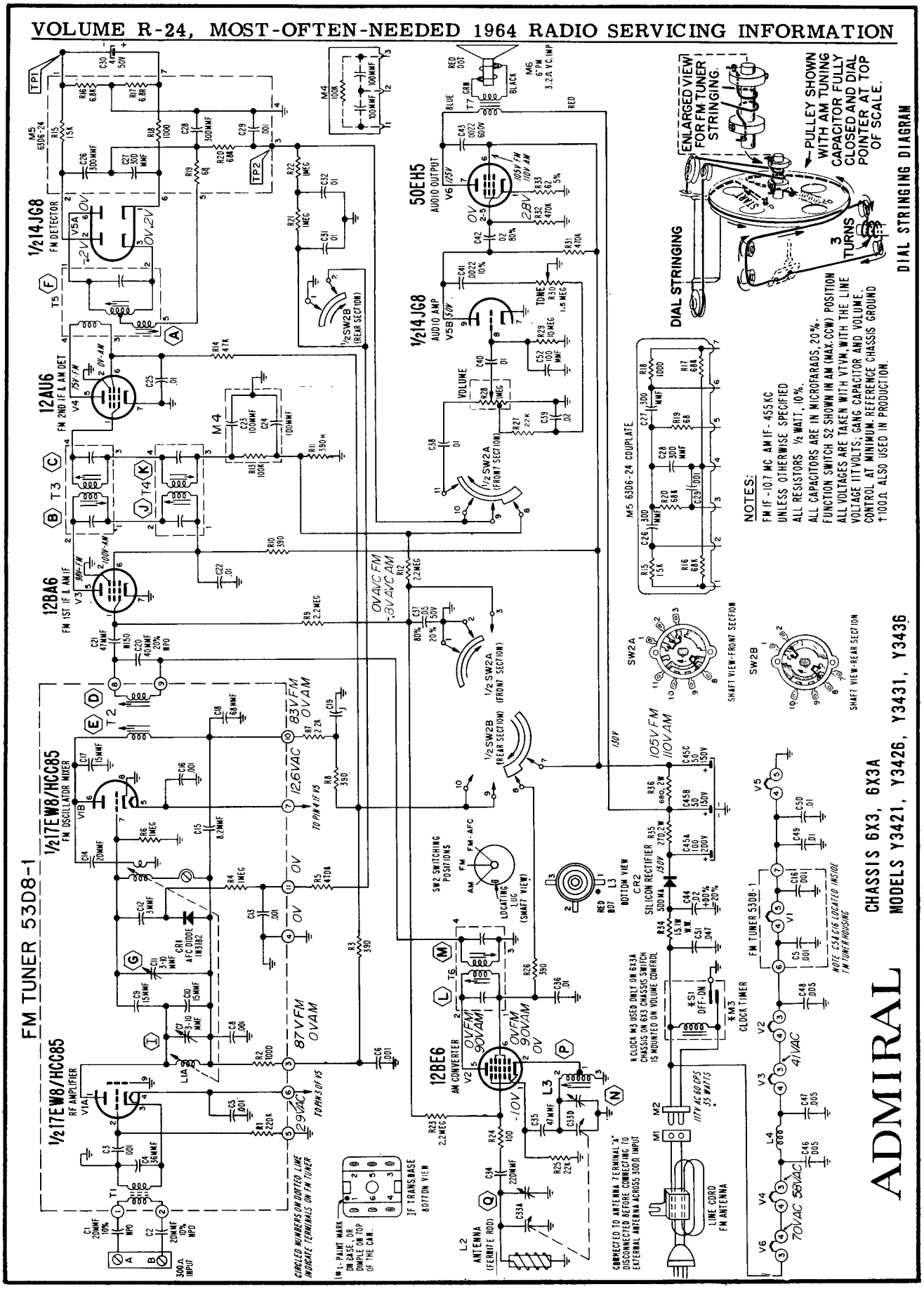
FM TUNER 53D8-1
1/2 17EW8/HCC85 RF AMPLIFIER
1/2 17EW8/HCC85 FM OSCILLATOR MIXER
12BA6 FM 1ST IF & AM IF
12AU6 FM 2ND IF & AM DET
1/2 14JG8 FM DETECTOR
1/2 14JG8 AUDIO AMP
50EH5 AUDIO OUTPUT
12BE6 AM CONVERTER
ANTENNA (FERRITE ROD)
LINE CORD FM ANTENNA
CLOCK TIMER
SILICON RECTIFIER
SW2 SWITCHING POSITIONS
IF TRANSBASE BOTTOM VIEW
CIRCLED NUMBERS ON DOTTED LINE INDICATE TERMINALS ON FM TUNER
CONNECTED TO ANTENNA TERMINAL "A" DISCONNECTED BEFORE CONNECTING TO EXTERNAL ANTENNA ACROSS 300Ω INPUT
DIAL STRINGING
ENLARGED VIEW FOR FM TUNER STRINGING.
PULLEY SHOWN WITH AM TUNING CAPACITOR FULLY CLOSED AND DIAL POINTER AT TOP OF SCALE.
3 TURNS
DIAL STRINGING DIAGRAM
NOTES:
FM IF-10.7 MC AM IF-455 KC
UNLESS OTHERWISE SPECIFIED
ALL RESISTORS ½ WATT, 10%.
ALL CAPACITORS ARE IN MICROFARADS, 20%.
FUNCTION SWITCH S2 SHOWN IN AM (MAX. CCW) POSITION
ALL VOLTAGES ARE TAKEN WITH VTVM, WITH THE LINE VOLTAGE 117 VOLTS; GANG CAPACITOR AND VOLUME CONTROL AT MINIMUM. REFERENCE CHASSIS GROUND
†100Ω ALSO USED IN PRODUCTION.
ADMIRAL
CHASSIS 6X3, 6X3A
MODELS Y3421, Y3426, Y3431, Y3436

ADMIRAL Chassis 7L2, Model Y2347

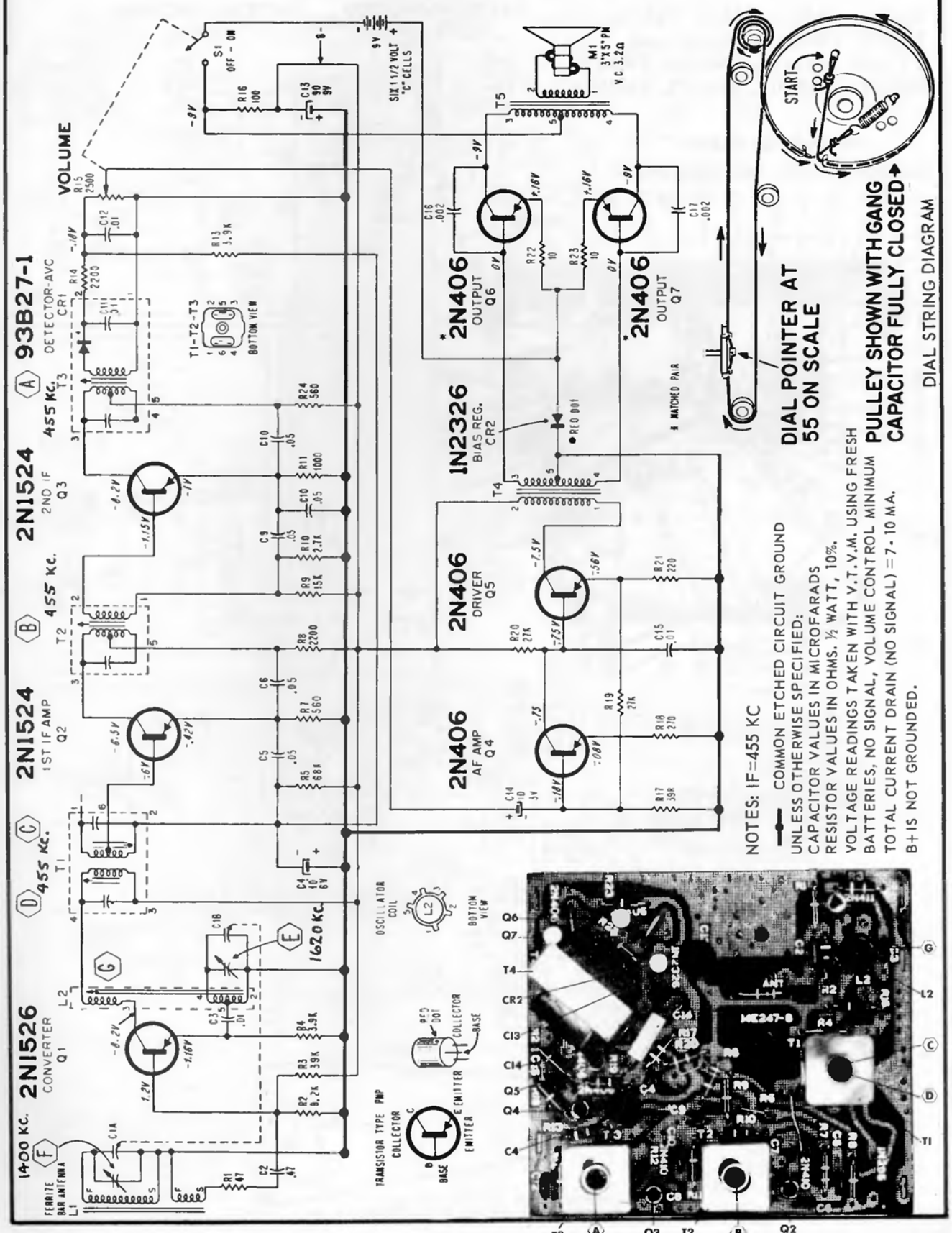

ADMIRAL Chassis 9P1 and similar Chassis 8P1, list of models below, continued

Models Y4851, Y4852, Y4871, Y4872, Y4885, Y4941A, and TV sets SM3811, SM3812, SM3815, SM3831, SR3501, SR3502, SM3503.

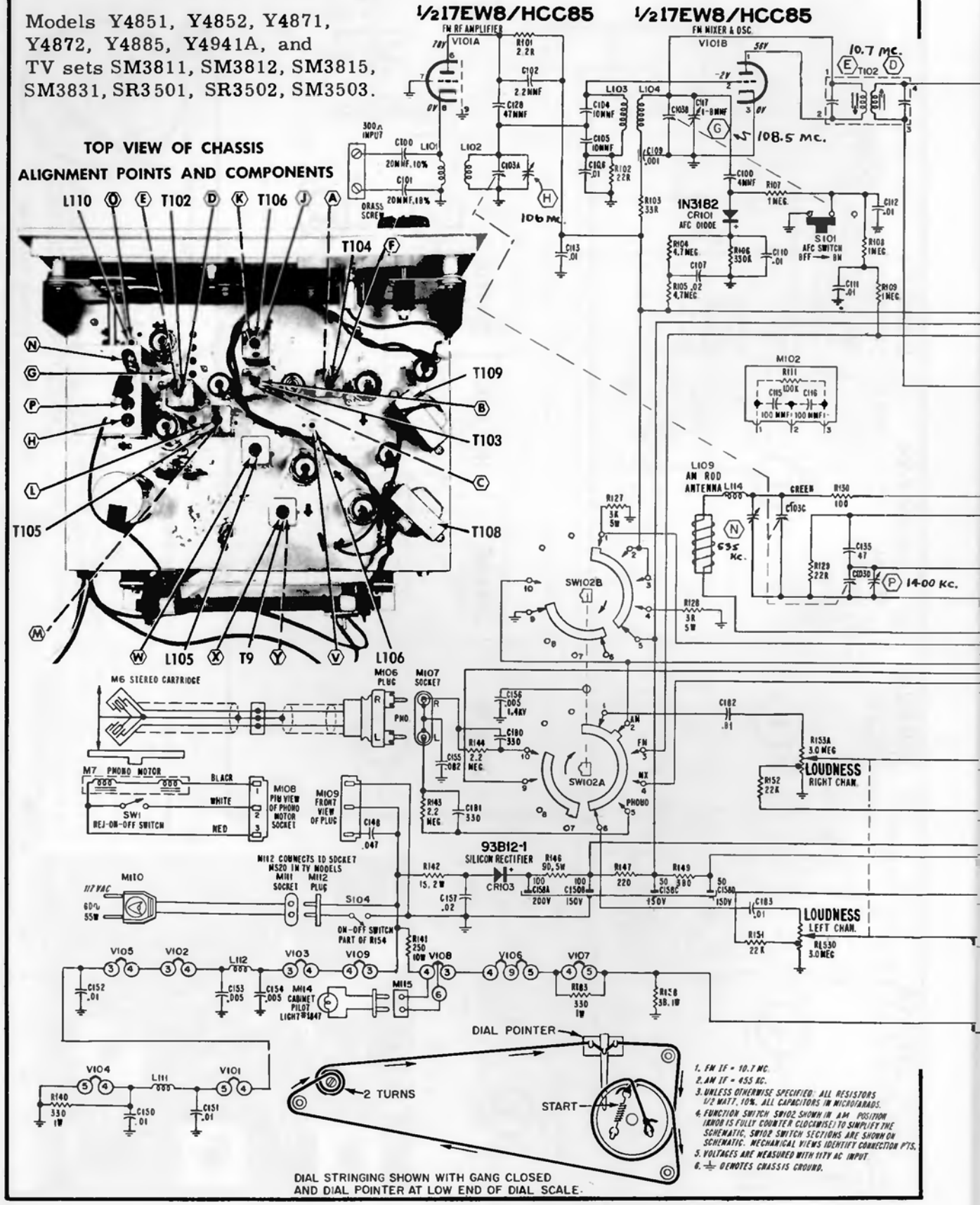

ADMIRAL Chassis 9P1 (and 8P1) used in models listed on preceding page

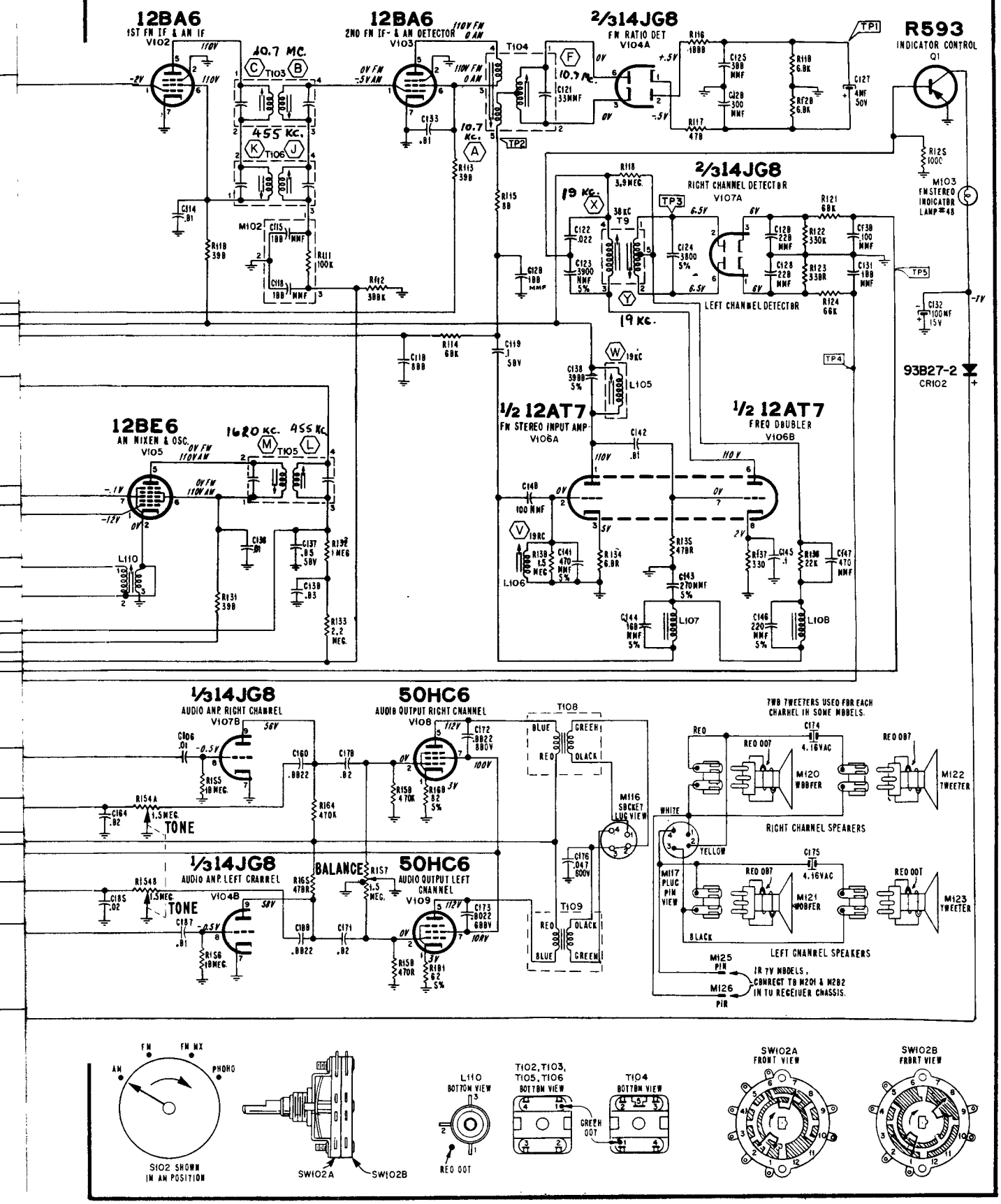

ADMIRAL

CHASSIS: 8G2
MODEL: Y2351

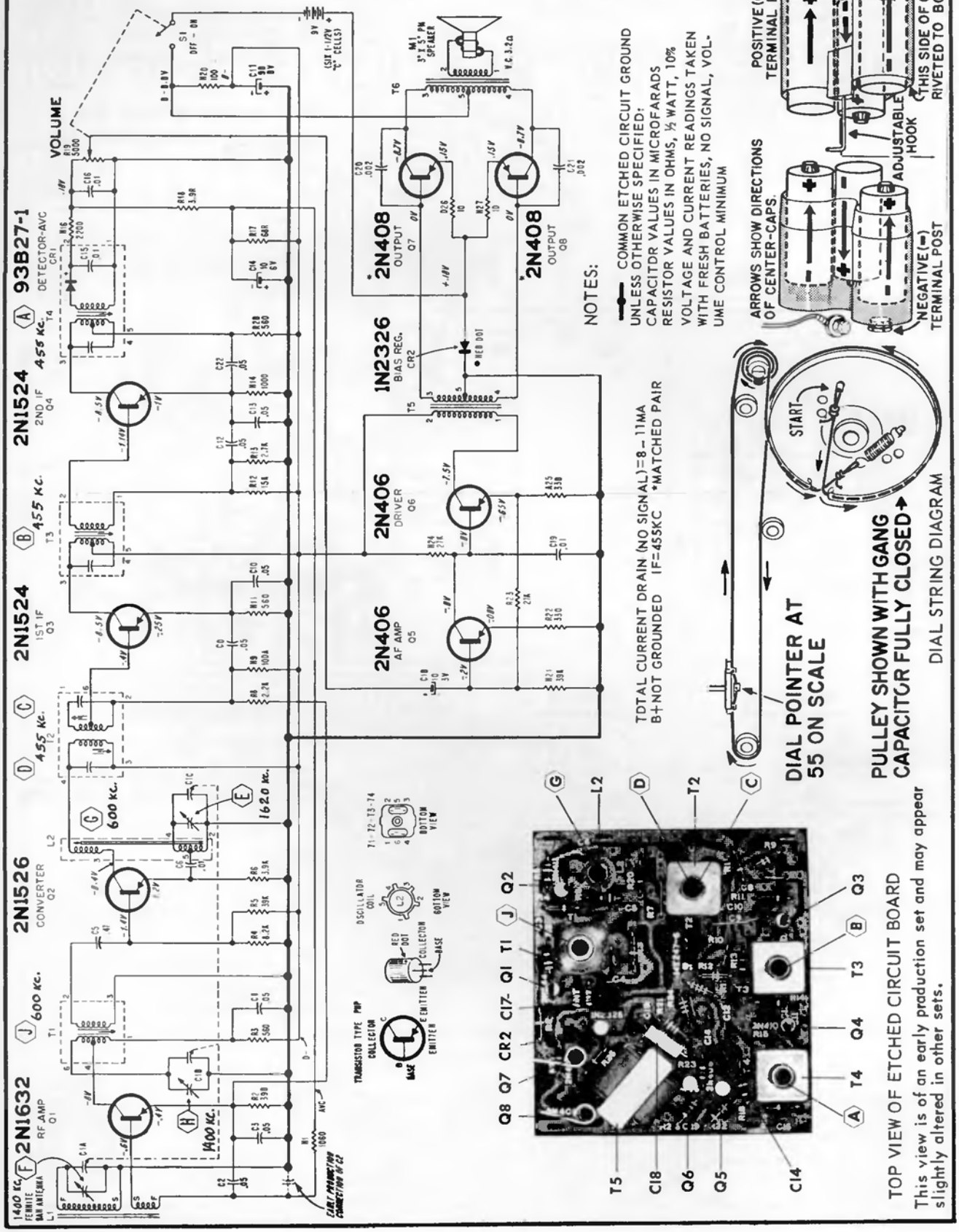

Arvin

Models 53R05, 53R07, Code 1.74401, Models 53R17, 53R19, Code 1.75401, Models 53R27, 53R28, Code 1.76001, and electrically similar Models 13R35, 13R37, Code 1.74501, which use dual speakers and are less clock.

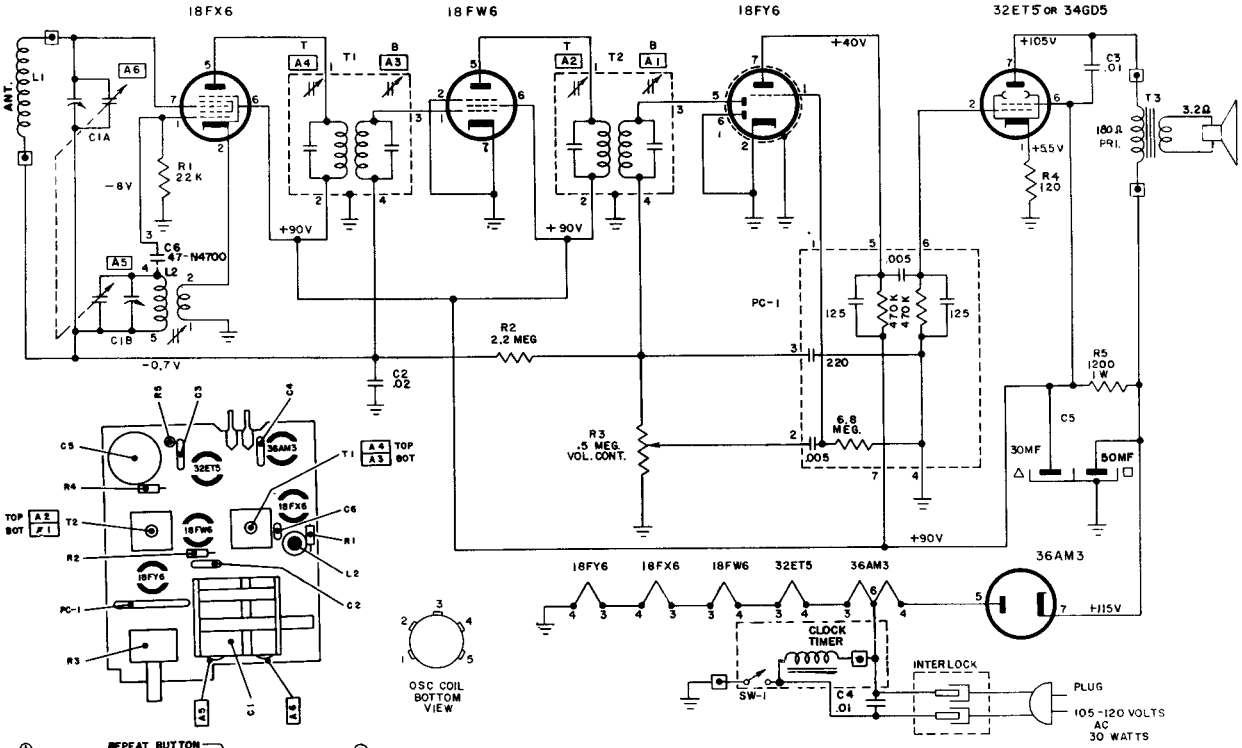

ON-OFF-AUTO SWITCH

The small knob (2) below clock face operates a three position switch. When the knob is turned to the center position the radio will be turned off. With this knob in the left position, the radio receiver is turned on. After allowing about 30 seconds for "warm-up", the radio receiver will be in operation if the TUNING (3) and the VOLUME (4) CONTROLS have been properly adjusted. When this (2) knob is turned to the right position, the radio will be turned on automatically when the hands of the clock indicate the time for which the AUTO POINTER is set.

⏚ = B-

▣ = EXTERNAL CONNECTIONS TO PRINTED BOARD.

VOLTAGES MEASURED WITH A V.T.V.M.

RESISTANCE VALUES ARE IN OHMS K=1,000, MEG=1,000,000.

CAPACITANCE VALUES LESS THAN (1) ARE IN MICROFARADS (μf), AND VALUES OF (1) OR GREATER ARE IN MICROMICROFARADS (μμf), UNLESS OTHERWISE INDICATED.

ALIGNMENT PROCEDURE

PRELIMINARY:

Output meter connection ..... Across speaker voice coil
Output meter reading to indicate 500 milliwatts (standard output) ..... 1.0 volts
Connection of generator ground lead ..... Floating ground
Generator modulation ..... 30% 400 cycles

Position of Variable	Frequency of Generator	Dummy Antenna	Generator Output Connection	Trimmers Adjusted in Order Shown for Maximum Output	Function of Trimmer
Open	455 Kc	.05 μ fd	Pin 7 18FX6	A1, A2, A3, A4	I.F.
Open	1670 Kc		* Test Loop	A5	Oscillator
1400	1400 Kc		* Test Loop	A6	Antenna
1000	1000 Kc		* Test Loop	Fan C1A Plates	
600	600 Kc		* Test Loop	Fan C1A Plates	

* Standard Hazeltine Test Loop Model 1150 or 3 turns of wire about 6" in diameter placed about one foot from the set loop.

The alignment procedure should be repeated in the original order for greatest accuracy. Always keep the output from the signal generator at its lowest possible value to make the AVC action of the receiver ineffective.

Arvin Model 63R58 Code 1. 75101

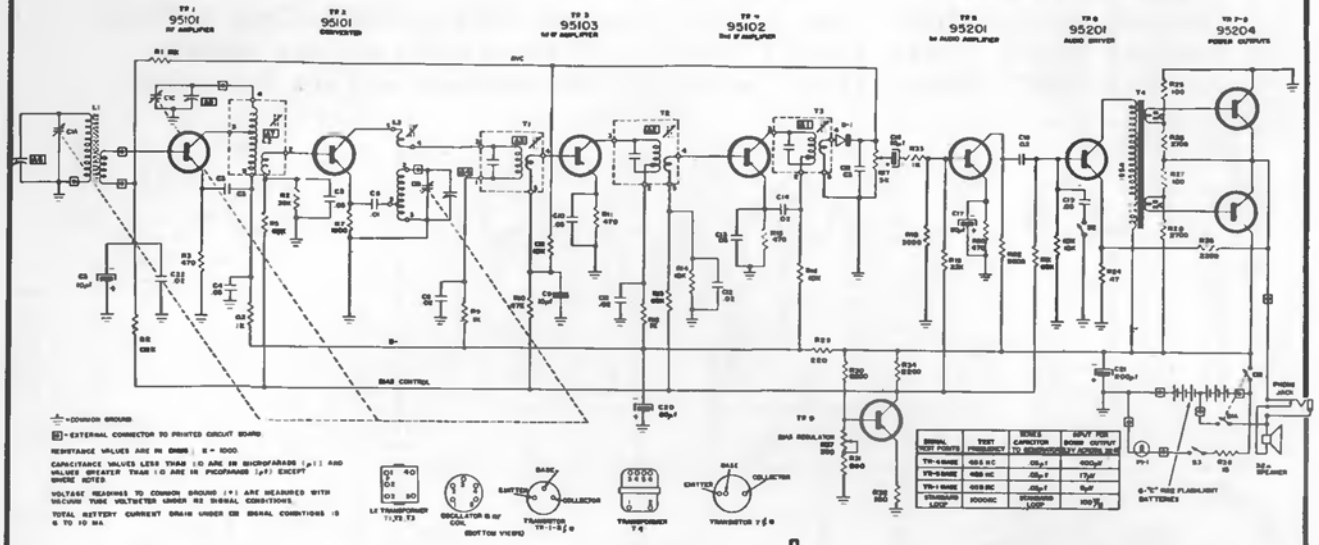

Alignment

Position of Variable	Generator Frequency	Trimmers Adj. in order shown for Max. Output	Function of Trimmer
Open	455 Kc	A1 (Top of T3)	I. F.
		A2 (Top of T2)	I. F.
		A3 (Top of T1)	I. F.
Open	1640 Kc	A4	Oscillator
1400 Kc	1400 Kc	A5	Converter
		A6	Antenna
600 Kc	600 Kc	Check Point	
		A7	Converter

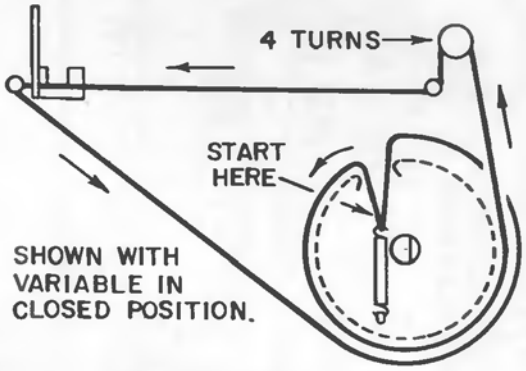

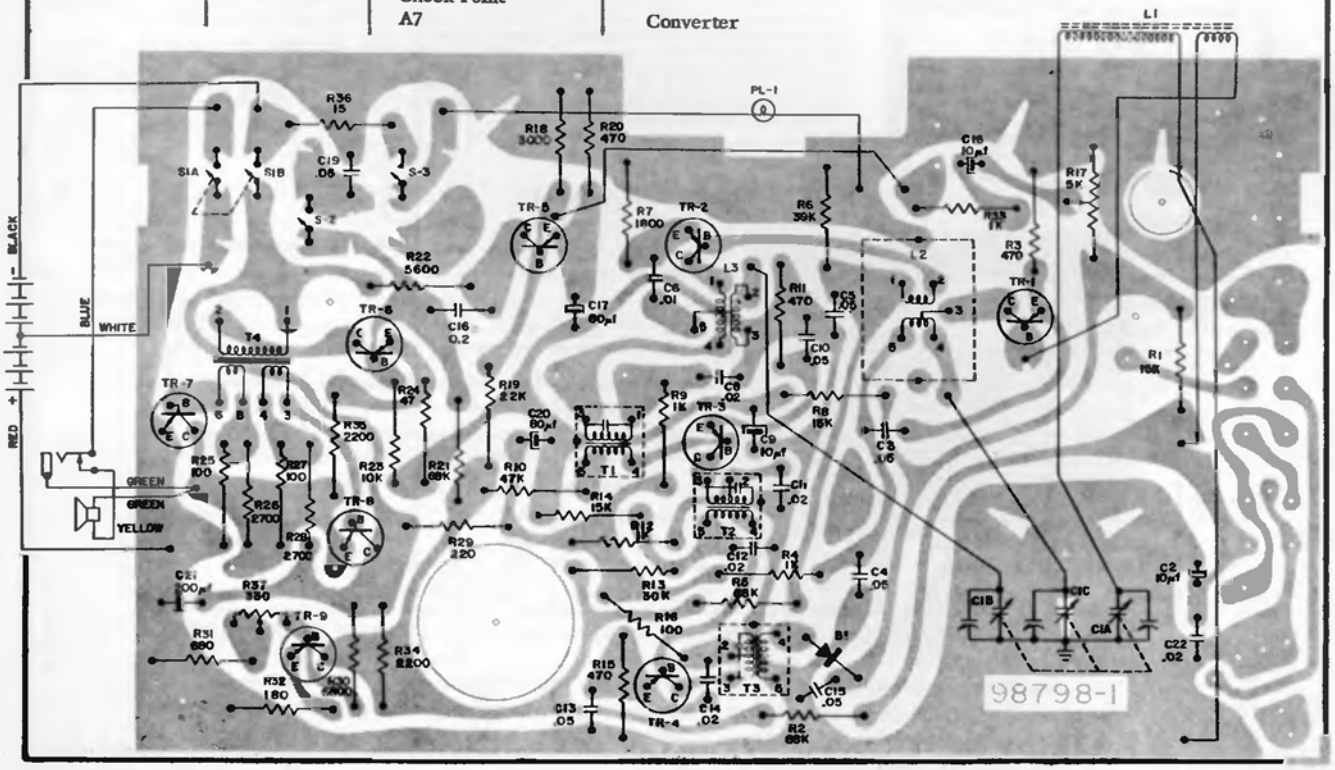

ARVIN Model 63R38, Code 1.75001

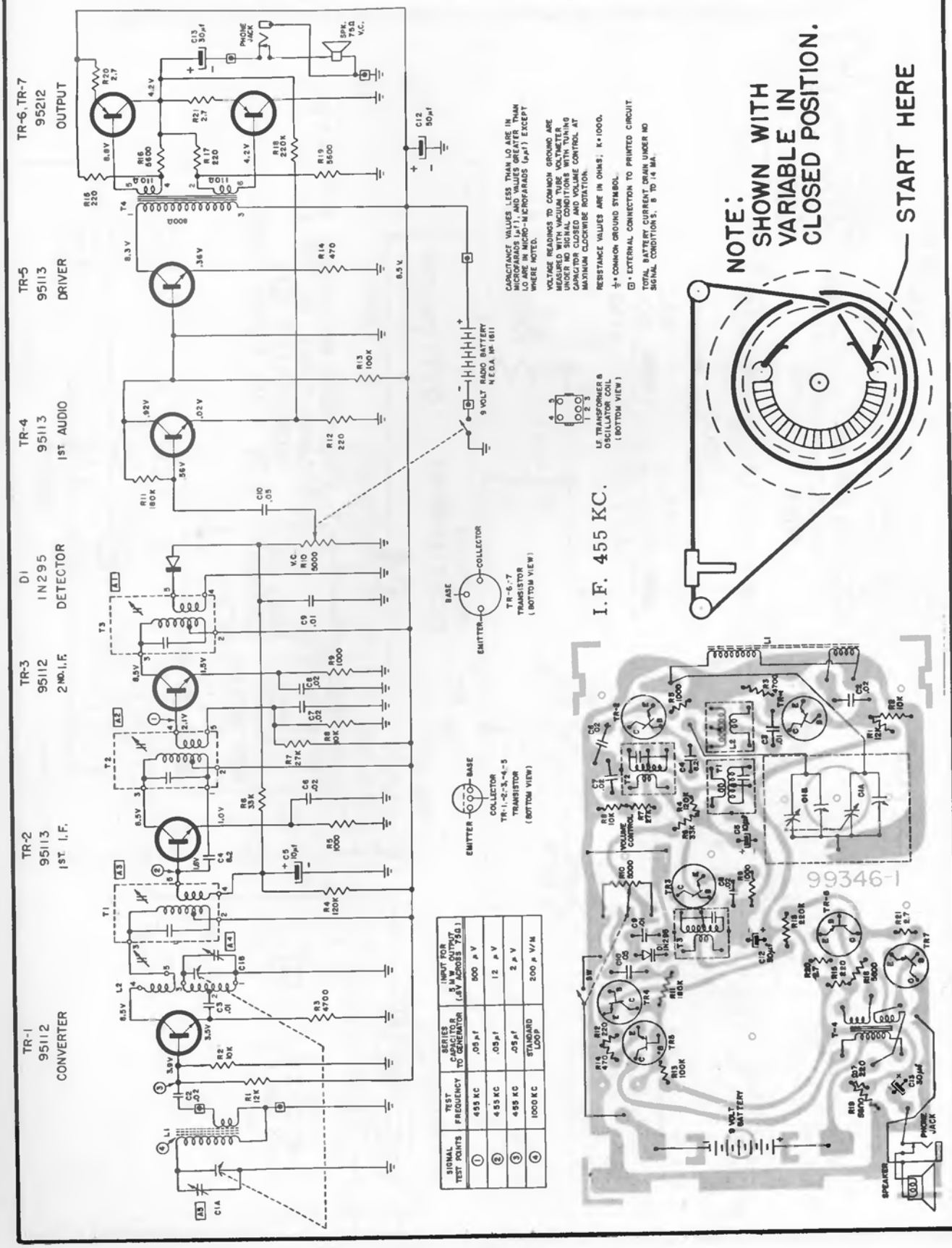

SIGNAL TEST POINTS	TEST FREQUENCY	SERIES CAPACITOR TO DETECTOR	INPUT FOR 1 V. OUTPUT (µV ACROSS 75Ω)
1	455 KC	.05µf	800 µV
2	455 KC	.05µf	12 µV
3	455 KC	.05µf	2 µV
4	1000 KC	STANDARD LOOP	200 µ V/M

ARVIN Models 83P43, 83P53, 83P55, Code 1.77001, and Model 83P15, Code 1.67201, is very similar except for tone control and motor type.

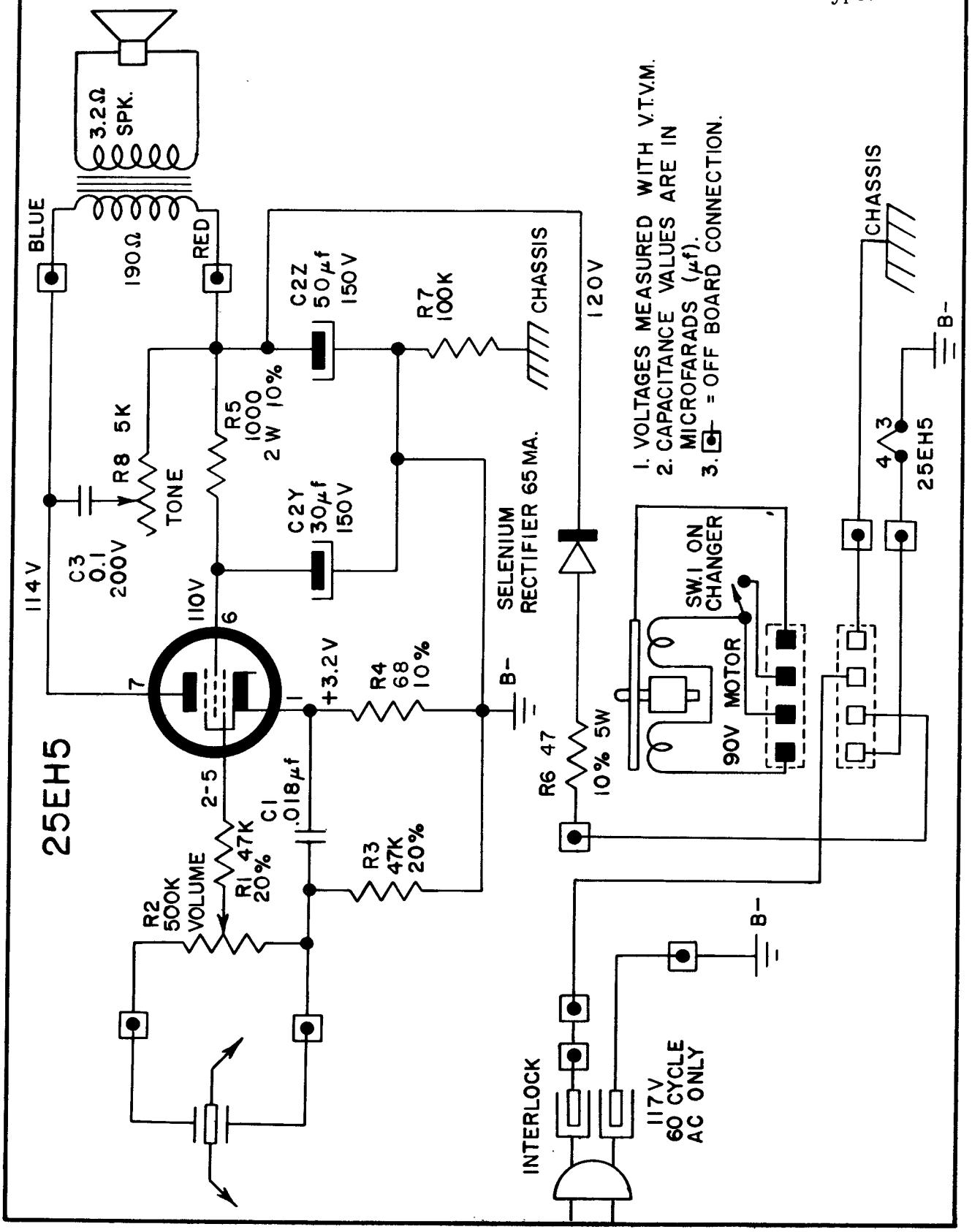

ARVIN Models 33R28, 33R29, Code 1.74301, and Model 43R43, Code 1.78001, which is very similar but includes a tone control and clock timer.

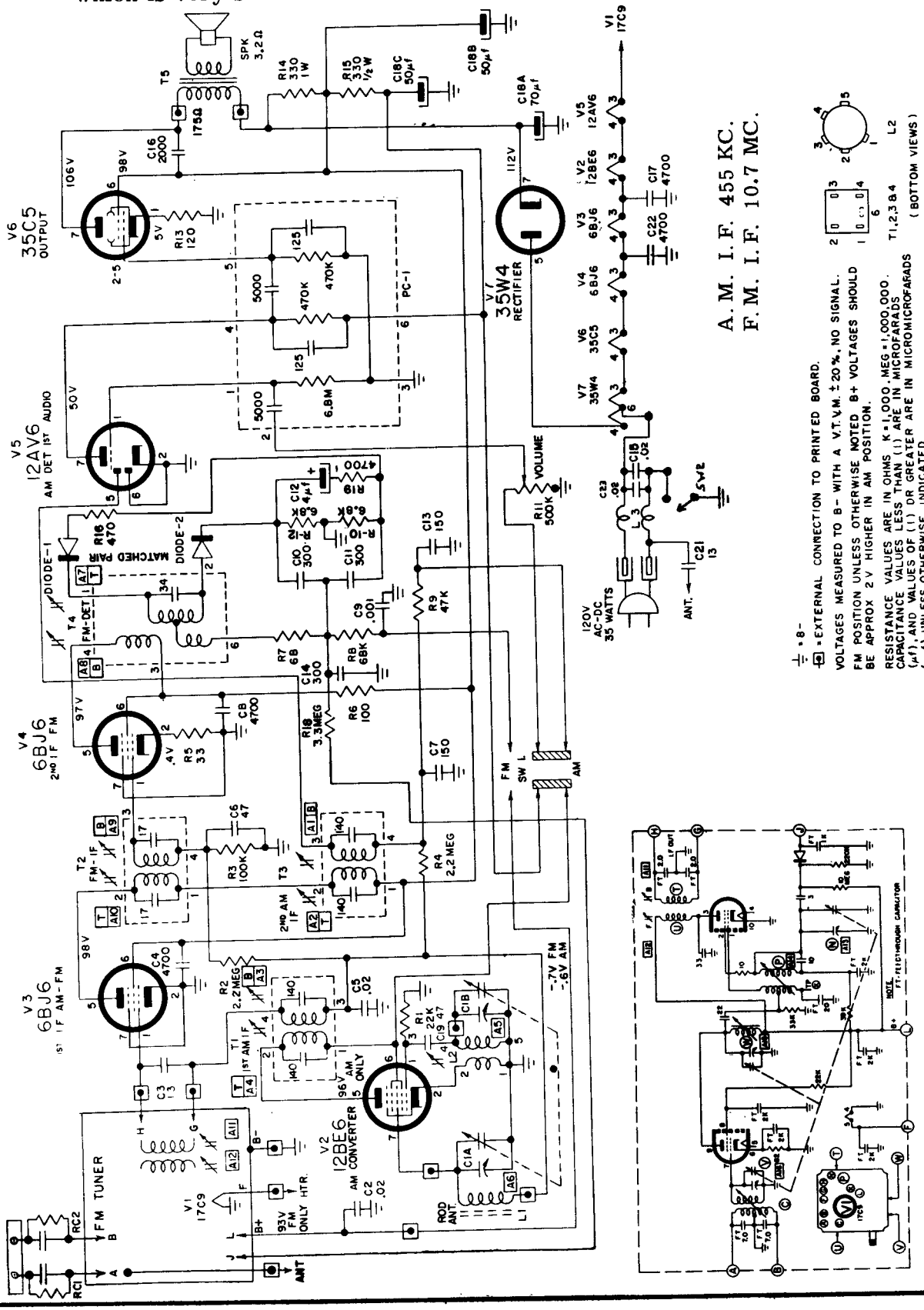

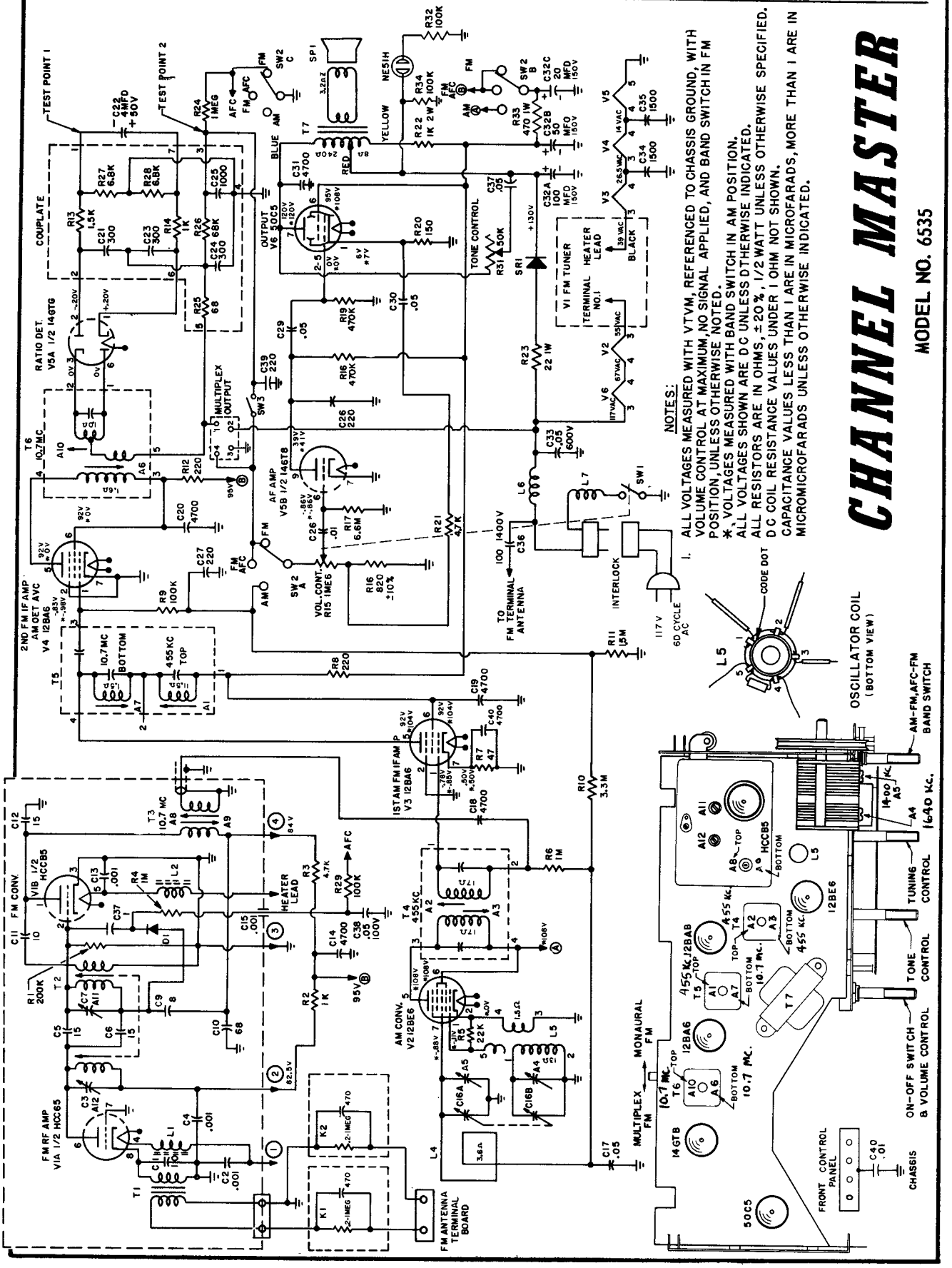
CHANNEL MASTER
MODEL NO. 6535
NOTES:
1. ALL VOLTAGES MEASURED WITH VTVM, REFERENCED TO CHASSIS GROUND, WITH VOLUME CONTROL AT MAXIMUM, NO SIGNAL APPLIED, AND BAND SWITCH IN FM POSITION, UNLESS OTHERWISE NOTED.
* VOLTAGES MEASURED WITH BAND SWITCH IN AM POSITION.
ALL VOLTAGES SHOWN ARE DC UNLESS OTHERWISE INDICATED.
ALL RESISTORS ARE IN OHMS, ±20%, 1/2 WATT UNLESS OTHERWISE SPECIFIED.
DC COIL RESISTANCE VALUES UNDER 1 OHM NOT SHOWN.
CAPACITANCE VALUES LESS THAN 1 ARE IN MICROFARADS, MORE THAN 1 ARE IN MICROMICROFARADS UNLESS OTHERWISE INDICATED.
TEST POINT 1
TEST POINT 2
COUPLATE
RATIO DET. V5A 1/2 14GTG
2ND FM IF AMP AM DET AVC V4 12BA6
FM RF AMP V1A 1/2 HCC85
FM CONV. V1B 1/2 HCC85
AM CONV. V2 12BE6
1ST AM FM IF AMP V3 12BA6
AF AMP V5B 1/2 14GT8
OUTPUT V6 50C5
TONE CONTROL
V1 FM TUNER
TERMINAL NO. 1
HEATER LEAD
BLACK
MULTIPLEX OUTPUT
VOL. CONT. R15 1ME6
TO FM TERMINAL ANTENNA
INTERLOCK
117 V 60 CYCLE AC
FM ANTENNA TERMINAL BOARD
MONAURAL FM
MULTIPLEX FM
OSCILLATOR COIL (BOTTOM VIEW)
CODE DOT
AM-FM, AFC-FM BAND SWITCH
TUNING CONTROL
TONE CONTROL
ON-OFF SWITCH & VOLUME CONTROL
CHASSIS
FRONT CONTROL PANEL

DELMONICO

MODEL 8B-2

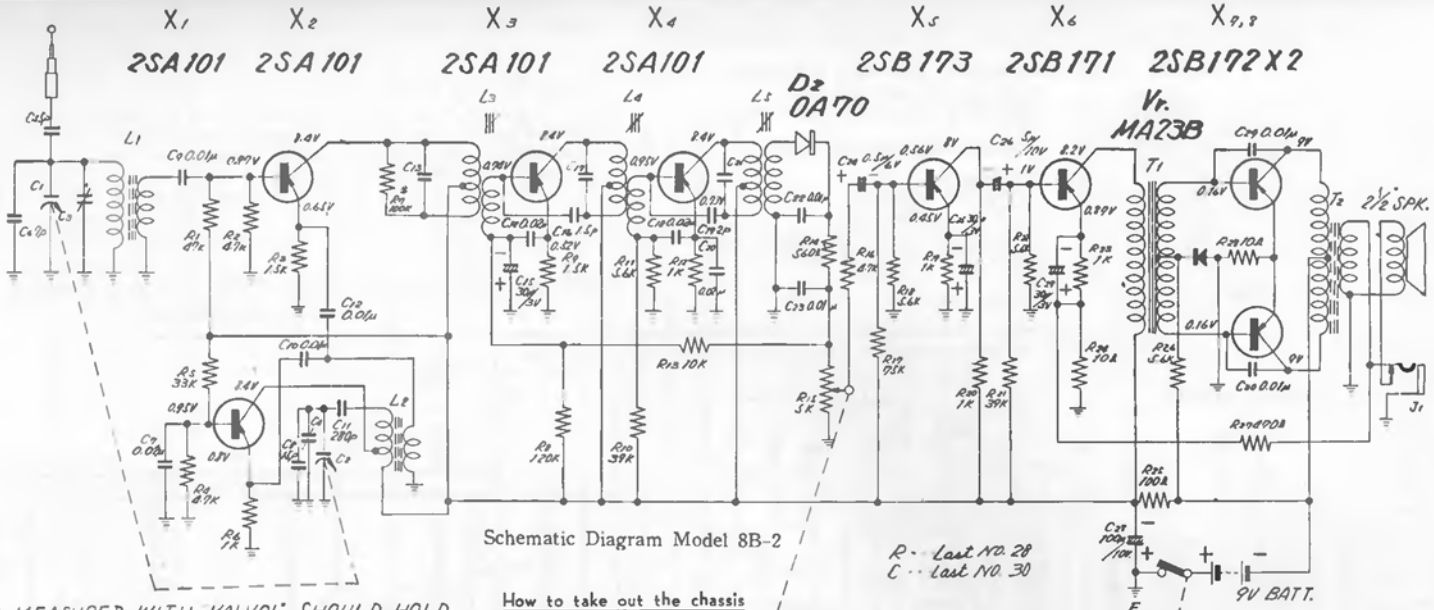

Schematic Diagram Model 8B-2

R · · Last NO. 28
C · · Last NO. 30

VOLTAGES MEASURED WITH "VALVOL" SHOULD HOLD WITH IN ± 20% WITH NEW BATTERY.

※ ADJ. RESISTOR

How to take out the chassis

1. Open the back cover of cabinet with coin or driver and remove the 3 screws A. B. C.

How to fit the dial rope

Set the variable Capacitor on maxinum capacity, fix the dial drum as shown figure and fit the dial rope in accordance with arrow marks.

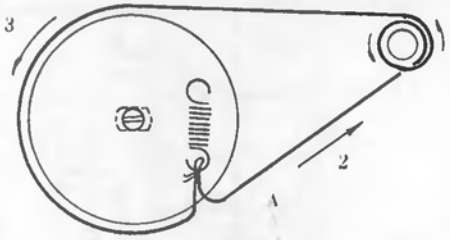

3 turns to shaft

Rope length 9 1/16"

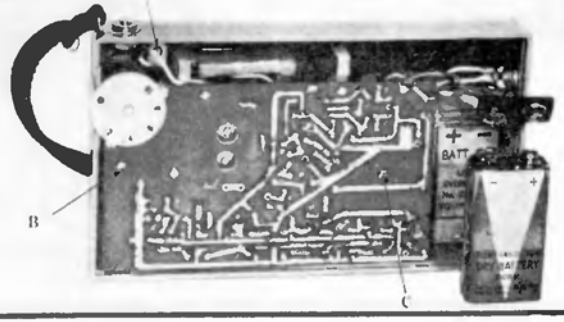

Step	Frequency Band	Input		Places to be Reguleted	Dial Pointer Setting
		Frequency	Given to		
1	I F	455 KC	Base of X_1 through 0.01 μF	L_3, L_4, L_5	Fully Open
2		535 KC	Use the standard Loop	L_2	Max.
3	M W	1680 KC	〃 〃	C_4	Fully Open
4		Repeat the step 2, 3			
5		620 KC	Use the standard Loop	L_1	620kc Signal
6	M W	1400 KC	〃 〃	C_3	1400kc Signal
7		Repeat the step 5, 6			

Note: Output power (at the terminal of voice coil) is kept on always about 10mW.

Delco Radio

BUICK Model 980463
CADILLAC Model 7282315
CORVETTE Model 985396
OLDSMOBILE Model 982137

IF RADIO IS POWERED BY BATTERY ELIMINATOR, USE 16 VOLTS FOR PROPER SOLENOID ACTION.

(Continued on the next page adjacent at right)

NOTE: ILLUS. 74 IS FUSE RESISTOR. OPEN FUSE RESISTOR MAKES TRANSISTOR COLLECTOR VOLTAGE 0 VOLTS.

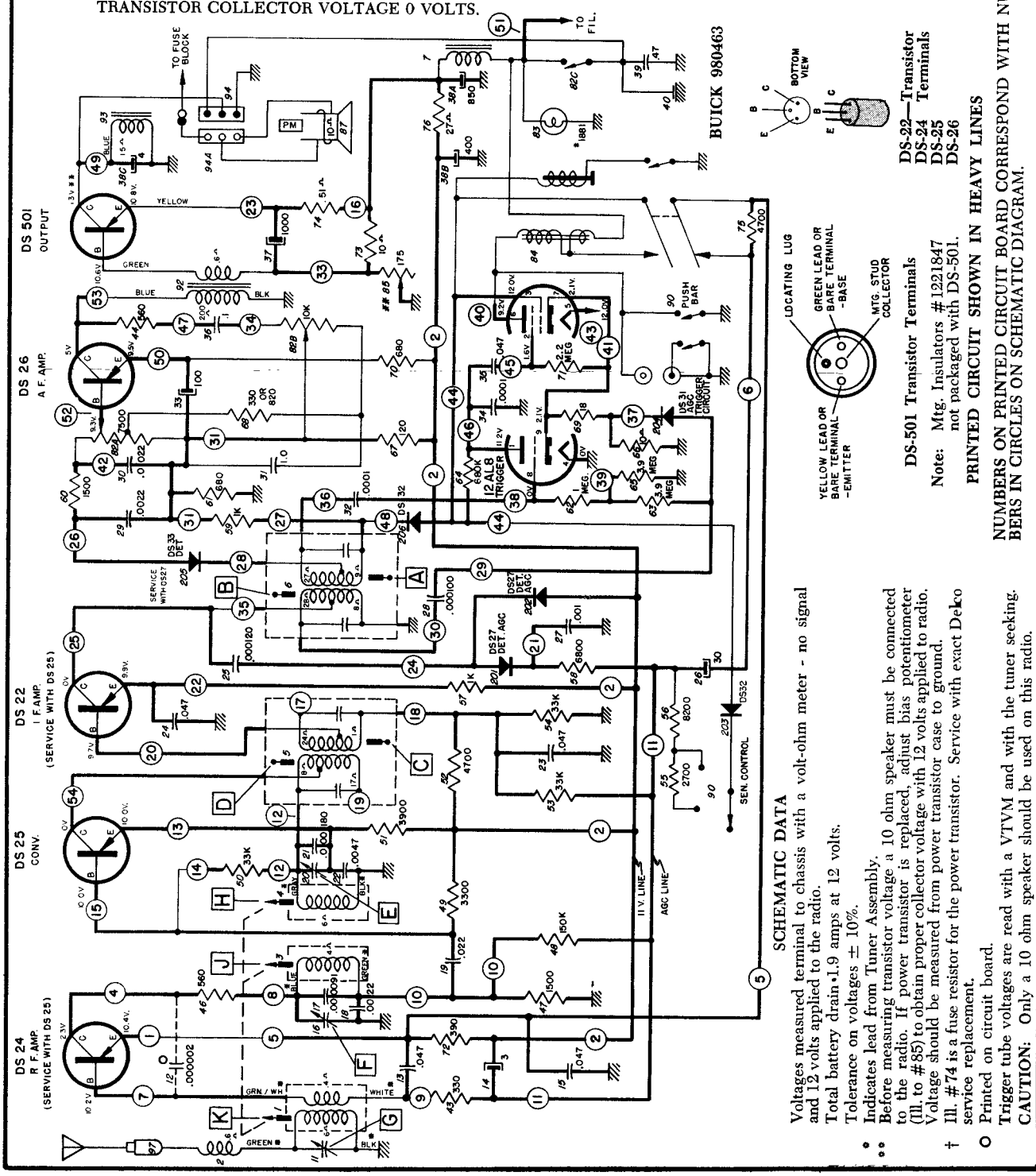

DS-22—Transistor
DS-24 Terminals
DS-25
DS-26

DS-501 Transistor Terminals

Note: Mtg. Insulators #1221847 not packaged with DS-501.

PRINTED CIRCUIT SHOWN IN HEAVY LINES

NUMBERS ON PRINTED CIRCUIT BOARD CORRESPOND WITH NUMBERS IN CIRCLES ON SCHEMATIC DIAGRAM.

SCHEMATIC DATA

Voltages measured terminal to chassis with a volt-ohm meter - no signal and 12 volts applied to the radio.

Total battery drain•1.9 amps at 12 volts.

Tolerance on voltages ± 10%.

• Indicates lead from Tuner Assembly.

•• Before measuring transistor voltage a 10 ohm speaker must be connected to the radio. If power transistor is replaced, adjust bias potentiometer (Ill. to #85) to obtain proper collector voltage with 12 volts applied to radio. Voltage should be measured from power transistor case to ground.

† Ill. #74 is a fuse resistor for the power transistor. Service with exact Delco service replacement.

O Printed on circuit board.

Trigger tube voltages are read with a VTVM and with the tuner seeking.

CAUTION: Only a 10 ohm speaker should be used on this radio.

DELCO

BUICK 980463
CADILLAC 7282315
CORVETTE 985396
OLDSMOBILE 982137

(Continued)

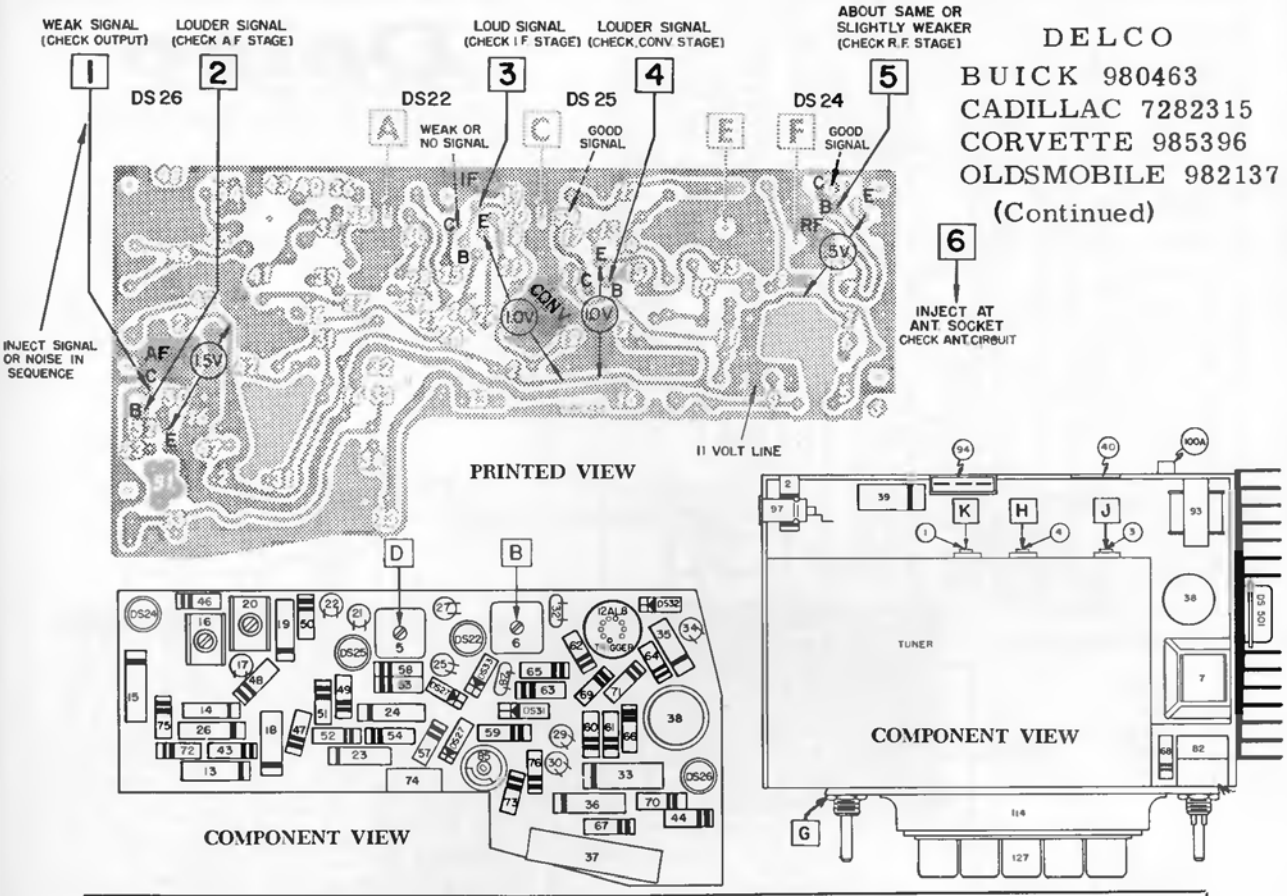

IMPORTANT: With the radio installed and the car antenna plugged in, adjust the antenna trimmer "G" for maximum volume with the radio tuned to a WEAK station between 600 KC and 1000 KC. (Prevents fading and station mixing). The antenna trimmer is located behind the dummy knob and can be adjusted from the front of the radio.

ALIGNMENT PROCEDURE

A. Connections
1. A. C. Voltmeter ..... Across speaker voice coil
2. Signal Generator ..... Connect capacitor (see chart below for value) in series with generator lead and connect to antenna terminal. Connect generator ground lead to chassis.

B. Preliminary Adjustments (in order)
1. Volume control ..... Maximum volume
2. Radio Tuning Pointer ..... Extreme right end of dial
3. Radio tuner cores ..... Rear of core 1⅝" from end of coil form. Adjustment is made using a plastic alignment tool marked 1⅝" from end.

C. Alignment Adjustments
1. Generator Output ..... Readable A.C. voltage (½ to 1 volt) across speaker voice coil
2. Proceed according to chart - - -

Step	Capacitor	Signal Generator Frequency	Tune Receiver to	Adjust in Sequence
a.	.1 mfd.	262 KC	Hi freq. stop	A, B, C, D
b.	82 mmfd.	1615 KC	Hi freq. stop	E, F, G
c.	82 mmfd.	600 KC	Sig. Gen. Freq.	J, K
d.	82 mmfd.	1615 KC	Sig. Gen. Freq.	F, G
e.	82 mmfd.	900 KC	Sig. Gen. Freq.	Pointer Adjustment

3. Pointer Adjustment ..... With incoming 900 KC signal, insert a screwdriver in the slot of the pointer calibration adjustment link (illustration #124) and twist until the pointer is in line with "9" on the radio dial.
4. Antenna Adjustment ..... See notice above

Delco

(Continued on the next page)

DELCO, for complete list of models and additional data see next page at right.

Voltages Measured to Chassis with a VOM - Antenna Disconnected and 12 Volts Applied to Radio.

Total Battery Drain 1.3 Amps at 12 Volts.

Illustration 100 is Fuse Resistor for DS-501. Open Fuse Resistor Causes 0 Volts on DS-501 collector. Service With Exact Delco Part.

When DS-501 is Replaced, Set Bias Pot (Illus. 97) for Reading of 1.3V. on Transistor Case with 12 Volts Applied to Radio and 10 Ohm Speaker Connected.

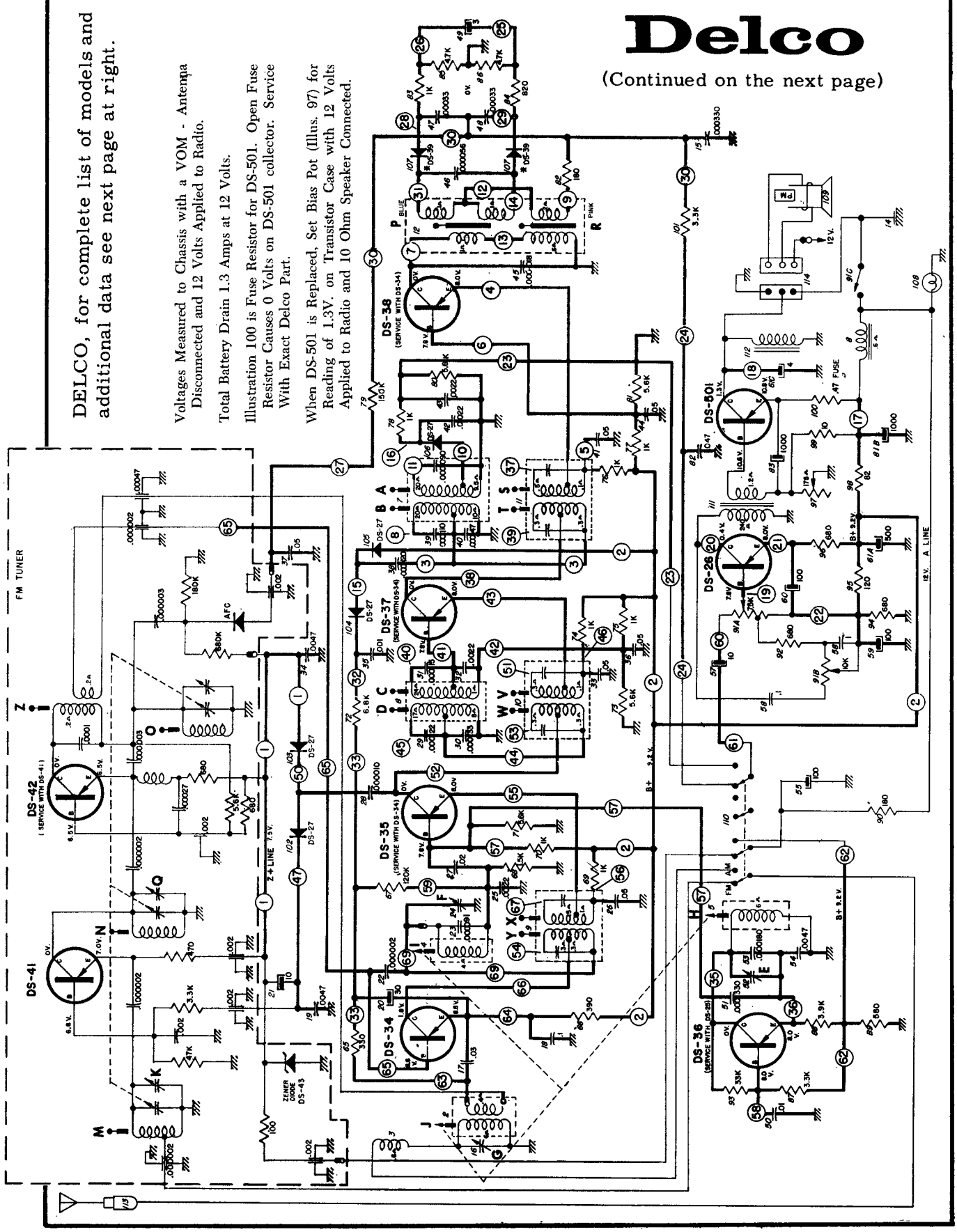

Delco

BUICK Models 980626, 980635
CADILLAC Model 7283295
CHRYSLER Model 333
DODGE Models 331, 332
PLYMOUTH Model 300
CORVETTE Model 985686
OLDSMOBILE Model 982212

(Continued from preceding page adjacent at left)

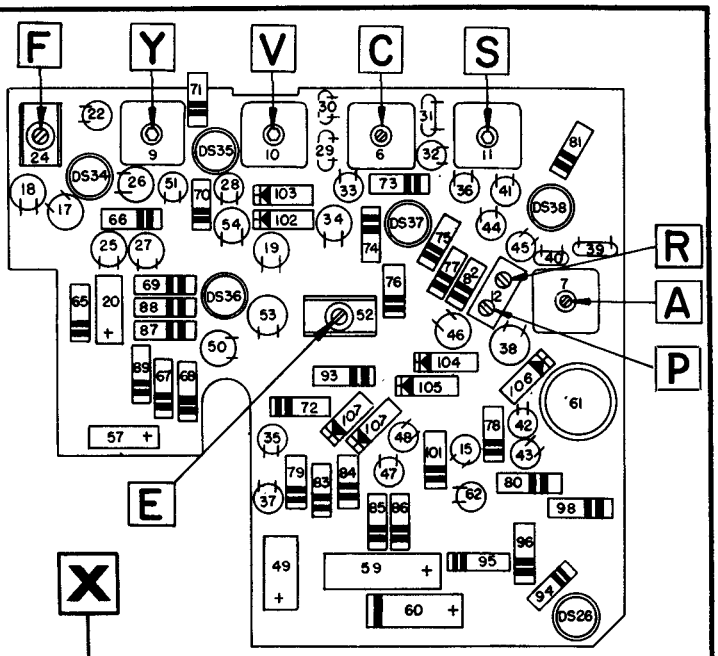

CIRCUIT BOARD
(Parts View)

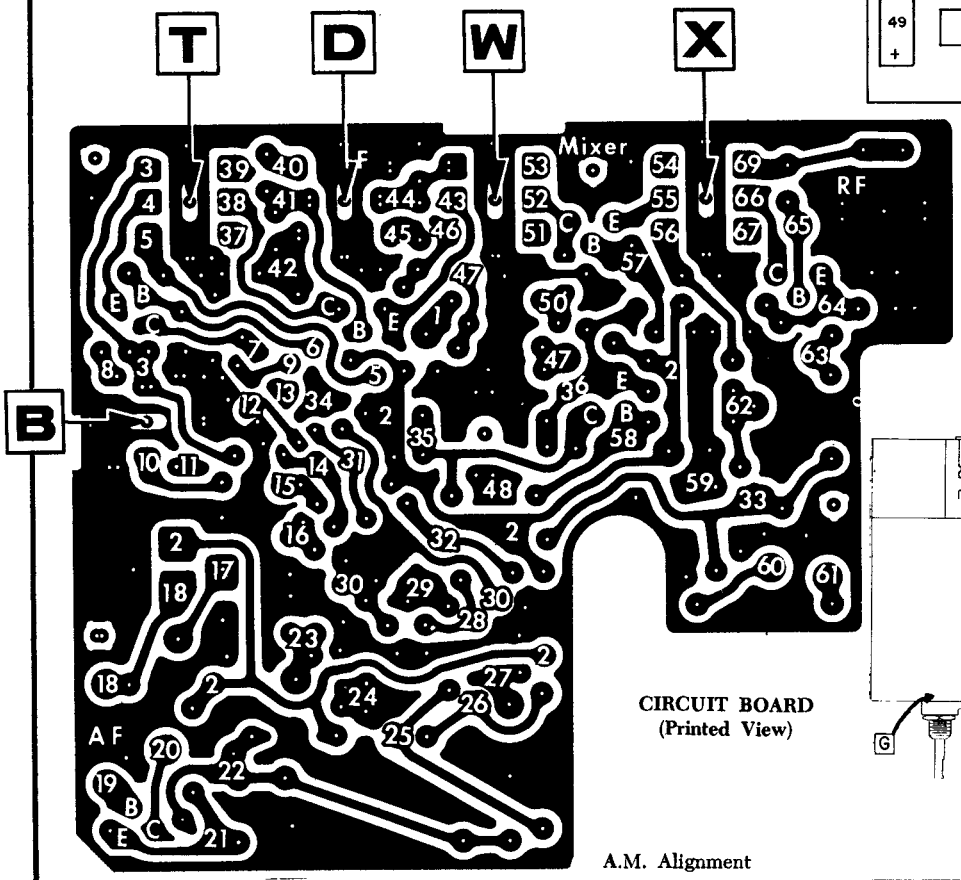

CIRCUIT BOARD
(Printed View)

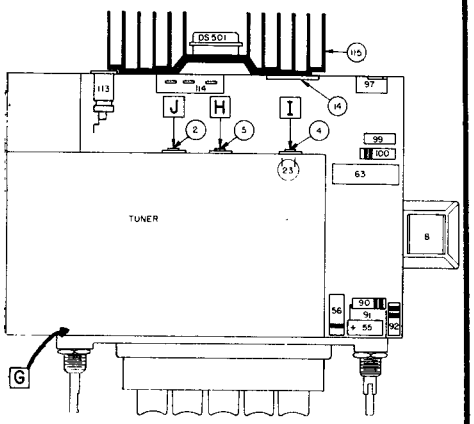

COMPONENT VIEW

A.M. Alignment

Step	Capacitor	Signal Generator Frequency	Tune Receiver to	Adjust for Maximum in Sequence
a.	.1 mfd.	262 KC	Hi freq. stop	A, B, C, D
b.	56 mmfd.	1615 KC	Hi freq. stop	E, F, G
c.	56 mmfd.	600 KC	Sig. Gen. Freq.	I, J
d.	56 mmfd.	1615 KC	Sig. Gen. Freq.	F, G
e.	56 mmfd.	900 KC	Sig. Gen. Freq.	Pointer Adjustment

F.M. Alignment

Connections

D.C. Voltmeter ..... Positive lead to Orange wire (island #24)
Negative lead to chassis. Use Lowest Scale.

Generator Output (AM with no modulation or FM) set to 10.7 mc. ..... Connect 56 mmfd. capacitor in series with generator lead and connect to antenna terminal. Connect generator ground lead to chassis.

Alignment Adjustments

1. Adjust in sequence for maximum voltage ..... R, S, T, V, W, X, Y, Z
2. Ratio detector transformer ..... Remove generator and adjust blue (P) slug for zero volts.
3. Tuner ..... K, Q for maximum on a weak station near the top of the dial with antenna connected.

Delco Radio

CHEVROLET Models 985431, 985453
CORVAIR Models 985447, 985443
OLDSMOBILE Model 982149
STUDEBAKER Models AC-3351, AC-3353
PONTIAC Model 983874

(Continued on the next page adjacent at right)

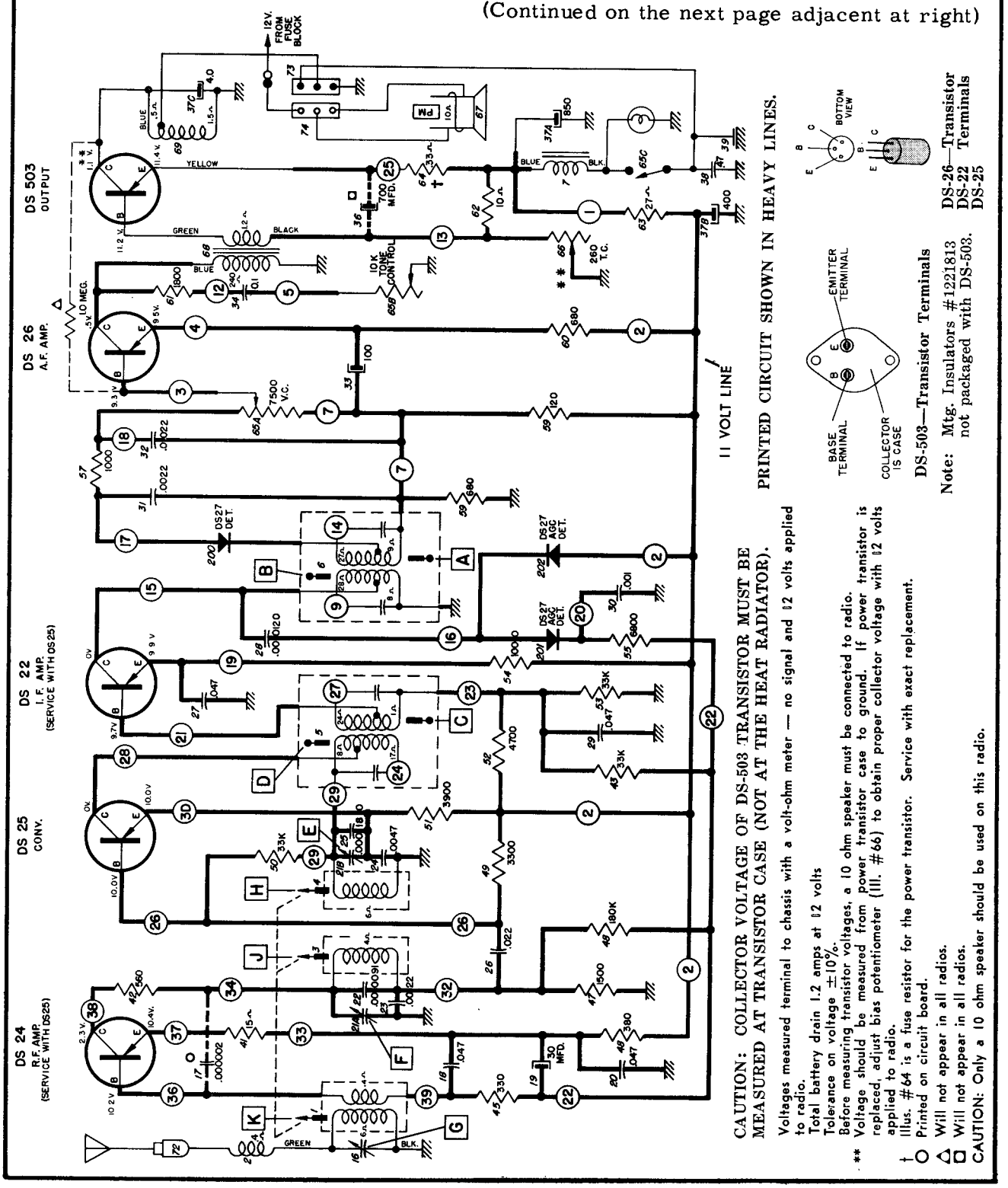

PRINTED CIRCUIT SHOWN IN HEAVY LINES.

DS-503—Transistor Terminals

Note: Mtg. Insulators #1221813 not packaged with DS-503.

DS-26—Transistor
DS-22 Terminals
DS-25

CAUTION: COLLECTOR VOLTAGE OF DS-503 TRANSISTOR MUST BE MEASURED AT TRANSISTOR CASE (NOT AT THE HEAT RADIATOR).

Voltages measured terminal to chassis with a volt-ohm meter — no signal and 12 volts applied to radio.
Total battery drain 1.2 amps at 12 volts
Tolerance on voltage ±10%.
Before measuring transistor voltages, a 10 ohm speaker must be connected to radio.
** Voltage should be measured from power transistor case to ground. If power transistor is replaced, adjust bias potentiometer (Ill. #66) to obtain proper collector voltage with 12 volts applied to radio.
† Illus. #64 is a fuse resistor for the power transistor. Service with exact replacement.
○ Printed on circuit board.
△ Will not appear in all radios.
□ Will not appear in all radios.
CAUTION: Only a 10 ohm speaker should be used on this radio.

DELCO, various models, continued from preceding page adjacent at left.

ALIGNMENT PROCEDURE

A. C. Voltmeter—Across speaker voice coil.
Signal Generator—Connect capacitor (see chart below for value) in series with generator lead and connect to antenna terminal. Connect generator ground lead to chassis.

Volume control—Maximum volume
Radio Tuning Pointer—Extreme right end of dial.
Radio tuner cores—Rear of core 1⅜" from end of coil form. Adjustment is made using a plastic alignment tool marked 1⅜" from end.

Generator Output—Readable A.C. voltage (½ to 1 volt) across speaker voice coil
Proceed according to chart—

STEP	CAPACITOR	SIGNAL GENERATOR FREQUENCY	TUNE RECEIVER TO	ADJUST IN SEQUENCE
a.	.1 mfd.	262 KC	Hi freq. stop	A, B, C, D
b.	68 mmfd.	1615 KC	Hi freq. stop	E, F, G
c.	68 mmfd.	600 KC	Sig. Gen. Freq.	J, K
d.	68 mmfd.	1615 KC	Sig. Gen. Freq.	F, G
e.	68 mmfd.	900 KC	Sig. Gen. Freq.	Pointer Adjustment

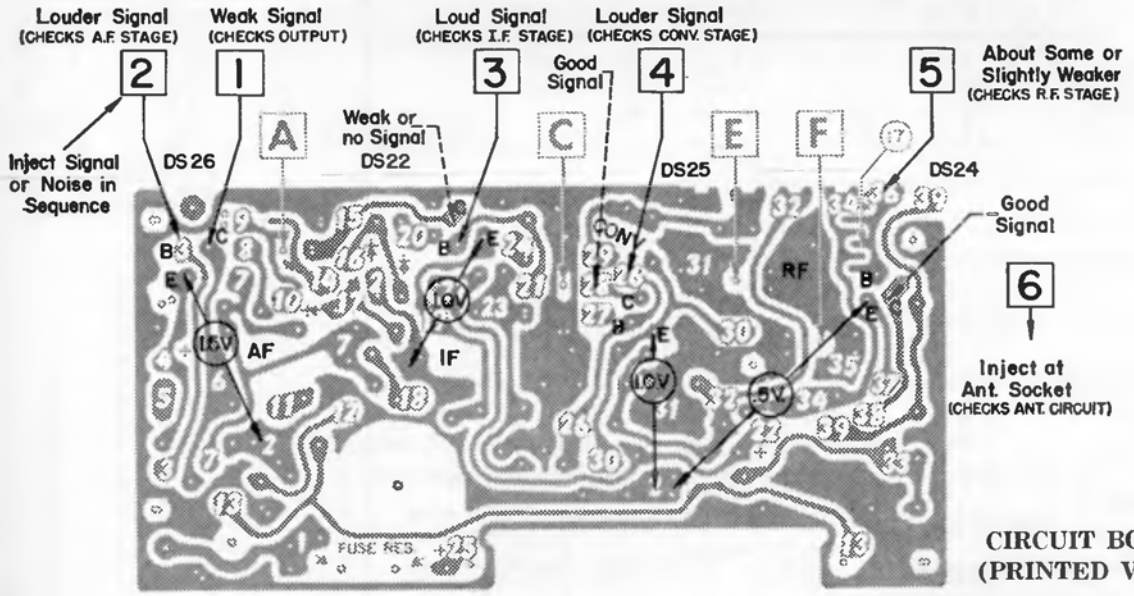

CIRCUIT BOARD (PRINTED VIEW)

NUMBERS IN SQUARES ARE MAJOR TEST POINTS FOR STAGE ISOLATION—INJECT SIGNAL GENERATOR.

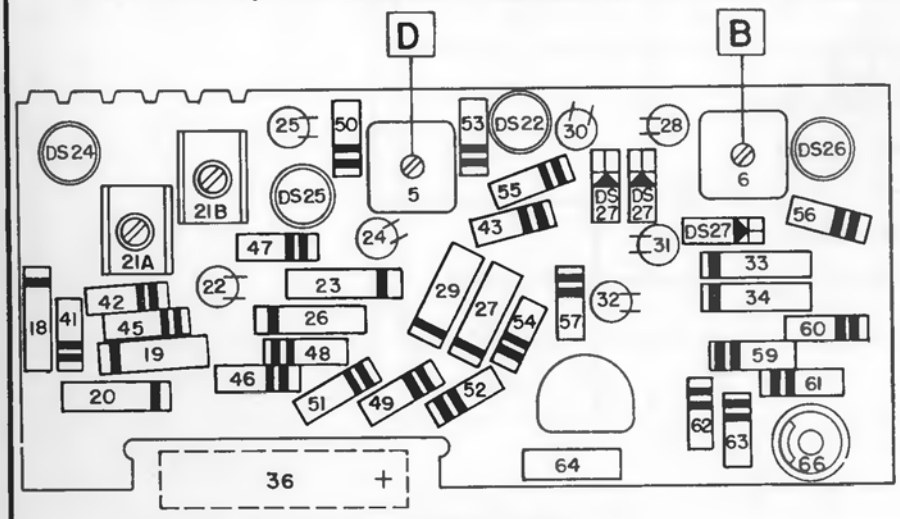

CIRCUIT BOARD COMPONENT VIEW

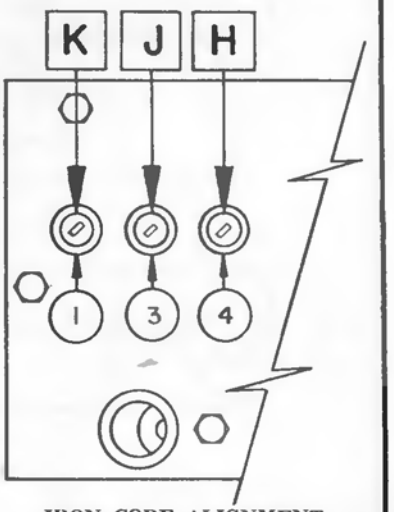

IRON CORE ALIGNMENT

CAUTION: COLLECTOR VOLTAGE OF DS-501 TRANSISTOR SHOULD BE MEASURED AT TRANSISTOR CASE (NOT AT THE HEAT RADIATOR).

Delco

BUICK Models 980462, 980464
CHEVROLET 985432, 985455, 985471
CORVAIR 985449, GMC Truck 2234003
OLDSMOBILE Model 982136
PONTIAC Models 983873, 983875
STUDEBAKER AC-3352, AC-3354, AC-3377

(Continued on the next page at right)

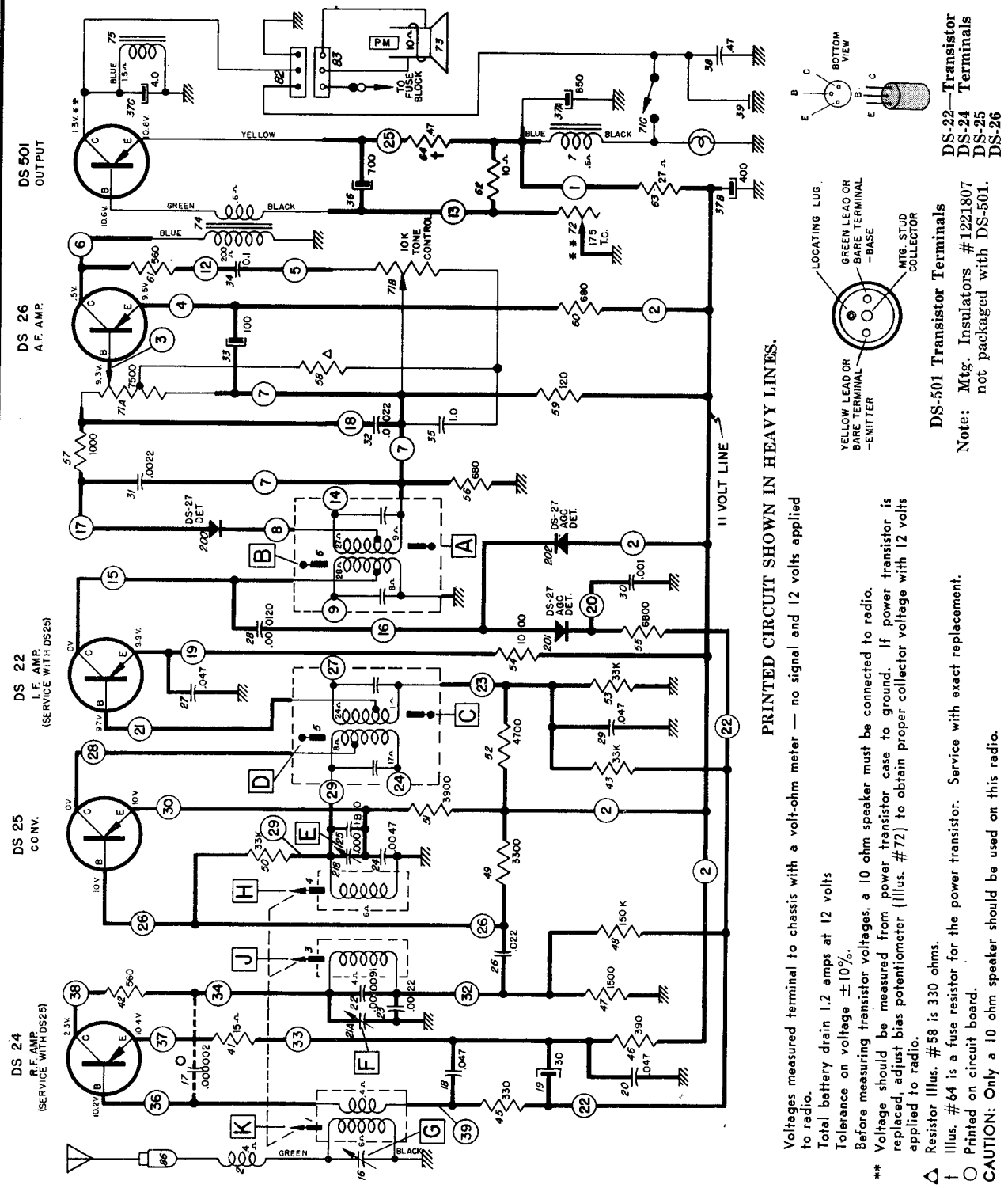

PRINTED CIRCUIT SHOWN IN HEAVY LINES.

Voltages measured terminal to chassis with a volt-ohm meter — no signal and 12 volts applied to radio.
Total battery drain 1.2 amps at 12 volts
Tolerance on voltage ±10%.
Before measuring transistor voltages, a 10 ohm speaker must be connected to radio.
** Voltage should be measured from power transistor case to ground. If power transistor is replaced, adjust bias potentiometer (Illus. #72) to obtain proper collector voltage with 12 volts applied to radio.
△ Resistor Illus. #58 is 330 ohms.
† Illus. #64 is a fuse resistor for the power transistor. Service with exact replacement.
○ Printed on circuit board.
CAUTION: Only a 10 ohm speaker should be used on this radio.

DELCO, Material on various models continued from preceding page at left

ALIGNMENT PROCEDURE

A. C. Voltmeter—Across speaker voice coil.
Signal Generator—Connect capacitor (see chart below for value) in series with generator lead and connect to antenna terminal. Connect generator ground lead to chassis.
Volume control—Maximum volume
Radio Tuning Pointer—Extreme right end of dial.
Radio tuner cores—Rear of core 1⅜" from end of coil form. Adjustment is made using a plastic alignment tool marked 1⅜" from end.
Generator Output—Readable A.C. voltage (½ to 1 volt) across speaker voice coil
Proceed according to chart—

STEP	CAPACITOR	SIGNAL GENERATOR FREQUENCY	TUNE RECEIVER TO	ADJUST IN SEQUENCE
a.	.1 mfd.	262 KC	Hi freq. stop	A, B, C, D
b.	82 mmfd.	1615 KC	Hi freq. stop	E, F, G
c.	82 mmfd.	600 KC	Sig. Gen. Freq.	J, K
d.	82 mmfd.	1615 KC	Sig. Gen. Freq.	F, G
e.	82 mmfd.	900 KC	Sig. Gen. Freq.	Pointer Adjustment

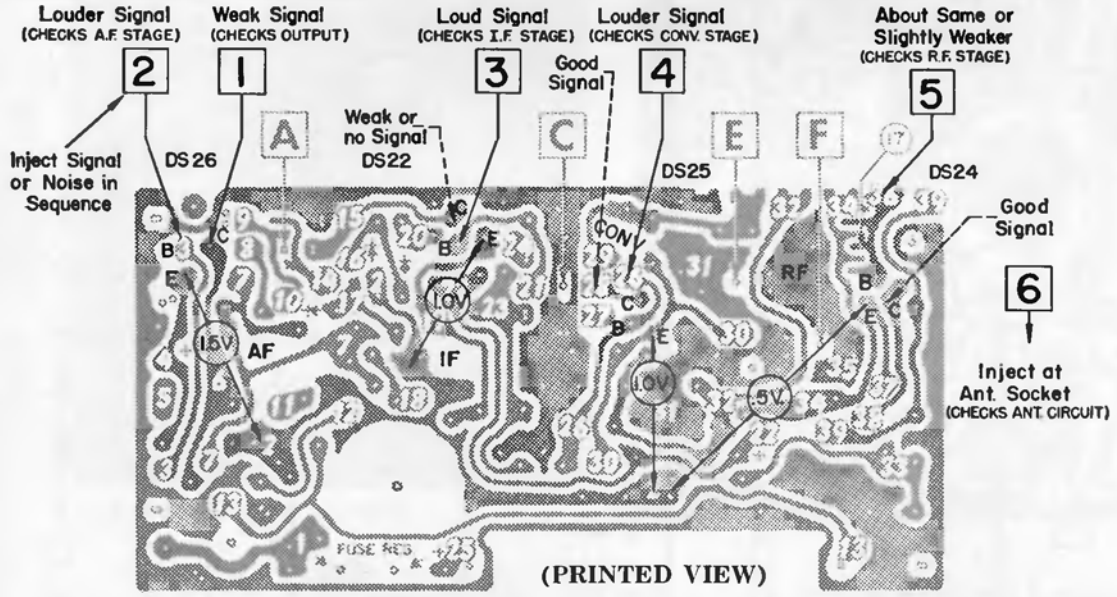

(PRINTED VIEW)

NUMBERS IN SQUARES ARE MAJOR TEST POINTS FOR STAGE ISOLATION—INJECT SIGNAL GENERATOR.

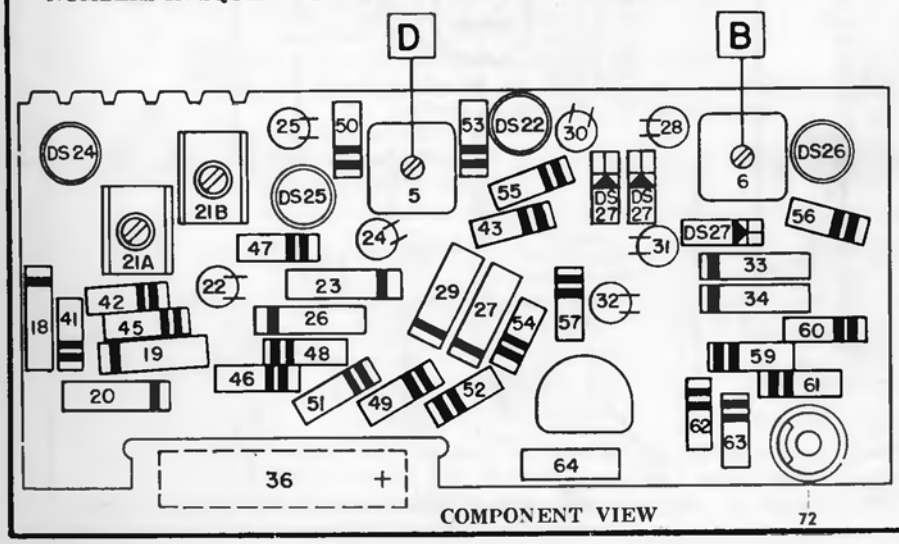

COMPONENT VIEW

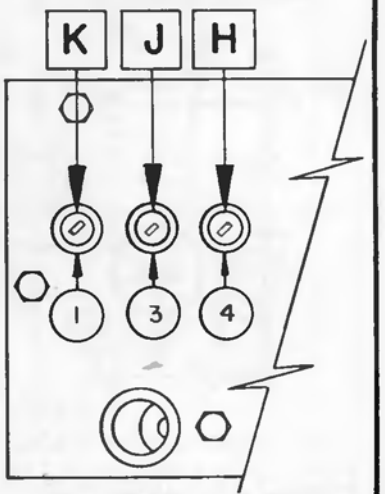

IRON CORE ALIGNMENT

DELCO Buick Model 980655 Diagram, Continued on next page at right

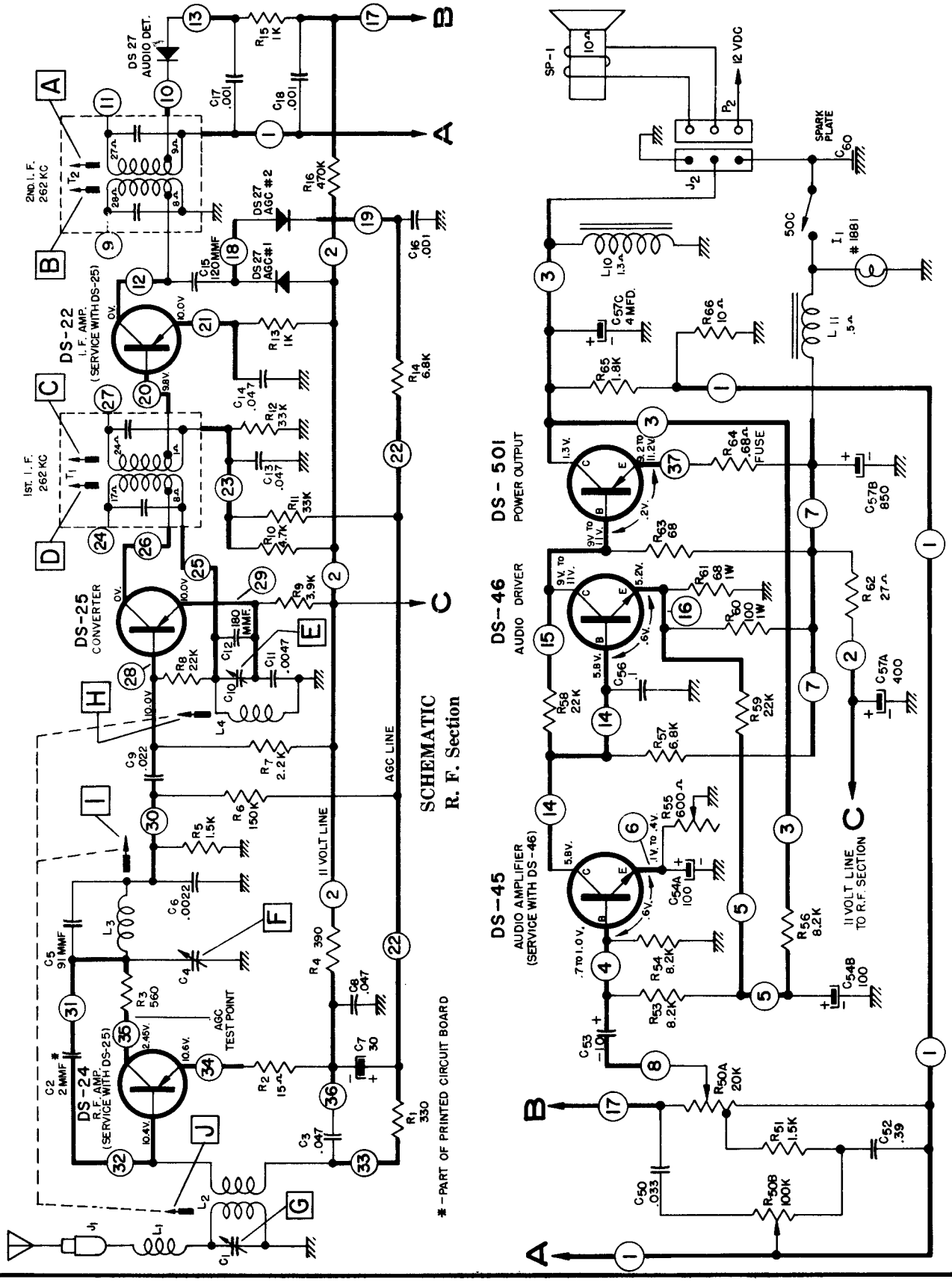

DELCO Buick Model 980655 Service Material, Continued from preceding page

CAUTION: Only a 10 ohm speaker should be used on this radio.
Illus. R-64 is a fuse resistor for the power transistor. Service with exact replacement.
Voltages measured terminal to chassis with a volt-ohm meter — no signal and 12 volts applied to radio.
Total battery drain 1.2 amps at 12 volts

Tolerance on voltage ±10%, Capacitors in mfd., Resistors in ohms.
Before measuring transistor voltages, a 10 ohm speaker must be connected to radio.
Voltage should be measured from power transistor case to ground. If power transistor is replaced, adjust bias potentiometer (Illus. R-55) to obtain proper collector voltage with 12 volts applied to radio.

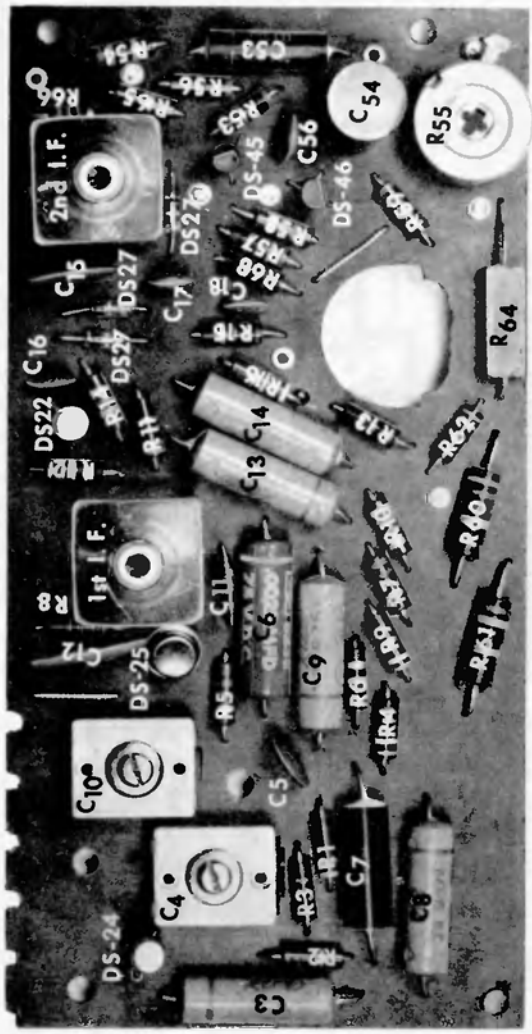

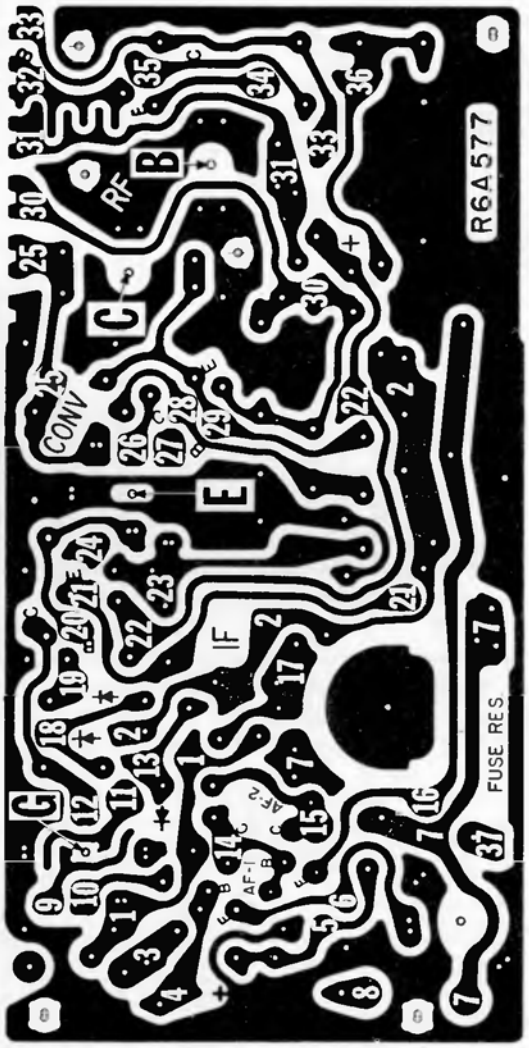

ALIGNMENT PROCEDURE

A. Connections
1. A. C. Voltmeter—Across speaker coil.
2. Signal Generator—Connect capacitor (see chart below for value) in series with generator lead and connect to antenna terminal. Connect generator ground lead to chassis.

B. Preliminary Adjustments (in order)
1. Volume control—Maximum volume
2. Radio Tuning Pointer—Extreme right end of dial.
3. Radio tuner cores—Rear of core 1⅜" from end of coil form. Adjustment is made using a plastic alignment tool marked 1⅜" from end.

C. Alignment Adjustments
1. Generator Output—Readable A.C. voltage (½ to 1 volt) across speaker voice coil
2. Proceed according to chart—

STEP	CAPACITOR	SIGNAL GENERATOR FREQUENCY	TUNE RECEIVER TO	ADJUST IN SEQUENCE
a.	.1 mfd.	262 KC	Hi freq. stop	A, B, C, D
b.	82 mmfd.	1615 KC	Hi freq. stop	E, F, G
c.	82 mmfd.	600 KC	Sig. Gen. Freq.	I, J
d.	82 mmfd.	1615 KC	Sig. Gen. Freq.	F, G

IMPORTANT: With the radio installed and the car antenna plugged in, adjust the antenna trimmer "G" for maximum volume with the radio tuned to a weak station between 600 KC and 1000 KC. (Prevents fading and station mixing). The antenna trimmer is located behind the dummy knob and can be adjusted from the front of the radio.

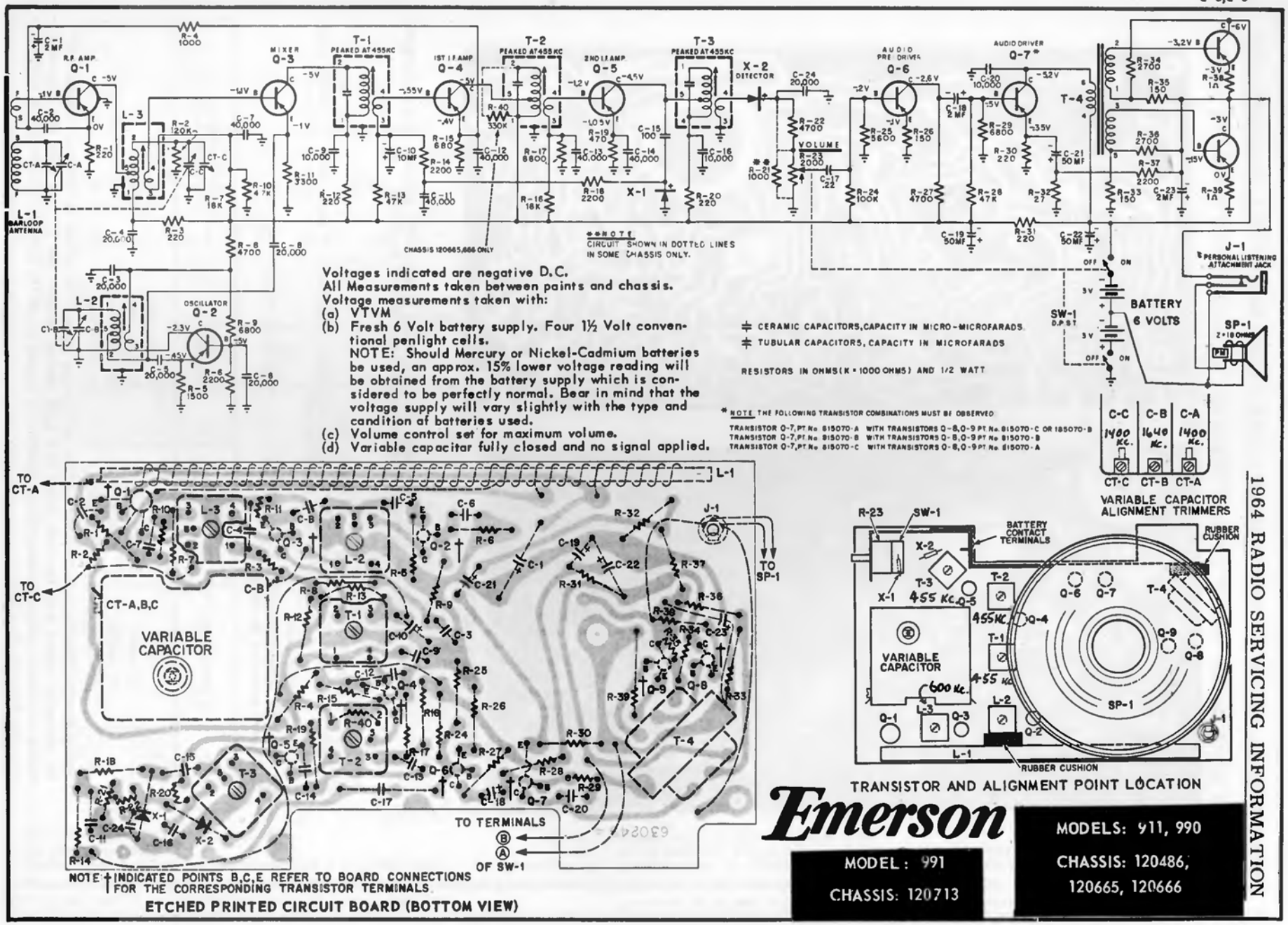

Emerson

MODEL: 991
CHASSIS: 120713

MODELS: 911, 990
CHASSIS: 120486, 120665, 120666

EMERSON Models G-1700, G-1709, using Chassis 120685, and Model G-1713 using Chassis 120700

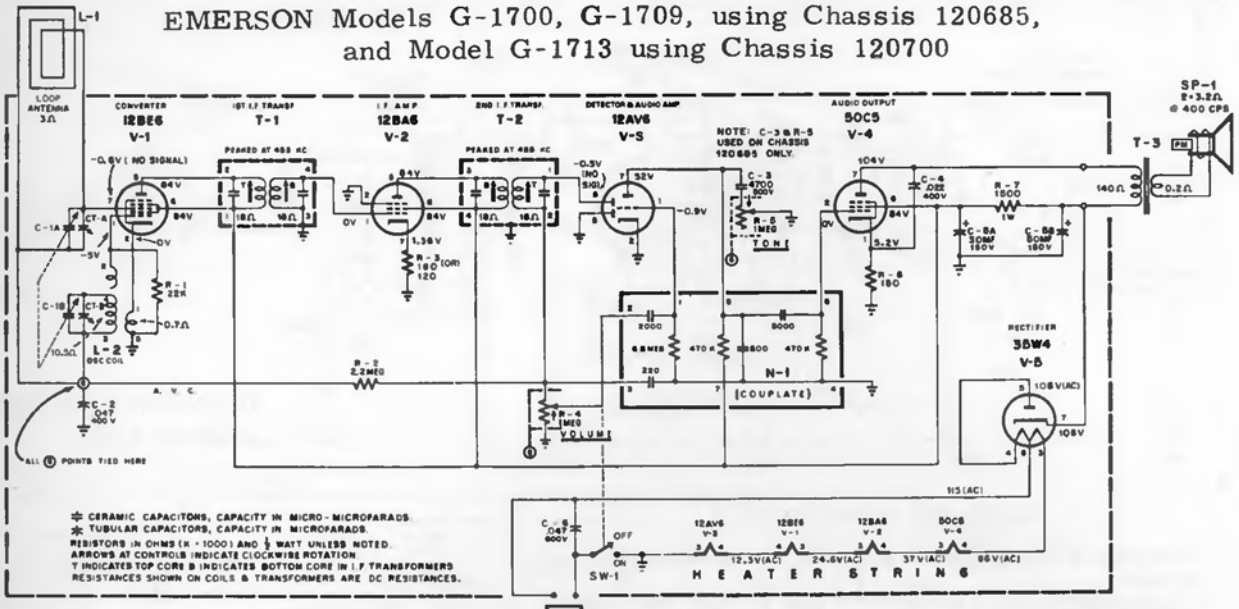

CONDITIONS FOR VOLTAGE AND RESISTANCE READINGS

1. Voltages indicated are positive D.C., resistances in ohms unless otherwise indicated.
2. Measurements taken with Valtohmyst or equivalent VTVM.
3. All measurement taken between points indicated and B minus (low side of volume control), unless otherwise indicated.
4. Voltage readings indicated an schematic were taken with:
   (A) Line voltage set at 115 volts AC,
   (B) Volume control set for minimum volume,
   (C) Tuning capacitor fully closed and no signal applied.

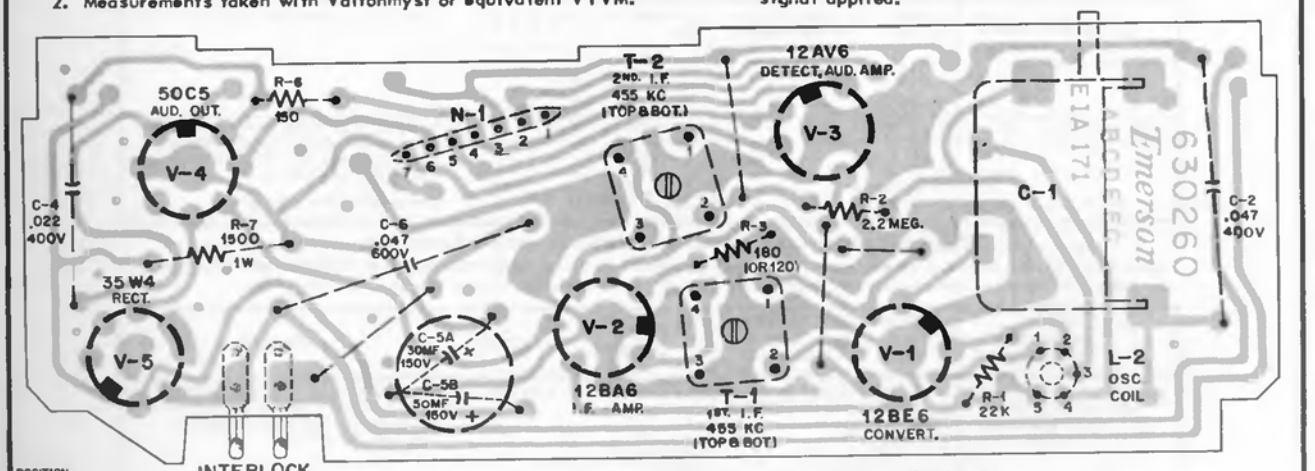

ETCHED PRINTED CIRCUIT CHASSIS (BOTTOM VIEW)

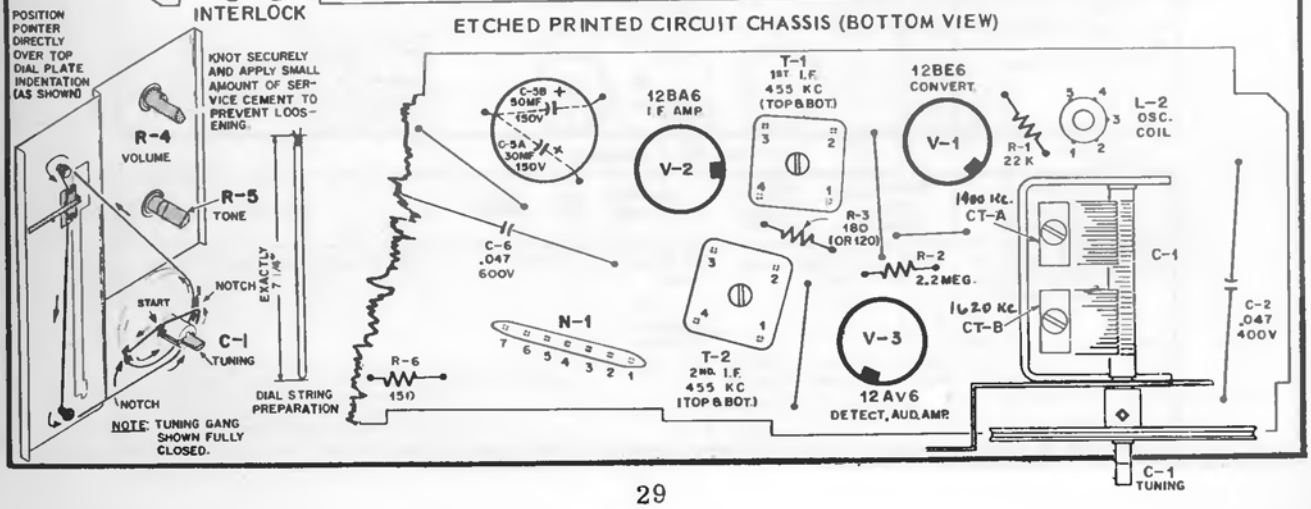

EMERSON Model G-1707

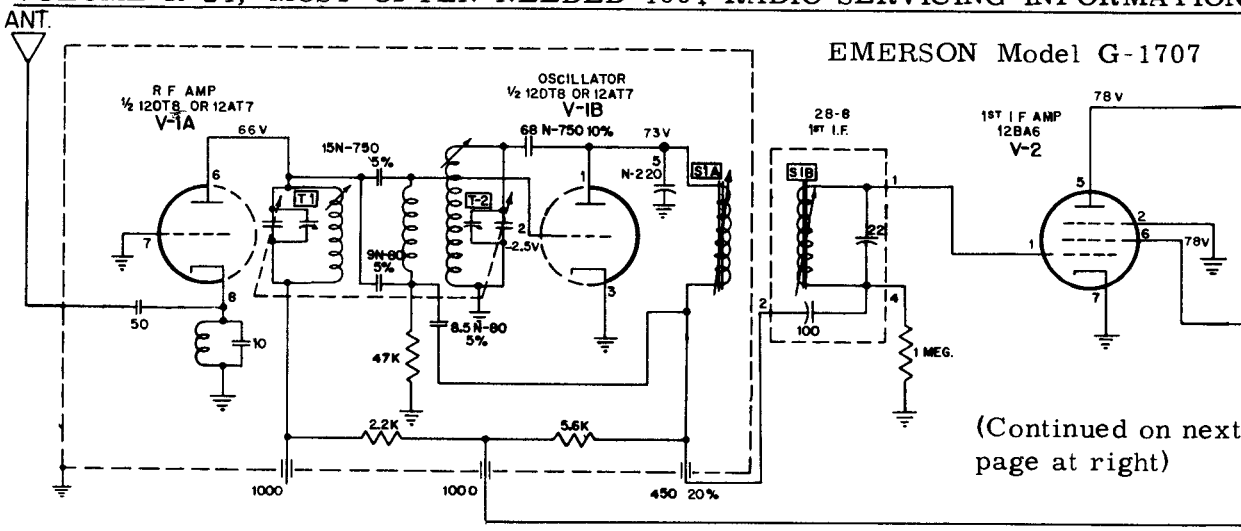

(Continued on next page at right)

ALIGNMENT INSTRUCTIONS

1) Allow chassis and equipment to be used at least 15 minutes for warm-up.
2) Maintain output of signal generator at a point no higher than required to produce a usable reading and use only insulated alignment tools for adjusting.
3) Use an isolation transformer between the chassis and the AC line, if available. If no isolation transformer is to be used, insert a .1 mfd. capacitor in series with the signal generator output cable to prevent shock and to protect the equipment.

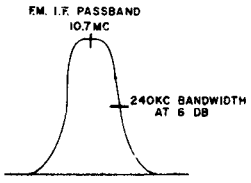

FIG. 1

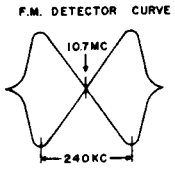

FIG. 2

FM IF ALIGNMENT USING AM SIGNAL GENERATOR AND VTVM

	SIGNAL GENERATOR COUPLING	SIGNAL GEN. FREQ.	RADIO DIAL SETTING	CONNECT VTVM	ADJUST	REMARKS
1.	TO PIN 8 (CATHODE) OF 12DT8 THROUGH A 50 MMF (REMOTE ANT. HANK)	10.7MC (UNMOD.)	POINT OF NON-INTERFERENCE	DC PROBE TO POINT Ⓐ COMMON TO CHASSIS	T3, S2 S1B S1A.	ADJUST FOR MAXIMUM DEFLECTION.
2.	"	"	"	DC PROBE TO POINT Ⓑ COMMON TO POINT Ⓒ	T4	ADJUST FOR ZERO READING. A POSITIVE AND NEGATIVE READING WILL BE OBTAINED ON EITHER SIDE OF THE CORRECT SETTING. PROCEED WITH STEP 5.

FM IF ALIGNMENT USING FM SIGNAL GENERATOR AND OSCILLOSCOPE

FREQUENCY MODULATE THE IF SIGNAL WITH A 60 CYCLE SINE WAVE TO A TOTAL DEVIATION OF 450 KC. ADJUST THE OSCILLOSCOPE INTERNAL HORIZONTAL DEFLECTION VOLTAGE TO 120 CYCLES, AND SYNCRONIZE IT WITH THE 60 CYCLE SINE WAVE.

	SIGNAL GENERATOR COUPLING	SIGNAL GEN. FREQ.	RADIO DIAL SETTING	CONNECT SCOPE	ADJUST	REMARKS
3.	TO PIN 8 (CATHODE) OF 12DT8 THROUGH A 50 MMF (REMOTE ANT. HANK)	10.7MC (450 KC TOTAL DEV.)	POINT OF NON-INTERFERENCE	VERT AMP TO POINT Ⓐ LOW SIDE TO CHASSIS	T3, S2 S1B, S1A.	DISCONNECT STABILIZING CAPACITOR 2MFD. ADJUST FOR CURVE OF MAXIMUM AMPLITUDE AND SYMMETRY SIMILAR TO FIG. 1.
4.	"	"	"	VERT. AMP TO POINT Ⓑ LOW SIDE TO POINT Ⓒ	T4	RECONNECT STABILIZING CAPACITOR 2MFD. ADJUST SO THAT 10.7MC OCCURS AT CENTER OF CROSSOVER LINES SIMILAR TO FIG. 2. SLIGHTLY RETOUCH T3 FOR MAX. AMPLITUDE AND STRAIGHTNESS OF CROSSOVER LINES, PROCEED WITH STEP 5.

FM RF ALIGNMENT

	SIGNAL GENERATOR COUPLING	SIGNAL GEN. FREQ.	RADIO DIAL SETTING	CONNECT VTVM	ADJUST	REMARKS
5.	TO PIN 8 (CATHODE) OF 12DT8 THROUGH A 50 MMF (REMOTE ANT. HANK)	108MC	108MC (SLUGS OUT)	DC PROBE TO POINT Ⓐ COMMON TO CHASSIS	T1, T2	ADJUST FOR MAXIMUM DEFLECTION.
6.	"	88MC	88MC (SLUGS IN)	"	PADDER FLAPS	MOVE PADDER FLAPS CLOSER OR FURTHER FROM OSC. & RF COILS FOR MAX. DEFLECTION. REPEAT STEPS 5. & 6. FOR HIGHEST READING.

EMERSON RADIO Model G-1707, Continued from preceding page, at left.

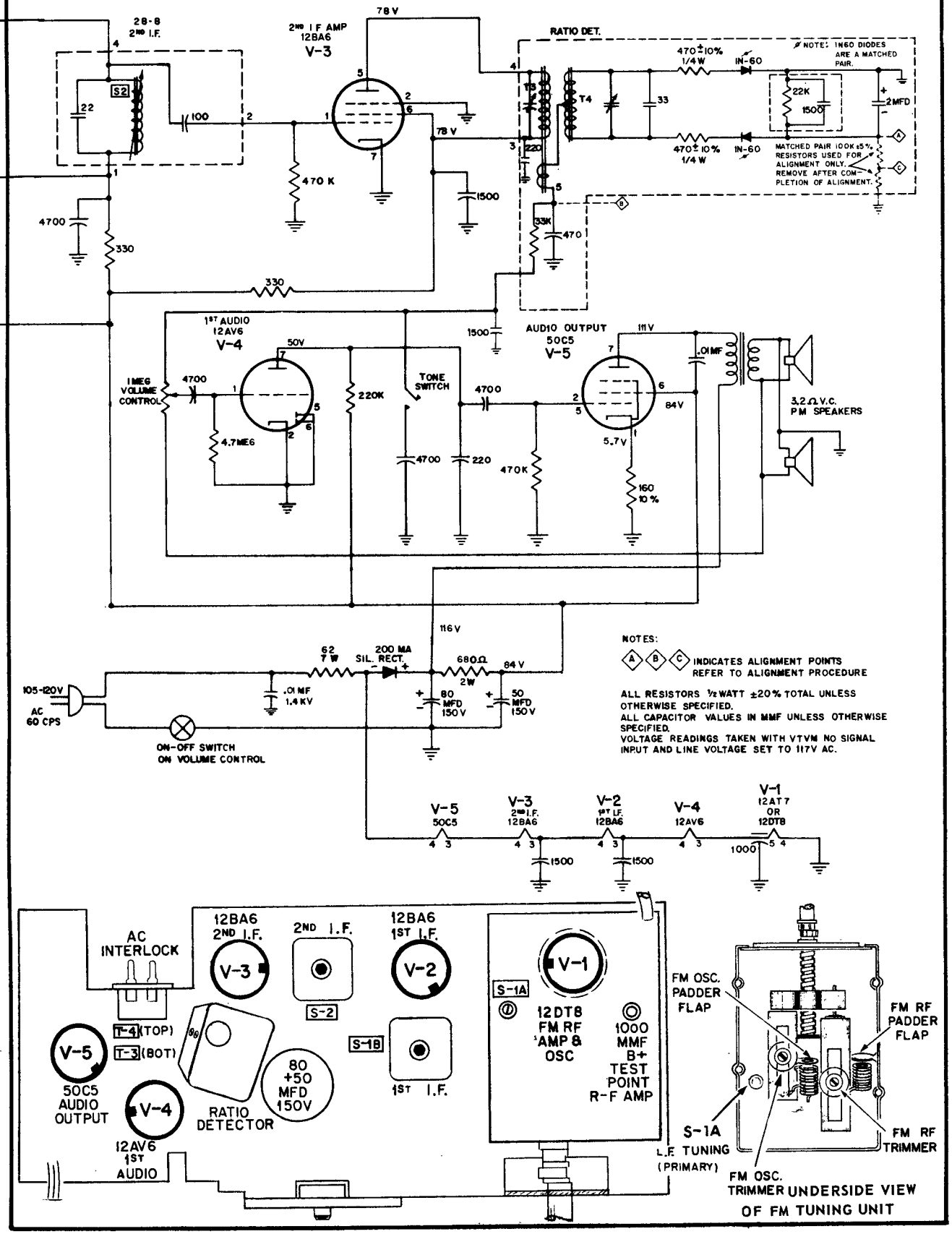

TUBE LOCATION AND ALIGNMENT POINTS

EMERSON RADIO Model G-1708, Continued on the next page at right.

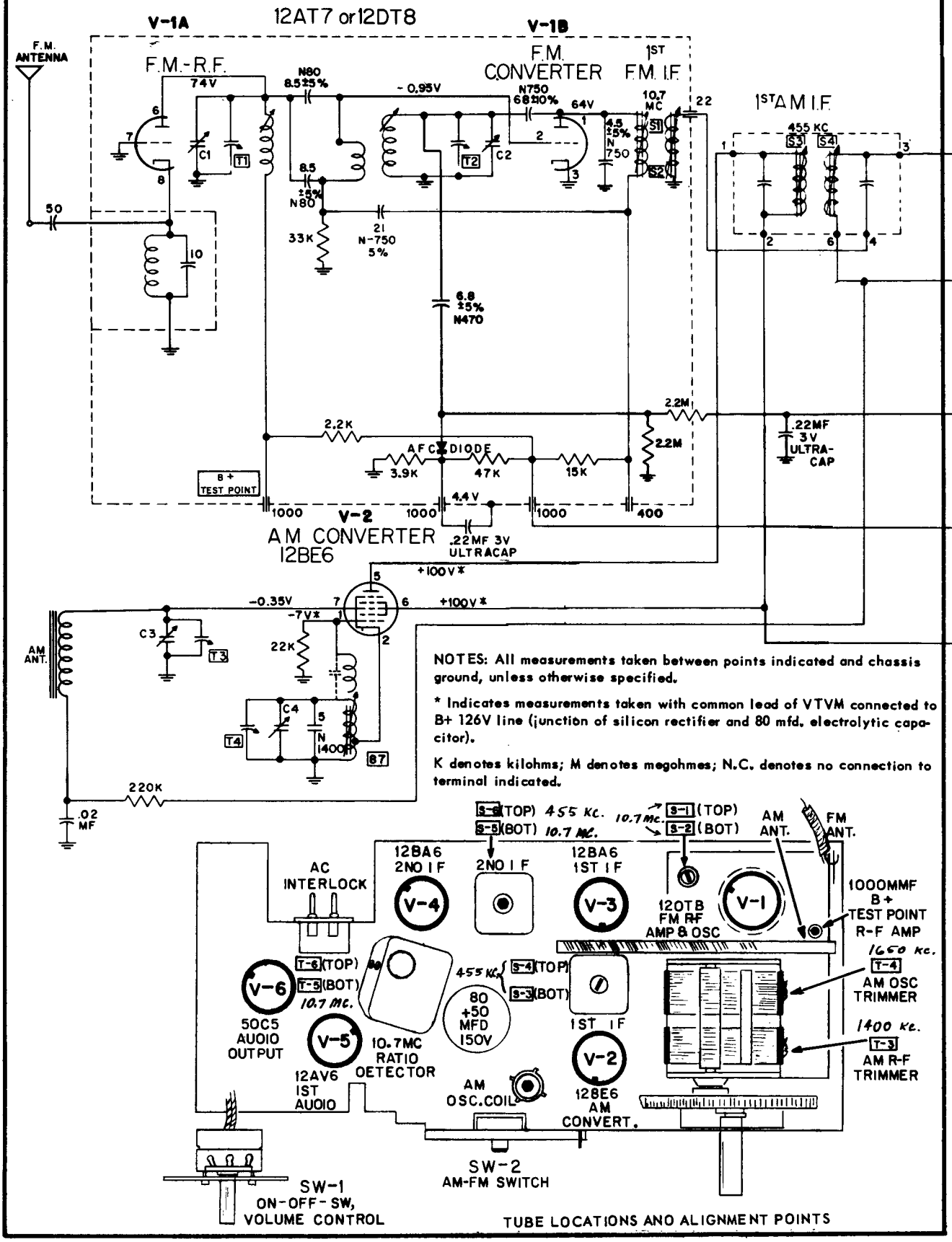

TUBE LOCATIONS AND ALIGNMENT POINTS

EMERSON RADIO Model G-1708, Continued from the preceding page at left.

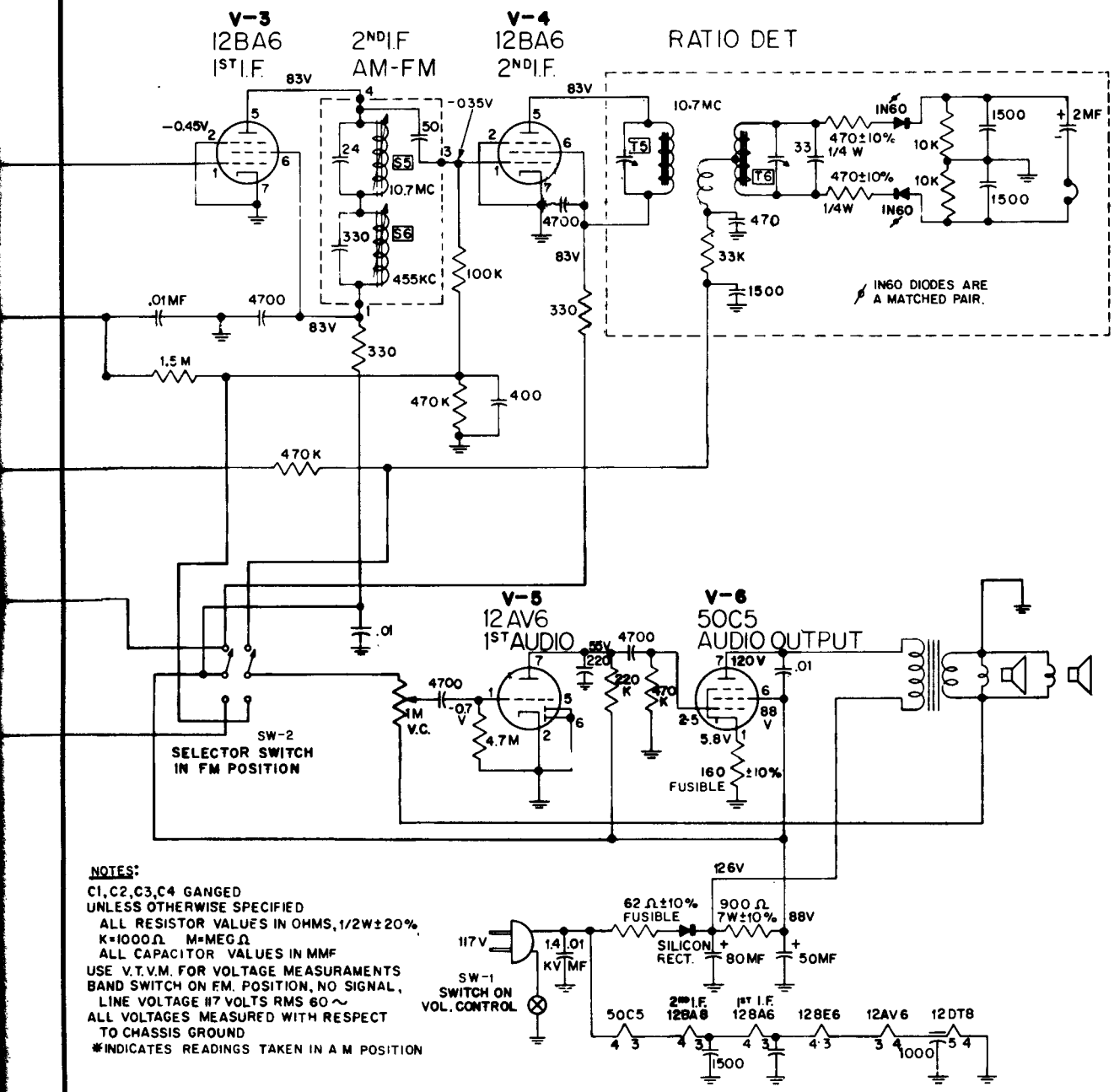

RESISTANCE READINGS CHART, MODEL G-1708

Symbol No.	Tube Type	SW-2 Position	PIN 1	PIN 2	PIN 3	PIN 4	PIN 5	PIN 6	PIN 7	PIN 8	PIN 9
V-1	12DT8	FM	*16K	33K	0	0	10	*3.1K	0	0	N. C.
V-2	12BE6	AM	22K	0.4	20	32	*910	*900	1	–	–
V-3	12BA6	AM or FM	1.6M	0	32	44	*1.2K	*1.2K	0	–	–
V-4	12BA6	FM	470K	0	44	56	*1.2K	*1.2K	0	–	–
V-5	12AV6	AM or FM	4.7M	0	20	10	0	0	*220K	–	–
V-6	50C5	AM or FM	160	470K	56	100	470K	*900	*150	–	–

EMERSON Model P-1913, Tuner Chassis 120640

(See next page, adjacent at right, for data on amplifier unit used.)

Emerson Model P-1913 is a combined radio and phonograph combination designed for playing of both stereophonically and monophonically recorded discs, as well as reception of standard AM radio programs and FM programs broadcast either monophonically or in the stereo mode. It is equipped with a high-fidelity, dual-channel 20 watt stereo amplifier and a separate FM/AM tuning chassis with built-in stereo multiplex circuits and FM stereo indicator lamp. The separate phono pre-amplifier chassis used in this model, in conjunction with the four-speed stereo record changer employed, provides high-quality reproduction of all types of records, including the older 78 RPM variety. Model P-1913 is equipped with a total of six self-contained loudspeakers, one wide-range speaker and two high-frequency tweeters for each of the stereo channels.

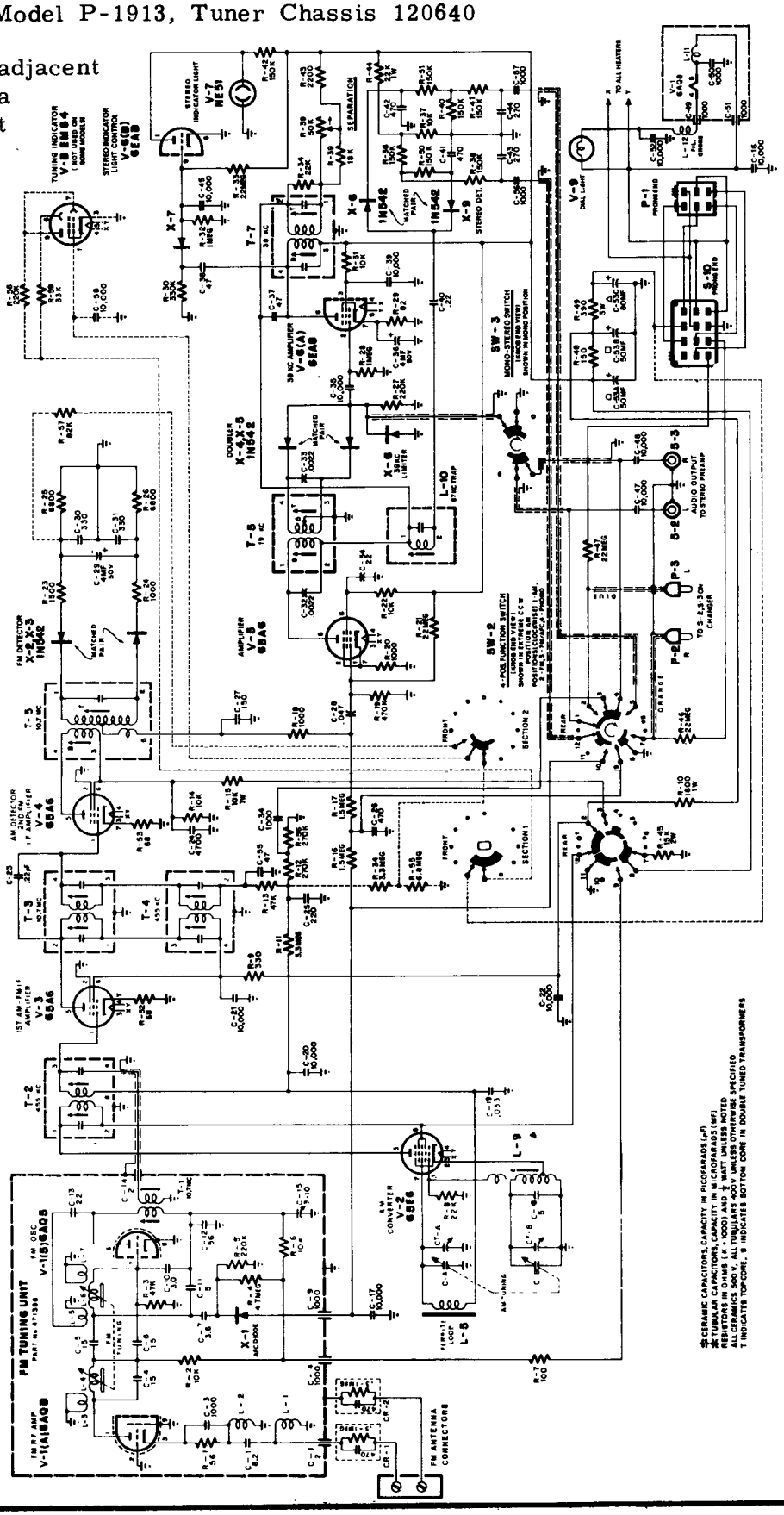

EMERSON Model P-1913, Amplifier Chassis 120639 and 120647
(Continued from preceding page)

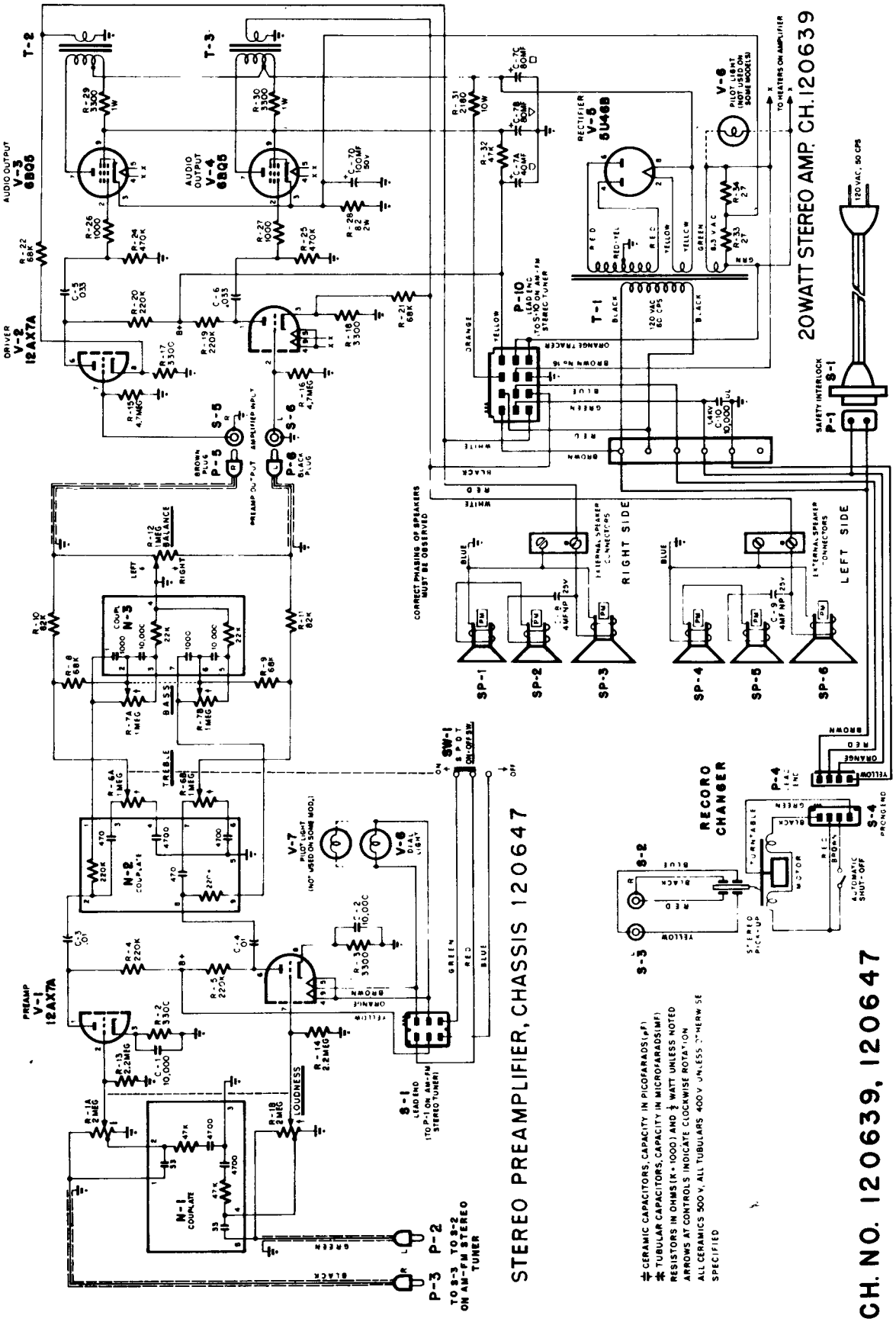

EMERSON Model P-1914
Chassis 120649
(Continued on next page)

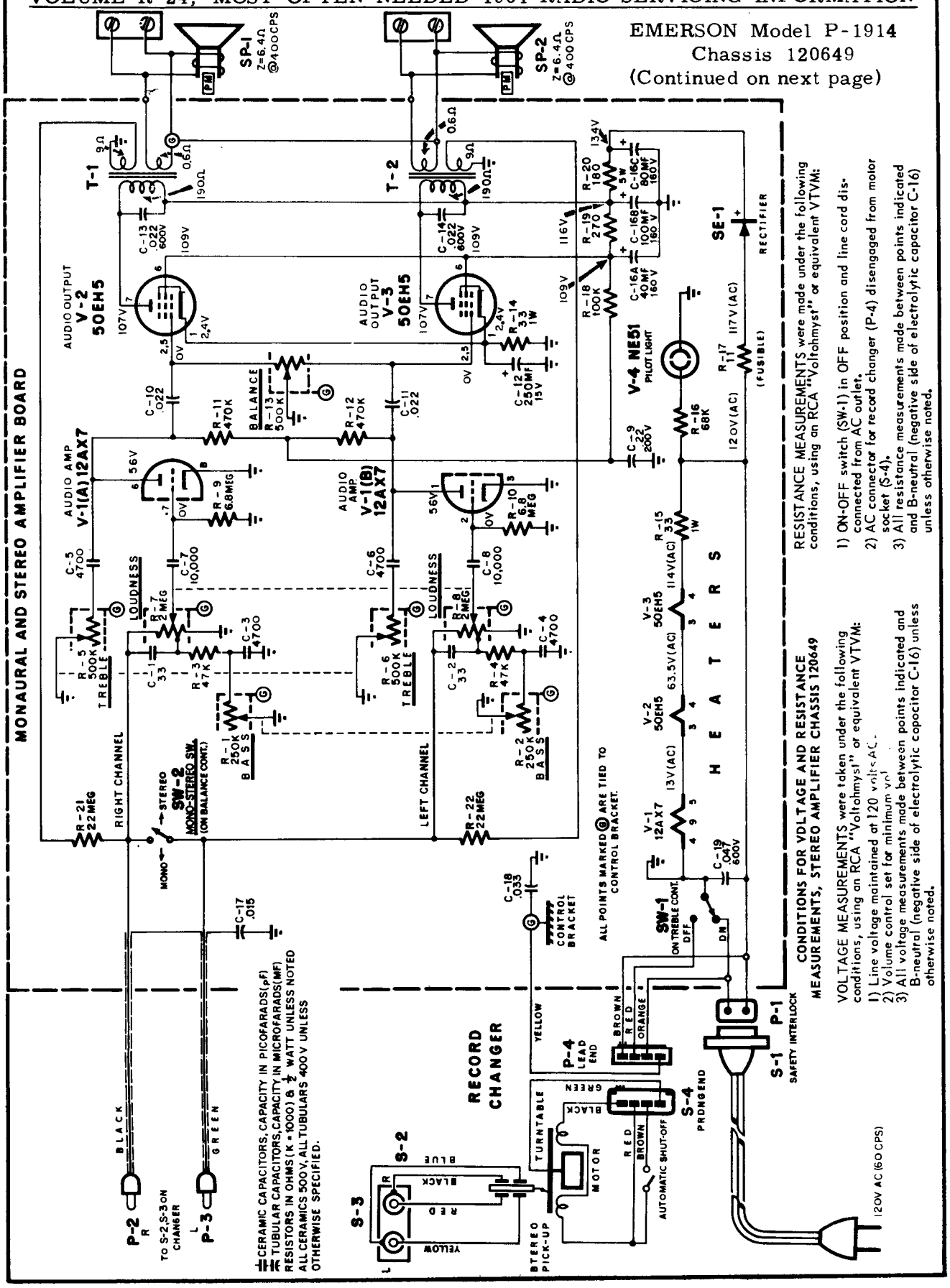

EMERSON Model P-1914, Chassis 120649, Continued from preceding page

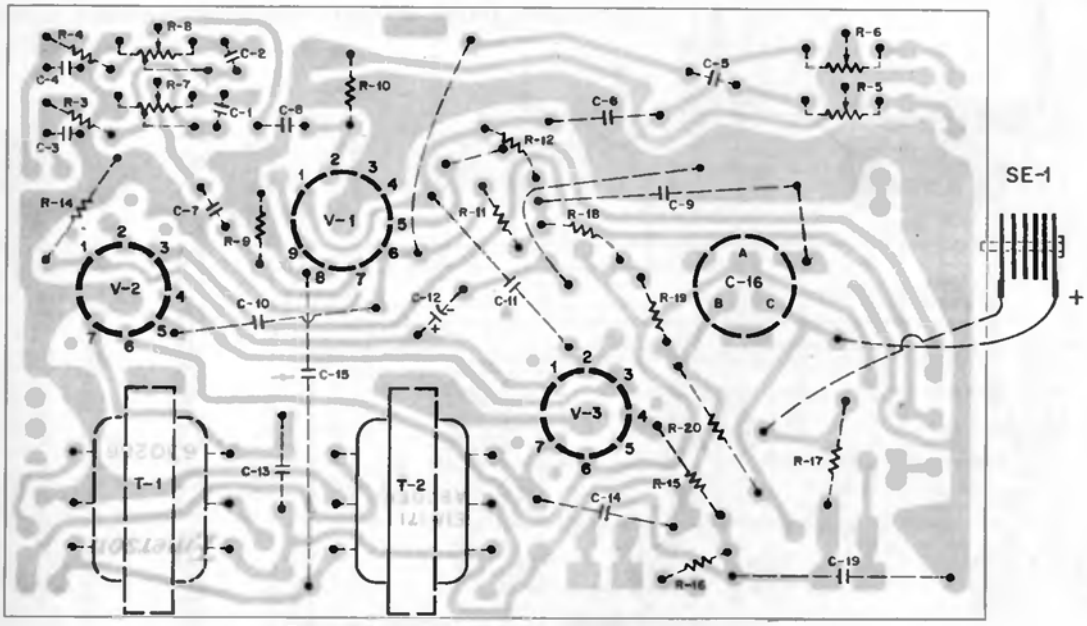

ETCHED PRINTED CIRCUIT CHASSIS (Bottom View)

RESISTANCE READINGS, STEREO AMPLIFIER CHASSIS 120649

SYM.	TUBE TYPE	PIN 1	PIN 2	PIN 3	PIN 4	PIN 5	PIN 6	PIN 7	PIN 8	PIN 9
V-1	12AX7	*570K	6.8 M	0	0	18	*570K	6.8 M	0	9
V-2	50EH5	33	30 to .5 M	18	64	30 to .5 M	*450	*370	–	–
V-3	50EH5	33	30 to .5 M	64	112	30 to .5 M	*450	*370	–	–

* MEASURED WITH COMMON LEAD OF METER CONNECTED TO POSITIVE SIDE OF SELENIUM RECTIFIER SE-1.

EMERSON Model P-1926, Chassis 120693

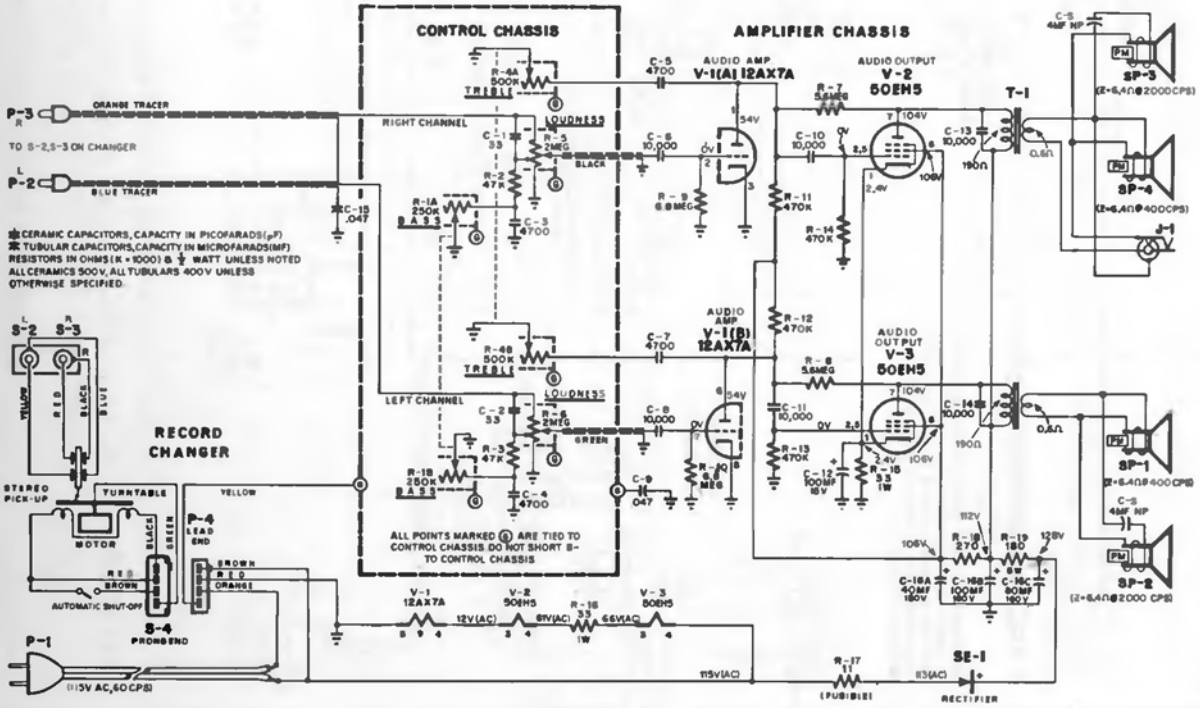

EMERSON Models P-1936, P-1937, using Amplifier Chassis 120637

(See next page at right for diagram of tuner)

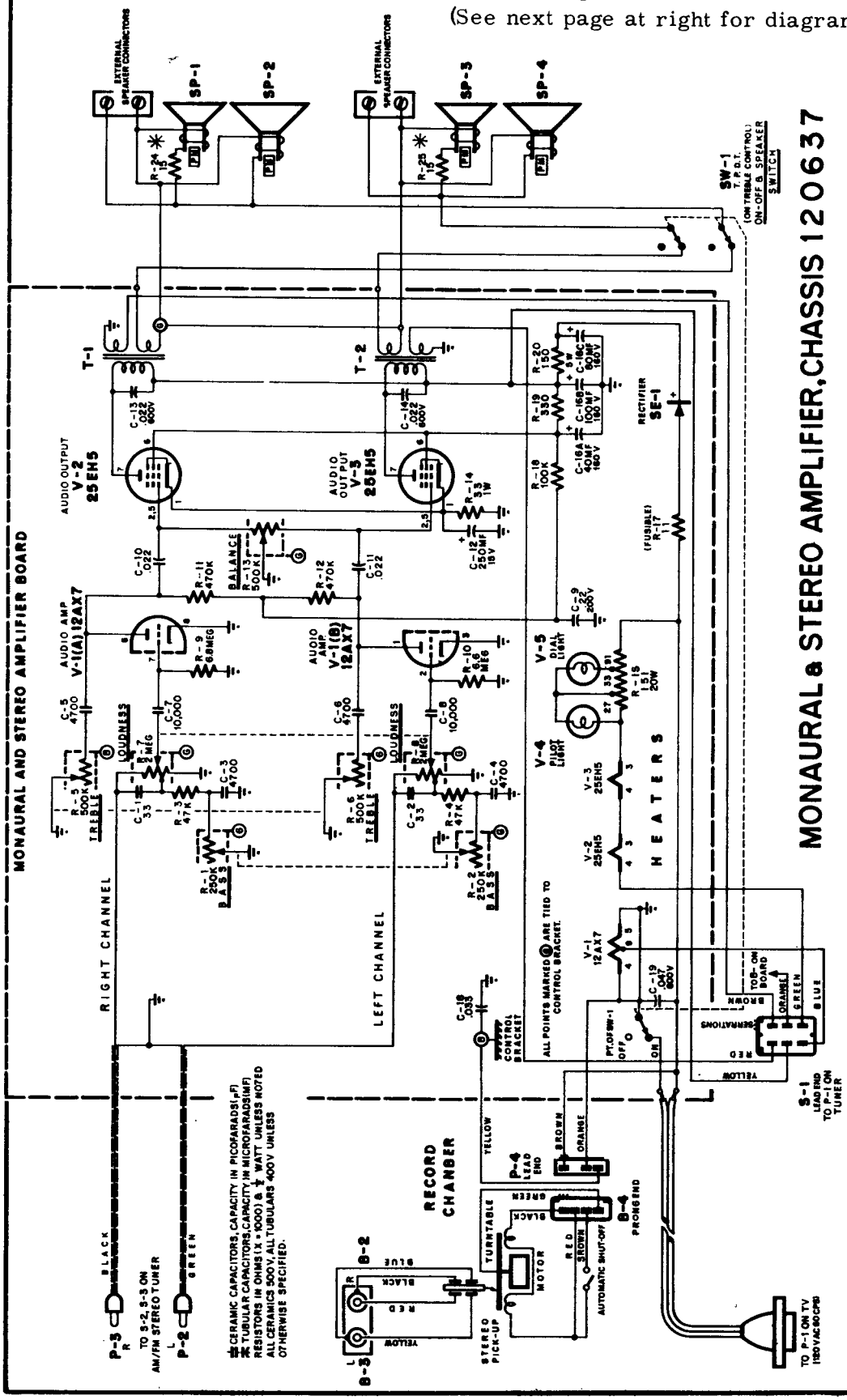

NOTE 1 - Proper phasing of loudspeakers must be observed when making replacements.

(*) NOTE 2 - R-24 and R-25 used in Model P-1936 only. Model P-1937 utilizes two 4 mfd. non-polarized capacitors (Pt. #925391) in place of these resistors to provide high-frequency cross-over.

EMERSON Models P-1936, P-1937, using Amplifier Chassis 120637

(See next page at right for diagram of tuner used)

EMERSON Tuner Chassis 120638
used in Models P-1915,
P-1936, and P-1937.

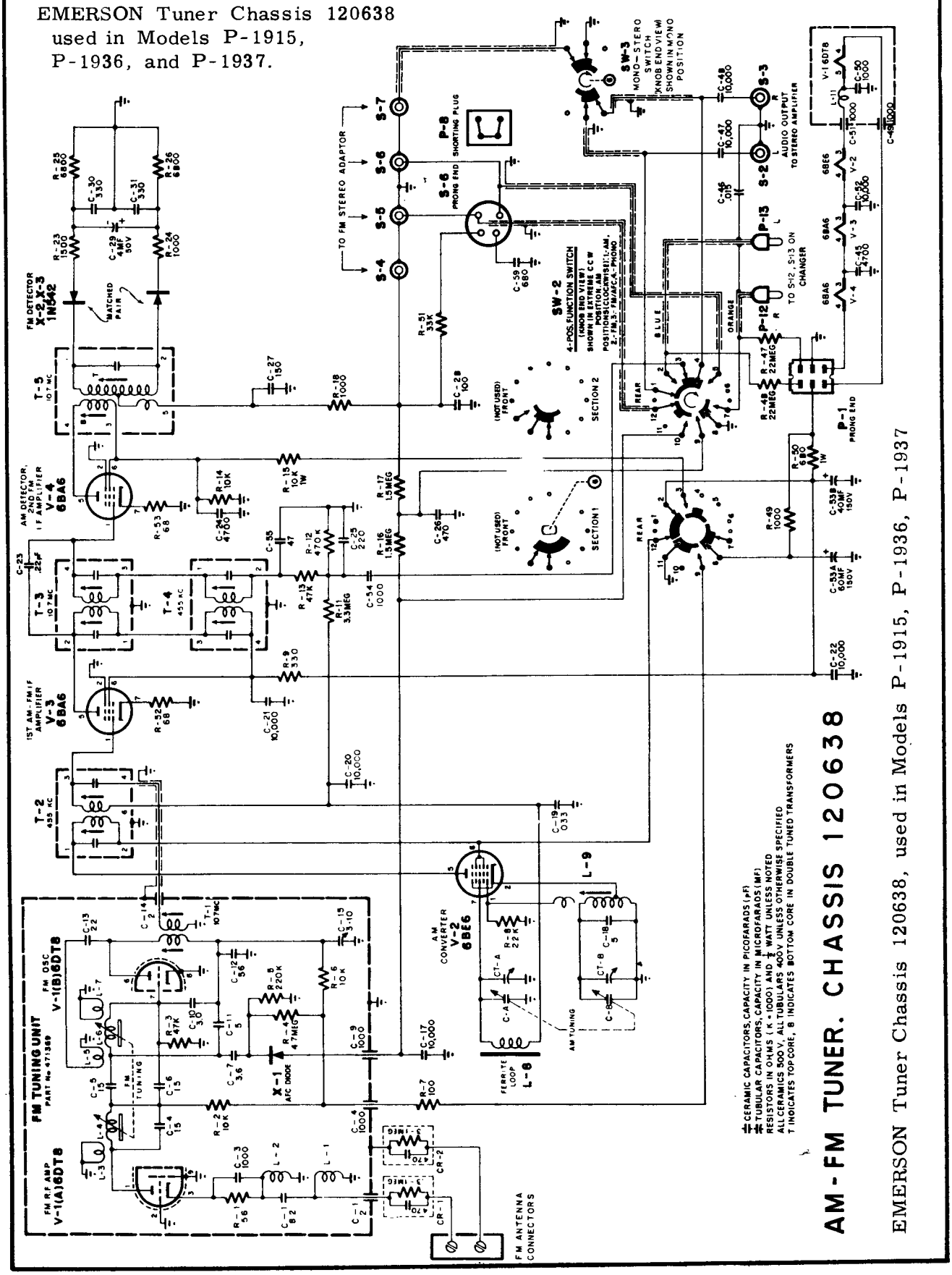

EMERSON Tuner Chassis 120638, used in Models P-1915, P-1936, P-1937

EMERSON Amplifier Chassis 120646 used in Model P-1915

(For Tuner Chassis 120638 used in this model, see preceding page.)

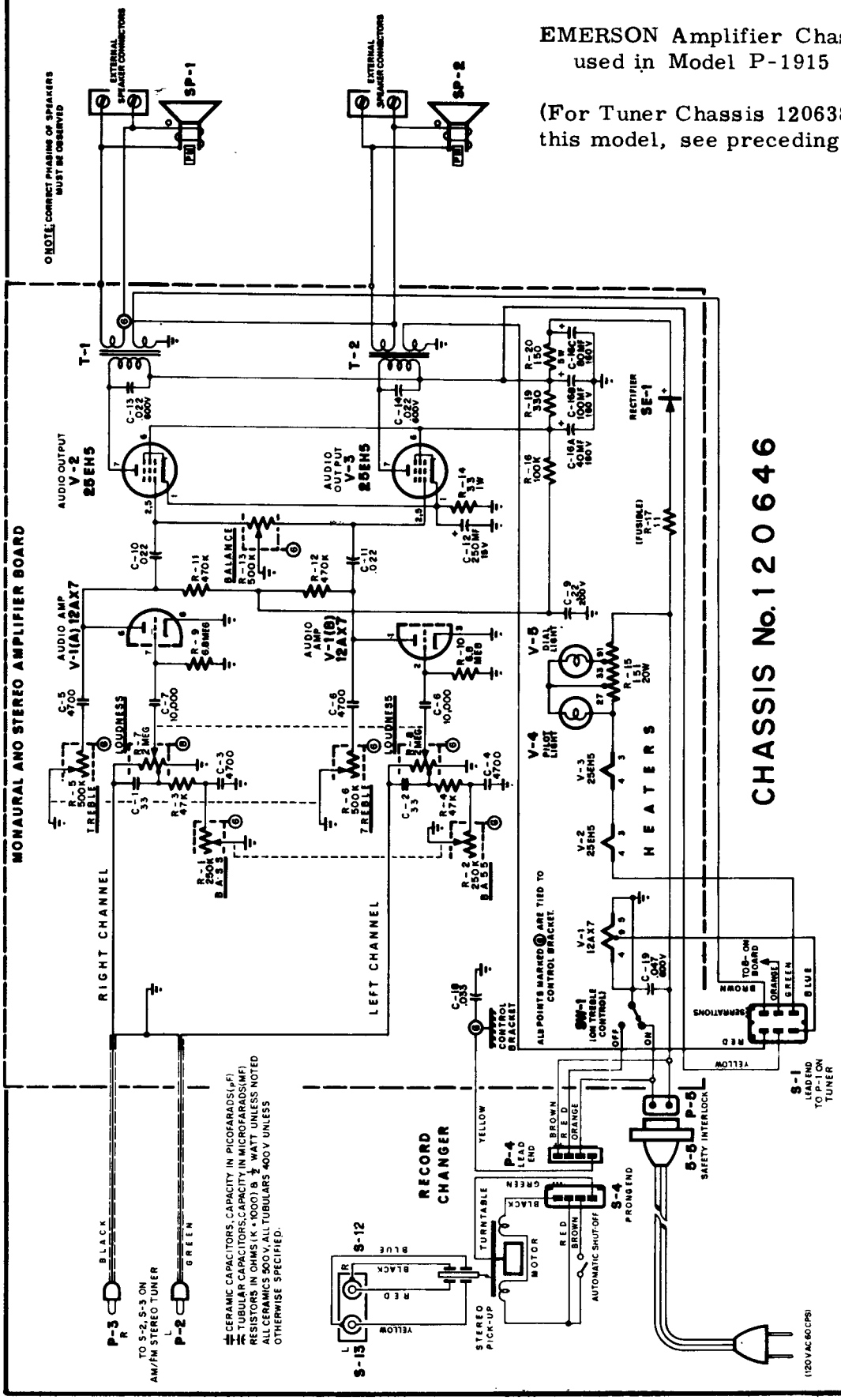

Emerson Model P-1915 is a combination FM-AM radio and stereophonic phonograph equipped with a four-speed automatic intermix record changer, complete with an automatic 45 RPM spindle adaptor. Two chassis are utilized; one for audio amplification and the other for reception of both AM and FM programs transmitted in the standard broadcast bands. Model P-1915 incorporates the Emerson "Power-Monitor" feature which, if desired, may be set to turn off both the stereo amplifier and the record changer after the last record has been played, thereby turning the unit completely off.

EMERSON Models G-1710,,G-1711, Chassis 120686, 120701

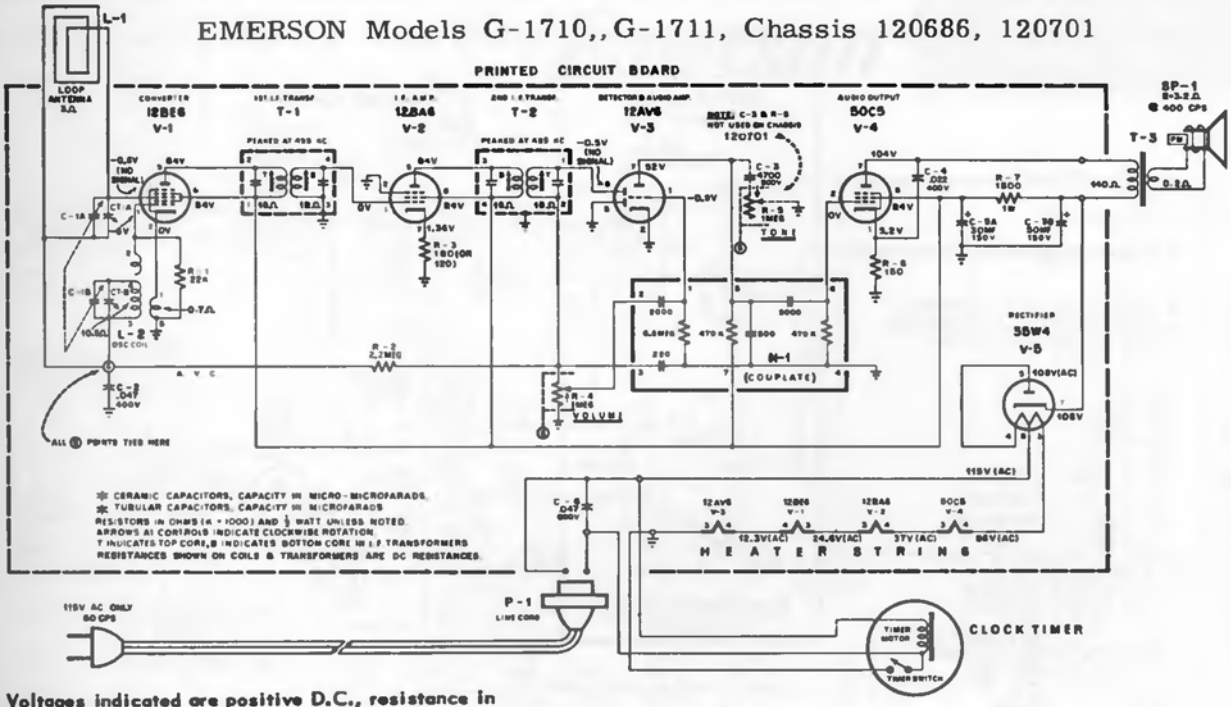

Voltages indicated are positive D.C., resistance in ohms unless otherwise indicated.
Measurements taken with Voltohmyst or equivalent VTVM.
All measurement taken between points indicated and B minus (low side of volume control).

Voltage readings indicated on schematic were taken with:
(A) Line voltage set at 115 volts AC,
(B) Volume control set for minimum volume,
(C) Tuning capacitor fully closed.

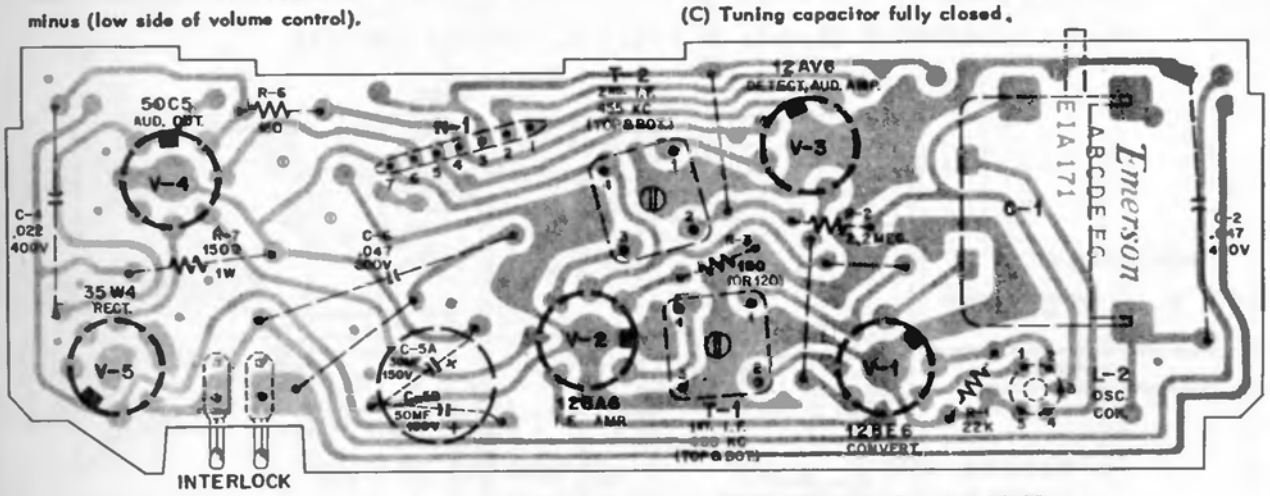

ETCHED PRINTED CIRCUIT CHASSIS (BOTTOM VIEW)

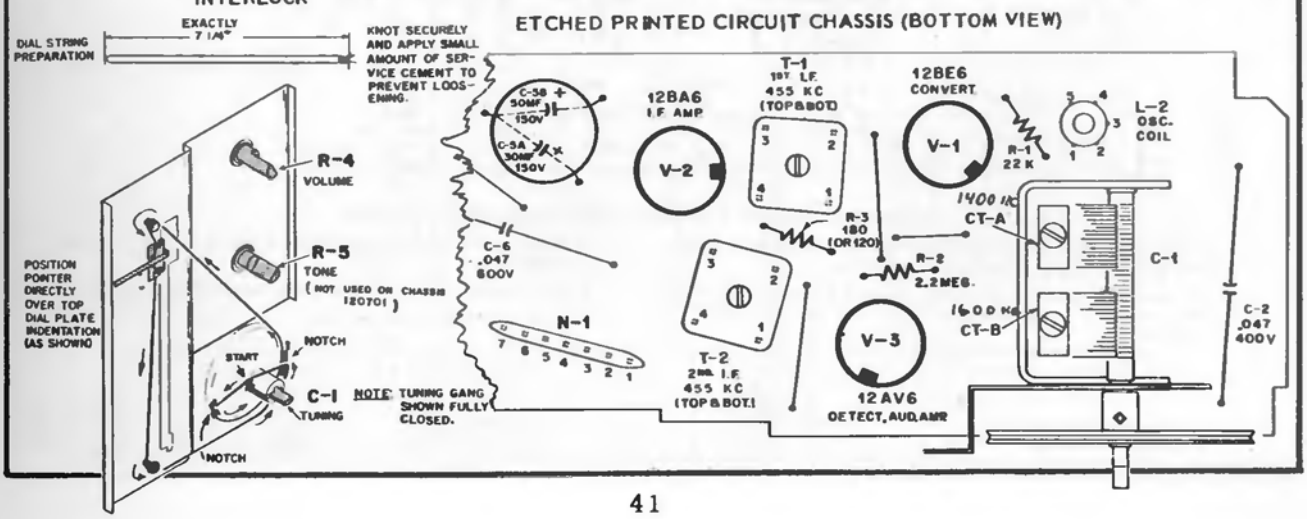

EMERSON Models P-1919, P-1920, Chassis 120668; Model P-1920A, Chassis 120693

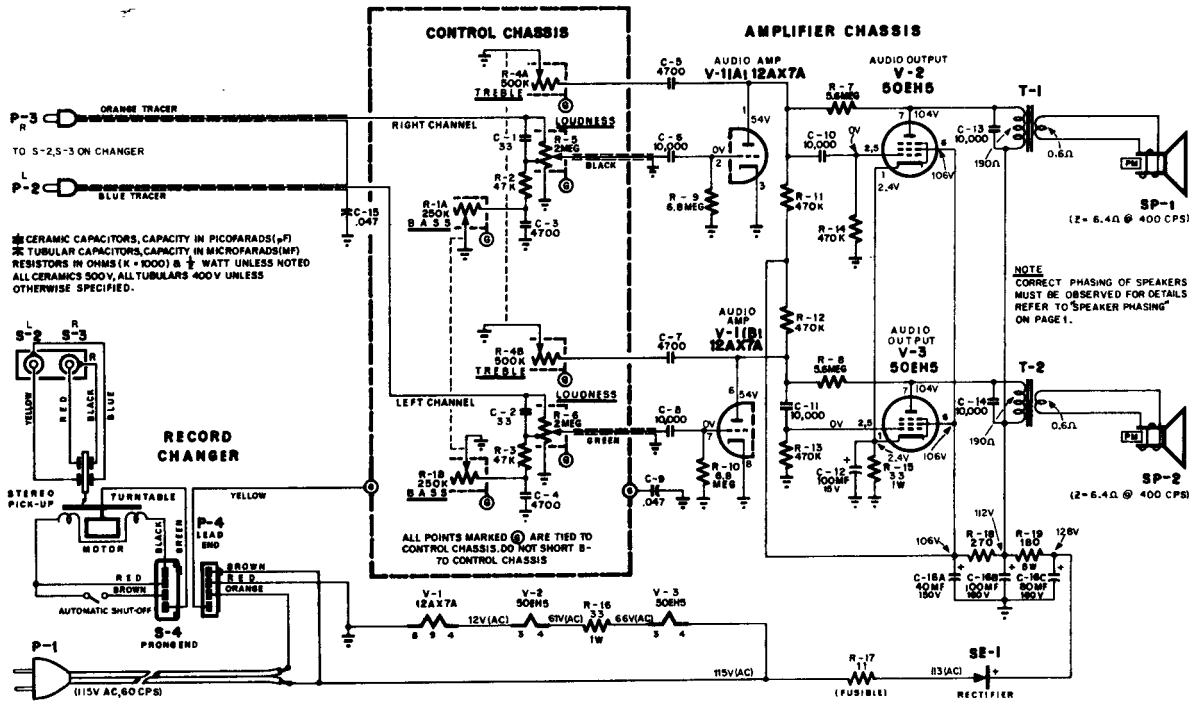

EMERSON Models P-1921, -A, Chassis 120567B

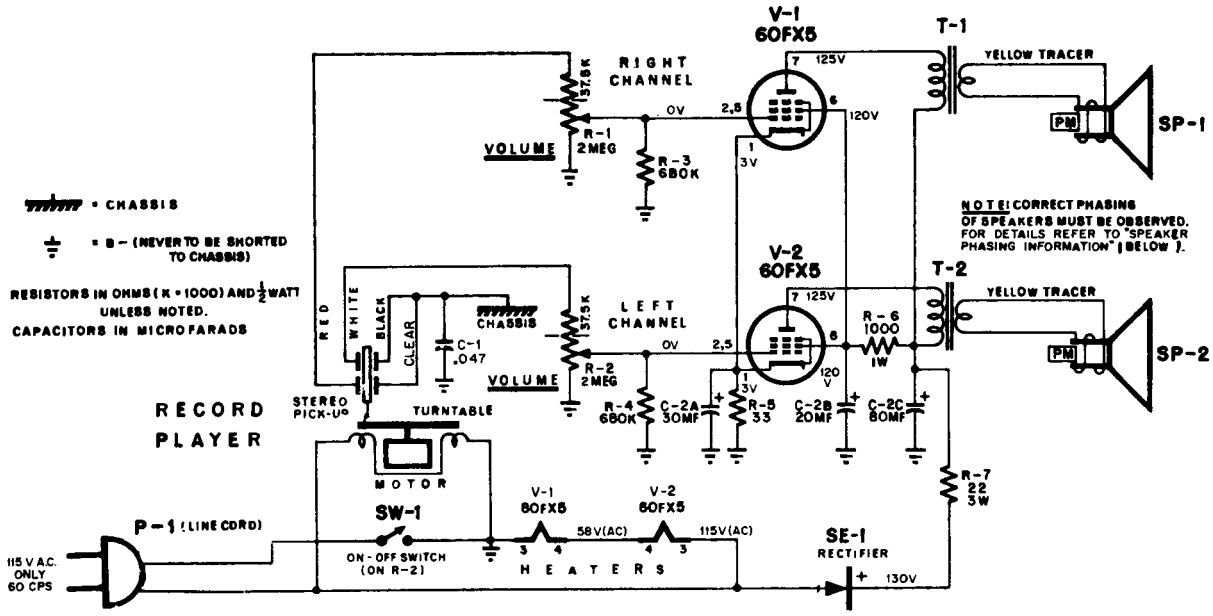

CONDITIONS FOR VOLTAGE AND RESISTANCE MEASUREMENTS

1. All voltages measured with VTVM, negative lead to B- (common lead of C-2), volume control set at minimum.
2. All resistance readings taken with AC cord disconnected, negative lead to B- (common lead of C-2), motor switch in "OFF" position.
3. (*) Indicates varying resistance – allow 30 seconds for meter to settle.
4. (**) Reading given varies with setting of volume control.
5. (N.C.) Denotes no connection.

SYMBOL	TUBE TYPE	PIN 1	PIN 2	PIN 3	PIN 4	PIN 5	PIN 6	PIN 7
V-1	60 FX5	33	10Ω to 510k **	0	85	10Ω to 510k **	*1 MEG	*1 MEG
V-2	60 FX5	33	10Ω to 510k **	170	85	10Ω to 510k **	*1 MEG	*1 MEG

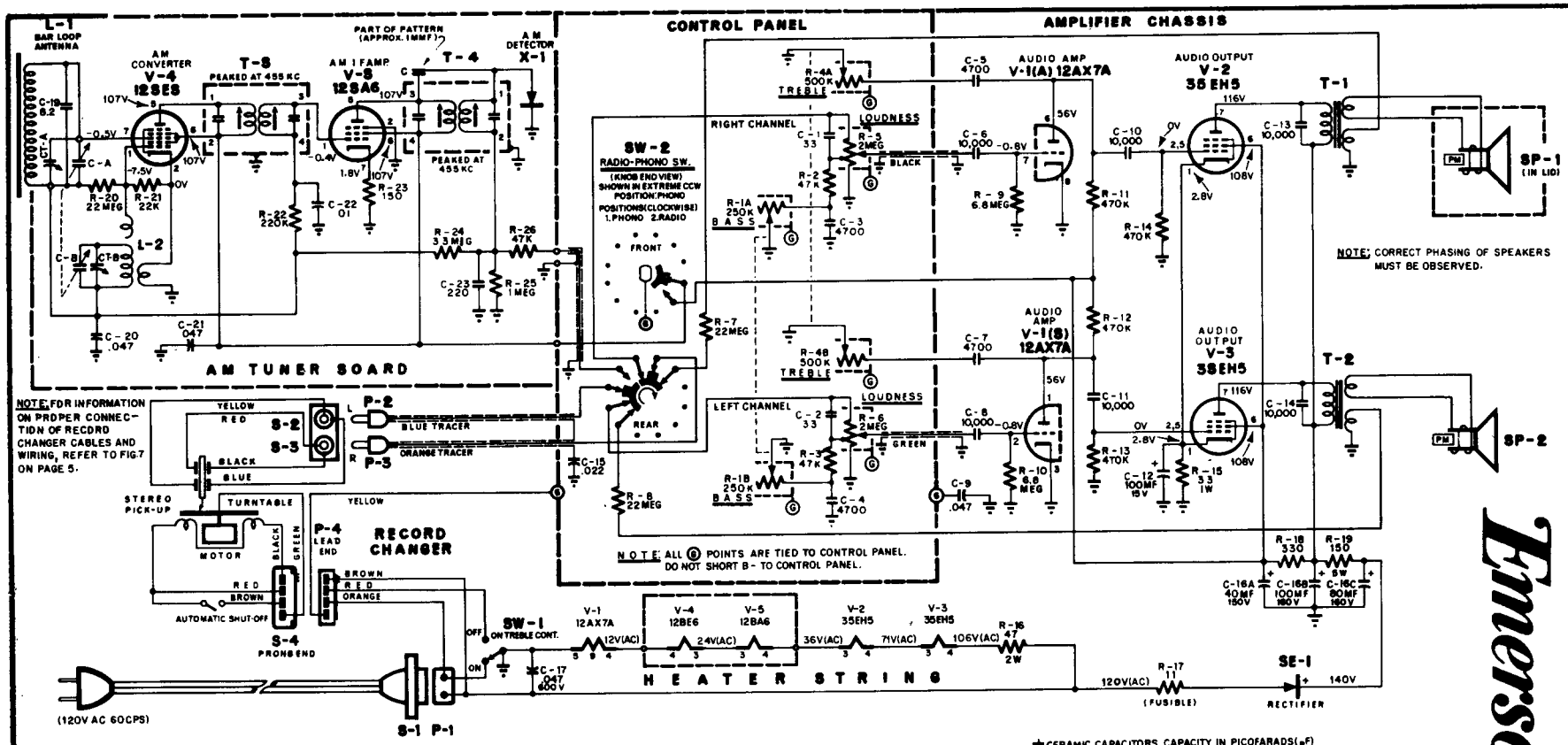

ALIGNMENT PROCEDURE

Step	SIGNAL GENERATOR Frequency	SIGNAL GENERATOR Connection	TUNING CAPACITORS	V. T. V. M. Range	V. T. V. M. Connection	ADJUST
1.	455 KC	High side to pin 7 of 12BE6 through a 1,000 mmf. capacitor, low side to B–minus (negative terminal of electrolytic capacitor C-16.	Fully closed (low end of band).	–25 Volts D.C.	High side to AGC line (frame of tuning capacitor), common leads to B–minus.	T-4 Top T-4 Bottom T-3 Top T-3 Bottom Adjust for maximum output in order given.
2.	1640 KC	Form loop of several turns of wire and radiate signal into receiver.	Fully open (high end of band).	As above	As Above.	CT-B (Osc. Trimmer)
3.	1400 KC	As above.	Tune for strongest 1400 KC signal.	As above.	As Above.	CT-A (R-F. Trimmer)

CONDITIONS FOR VOLTAGE MEASUREMENTS.

Voltage measurements taken with:

a) Line voltage maintained at 120 volts a.c.
b) Loudness control set for minimum volume.
c) Variable condenser fully closed and no signal applied.
d) Record changer in OFF position.
e) Selector switch in radio position.

All measurements taken between points shown and B–minus (unless otherwise indicated), using an RCA Voltohmyst or equivalent VTVM.

Normal component tolerances may casue variations of ±10% in readings obtained, which should be considered as being within limits.

Emerson

MODEL: P–1923
CHASSIS: 120670

Gamble-Skogmo, Inc.

Coronado Model RA60-9921A

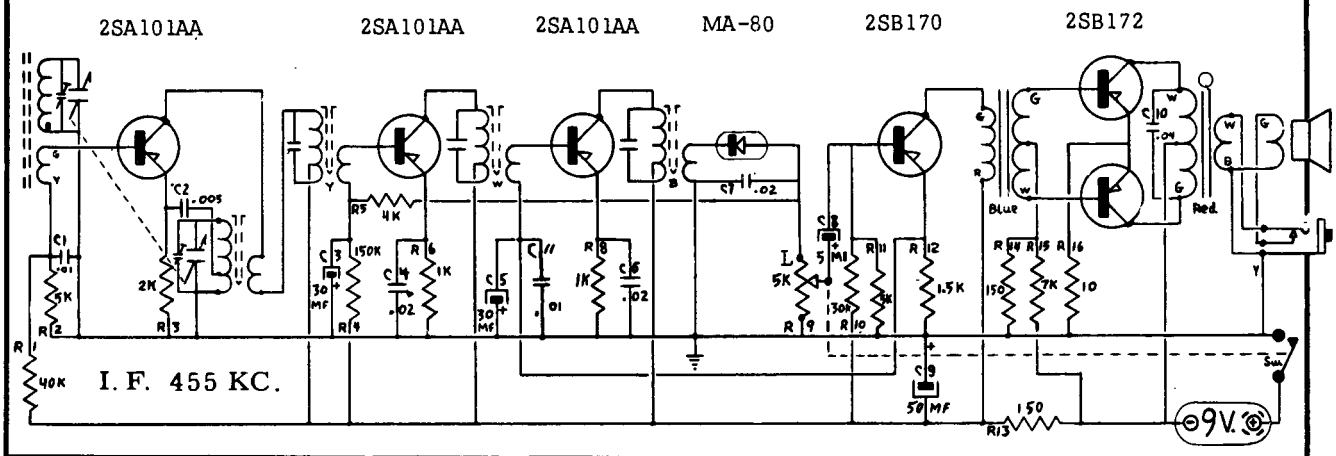

Gamble-Skogmo Coronado Model RA60-9922A

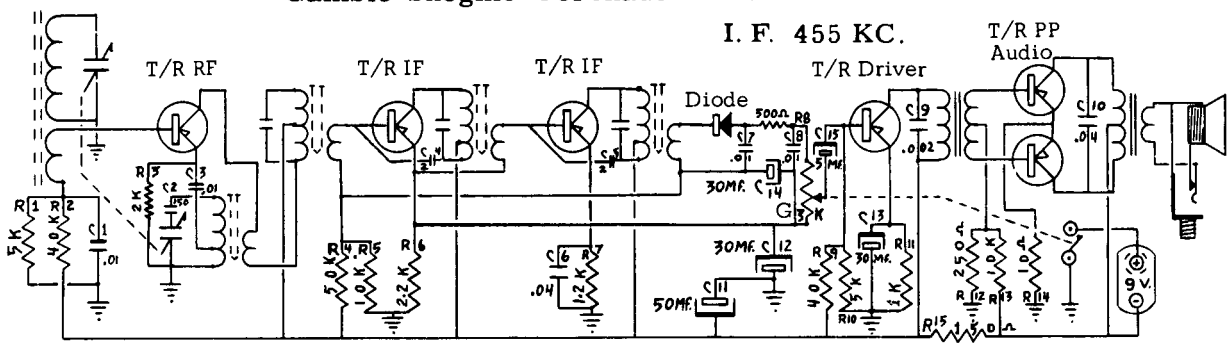

Gamble-Skogmo Coronado Model RA60-9924A

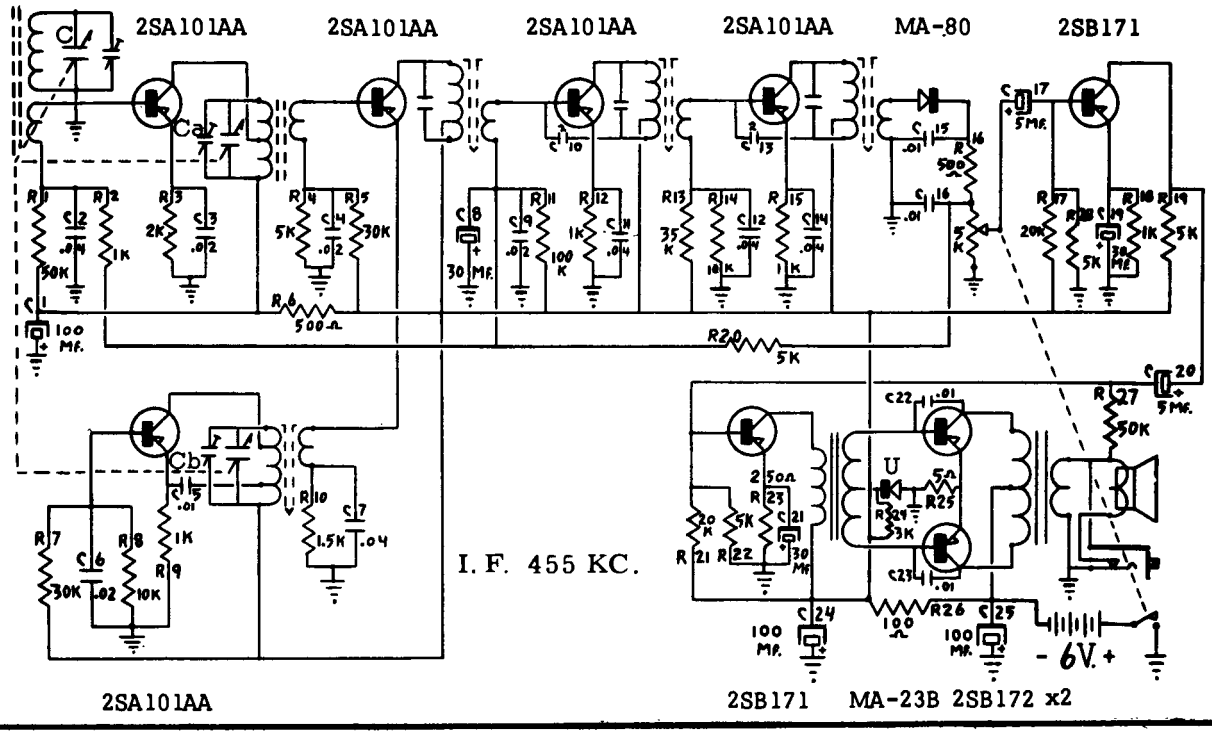

GENERAL ELECTRIC

MODELS H220A H221A

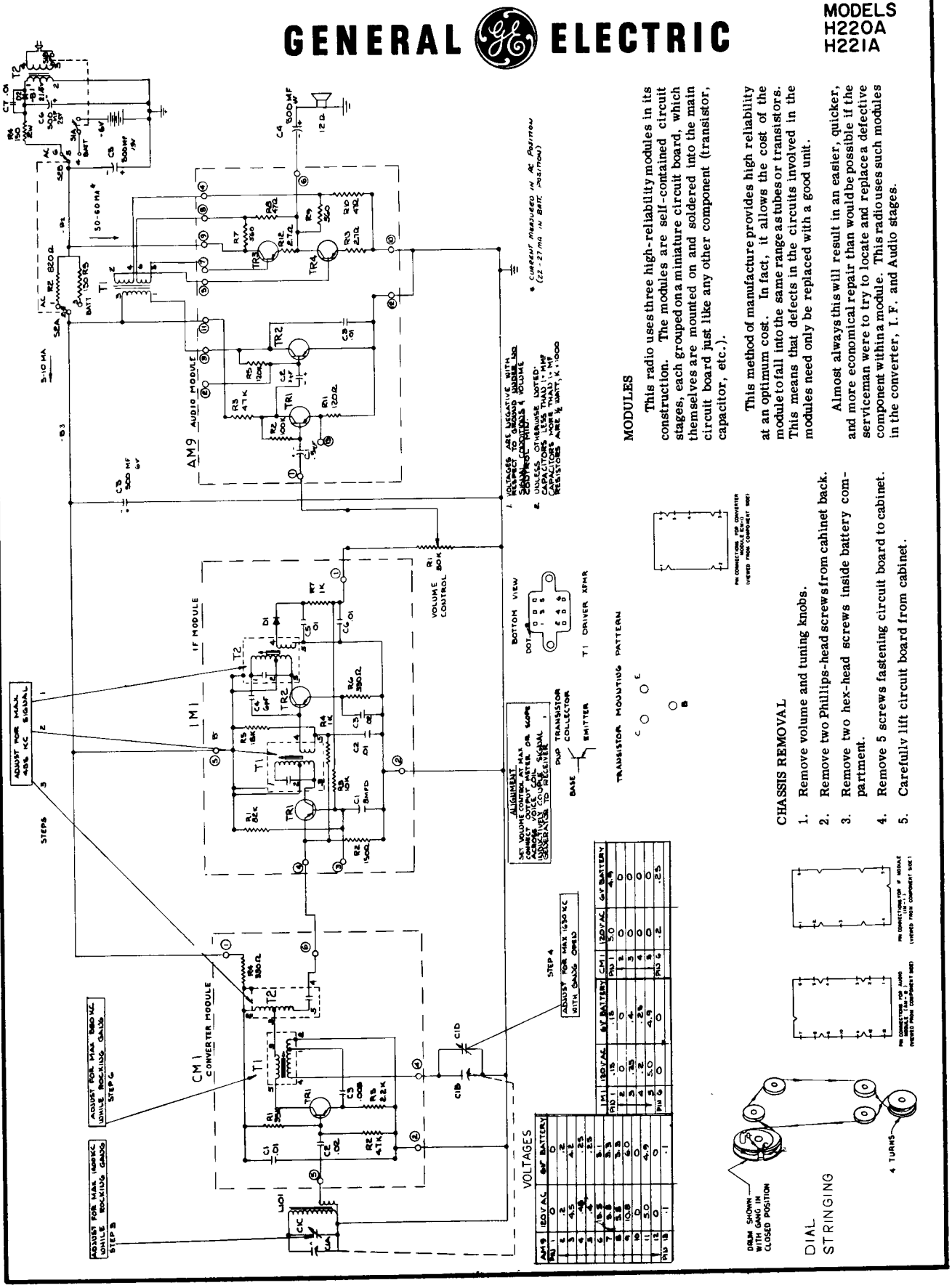

MODULES

This radio uses three high-reliability modules in its construction. The modules are self-contained circuit stages, each grouped on a miniature circuit board, which themselves are mounted on and soldered into the main circuit board just like any other component (transistor, capacitor, etc.).

This method of manufacture provides high reliability at an optimum cost. In fact, it allows the cost of the module to fall into the same range as tubes or transistors. This means that defects in the circuits involved in the modules need only be replaced with a good unit.

Almost always this will result in an easier, quicker, and more economical repair than would be possible if the serviceman were to try to locate and replace a defective component within a module. This radio uses such modules in the converter, I. F. and Audio stages.

CHASSIS REMOVAL

1. Remove volume and tuning knobs.
2. Remove two Phillips-head screws from cabinet back.
3. Remove two hex-head screws inside battery compartment.
4. Remove 5 screws fastening circuit board to cabinet.
5. Carefully lift circuit board from cabinet.

GENERAL ELECTRIC

Models P895A-M, P910A-M, P911
P911A-M, P912A-M, P913A-M

(Continued on next page at right)

TABLE I
TABLE OF TRANSISTOR VOLTAGES

	EMITTER	BASE	COLLECTOR
TR1	8	.65	2.5
TR2	.19 TO .29	.34 TO .4	2.6
TR3	.18 TO .3	.35 TO .43	2.6
TR4	0	.2	2.6
TR5	.04	.2	3
TR6	.04	.2	3

ALIGNMENT
SET VOLUME CONTROL AT MAX.
CONNECT VOLT METER OR SCOPE
ACROSS SPKR. COIL.
INDUCTIVELY COUPLE SIGNAL
GENERATOR TO RECEIVER

TRANSISTOR MTG PATTERN
C E
B
BOTTOM VIEWS

SCHEMATIC DIAGRAM—MODELS P910 AND P895 F, G, J, L, M

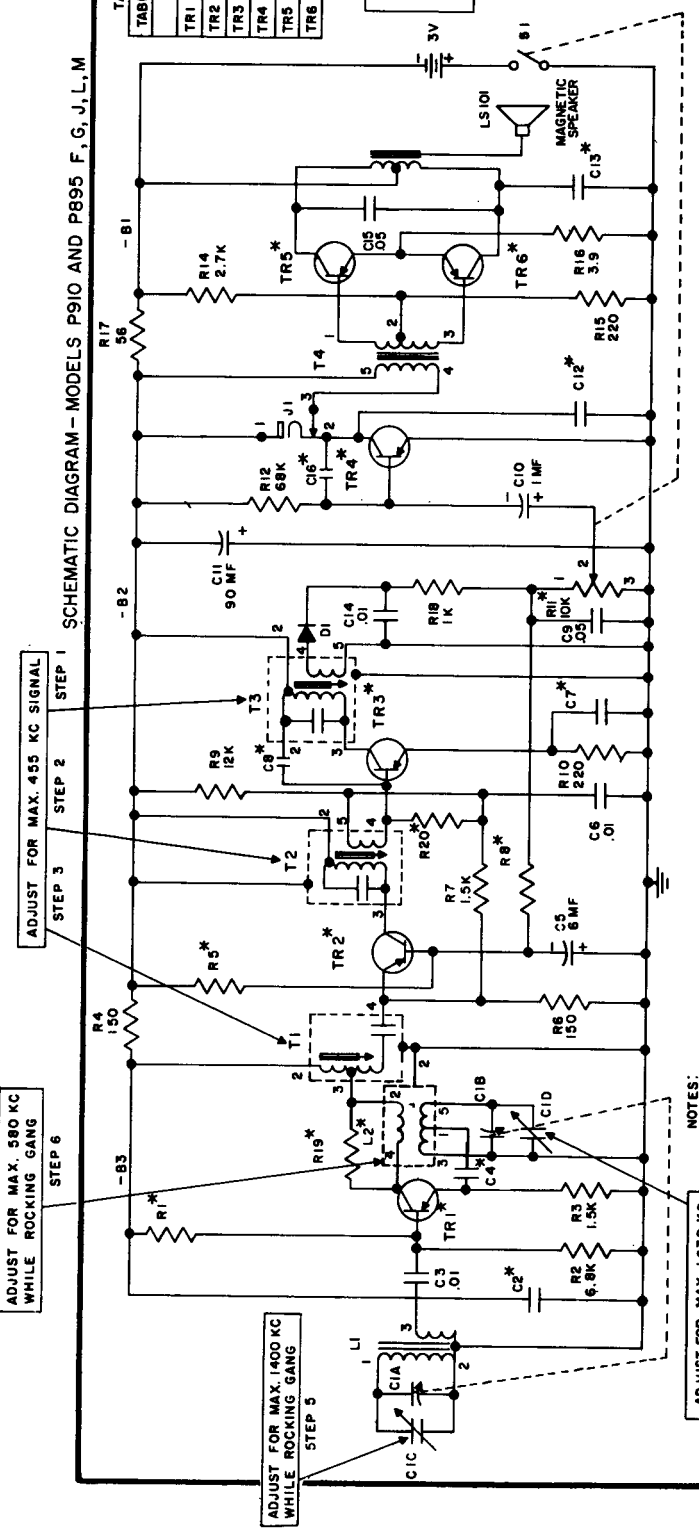

NOTES:

1. UNLESS OTHERWISE NOTED
CAP. MORE THAN 1 = MMF
CAP. LESS THAN 1 = MF
RES. ARE 1/2 WATT K = 1000
2. VOLTAGES ARE NEGATIVE WITH RESPECT TO GRD UNDER NO SIGNAL CONDITIONS & VOL. CONTROL MIN.
3. REPLACE TRANSISTORS WITH TYPES SHOWN IN TABLE 2.
4. * SEE TABLE 2.

SCHEMATIC DIAGRAM—MODELS P910 AND P895 A, B, C, D, E, H, K

GENERAL ELECTRIC

Models P895A-M, P910A-M, P911A-M, P912A-M, P913A-M

(Continued from preceding page at left)

* TABLE 2 - The following components may vary in value or physical characteristics in different set versions of models P910 or P895. The proper component values or part catalog numbers for all component variables are listed under the appropriate columns.

	TRANSISTORS					RESISTORS						CAPACITORS			
Set Version	TR1	TR2	TR3	TR4	TR5 ① & TR6	R1	R19	R5	R20	R8	R11 (VC)	C2	C4	C7	C8
A_1	RS-3857	RS-3862	RS-3863	RS-5504	RS-5704 or RS-5710	12K	8.2K	27K	3.3K	8.2K	RS-4326	.01	.005 or .01	.05	None
A_2	RS-3868	RS-3862	RS-3863	RS-5504	↓	18K	5.6K	27K	3.3K	8.2K	RS-4326	.01 or .005	.005 or .01	.05	None
B_1	RS-3868	RS-3862	RS-3863	RS-5504	↓	18K	5.6K	27K	3.3K	8.2K	RS-4707	↓	↓	.05	None
B_2	RS-3857	RS-3862	RS-3863	RS-5504	↓	12K	8.2K	27K	3.3K	8.2K	RS-4707	.01	↓	.05	None
C_1	RS-3857	RS-3862	RS-3863	RS-5504	↓	18K	5.6K	27K	3.3K	8.2K	RS-4326	.01 or .005	↓	.05	None
C_2	RS-3868	RS-3862	RS-3863	RS-5504	↓	18K	5.6K	27K	3.3K	8.2K	RS-4326	↓	↓	.05	None
D_1	RS-3868	RS-3862	RS-3863	RS-5504	↓	18K	5.6K	27K	3.3K	8.2K	RS-4326	↓	↓	.05	None
D_2	RS-3857	RS-3862	RS-3863	RS-5504	↓	12K	8.2K	27K	3.3K	8.2K	RS-4326	↓	↓	.05	None
E_1	RS-3857	RS-3862	RS-3863	RS-5504	↓	12K	8.2K	27K	3.3K	8.2K	RS-4326	↓	↓	.05	None
E_2	RS-3868	RS-3862	RS-3863	RS-5504	↓	18K	5.6K	27K	3.3K	8.2K	RS-4326	↓	↓	.05	None
E_3	RS-5104	RS-3862	RS-3863	RS-5504	↓	22K	Omit	27K	3.3K	8.2K	RS-4326	.01	.01	.05	None
E_4	RS-5104	RS-5201	RS-5301 or RS-5303	RS-5504	↓	22K	Omit	39K	Omit	12K	RS-4326	.01	.01	.05	7.5mmf
F	RS-5104	RS-5201	↓	RS-5504	↓	22K	Omit	39K	Omit	12K	RS-4707	.01	.01	.05	7.5mmf
G	RS-3868	RS-5201	↓	RS-5504	↓	18K	Omit	39K	Omit	12K	RS 4707	.05	.005	.05	7.5mmf
H	RS-3868	RS-5201	↓	RS-5504	↓	18K	Omit	39K	Omit	12K	RS-4707	.05	.005	.05	7.5mmf
J	RS-3868	RS-3862	RS-3863	RS-5504	↓	18K	8.2K	27K	Omit	8.2K	RS-4707	.005	.005	.01	Omit
K	RS-5104	RS-5201 or RS-5202 or RS-5203	RS-5301 or RS-5303 or RS-5310	RS-5504	↓	22K	Omit	39K	Omit	12K	RS-4707	.01	.01	.05	7.5mmf
L	RS-3868	↓	RS-5304	RS-5504	↓	18K	Omit	39K	Omit	12K	RS-4707	.005	.005	.05	6.8mmf
M	RS-3868	↓	RS-5309	RS-5504	↓	18K	Omit	39K	Omit	12K	RS-4707	.005	.005	.05	6.8mmf

① BOTH TR5 and TR6 must be the same type transistor.

COMPONENT WIRING DIAGRAM-MODELS P910 AND P895 F, G, J, L, M

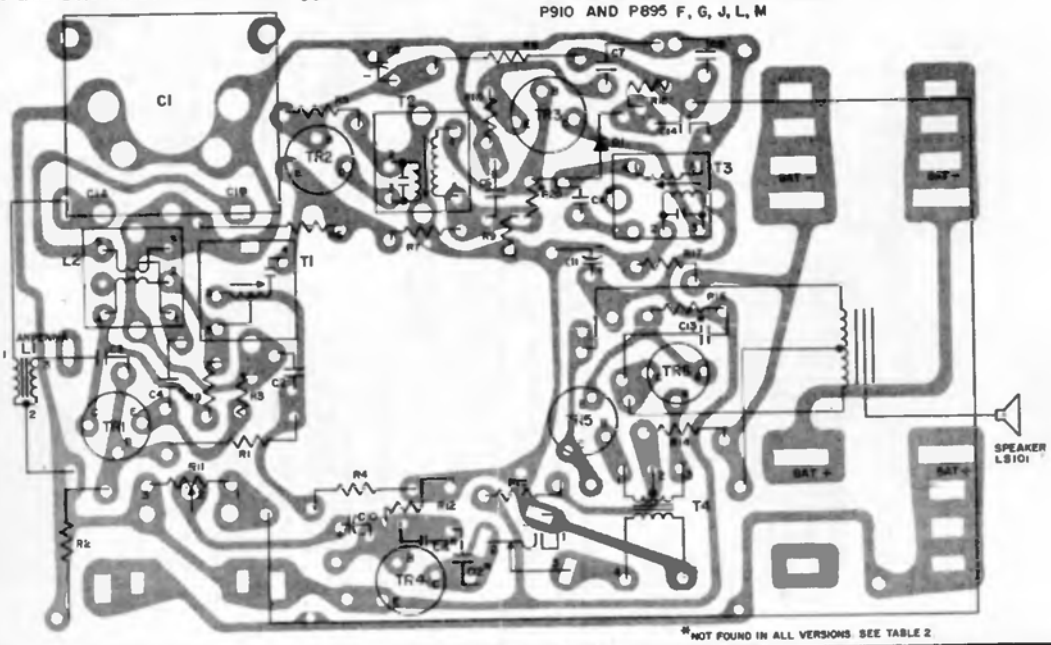

*NOT FOUND IN ALL VERSIONS SEE TABLE 2

GENERAL ELECTRIC

MODELS
P807G,H
P807S,T
P808G,H
P808S,T

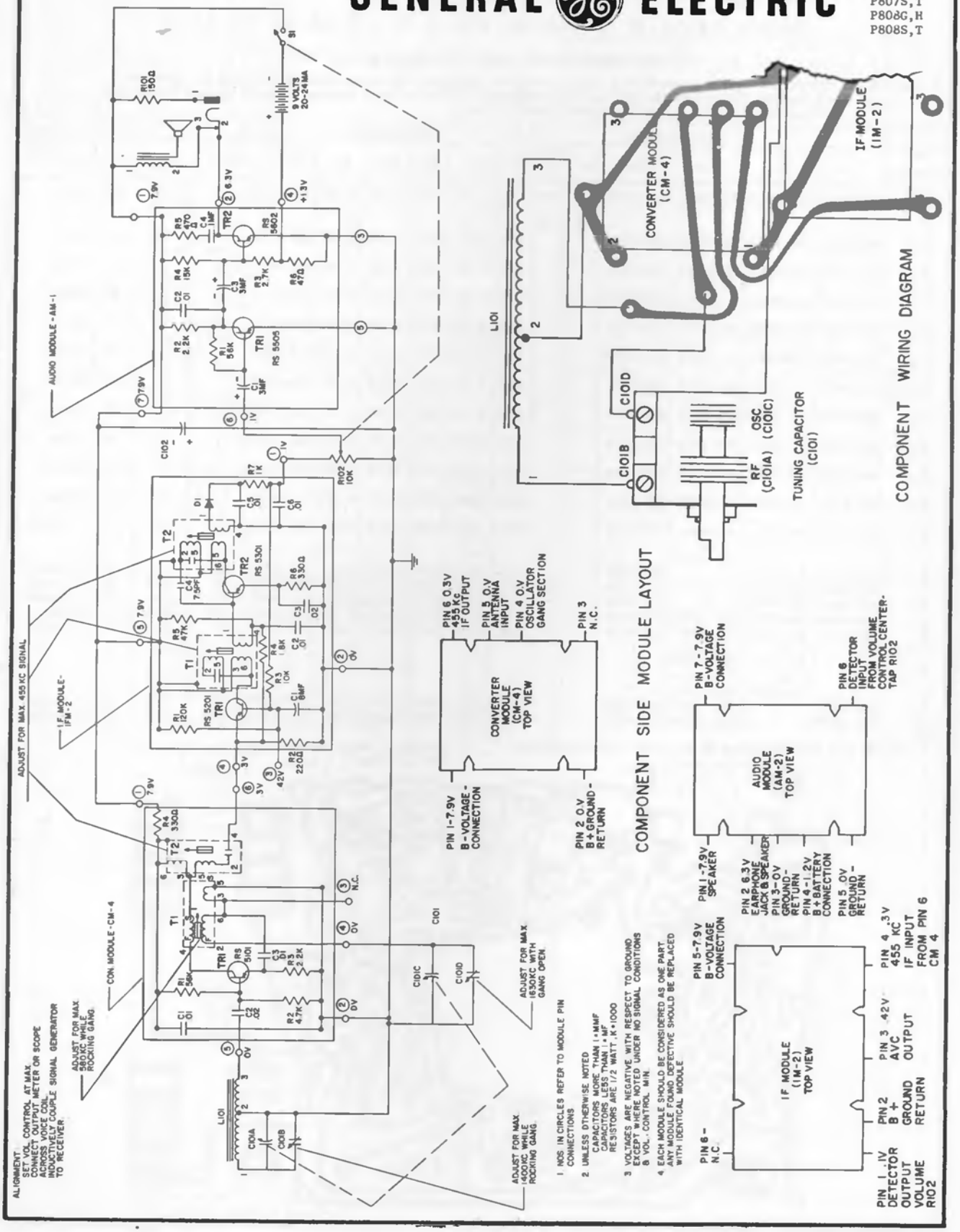

GENERAL ELECTRIC

Models P915A, B, P916A, B, P917A, B, P9151A, B, P9161A, B, P9171A, B

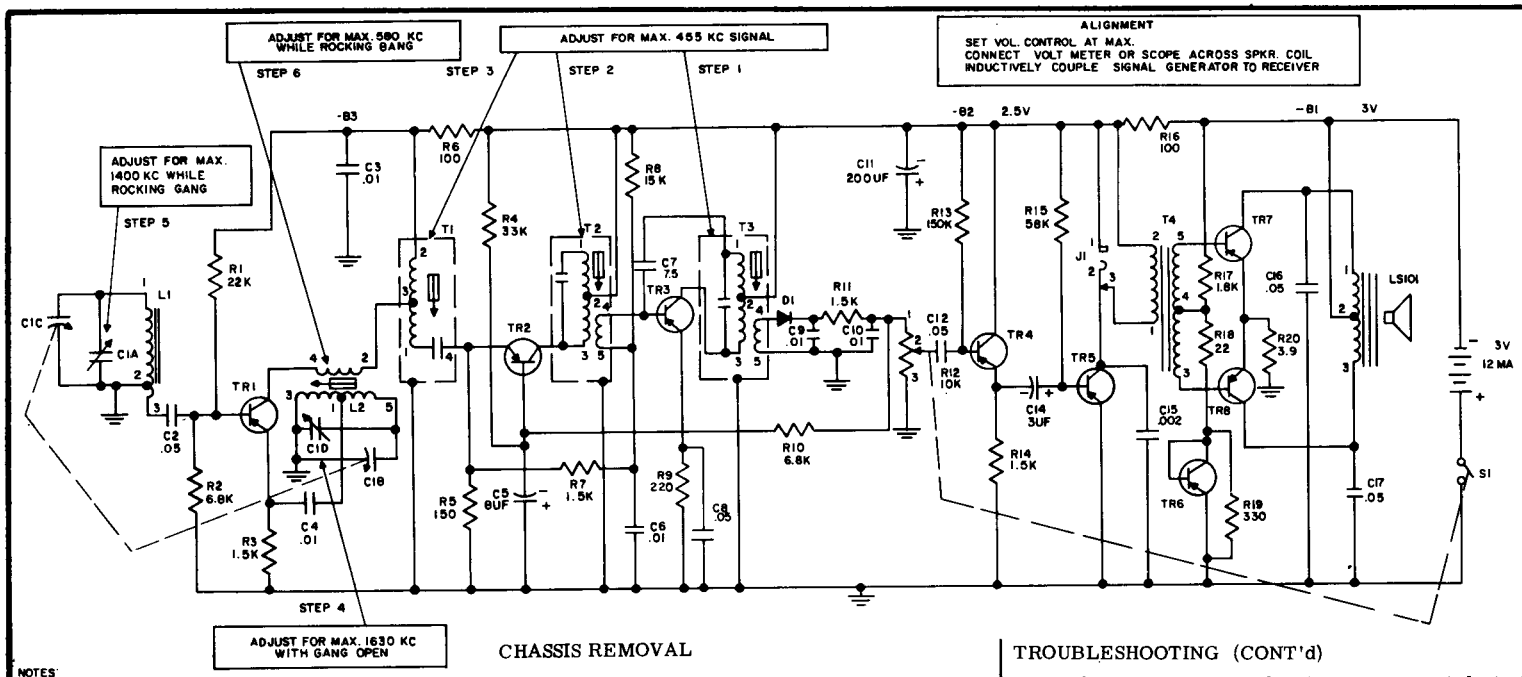

NOTES:

1. UNLESS OTHERWISE NOTED - CAP. MORE THAN 1 = UUF CAP. LESS THAN 1 = UF
2. VOLTAGES ARE NEGATIVE WITH RESPECT TO GRD. UNDER NO SIGNAL CONDITIONS AND VOL. CONTROL MIN.
3. REPLACE TRANSISTORS WITH TYPES SHOWN

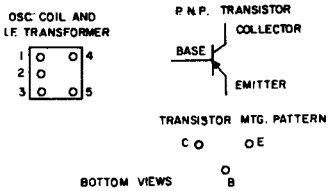

TABLE OF TRANSISTOR VOLTAGES				
	EMITTER	BASE	COLLECTOR	FUNCTION
TR1	0.7	0.8	2.4	CONVERTER
TR2	0.15	0.3	2.5	2 ND I.F AMP.
TR3	0.2	0.35	2.5	3 RD. I F. AMP.
TR4	0.75	0 8	2.5	1 ST AUDIO
TR5	0	0.3	2.2	AUDIO DRIVER
TR6	0	015	015	CURRENT REGULATOR
TR7	0.04	0 15	3.0	PUSH PULL
TR8	0.04	0.15	3.0	AUDIO OUTPUT

CHASSIS REMOVAL

1. Remove the dial knob screw with a small Phillips screw driver and lift off the dial knob.
2. Remove cabinet back by inserting a coin in the slot on the bottom of the set, giving it a slight twist.
3. Remove two 1/8" Phillips-head screws located underneath the batteries.
4. Remove 1/8" Phillips-head screw located next to the tuning capacitor.
5. Slide out the circuit board in the direction of the cabinet bottom and lift out.

TROUBLESHOOTING

A check of battery condition and total current drain of the receiver should be made first. All current measurements are made at quiescence with the receiver turned on, volume control at minimum, tuning gang closed, and with no-signal conditions.

The total quiescent receiver current drain is 12 to 14 mils. This is measured by inserting a milliammeter in series with the batteries.

TROUBLESHOOTING (CONT'd)

If an excessive total quiescent current drain is recorded, the individual collector currents of each transistor should be checked. An excessive current reading may mean a shorted transistor; no current will indicate that a transistor or associated circuit component is defective.

NO RECEPTION:

1. Check battery voltage and battery contacts.
2. Check on-off switch.
3. Check all antenna lead connections.
4. Check coil L2.

WEAK AUDIO:

1. Check battery voltage for 3 volts.
2. Check battery current.
3. Check transistor collector currents.
4. Check alignment.

INTERMITTENT:

1. Check battery contacts for corrosion.
2. Check solder connections on dip-soldered side of circuit board.

Intermittent audio, motorboating, and poor reception is frequently caused by poor battery contact.

GENERAL ELECTRIC

RADIO MODEL P925A

TABLE OF VOLTAGES*

	E	B	C
TR1	0.7	0.8	4.5
TR2	1.1	1.3	4.5
IM-1	PIN 1	PIN 2	PIN 4	PIN 5
	0.08	0	0.18	4.7
AM-4	PIN 1	PIN 3	PIN 4	PIN 5
	0.08	4.0	0.2	0.18
	PIN 6	PIN 7	PIN 8	PIN 9
	3.0	3.1	3.1	6.0
	PIN 10	PIN 11	PIN 12	PIN 13
	0	4.7	0.18	0.08

*R7 SET AT MID-POSITION

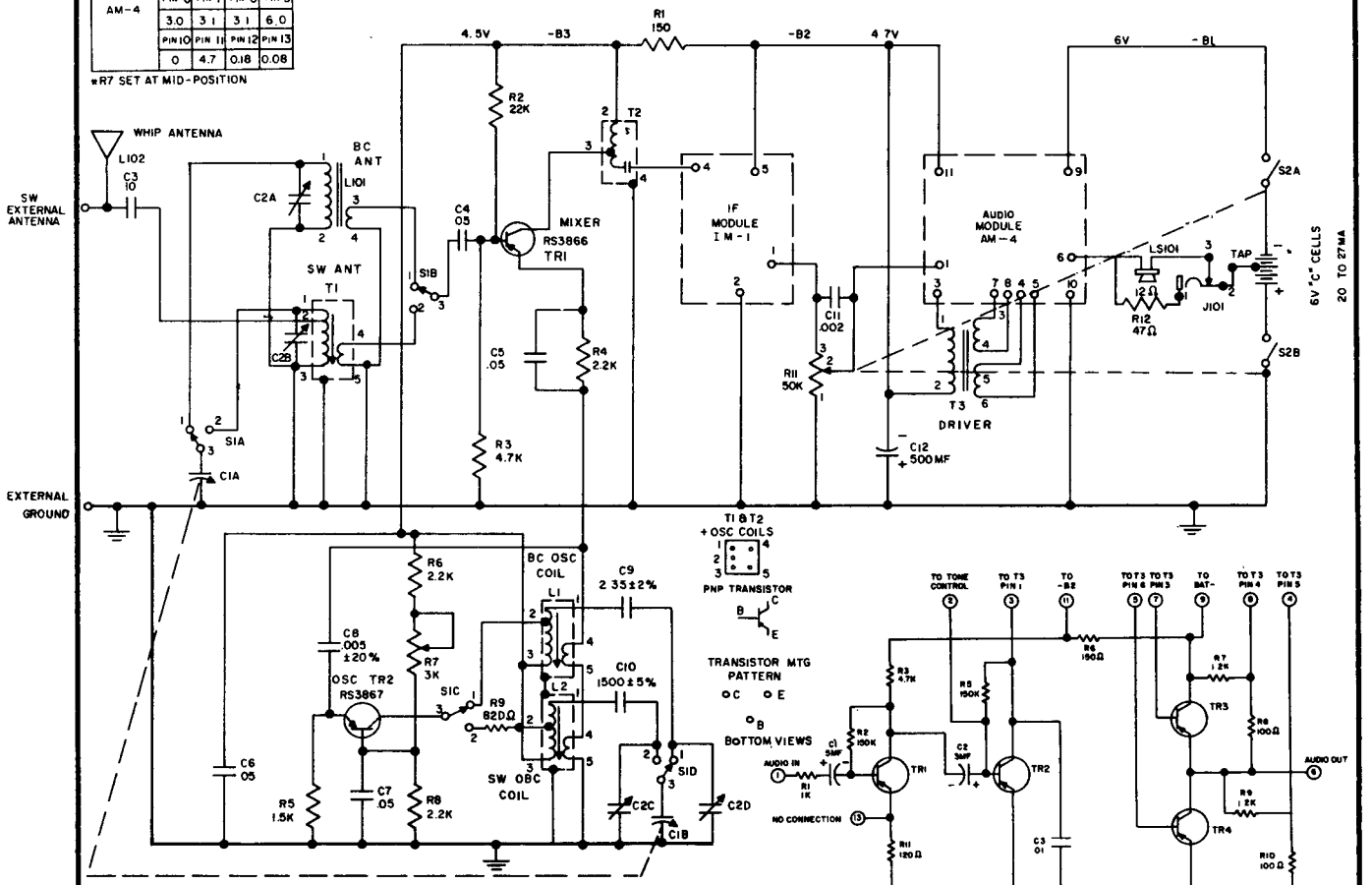

SWEEP AND PEAK ALIGNMENT PROCEDURES

STEP	SIGNAL GEN. INPUT	BAND SWITCH	TUNING GANG	AM GEN.	SWEEP GEN.	ADJUST THE FOLLOWING:	CONNECT VTVM ACROSS	CONNECT SCOPE ACROSS	REMARKS
1	Inductively Couple to AM Antenna Loop (L101)	BC	Open	455KC		T2, T1 of IF Module (IM-1), T2 of the circuit board.	Voice Coil	Voice Coil	
2	High side to External SW Ant. terminal.Δ Low side to External Ground terminal.	**SW	12MC	12MC		C2C for Maximum Amplitude	Voice Coil	Voice Coil	Adjust Signal Generator to 910 KC above wanted frequency to observe image frequency response.
3	High side to External SW Ant. terminal. Low side to External Ground terminal.	SW	4MC	4MC		L2 for Maximum Amplitude	Voice Coil	Voice Coil	Adjust Signal Generator to 910 KC above wanted frequency to observe image frequency response.
4	Repeat steps 1 and 2 until no further adjustment is required.								
5	High side to External SW Ant. terminal. Low side to External Ground terminal.	SW	12MC	12MC	*12MC	C2B for Maximum Amplitude	Voice Coil	*Across pin 1 of IF Module (IM-1) and Ground	*Adjust Sweep width control or center frequency to observe image response.
6	High side to External SW Ant. terminal. Low side to External Ground terminal.	SW	4MC	4MC	*4MC	T1 for Maximum Amplitude	Voice Coil	*Across pin 1 of IF Module (IM-1) and Ground	*Adjust Sweep width control or center frequency to observe image response.
7	Repeat steps 4 and 5 until no further adjustment is required.								
8	Inductively Couple to AM Antenna Loop	BC	Open	1630 KC		C2D for Maximum Amplitude	Voice Coil	Voice Coil	
9	Inductively Couple to AM Antenna Loop	BC	1400 KC	1400 KC	*1400 KC	C2A for Maximum Amplitude	Voice Coil	*Across pin 1 of IF Module (IM-1) and Ground	Rock Gang during Peak Alignment
10	Inductively Couple to AM Antenna Loop	BC	580 KC	580 KC	*580 KC	L1 for Maximum Amplitude	Voice Coil	*Across pin 1 of IF Module (IM-1) and Ground	Rock Gang during Peak Alignment
11	Repeat steps 7, 8 and 9 until no further adjustment is required.								

PIN CONNECTIONS FOR AUDIO MODULE (AM-4)

CONNECTION FOR IF MODULE (IM-1)

1. UNLESS OTHERWISE NOTED CAPACITORS MORE THAN 1=MMF OR PF CAPACITORS LESS THAN 1=MF RESISTORS ARE 1/2 WATT K=1000
2. VOLTAGES ARE NEGATIVE WITH RESPECT TO GROUND UNDER NO SIGNAL CONDITIONS AND VOLUME CONTROL MIN.
3. REPLACE TRANSISTORS WITH TYPES SHOWN BY CATALOG NO LISTED IN PARTS LIST
4. S1 SHOWN IN BROADCAST POSITION

SIA SIB

SID SIC

BANDSWITCH VIEWED FROM COMPONENT SIDE OF BOARD

* SWEEP ALIGNMENT ONLY

GENERAL ELECTRIC

MODEL P955A

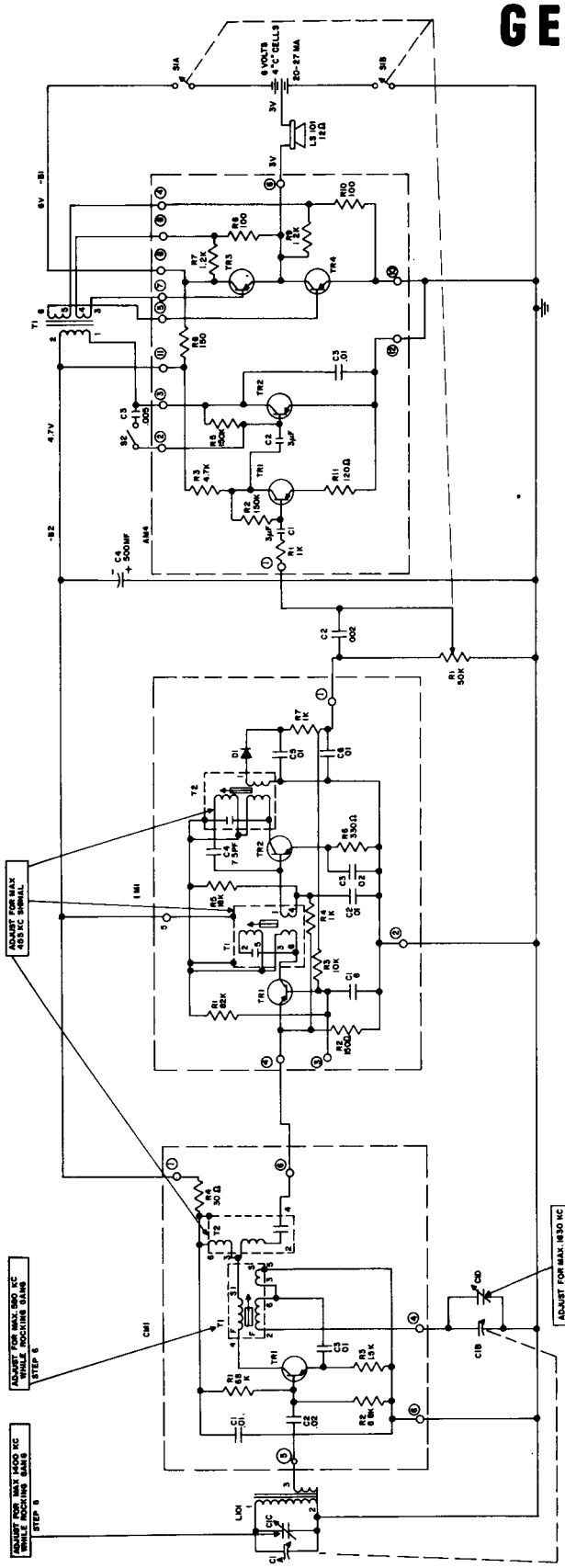

MODULES

This radio uses three high-reliability modules in its construction. The modules are self-contained circuit stages, each grouped on a miniature circuit board, which themselves are mounted on and soldered into the main circuit board just like any other component (transistor, capacitor, etc.).

This method of manufacture provides high reliability at an optimum cost. In fact, it allows the cost of the module to fall into the same range as tubes or transistors. This means that defects in the circuits involved in the modules need only be replaced with a good unit.

Almost always this will result in an easier, quicker, and more economical repair than would be possible if the serviceman were to try to locate and replace a defective component within a module. This radio uses such modules in the converter, I. F. and Audio stages.

CHASSIS REMOVAL

1. Remove volume and tuning knobs.
2. Remove two Phillips-head screws from cabinet back.
3. Remove seven hex-head screws from circuit board.
4. Label and unsolder wires going to speaker and battery terminals.
5. Carefully lift circuit board from cabinet.

TROUBLESHOOTING

IMPORTANT: The audio output terminals of the radio must be D. C. isolated from ground during servicing procedures. This is to prevent the audio output transistors from becoming damaged by excess voltages in the audio circuit. Therefore, care must be exercised in using test equipment that may cause a D. C. path to ground.

The total battery current drain should always be ascertained before proceeding with the servicing. These current readings should be taken with the receiver in the "OFF" position. Total current is measured by placing a jumper across S1A and measuring the current across the switch terminals of S1B. This current reading should fall between 20-27 MA. After noting this current, remove the jumper across S1A and place it across the terminals of S1B. Measure the current drain across the switch terminals of S1A. This current reading should be approximately the same as the previous reading. Should any significant difference in current readings occur when making this check, a defective audio output stage is indicated.

1. VOLTAGES ARE NEGATIVE WITH RESPECT TO GROUND UNDER NO SIGNAL CONDITIONS AND NORMAL VOLUME CONTROL
2. UNLESS OTHERWISE NOTED CAPACITORS MORE THAN 1 MMF ARE MICROFARADS (MFD) CAPACITORS LESS THAN 1 MF ARE PICOFARADS (PF) OR MMF (1/1000 MFD)
3. S2 SHOWN IN HI (TREBLE) POSITION

TABLE OF VOLTAGES

CM1	PIN 1	PIN 2	PIN 3	PIN 4	PIN 5
	4.7	0		2	
IM1	PIN 1	PIN 2	PIN 3	PIN 4	PIN 5
	1	0		2	4.7
AM4	PIN 1	PIN 2	PIN 3	PIN 4	PIN 5
	1.9	3.0	3.2	5.2	7.3
	PIN 6	PIN 7	PIN 8	PIN 9	PIN 10
	8.0	0	4.7	0	3.2
	PIN 11	PIN 12			
	4.7	0			

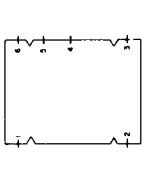

PIN CONNECTIONS FOR CONVERTER MODULE (CM-1) (VIEWED FROM COMPONENT SIDE)

PIN CONNECTIONS FOR AUDIO MODULE (AM-4) (VIEWED FROM COMPONENT SIDE)

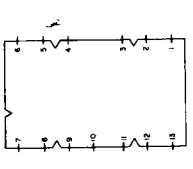

PIN CONNECTIONS FOR IF MODULE (IM-1) (VIEWED FROM COMPONENT SIDE)

GENERAL ELECTRIC

MODELS T215A, T216A, T265A, T266A, C540A and C541A

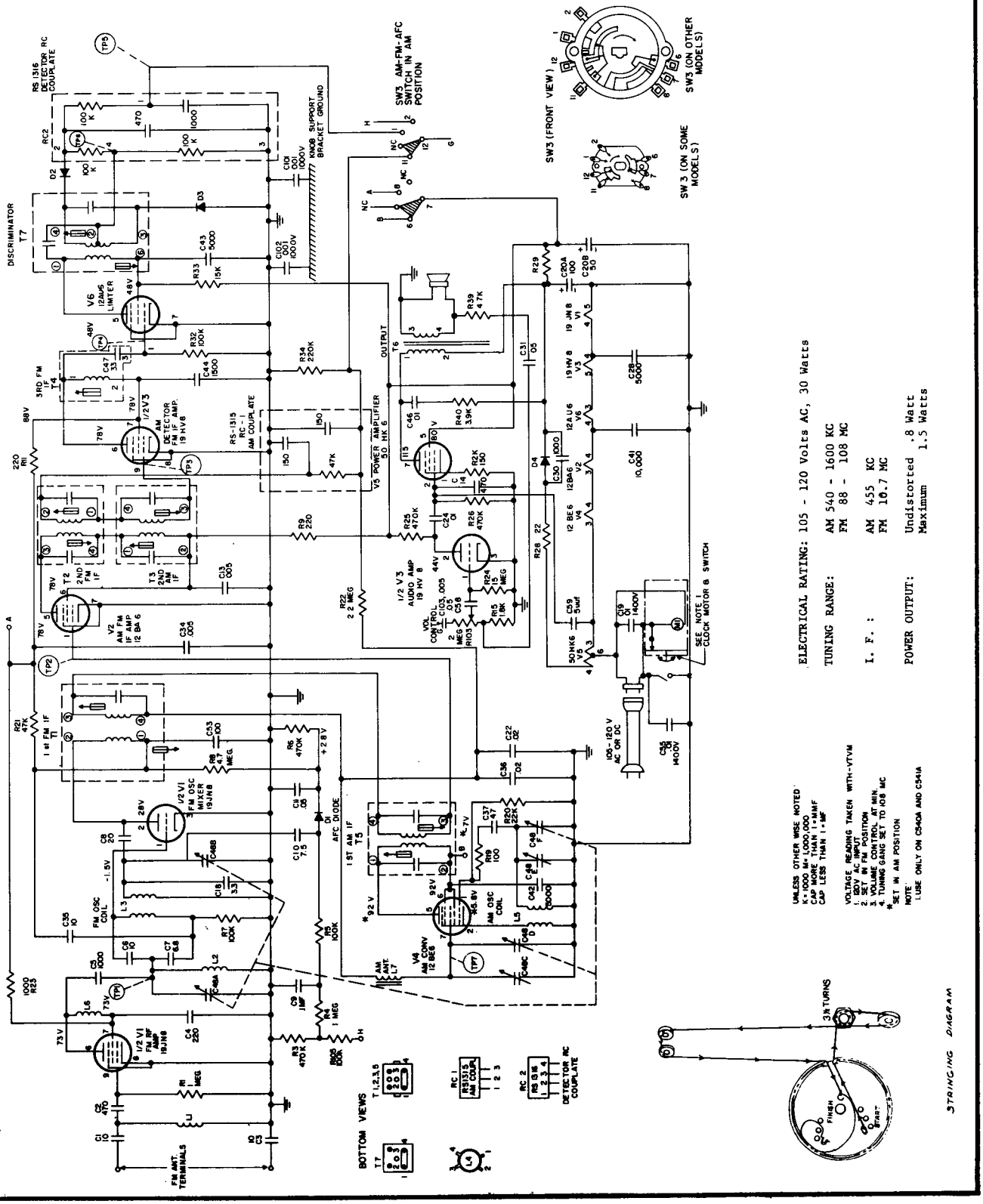

GENERAL ELECTRIC

MODEL RP-1590A, C

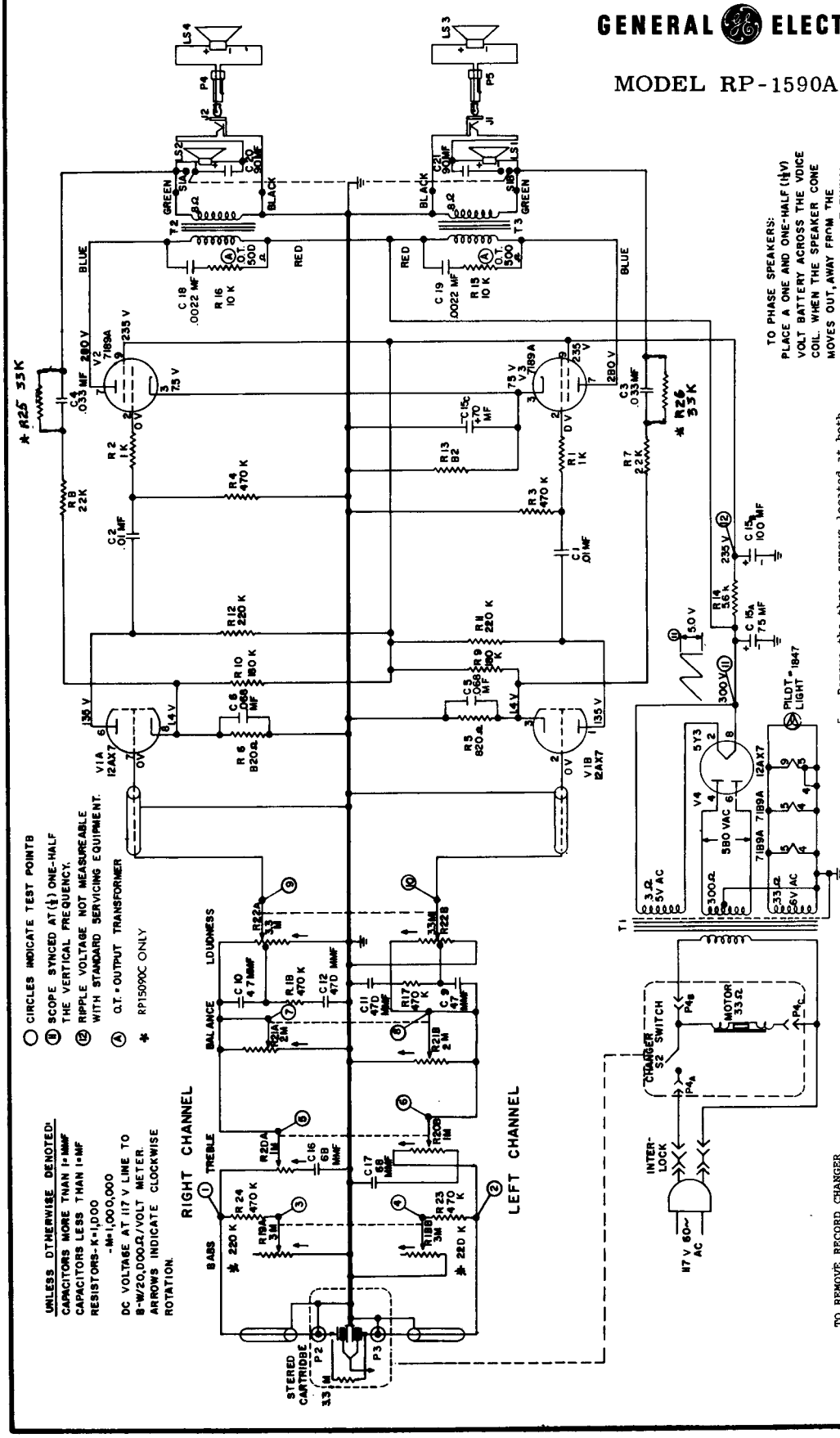

TO REMOVE RECORD CHANGER

1. Remove the three screws on the tube replacement cover and remove the cover.
2. Remove the two screws on the metal amplifier cover and remove the cover by pulling up on the tab provided on the back side and lift the cover out.
3. Reach under the motor board and flip the right side shipping screw clip to a vertical position. Lift the right side of the changer to clear the shipping screw clip and slip the left shipping screw through the slotted hole in the motor board to clear the changer. Rest the changer on its back edge in the compartment.
4. Remove the signal and power plugs from the changer.
5. Remove the changer from the cabinet.

TO REMOVE CHASSIS

1. Follow steps 1 through 5 as described in "To Remove Record Changer."
2. Remove the control knobs, (pull up).
3. Remove the three screws on the control panel escutcheon and remove the escutcheon.
4. Remove the screw on the perforated back cover and remove the cover.
5. Remove the three screws located at both ends and front center of the control panel mounting board and remove the board.
6. Remove the two 5/16 inch nuts holding the control panel to the mounting board.
7. Unsolder the four (4) leads on the expanded stereo switch.
8. Remove the screws holding the lead dresser and electrolytic.
9. Remove the three 5/16 inch nuts holding the amplifier chassis.
10. Remove the two 5/16 inch nuts holding the left and right channel output jacks at the rear of the compartment.
11. Remove the screws holding the interlock.
12. Remove the pilot light socket from the clip, (pull up).
13. Unsolder the speaker leads, and label to assure the correct speaker phasing when reassembling the set.
14. Remove the chassis from the cabinet.

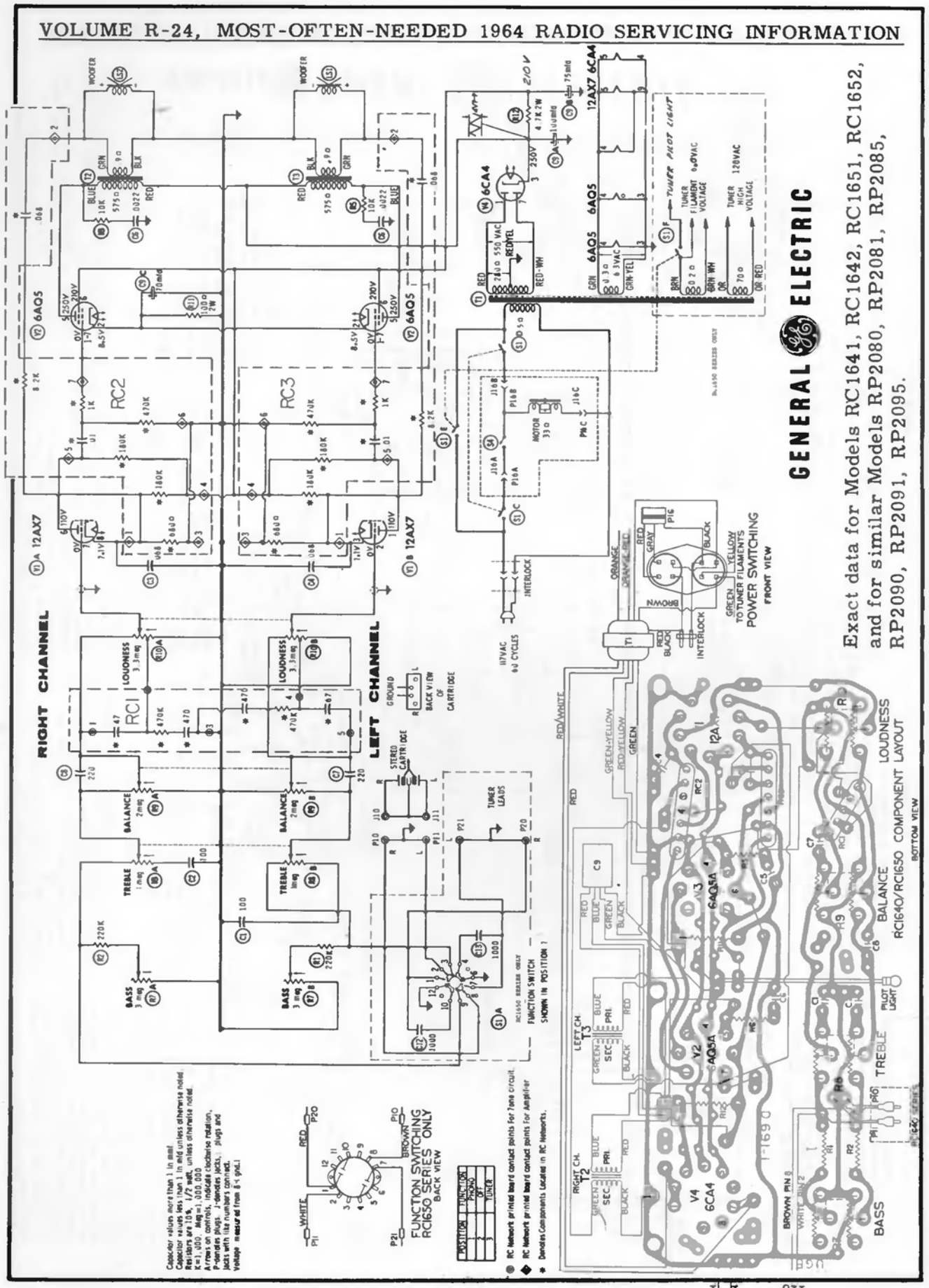

GENERAL ELECTRIC

Exact data for Models RC1641, RC1642, RC1651, RC1652, and for similar Models RP2080, RP2081, RP2085, RP2090, RP2091, RP2095.

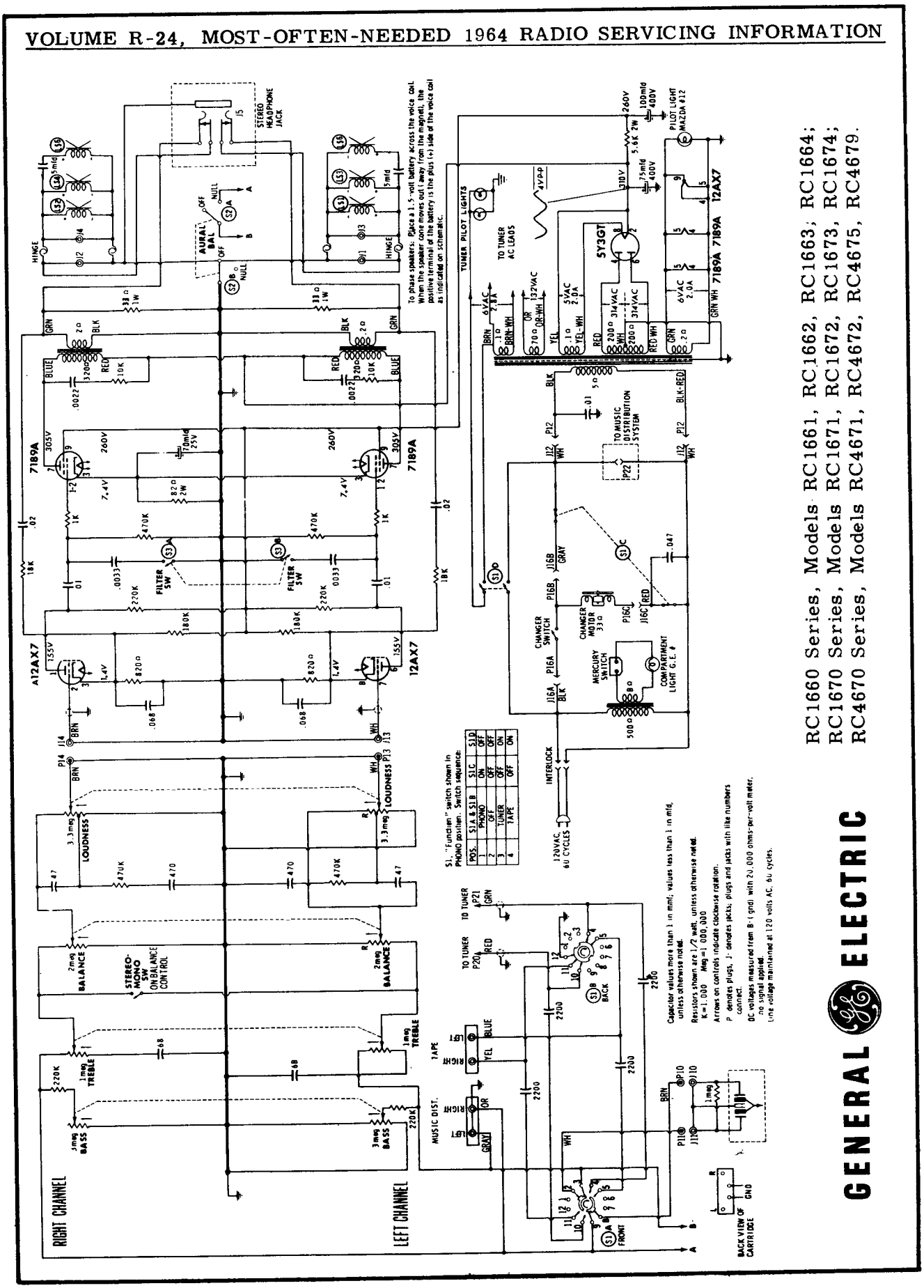

RC1660 Series, Models RC1661, RC1662, RC1663, RC1664;
RC1670 Series, Models RC1671, RC1672, RC1673, RC1674;
RC4670 Series, Models RC4671, RC4672, RC4675, RC4679.

GENERAL ELECTRIC

GENERAL ELECTRIC

RP2130 Series, Models RP2131A, RP2138A,
RP2110 Series, Models RP2111 & RP2113,
Models of the RP1530 Series are very similar.

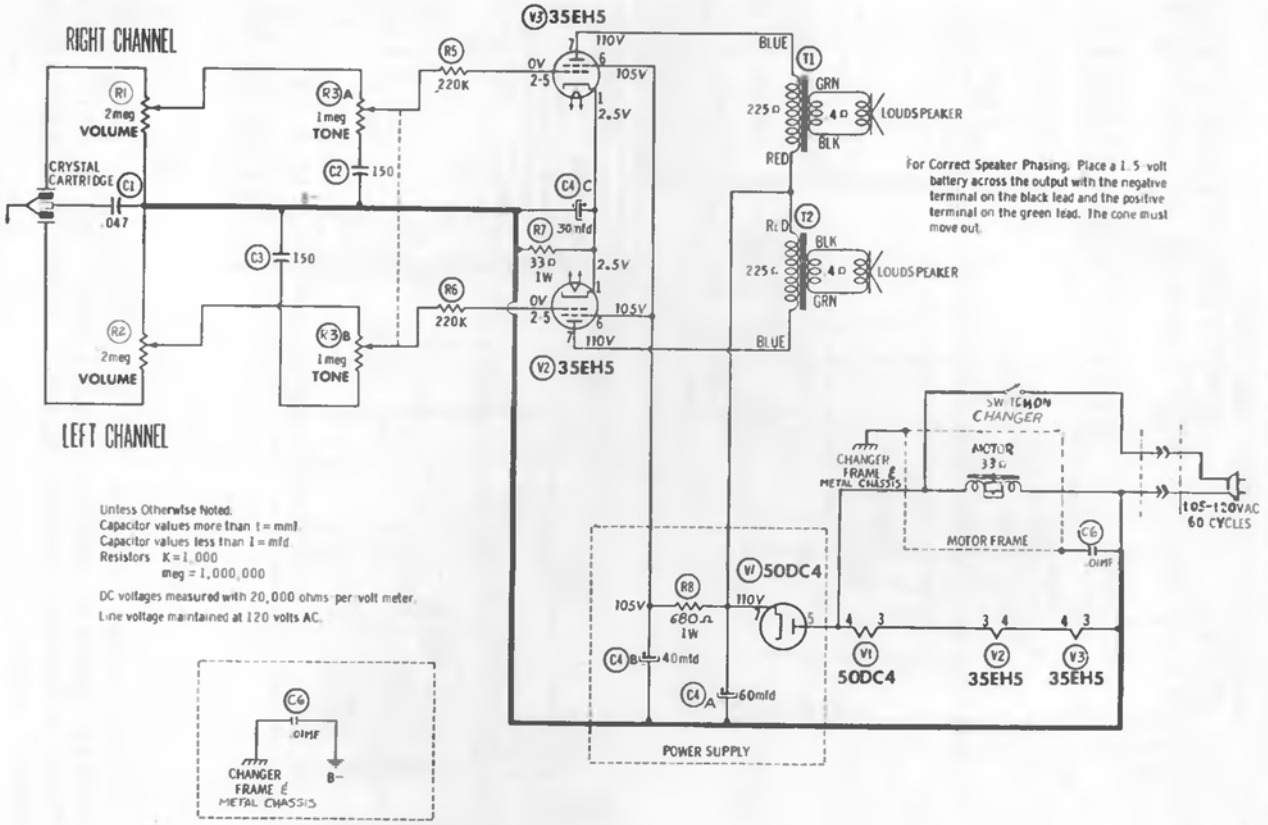

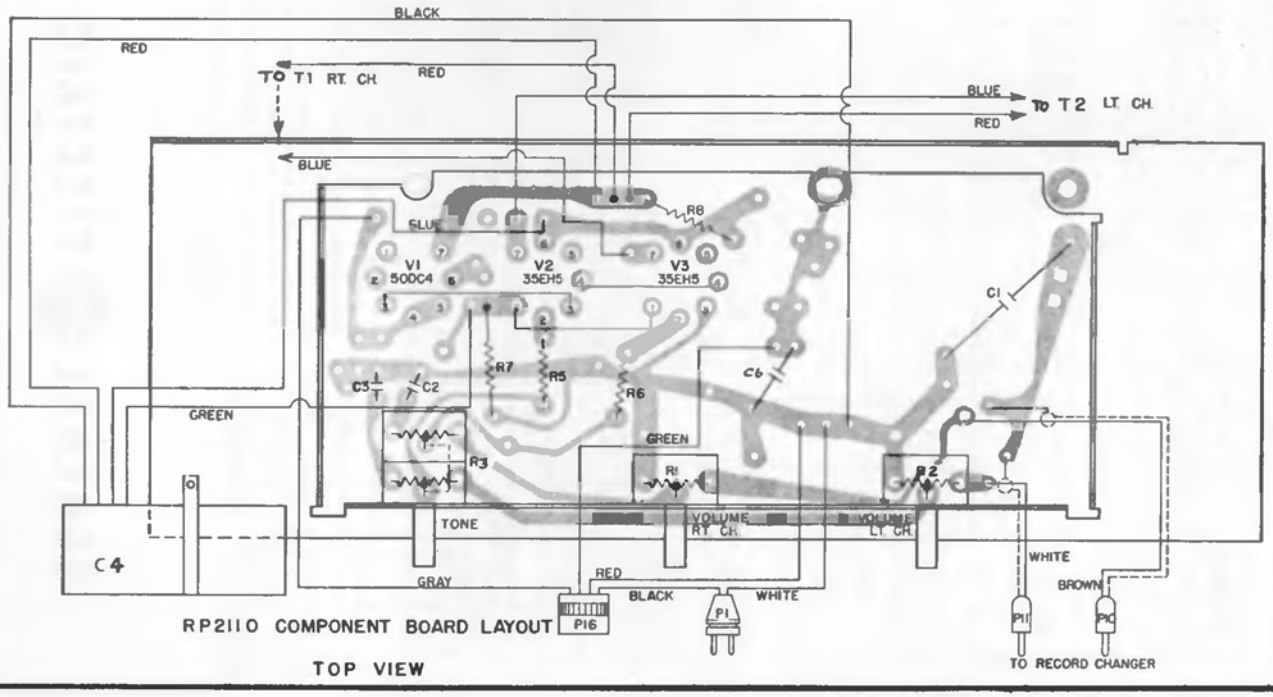

RP2110 COMPONENT BOARD LAYOUT

TOP VIEW

Hitachi, Ltd.

MODEL TH-650

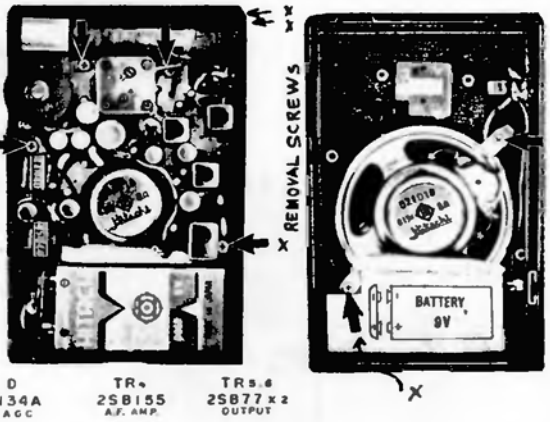

CIRCUIT SYSTEM ..... 6-transistor superheterodyne
TUNING RANGE ..... 535 kc~1,605 kc
INTERMEDIATE FREQUENCY ..... 455 kc

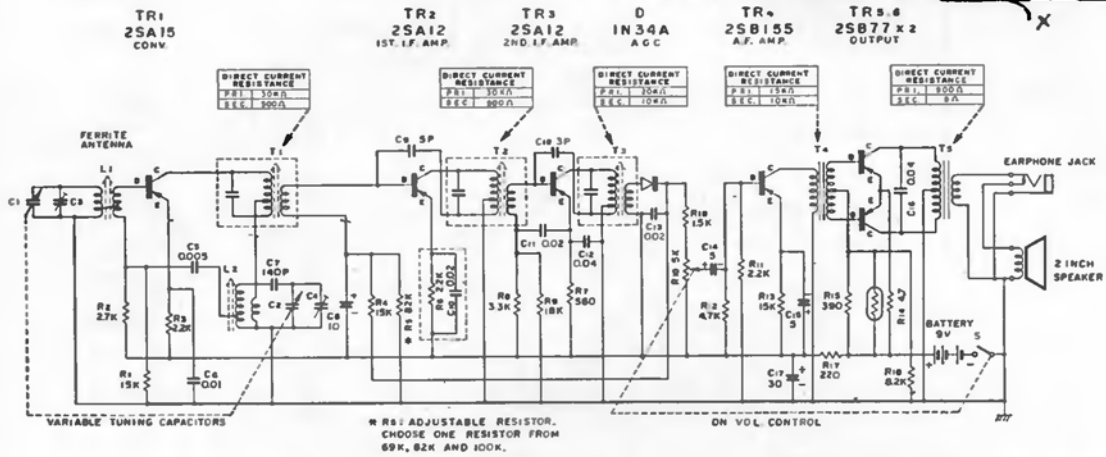

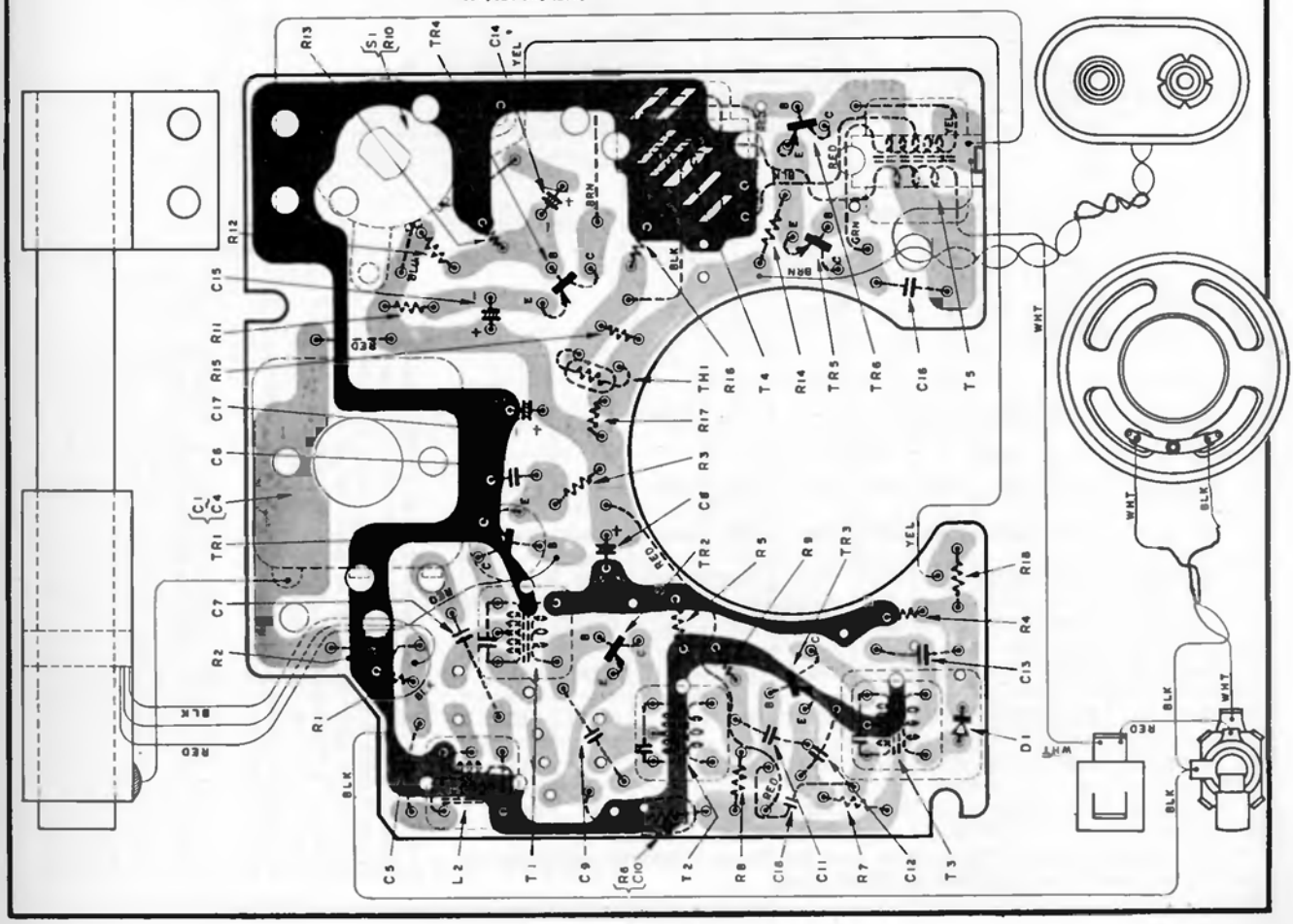

Magnavox

93 SERIES AMPLIFIER CHASSIS

(93-01, 93-02, 93-03, 93-04, & 93-05)

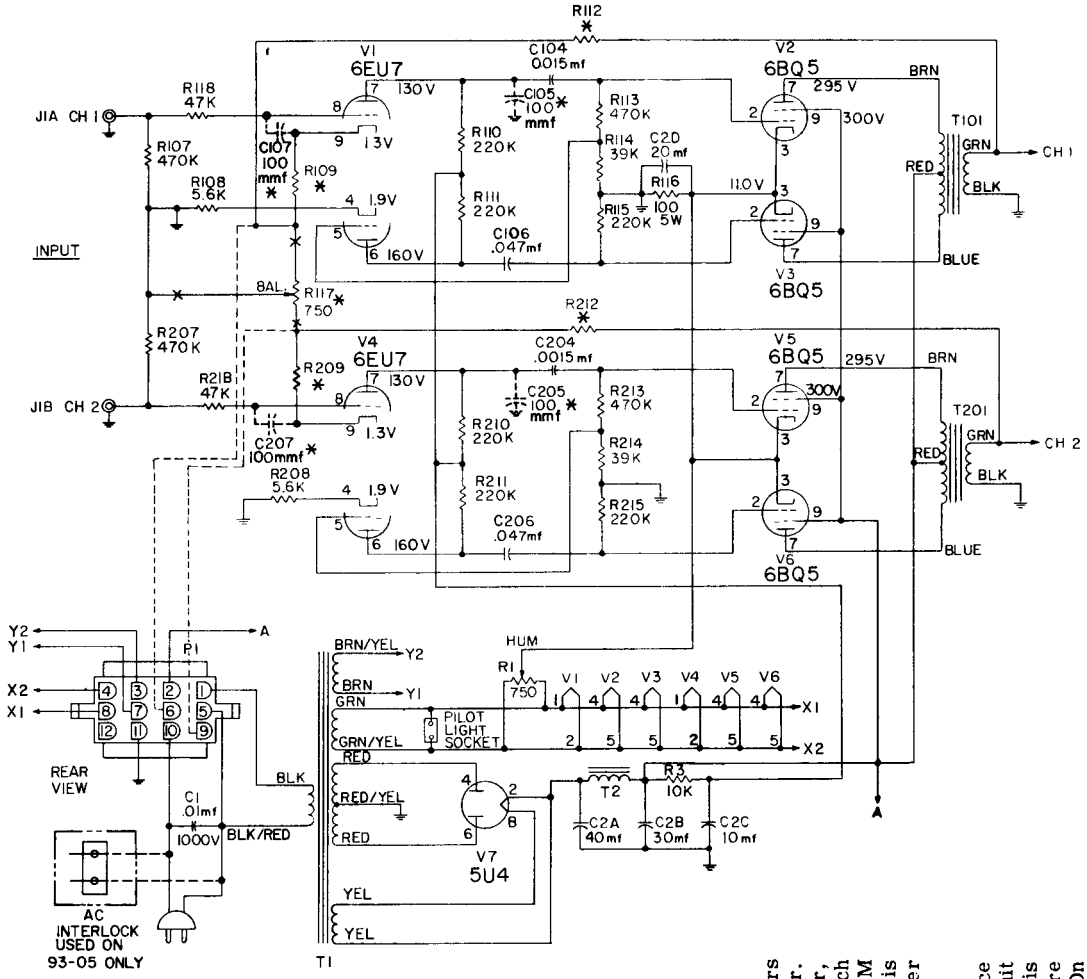

CHASSIS	R109	R209	R112	R212	R117	C105	C205	C107	C207
93-01-00	4700	4700	2200	2200	USE	USE	USE	OMIT	OMIT
93-02-00	2200	2200	3900	3900	USE	USE	USE	OMIT	OMIT
93-02-10	2200	2200	3900	3900	USE	OMIT	OMIT	USE	USE
93-03-00	4700	4700	2200	2200	OMIT	USE	USE	OMIT	OMIT
93-03-10	4700	4700	2200	2200	OMIT	OMIT	OMIT	USE	USE
93-04-00	2200	2200	3900	3900	OMIT	USE	USE	OMIT	OMIT
93-04-10	2200	2200	3900	3900	OMIT	OMIT	OMIT	USE	USE
93-05-00	4700	4700	2200	2200	OMIT	OMIT	OMIT	USE	USE

* When Balance Control (R117) is not used the Power Connector will have two additional connections as shown in dotted lines.

The 93 Series Amplifiers are Stereo Amplifiers designed to work in conjunction with an AM-FM Tuner. These chassis contain seven tubes, including rectifier, and provide approximately 15 watts output for each channel. All voltages, including those for the AM-FM Tuner are obtained from these amplifiers. This necessitates using a 5U4 as a rectifier and a heavier power transformer than is normally used.

The 93-01 and 93-02 Amplifiers contain a "Balance Control". This control is located in the cathode circuit of (1/2) of the 6EU7 used as the Audio Amplifier. This control will vary the output of each channel to assure proper balance when reproducing stereo records. On all others this control has been eliminated since these amplifiers are used with AM-FM Tuners which have the Balance Control as part of the tuner.

Magnavox

(59-11, & 59-14 & 59-27)

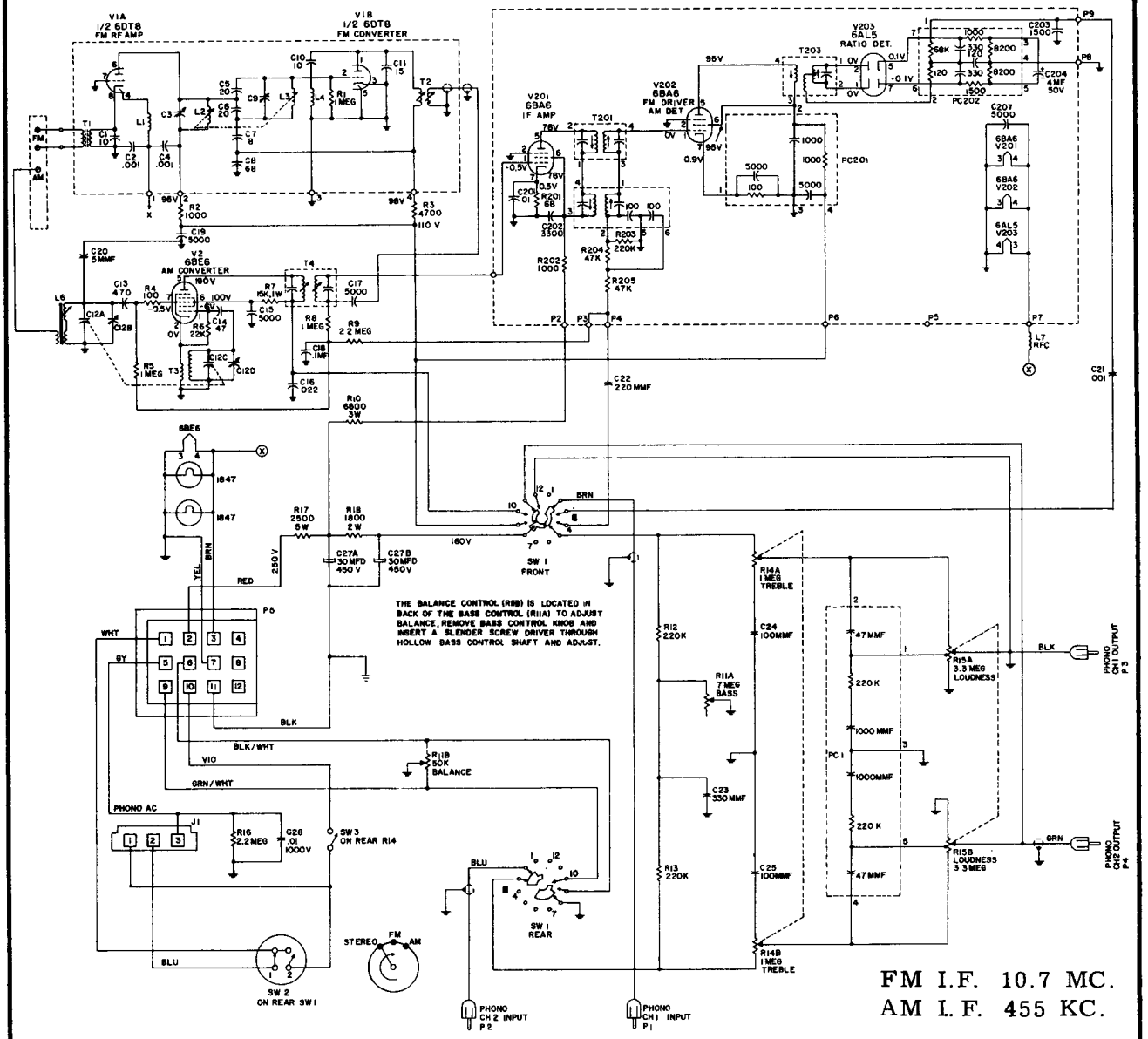

FM I.F. 10.7 MC.
AM I.F. 455 KC.

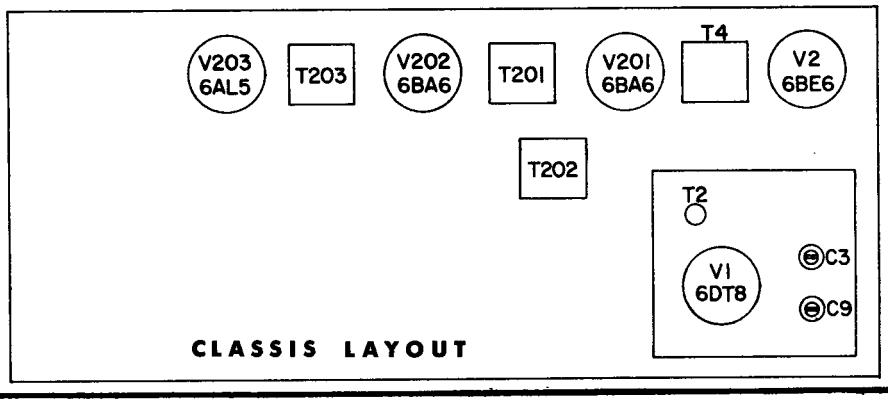

CLASSIS LAYOUT

MONTGOMERY WARD

MODELS JWR-953A and JWR-1033B

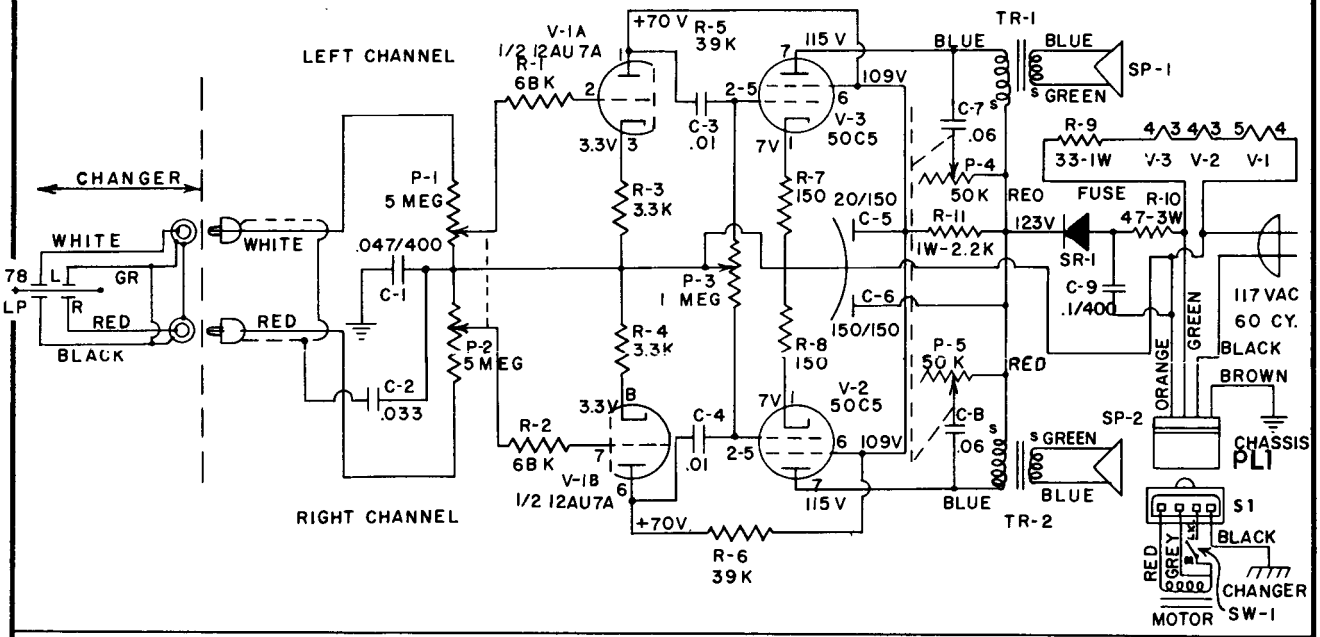

MONTGOMERY WARD Models JWR-956A and JWR-1035B

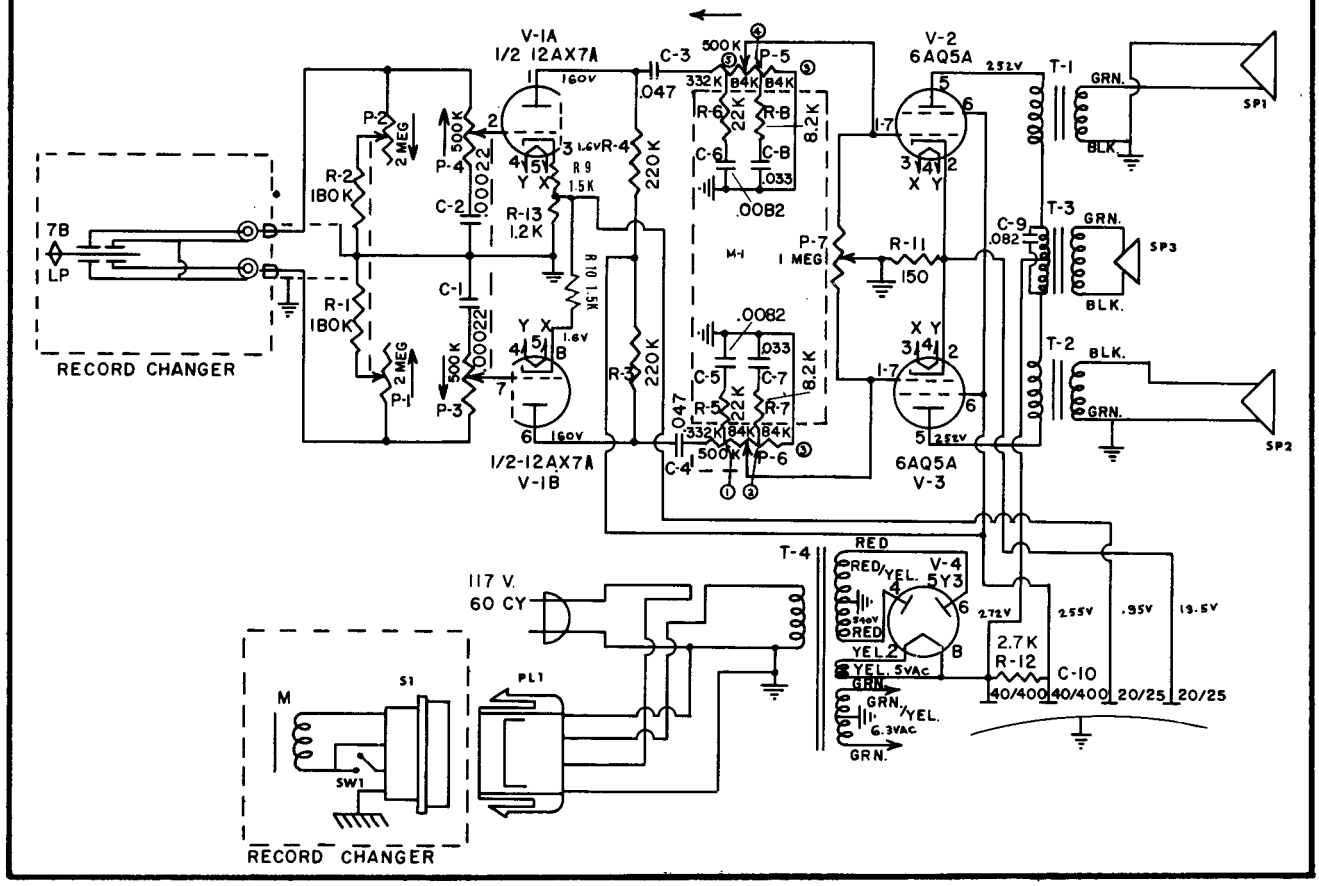

MONTGOMERY WARD

Model GEN-951A exact material. Model GEN-769A same less tone control. Models GEN-1730A, GEN-1731A, are also the same but less phono circuit.

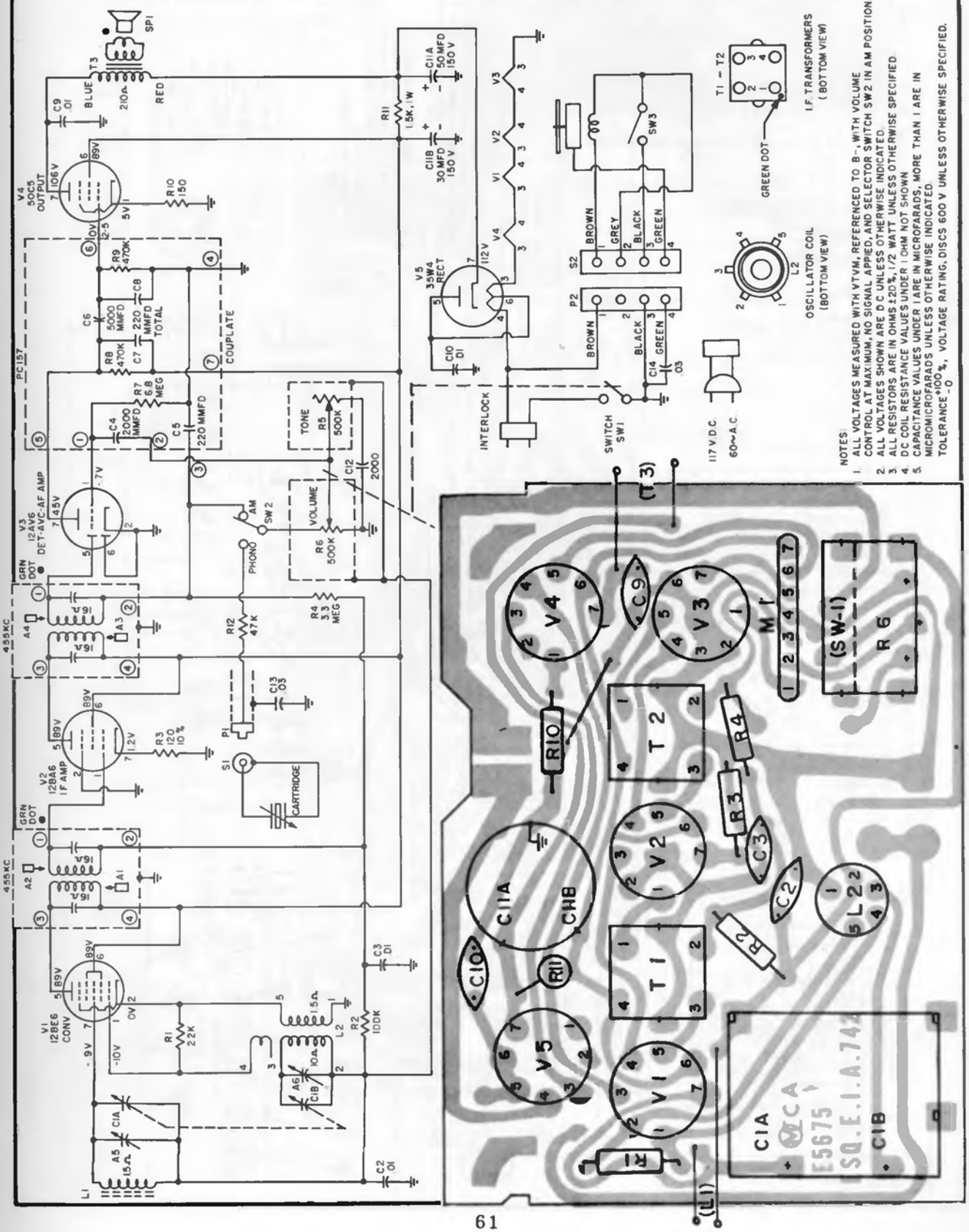

MOTOROLA

Models 3AT and 3MT (Continued on the next page)
Models BKA63, CTA63, CTM63, and PCA63, are very similar.

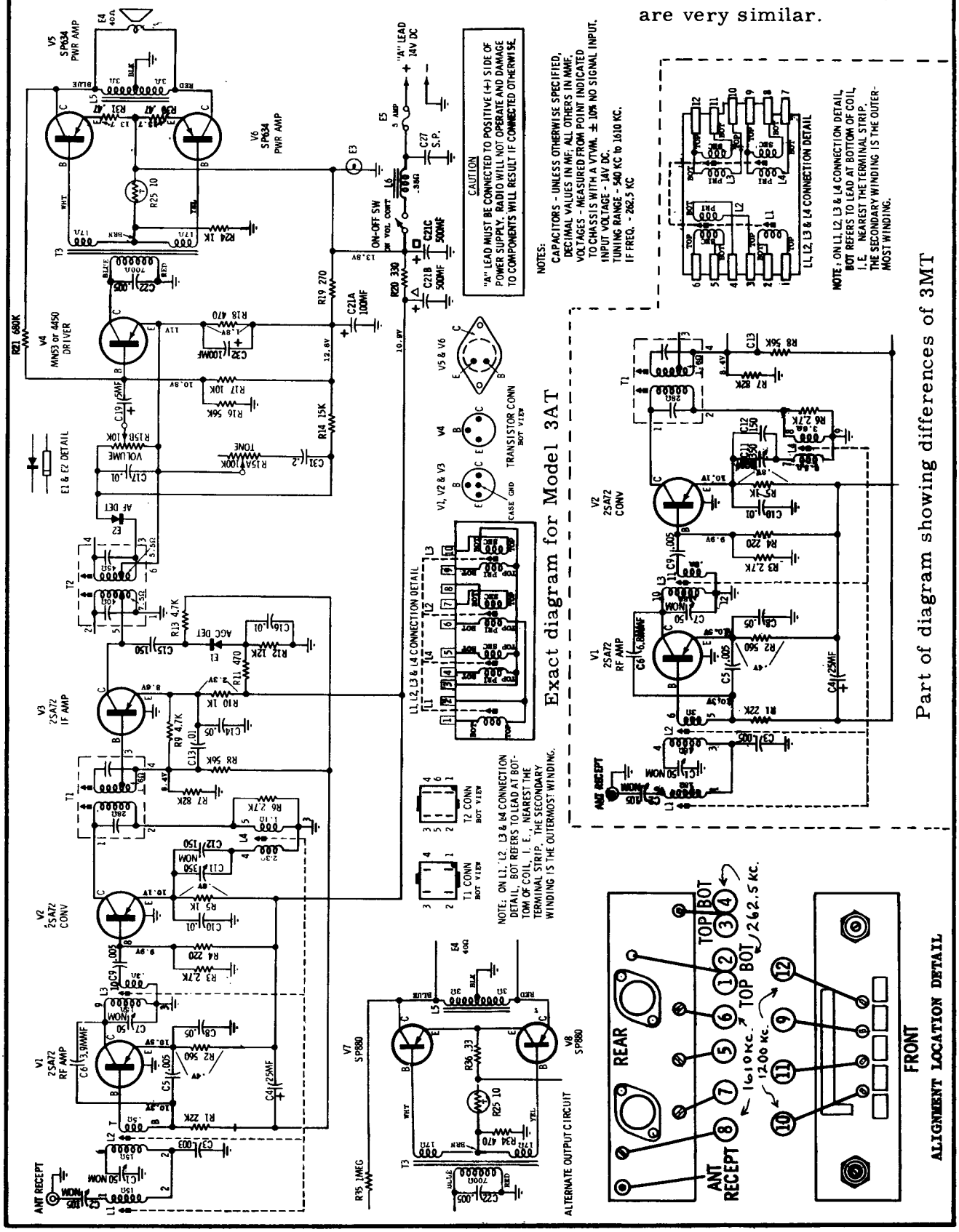

MOTOROLA Model 3AT

Continued from preceding page, at left, other models listed on that page are very similar.

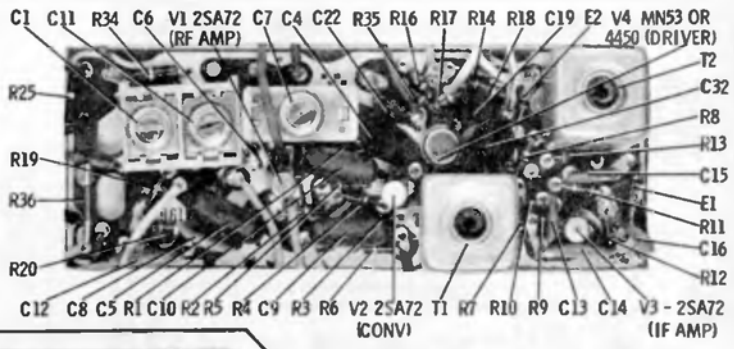

PARTS LOCATION FOR SETS USING ALTERNATE OUTPUT CIRCUIT

NOTES:
----PLATING ON COMPONENT SIDE
* COMPONENT VALUES USED IN ALTERNATE OUTPUT CIRCUIT ONLY.
#POINT CONNECTS TO GND THRU COMPONENT SIDE PLATING.

PLATED CHASSIS BOARD WIRING DIAGRAM
COMPONENTS SHOWN ARE ACTUALLY LOCATED ON OPPOSITE SIDE - COMPONENT SIDE PLATING CONTAINS GROUND CONNECTIONS ONLY

MOTOROLA

MOTOROLA FORD

3TME.....C3GA-18806
3TMF.....C3AA-18806
3TMY.....C3YA-18806

(Service material continued on the next page at right)

PLATED CHASSIS BOARD DESCRIPTION - Motorola's PLAcir chassis has plating on both sides of the chassis board. The exposed side contains the actual circuit connections while the plating on the component side of the chassis board provides a convenient chassis B-return for components and circuit wiring. Plating on the component side also provides shielding between the top and bottom of the unit.

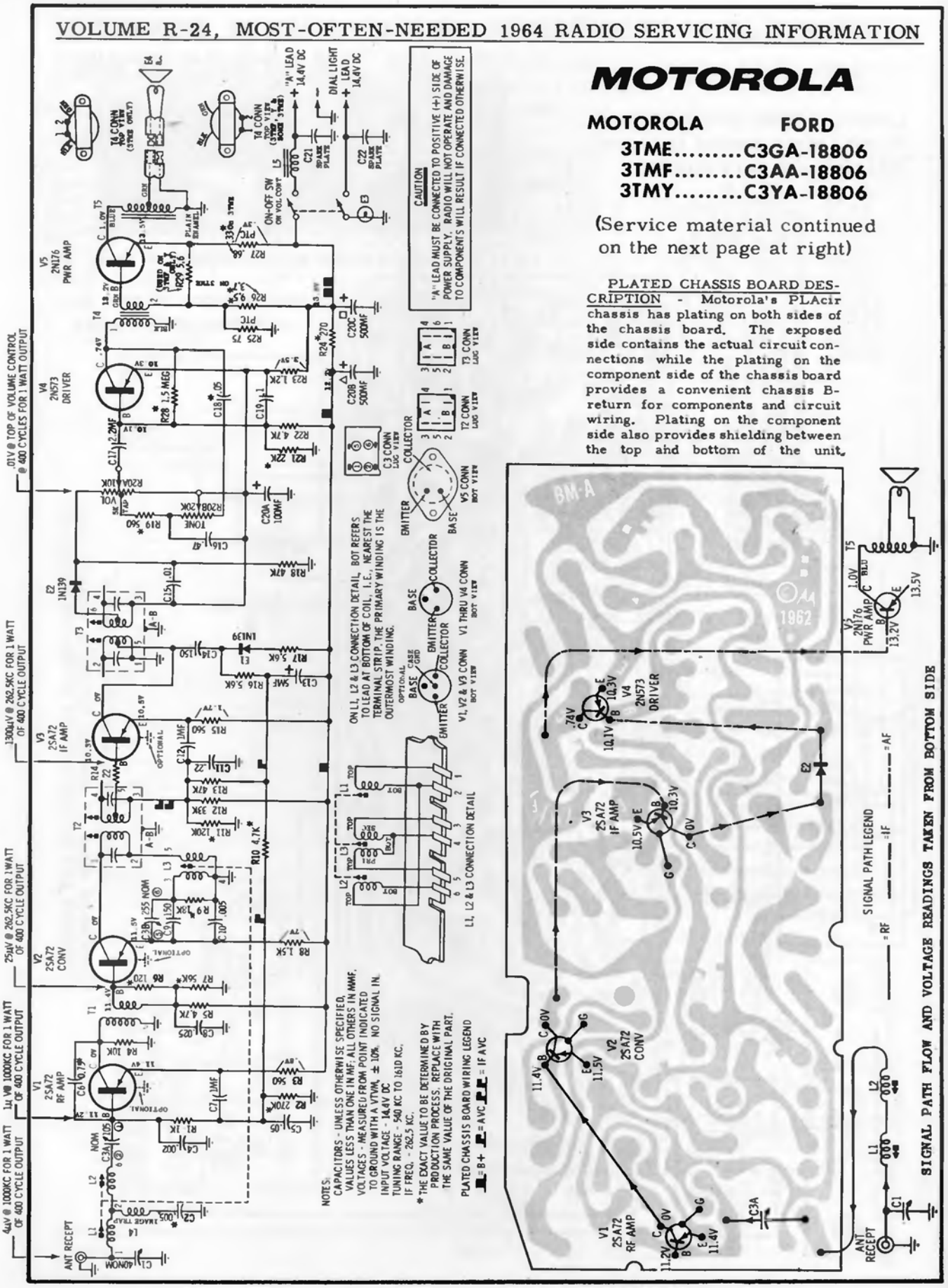

MOTOROLA 3TME, 3TMF, 3TMY, Continued from preceding page, at left

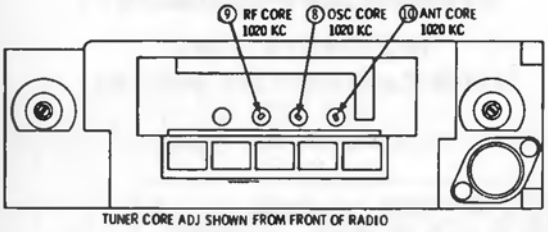

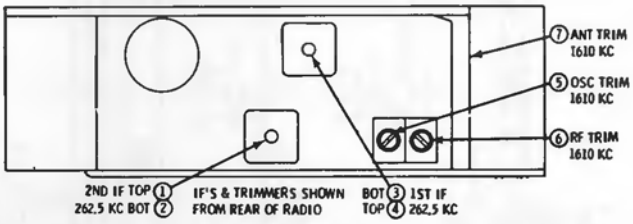

ALIGNMENT POINTS LOCATION DETAIL

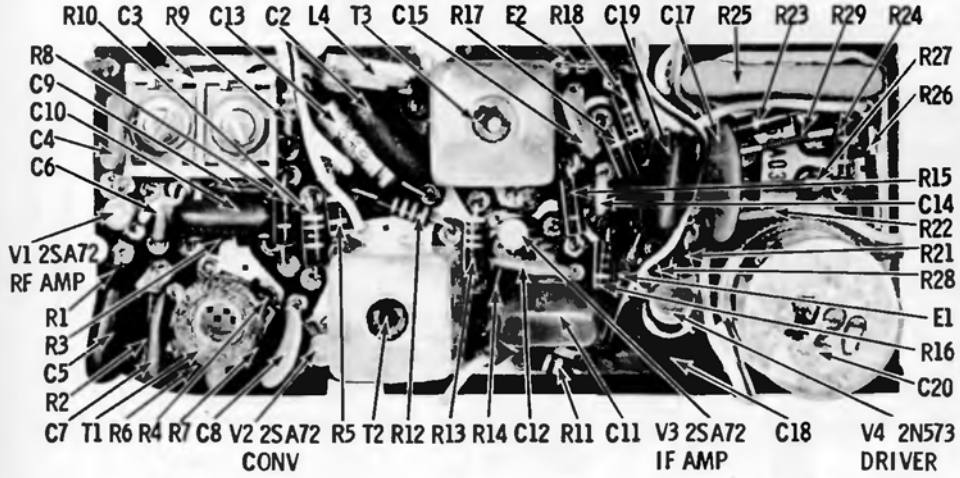

MODELS 3TME, 3TMF & 3TMY PARTS LOCATION

DUMMY ANTENNA

MOTOROLA	FORD
3TME	C3GA-18806
3TMF	C3AA-18806
3TMY	C3YA-18806

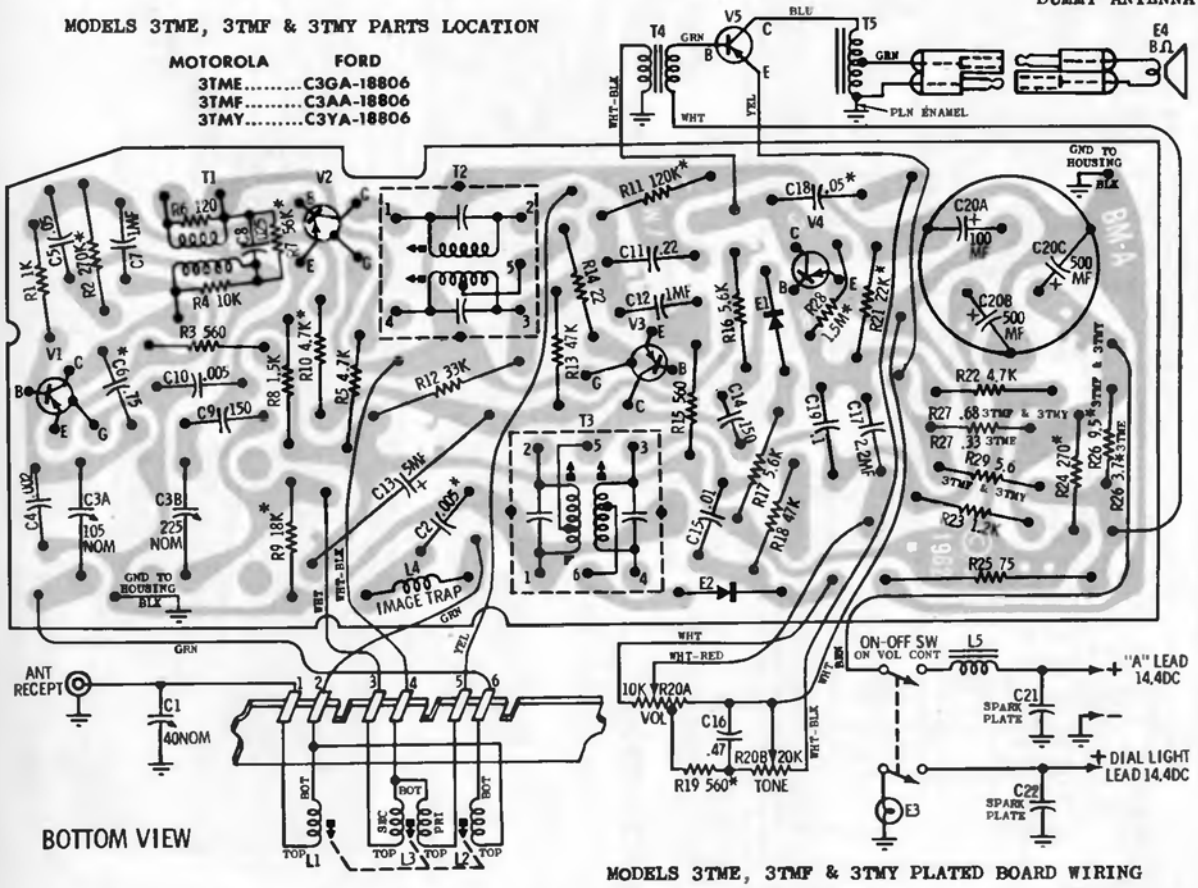

MODELS 3TME, 3TMF & 3TMY PLATED BOARD WIRING

COMPONENTS SHOWN ARE ACTUALLY LOCATED ON OPPOSITE SIDE-COMPONENT SIDE OF PLATING CONTAINS GROUND CONNECTIONS ONLY-SEE PLATED CHASSIS BOARD DESCRIPTION

MOTOROLA

MOTOROLA 3TMR
AMERICAN MOTORS 8991142

(Continued on the next page at right)

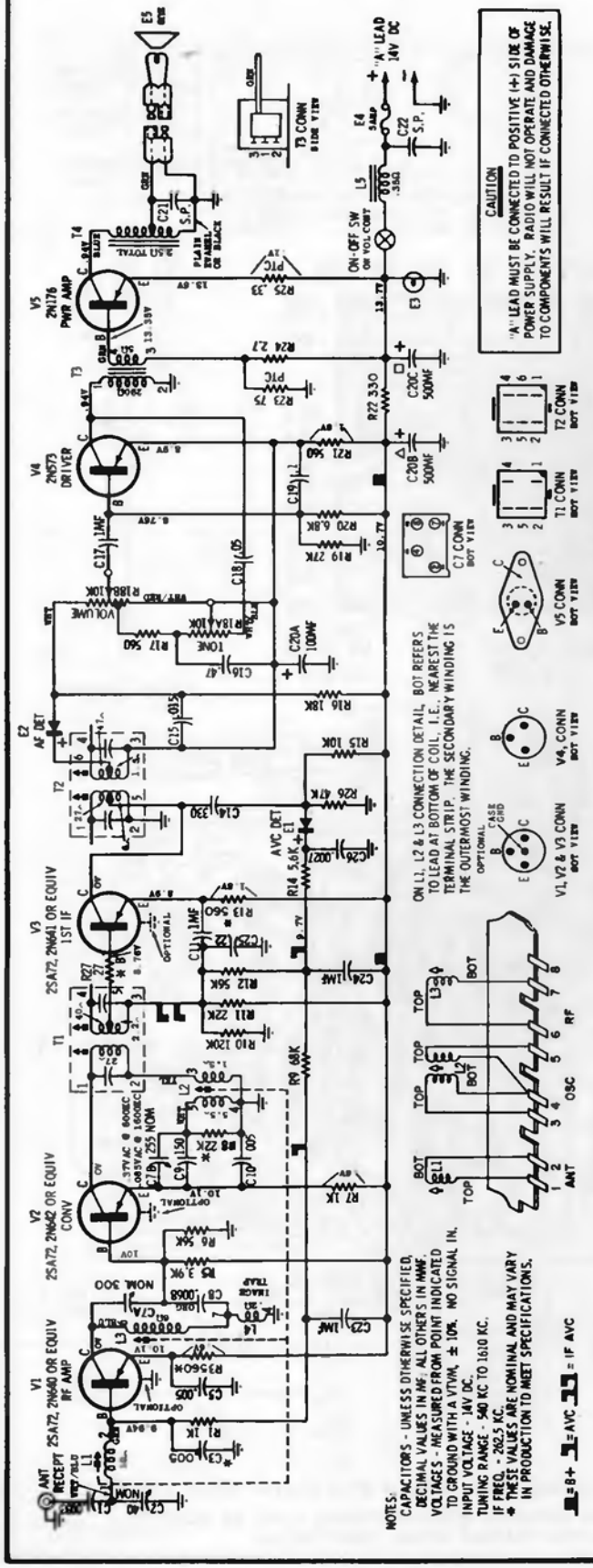

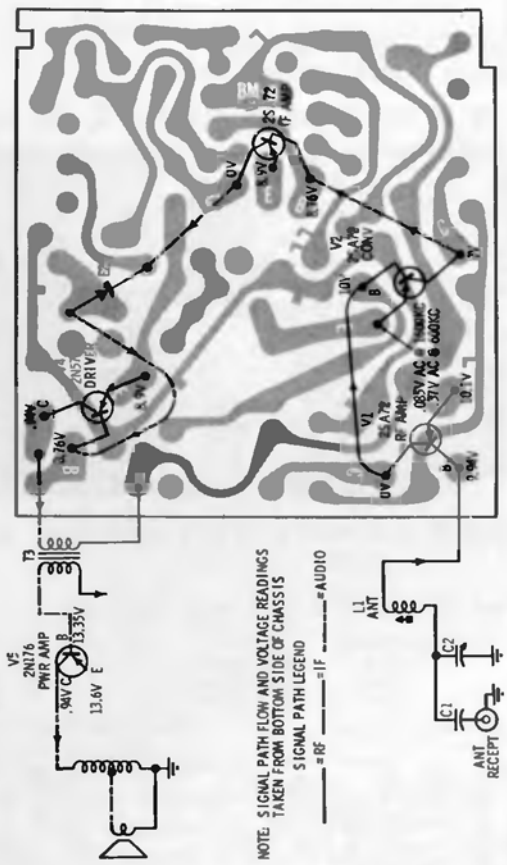

SIGNAL PATH & VOLTAGE DETAIL

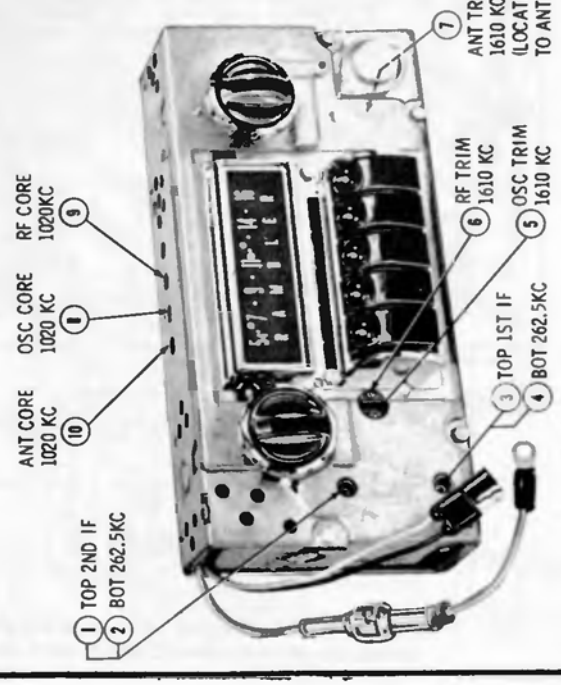

ALIGNMENT POINTS LOCATION DETAIL

MOTOROLA

MOTOROLA 3TMR
AMERICAN MOTORS 8991142

(Continued from preceding page, at left)

PLATED CHASSIS BOARD DESCRIPTION - Motorola's placir chassis has plating on both sides of the chassis board. The exposed side contains the actual circuit connections while the plating on the component side of the chassis board provides a convenient chassis B- return for components and circuit wiring. Plating on the component side also provides shielding between the top and bottom of the unit.

All B- connections are carried through the placir chassis in multiple paths to the B- side. This insures a good low resistance return path. Two separate and independent paths are provided to ground.

TO SERVICE PLATED CHASSIS BOARD - To remove the plated chassis from the radio housing, unsolder the plated chassis ground wire from chassis housing. Release the chassis board locking spring and carefully lift chassis board out of housing. Position the chassis board vertically with respect to radio housing for servicing.

After servicing is performed, reinstall plated chassis board. Make certain chassis board is properly placed in the grooves of the chassis retaining brackets and locked in position with the chassis board locking spring. Re-solder ground lead.

TRANSISTOR REPLACEMENT - When replacing a transistor (other than the power transistor), grasp the transistor leads (between transistor body and plated chassis board) with a pair of long nose pliers to prevent excessive heating of transistor body during soldering operation.

TO SET PUSHBUTTONS

Allow receiver to warm up for fifteen minutes. Pull up on push buttons to unlock. Push down firmly on pushbuttons to lock after station has been selected.

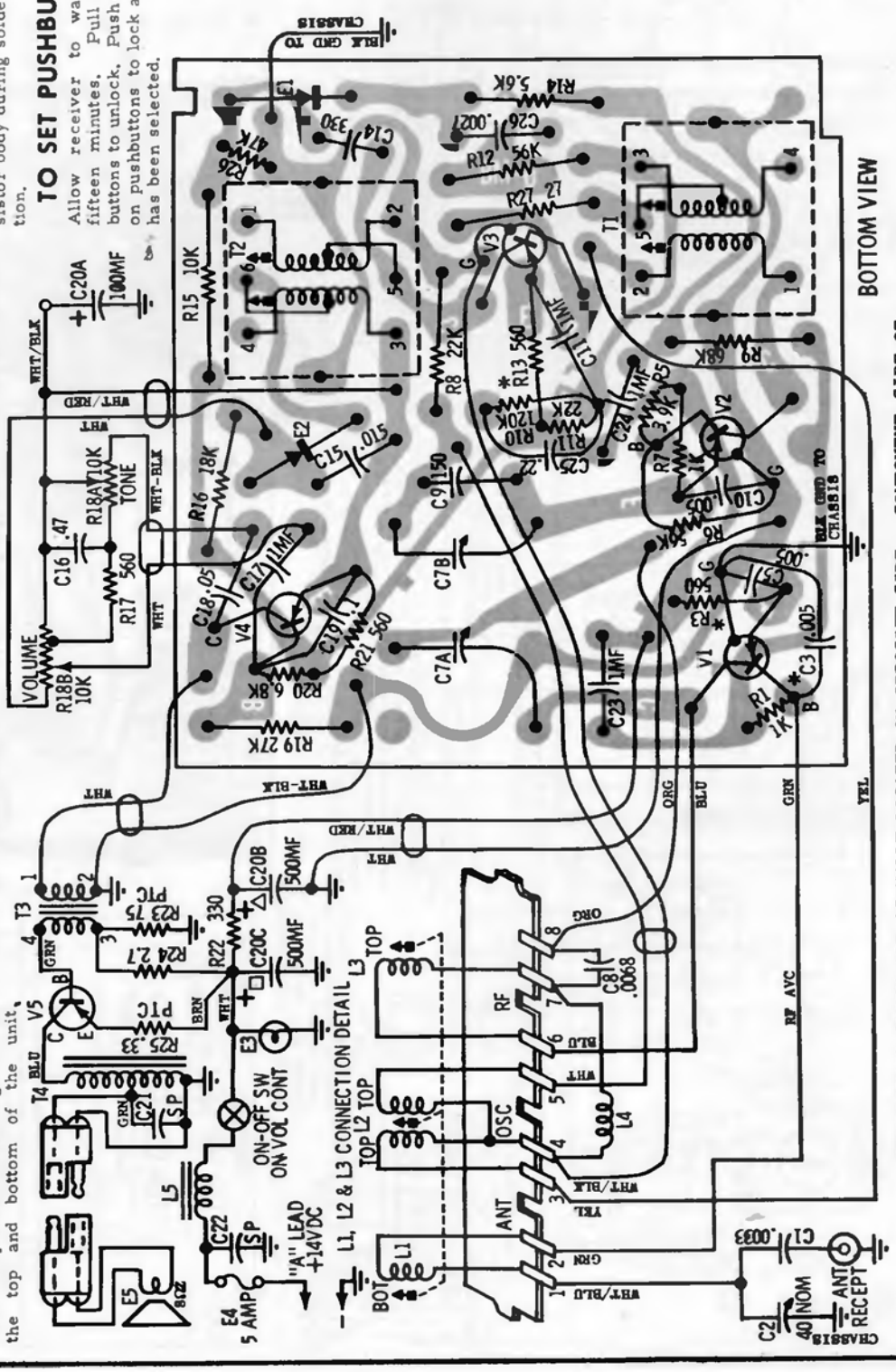

MOTOROLA

Models CA63 and CRA63

This material is also applicable to Models CYA63 and OEA63 which are practically identical.

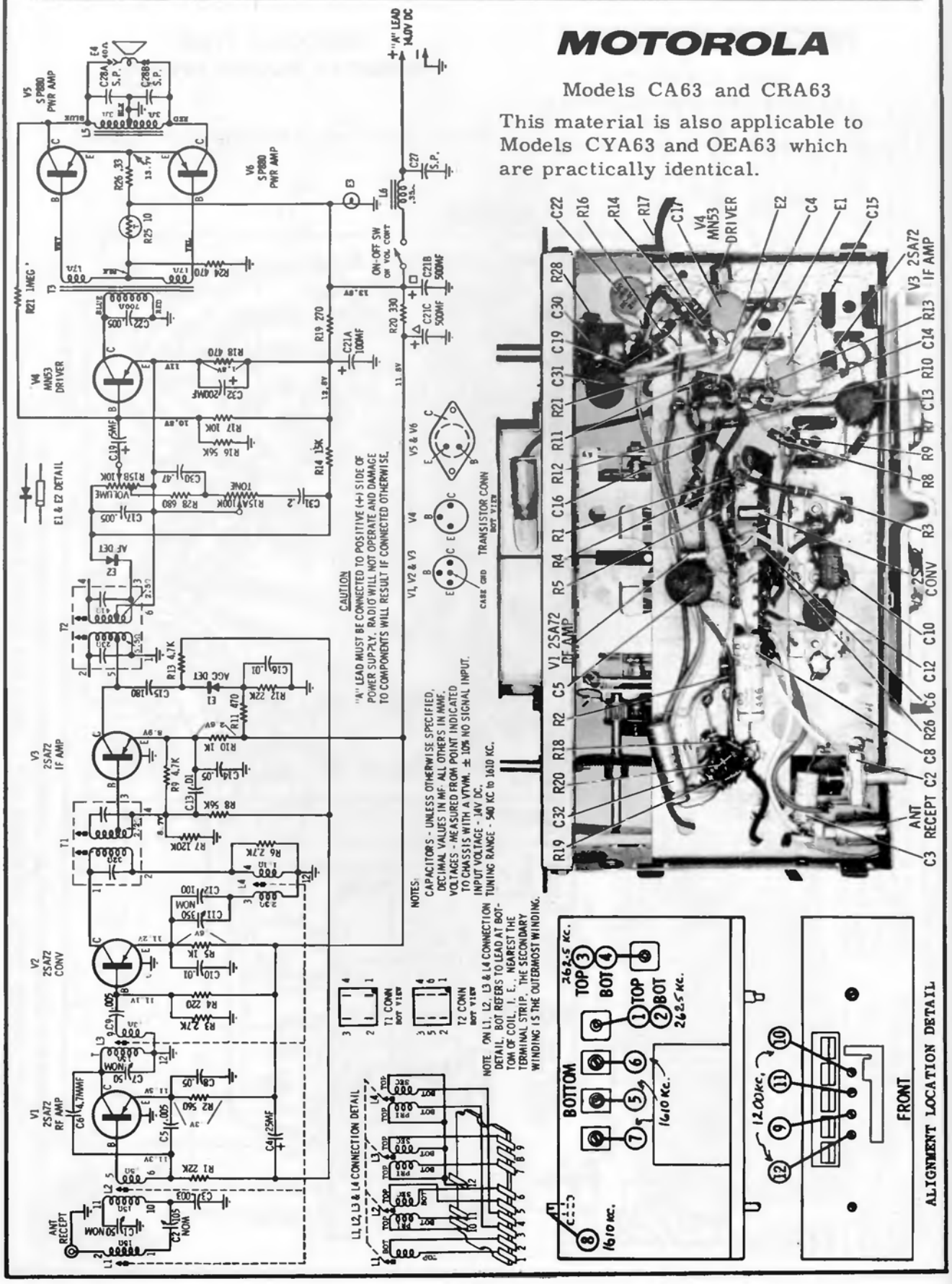

MOTOROLA

auto radio CRM63, CYM63

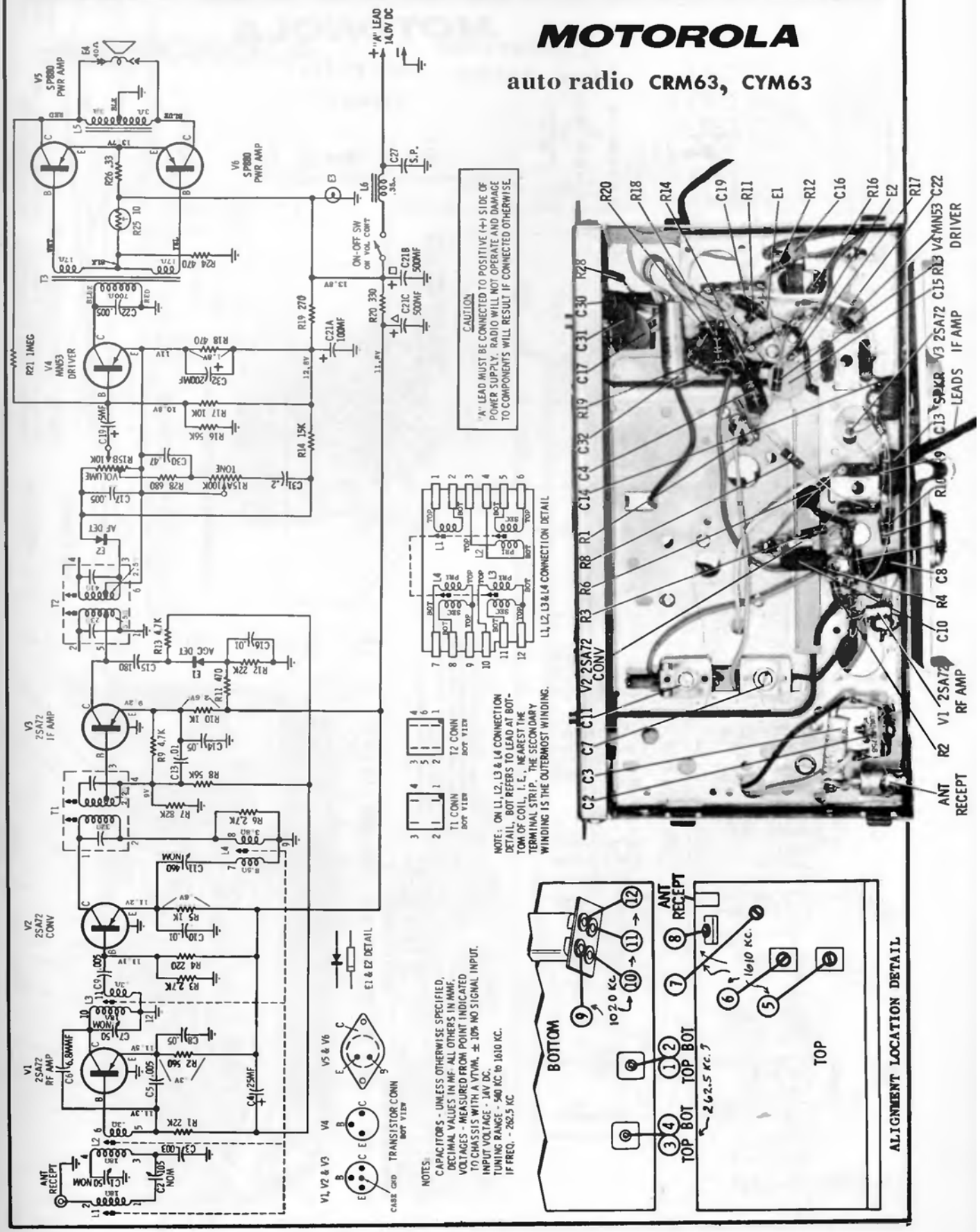

MOTOROLA

auto radio

VWM63

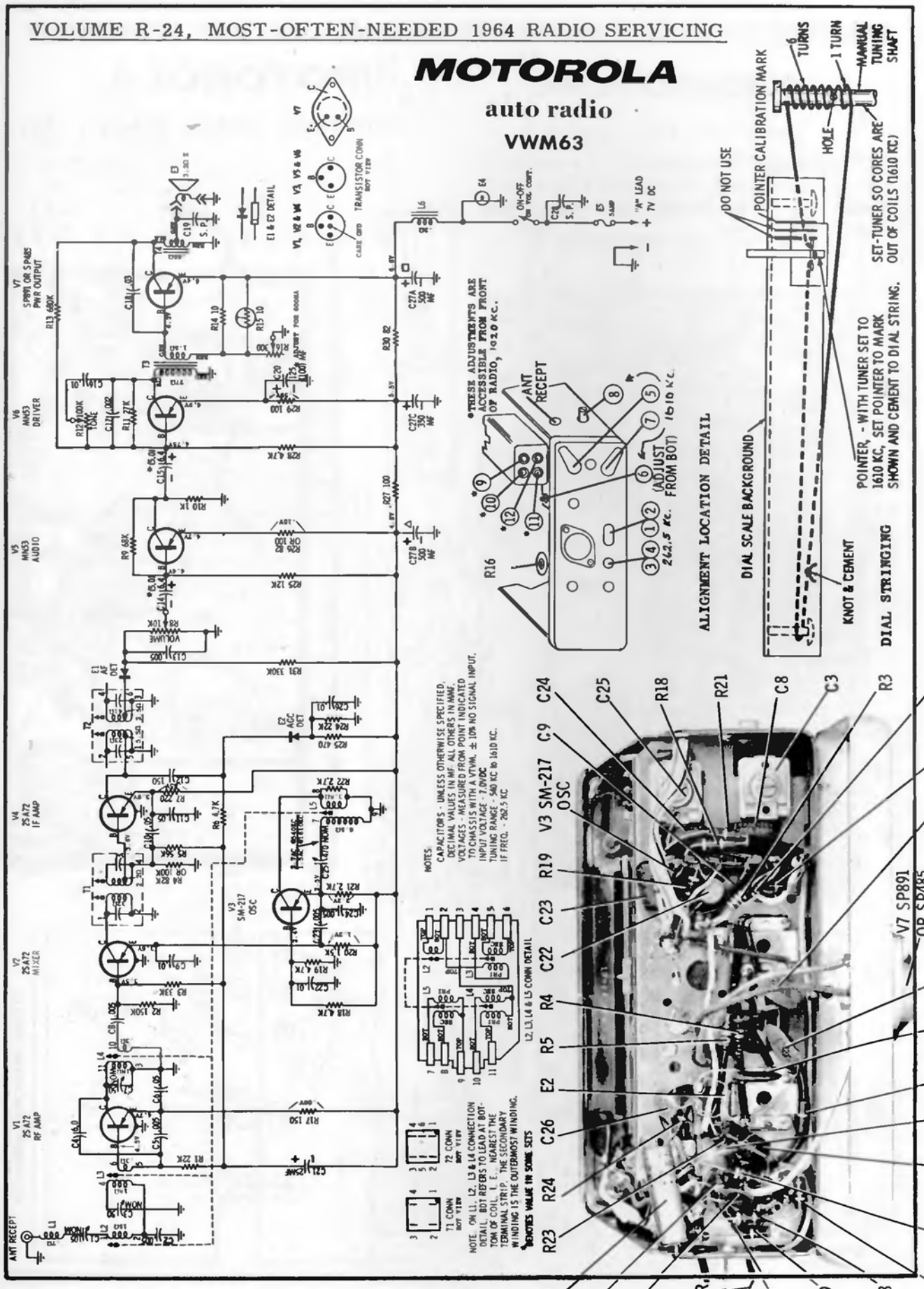

MOTOROLA

auto radio

VWA63

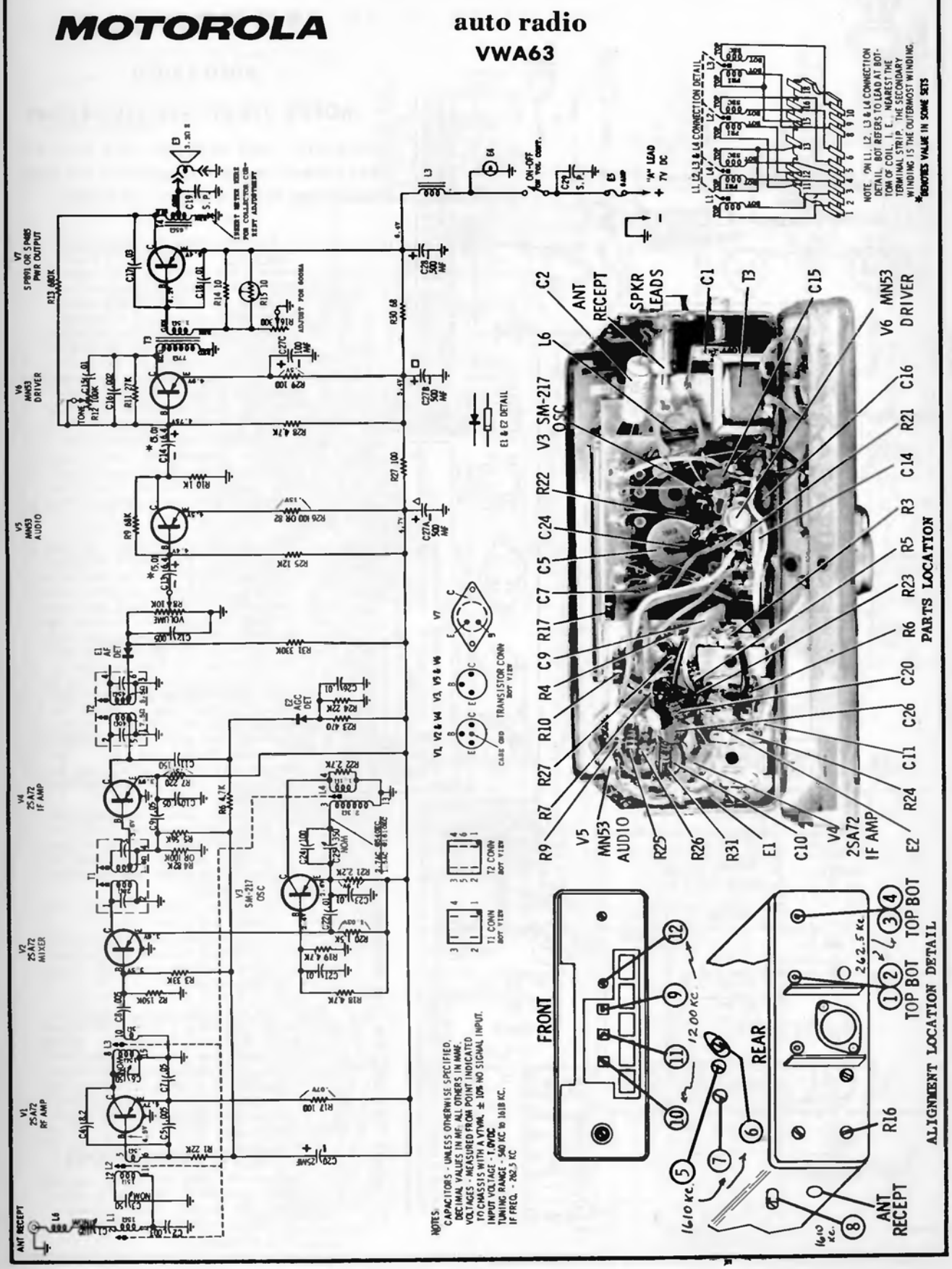

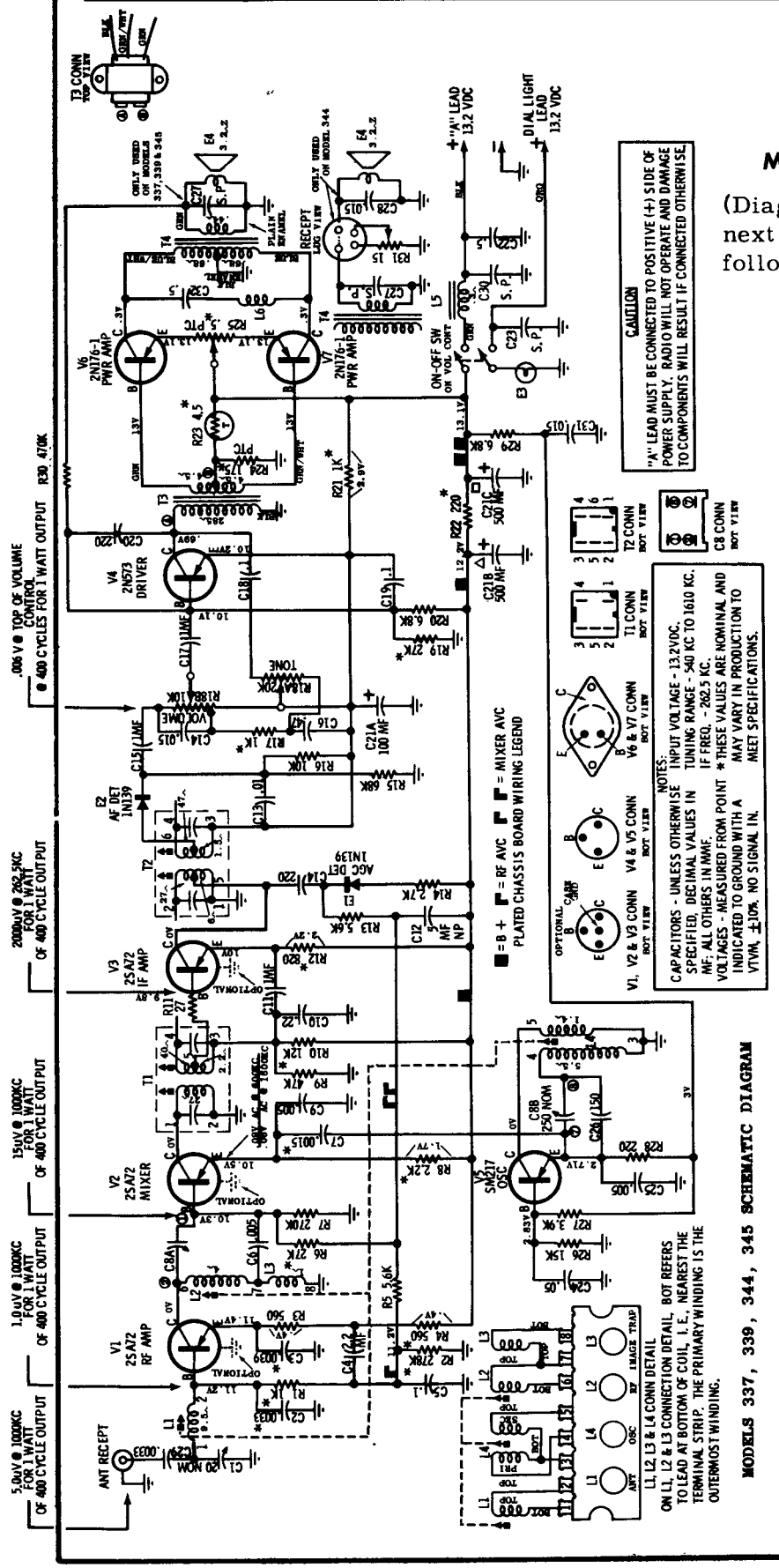

MOTOROLA

auto radio

MOPAR 216,217,337,339,344,345

(Diagrams and service data on the next three pages, alignment on page following; total 4 pages of data)

PLATED CHASSIS BOARD DESCRIPTION - Motorola's PLAcir chassis has plating on both sides of the chassis board. The exposed side contains the actual circuit connections while the plating on the component side of the chassis board provides a convenient chassis B- return for components and circuit wiring. Plating on the component side also provides shielding between the top and bottom of the unit similar to a metal chassis which incorporates hand wiring.

All B- connections are carried through the PLAcir chassis in multiple paths to the B- side. This insures a good low resistance return path.

PLATED CHASSIS BOARD REMOVAL - To remove the plated chassis completely from the radio housing, unsolder the plated chassis mounting bracket, bend the ears straight and carefully remove the bracket from chassis board. Lift plated board until its tabs are free; carefully remove from housing.

After servicing is performed, reinstall plated chassis board, engaging 4 board tabs into slots in housing; then attach plated chassis mounting bracket into place. It is important, at this point, that the following leads are dressed correctly.

A. Make certain the pilot light leads and transistor leads are dressed above the pilot light socket; do not allow them to lie between the pilot light and light shild.

B. Dress volume control leads away from filter choke.

C. Dress antenna lead along edge of plated chassis as far away from oscillator and RF trimmer as possible.

TRANSISTOR REPLACEMENT - When replacing a transistor (other than a power transistor), grasp the transistor leads (between transistor body and plated chassis board) with a pair of long nose pliers to prevent excessive heating of transistor body during soldering operation.

TO SET PUSHBUTTONS

Allow receiver to warm up for fifteen minutes. Pull out on pushbutton to unlock. Push pushbutton in firmly to lock after station has been selected.

MOTOROLA Models 216, 217, 337, 339, 344, 345

(Continued from preceding page, other service data and alignment on the next two pages)

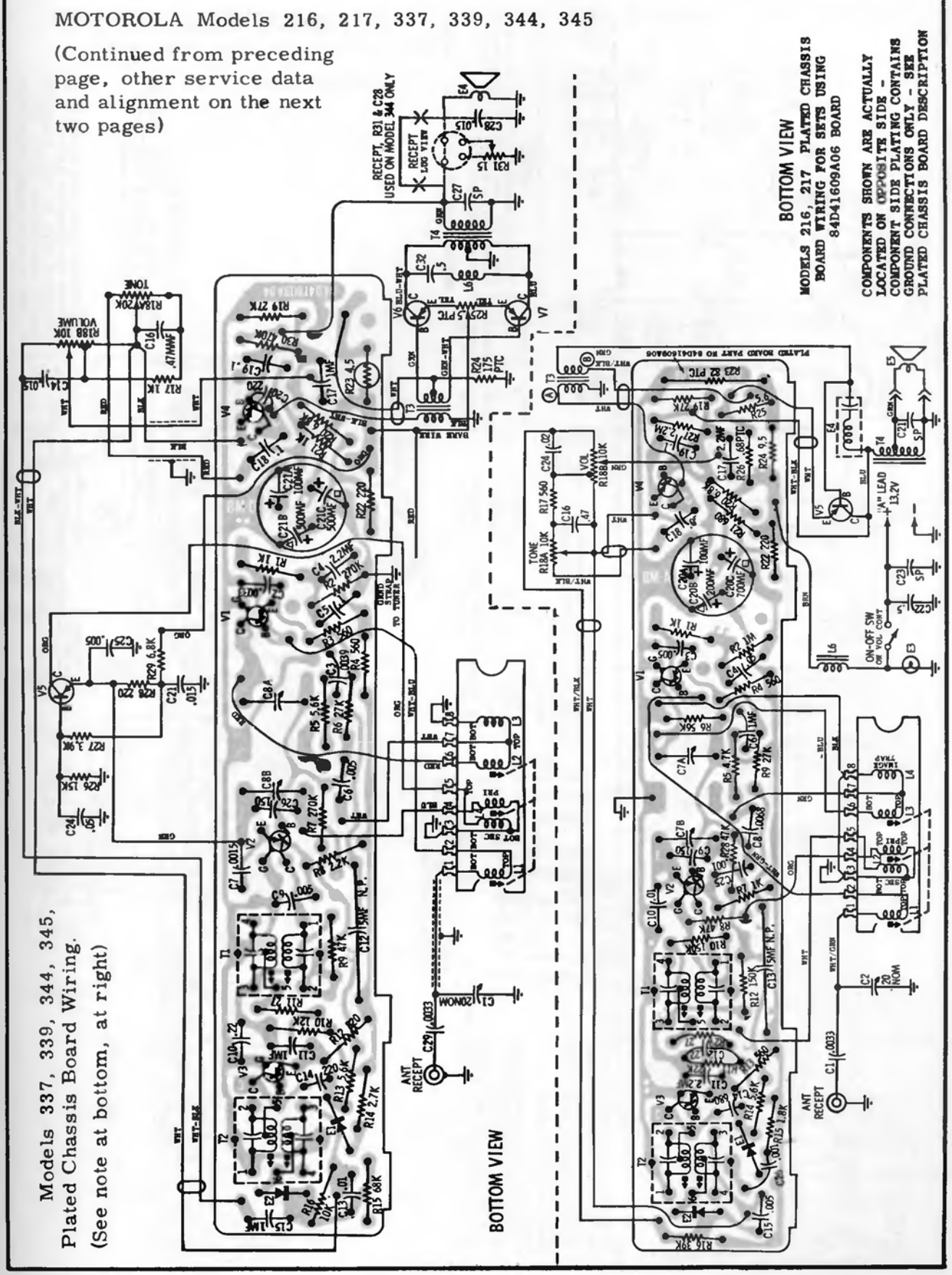

Models 337, 339, 344, 345, Plated Chassis Board Wiring. (See note at bottom, at right)

MOTOROLA Models 216, 217, 337, 339, 344, 345

(Continued)

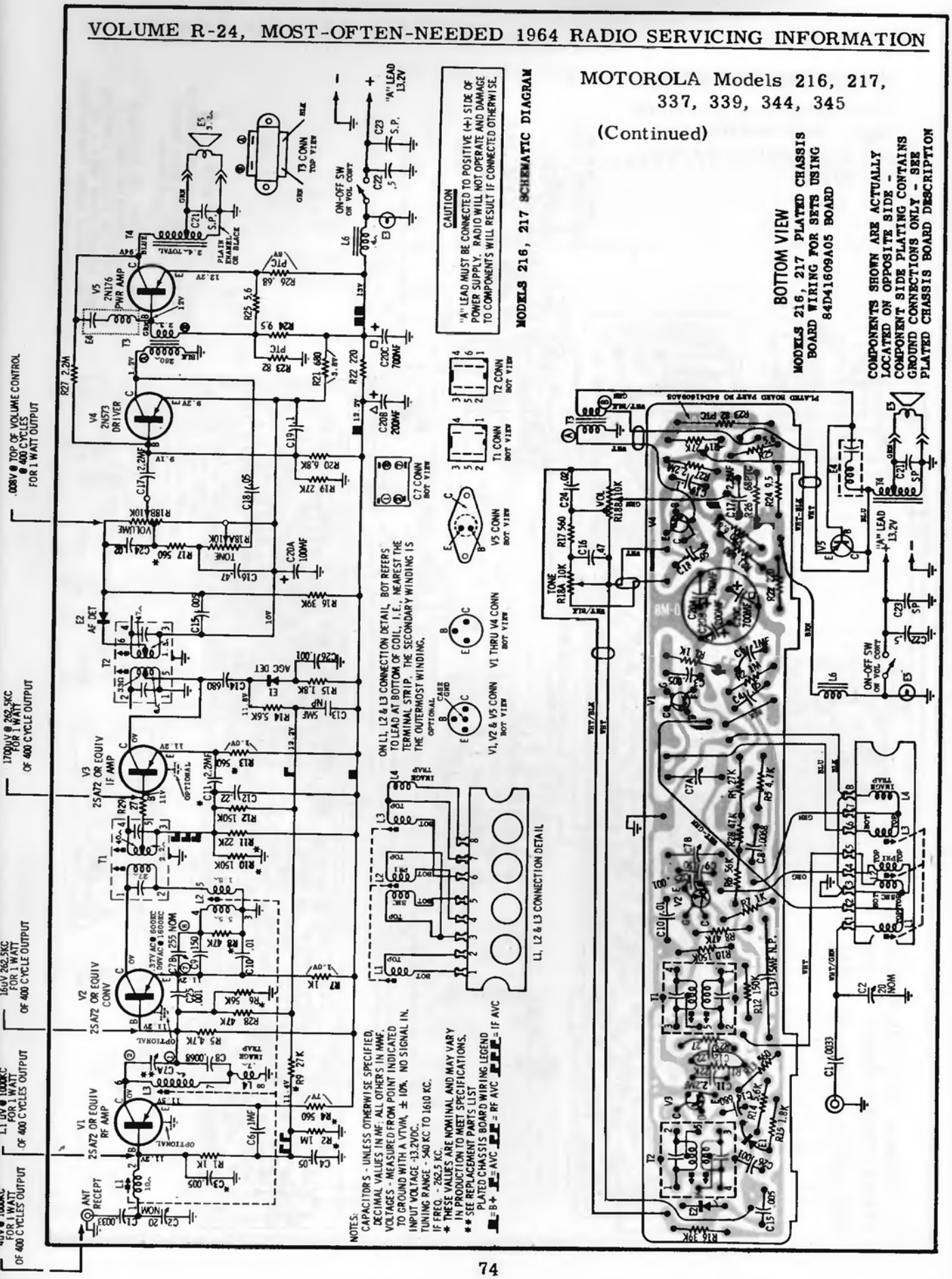

MOTOROLA Models 216, 217, 337, 339, 344, 345, Alignment Data, Continued

ALIGNMENT

Connect an output meter across the speaker voice coil. Set volume to maximum and tone to high. Attenuate signal generator output to maintain 1.79 volts on output meter at all times to prevent overloading the receiver.

STEP	GENERATOR CONNECTION	GENERATOR FREQUENCY (400 cycle mod)	TUNER SET TO	ADJUST	REMARKS
IF ALIGNMENT					
1.	Ant recept thru .1 mf capacitor & ground	262.5 Kc	Hi end stop	1, 2, 3 & 4	Adjust for maximum.
RF ALIGNMENT					
2.	Ant recept thru dummy antenna (see Figure)	1610 Kc	Hi end stop	5, 6 & 7	Adjust for maximum.
NOTE: Do not perform steps 3, 4, 5 & 6 unless the tuner has been tampered with or components have been replaced. Before proceeding with step 3, back tuning cores (of ant, RF & osc only) out of coils to eliminate their effect on the trimmer adjustments.					
3.	Ant recept thru dummy antenna (see Figure)	1610 Kc	Hi end stop	5, 6 & 7	Adjust for maximum.
4.	"	1020 Kc	Tuner carriage 9/16" in from hi end stop	8, 9 & 10	Adjust for maximum, using alignment tool Motorola Part No. 66A76278.
5.	"	1610 Kc	Hi end stop	5, 6 & 7	Adjust for maximum.
6.	Repeat steps 4 & 5 until no further increase, then cement cores in place. Step 5 should be last step.				
ANTENNA TRIMMER					
7.			Weak station around 1400 Kc	7	With radio installed in car and antenna fully extended, peak antenna trimmer for maximum.

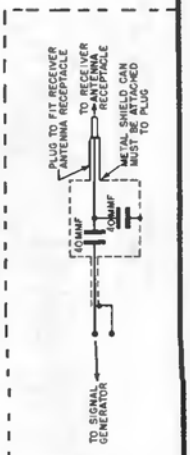

DUMMY ANTENNA

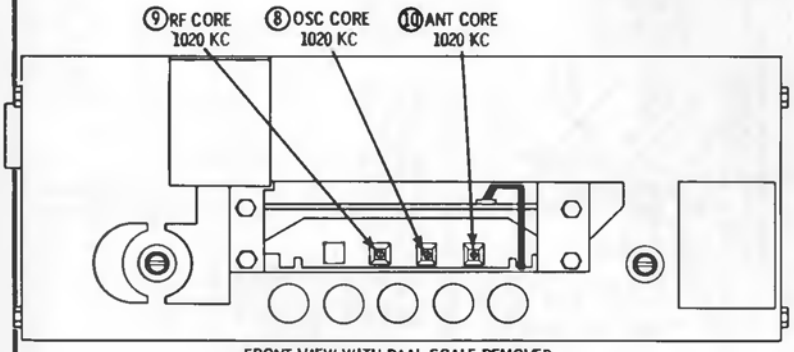

FRONT VIEW WITH DIAL SCALE REMOVED

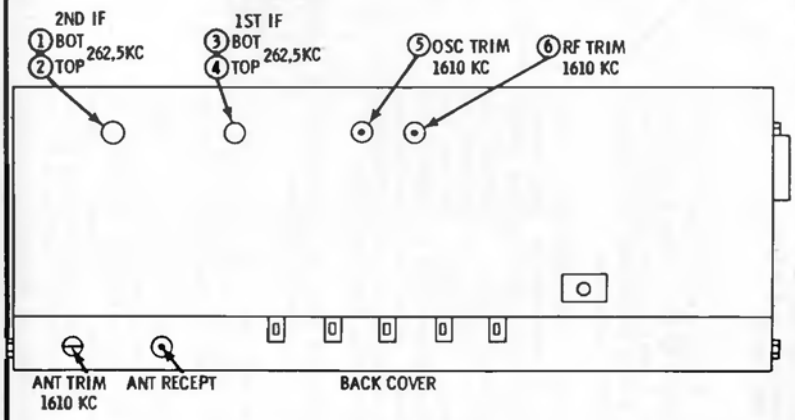

ALIGNMENT LOCATION DETAIL

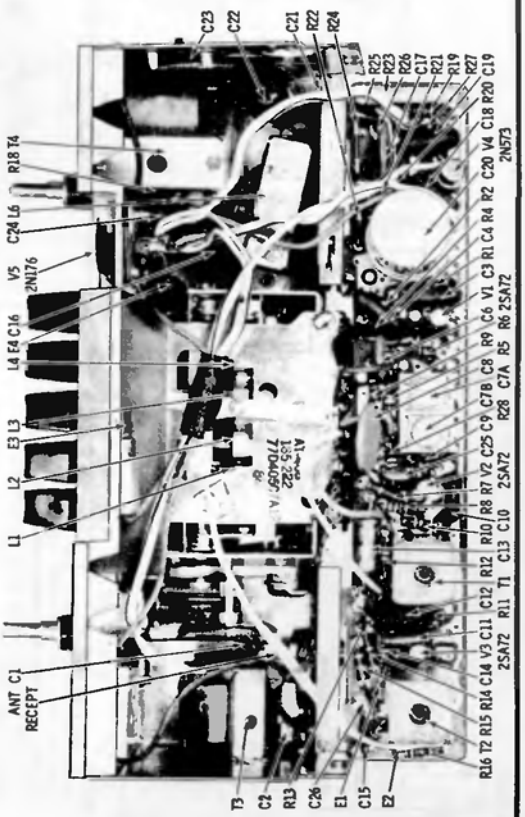

MODELS 216, 217 PARTS LOCATION

MOTOROLA

Auto Radio Model 290T

(Continued on the next page, at right)

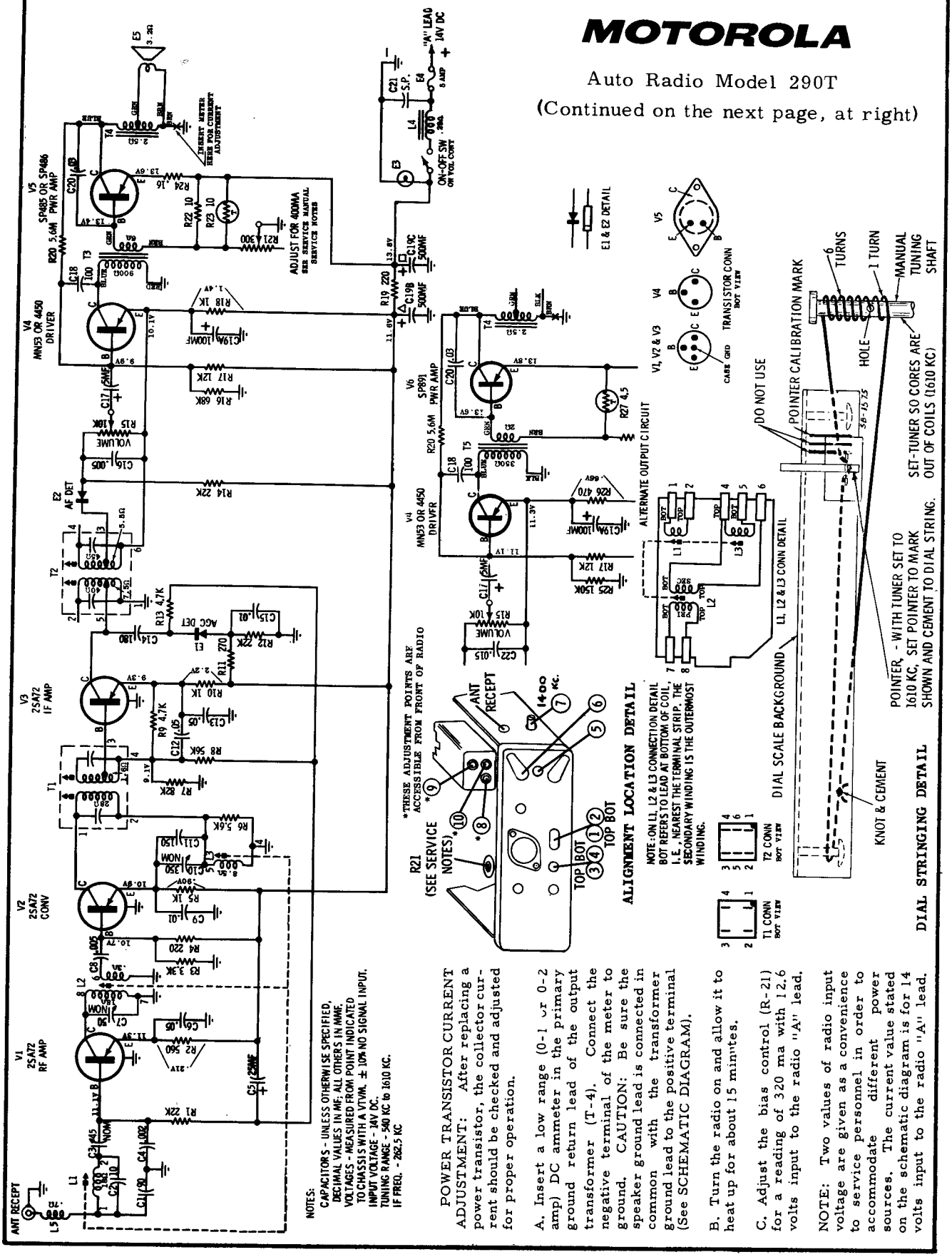

POWER TRANSISTOR CURRENT ADJUSTMENT: After replacing a power transistor, the collector current should be checked and adjusted for proper operation.

A. Insert a low range (0-1 or 0-2 amp) DC ammeter in the primary ground return lead of the output transformer (T-4). Connect the negative terminal of the meter to ground. CAUTION: Be sure the speaker ground lead is connected in common with the transformer ground lead to the positive terminal (See SCHEMATIC DIAGRAM).

B. Turn the radio on and allow it to heat up for about 15 minutes.

C. Adjust the bias control (R-21) for a reading of 320 ma with 12.6 volts input to the radio "A" lead.

NOTE: Two values of radio input voltage are given as a convenience to service personnel in order to accommodate different power sources. The current value stated on the schematic diagram is for 14 volts input to the radio "A" lead.

MOTOROLA Auto Radio Model 290T (Continued from preceding page)

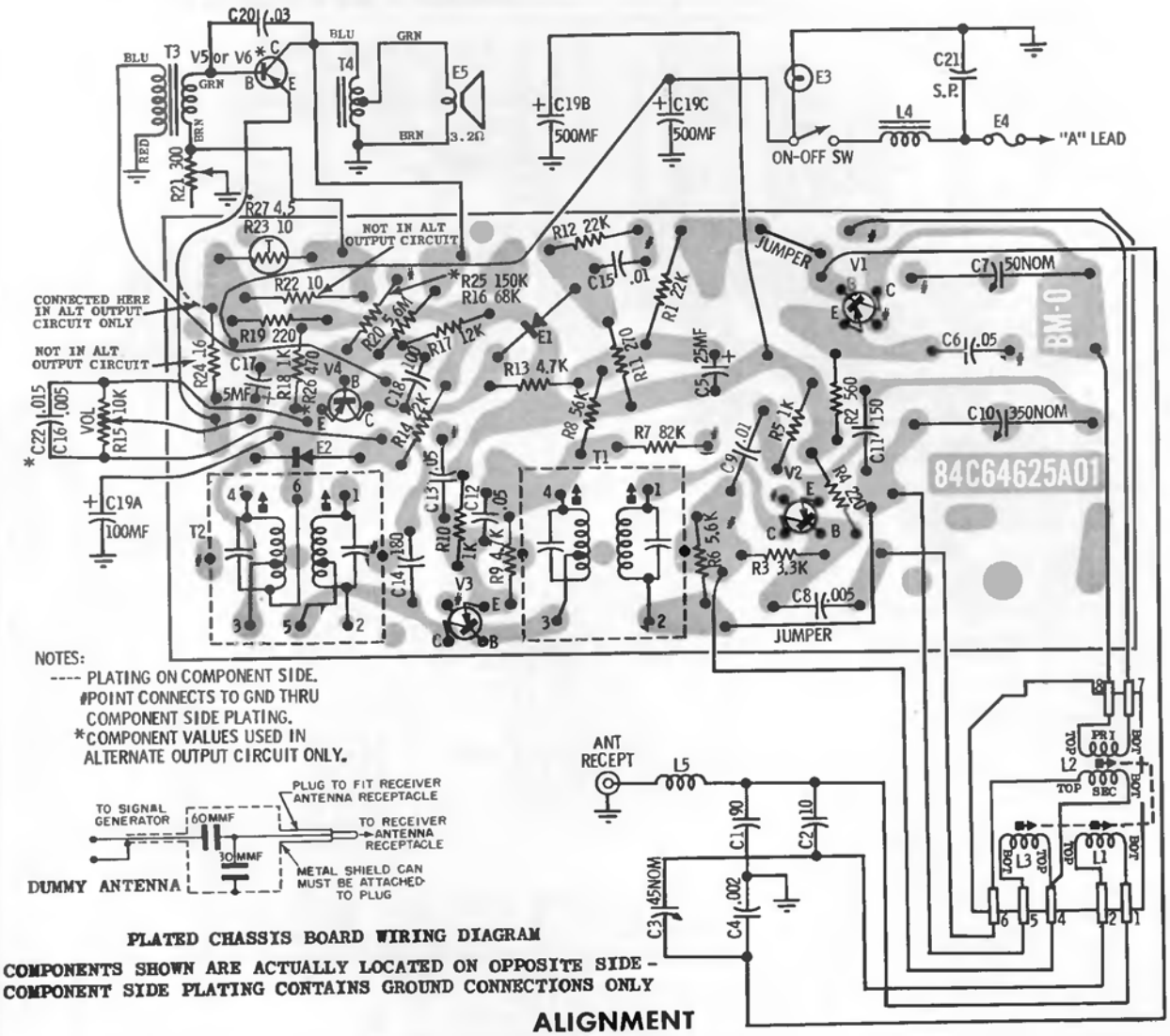

NOTES:
---- PLATING ON COMPONENT SIDE.
#POINT CONNECTS TO GND THRU COMPONENT SIDE PLATING.
*COMPONENT VALUES USED IN ALTERNATE OUTPUT CIRCUIT ONLY.

PLATED CHASSIS BOARD WIRING DIAGRAM

COMPONENTS SHOWN ARE ACTUALLY LOCATED ON OPPOSITE SIDE - COMPONENT SIDE PLATING CONTAINS GROUND CONNECTIONS ONLY

ALIGNMENT

Connect an output meter across the speaker voice coil. Set volume to maximum. Attenuate signal generator output to maintain 1 watt (1.79 volts across a 3.2 ohm load) on output meter at all times.

STEP	GENERATOR CONNECTION	GEN FREQ (400 cycle 30% mod)	TUNER SET TO	ADJUST	REMARKS
1.	To collector of RF amp thru .1mf & chassis	262.5Kc	Hi end stop	1, 2, 3 & 4	Adjust for maximum
2.	Ant recept thru dummy (see figure)	1610Kc	Hi end stop	5, 6 & 7	Adjust for maximum
3.	Ant recept thru dummy (see figure)	1610Kc	Hi end stop	5, 6 & 7	Adjust for maximum
4.	"	1020Kc	Tuner carriage .298" from Hi end stop	8, 9 & 10	Adjust for maximum
5.	"	1610Kc	Hi end stop	5, 6 & 7	Adjust for maximum
6.	Repeat steps 4 and 5 until no further increase; step 5 should be last step. Then, cement core screws in place.				

MOTOROLA

Auto Radio Model 323T

(Continued on next page, at right)

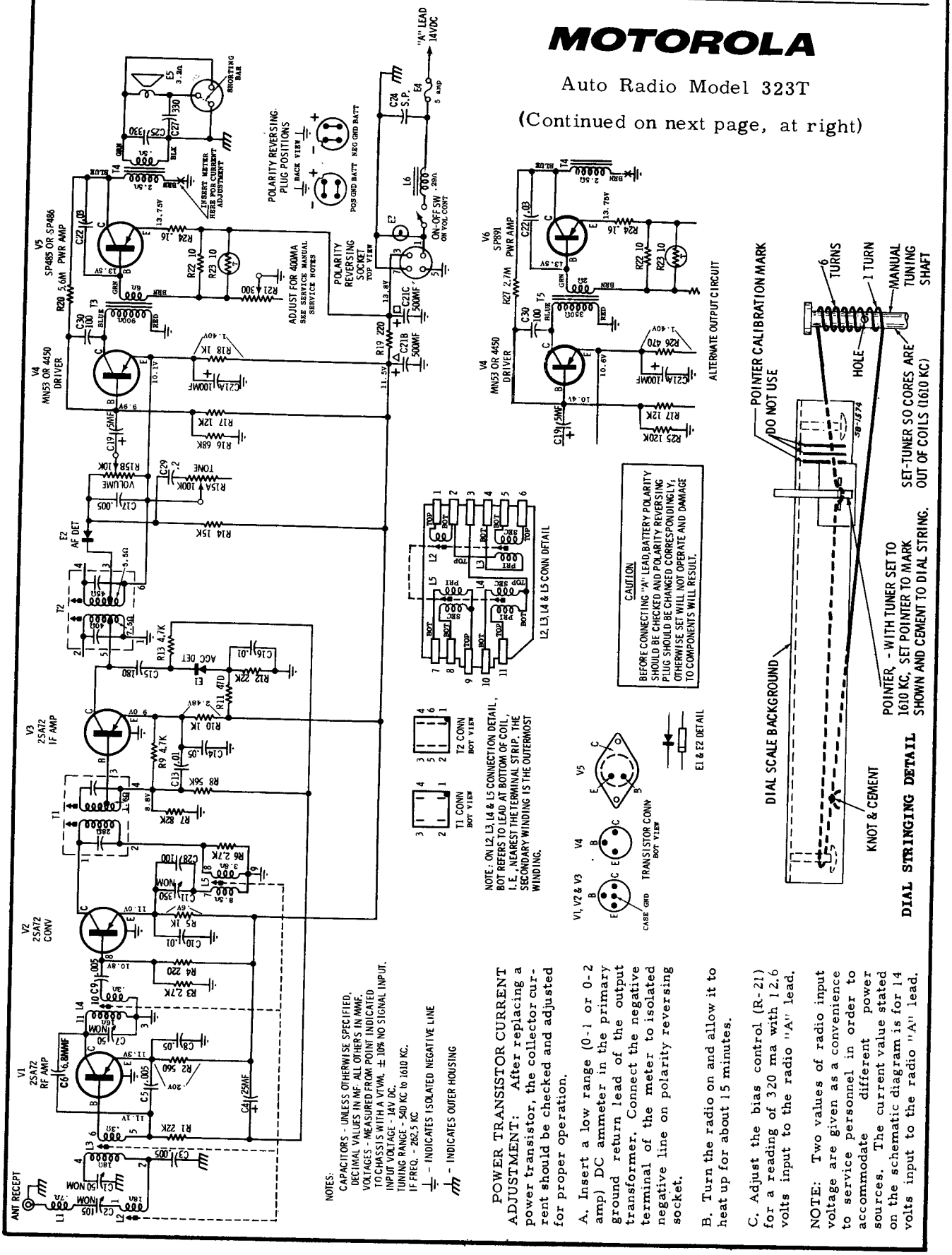

POWER TRANSISTOR CURRENT ADJUSTMENT: After replacing a power transistor, the collector current should be checked and adjusted for proper operation.

A. Insert a low range (0-1 or 0-2 amp) DC ammeter in the primary ground return lead of the output transformer. Connect the negative terminal of the meter to isolated negative line on polarity reversing socket.

B. Turn the radio on and allow it to heat up for about 15 minutes.

C. Adjust the bias control (R-21) for a reading of 320 ma with 12.6 volts input to the radio "A" lead.

NOTE: Two values of radio input voltage are given as a convenience to service personnel in order to accommodate different power sources. The current value stated on the schematic diagram is for 14 volts input to the radio "A" lead.

MOTOROLA Auto Radio Model 323T (Continued from preceding page)

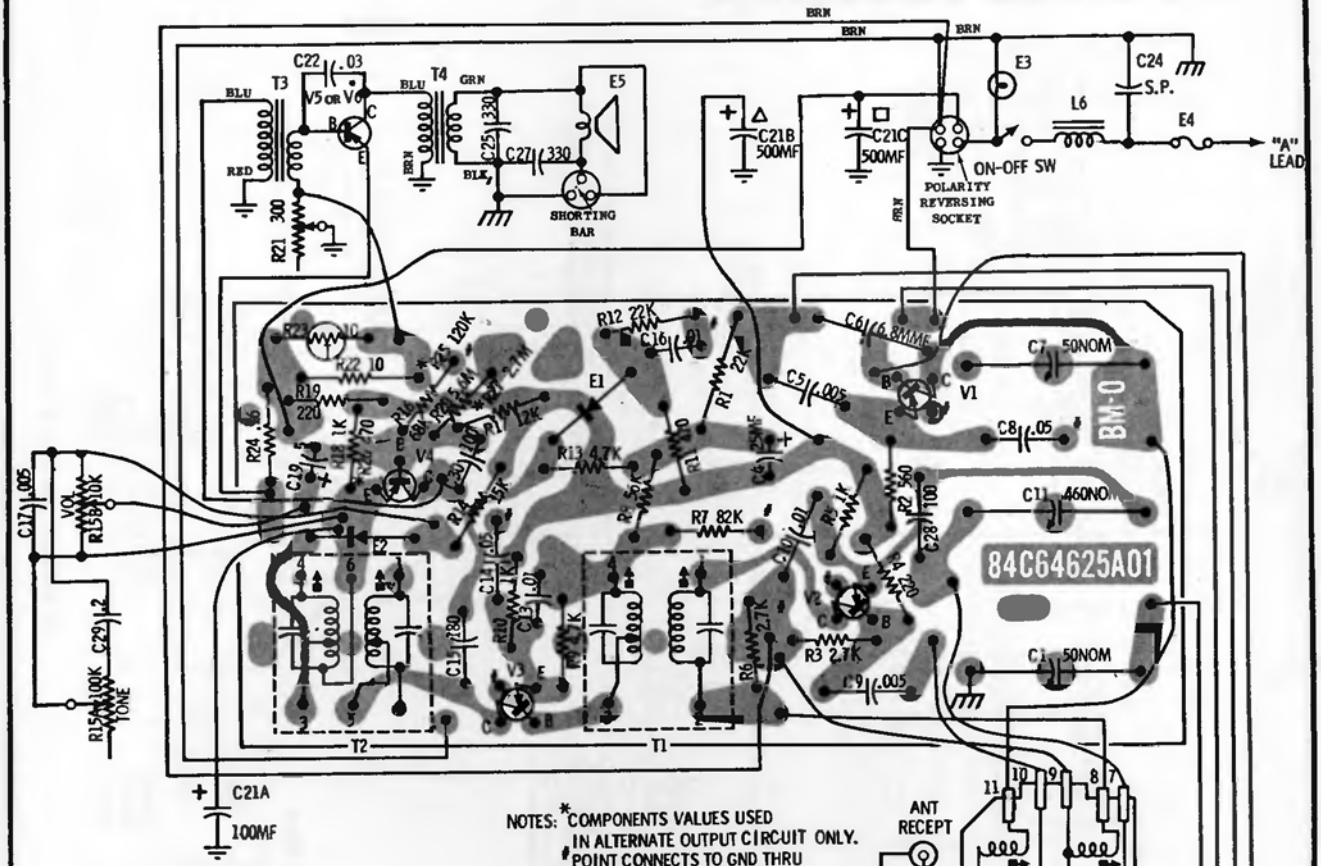

NOTES: *COMPONENTS VALUES USED IN ALTERNATE OUTPUT CIRCUIT ONLY.
#POINT CONNECTS TO GND THRU COMPONENT SIDE PLATING.

auto radio

323T

PLATED CHASSIS BOARD WIRING DIAGRAM

COMPONENTS SHOWN ARE ACTUALLY LOCATED ON OPPOSITE SIDE – COMPONENT SIDE PLATING CONTAINS GROUND CONNECTIONS ONLY

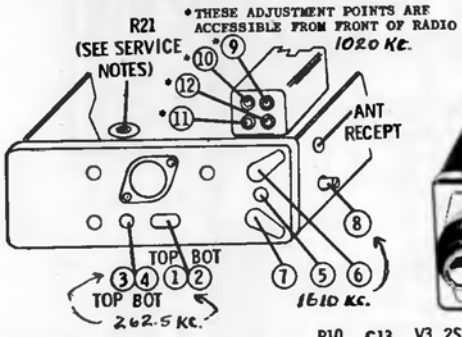

ALIGNMENT LOCATION DETAIL

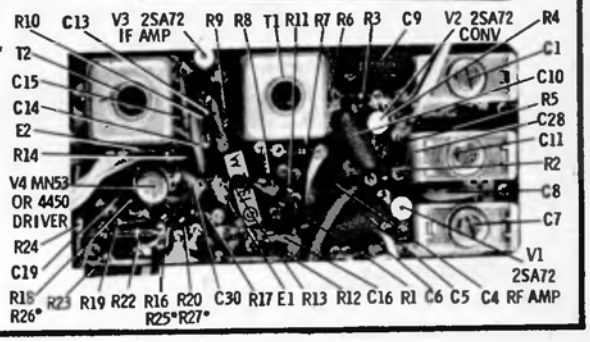

* SEE ALTERNATE OUTPUT CIRCUIT ON SCHEMATIC DIAGRAM

Make certain the "A" lead is connected properly to power source i. e., check position of polarity reversing plug, otherwise, damage to receiver may result.

When replacing a power output transistor, remember to use the transistor specified in the parts list; coat both sides of the transistor insulator with DC-4 grease (Motorola Part No. 11M490487) and securely tighten the transistor mounting screws. When replacing all other transistors, use long-nose pliers as a heat sink, i. e., grasp transistor leads close to transistor base with the pliers to dissipate heat while soldering.

The plated chassis used in this receiver has plating on both sides; the exposed side (opposite components) contains the actual circuitry while the plating on the component side contains B- points only.

MOTOROLA

auto radio

413T

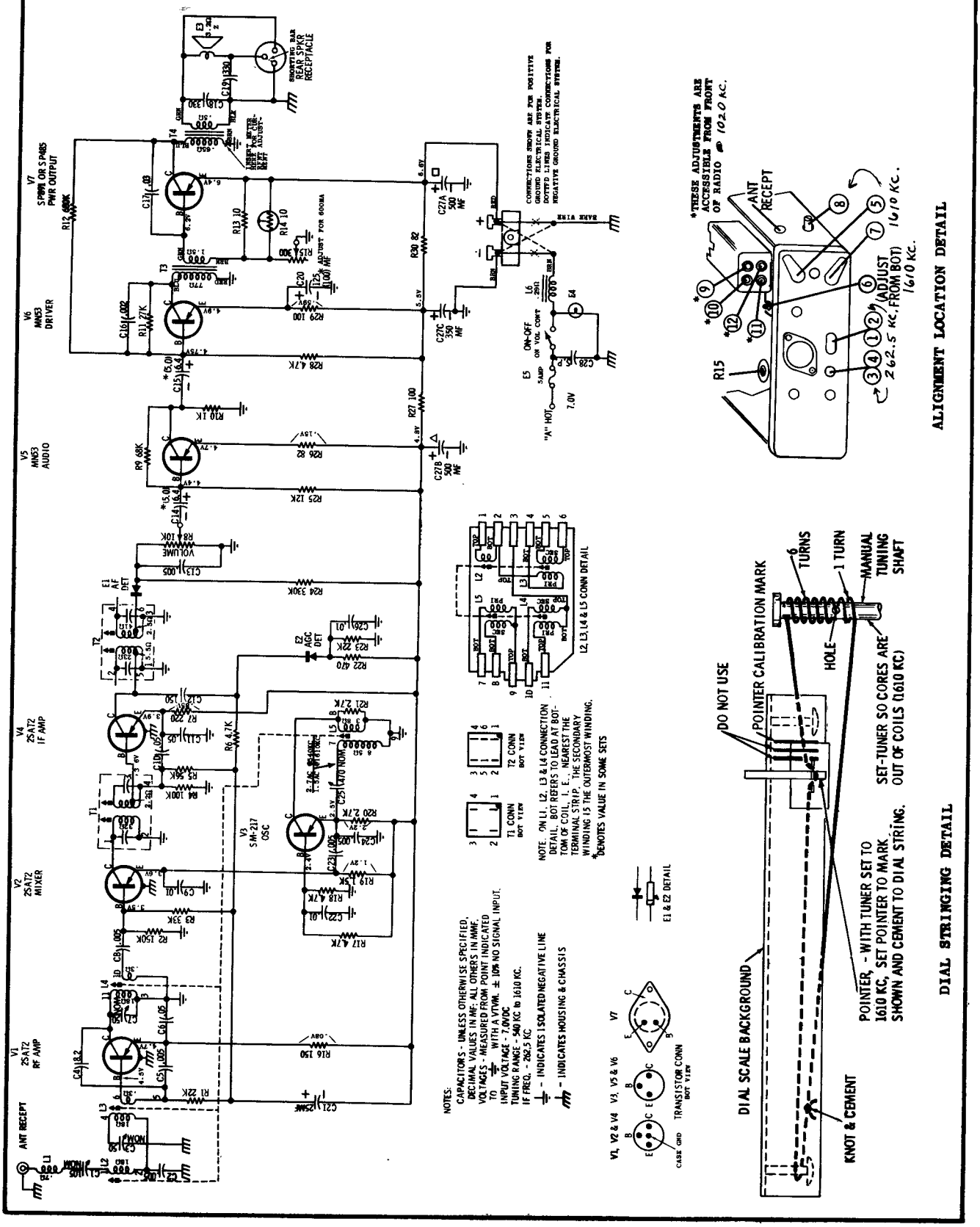

MOTOROLA

MODEL CX2
CHASSIS HS-6110

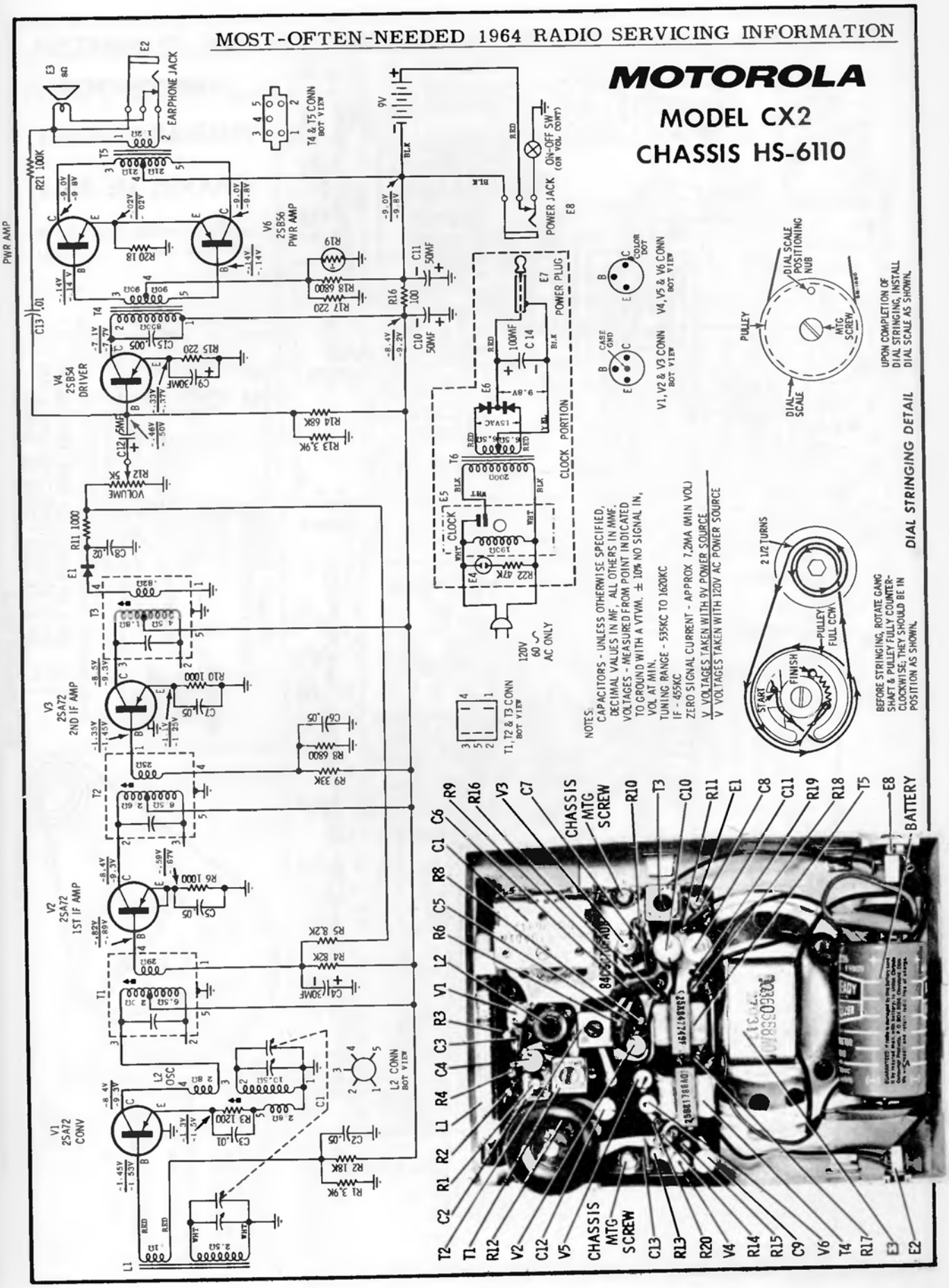

NOTE: C15, R5, R21 ARE LOCATED ON BOTTOM OF CHASSIS

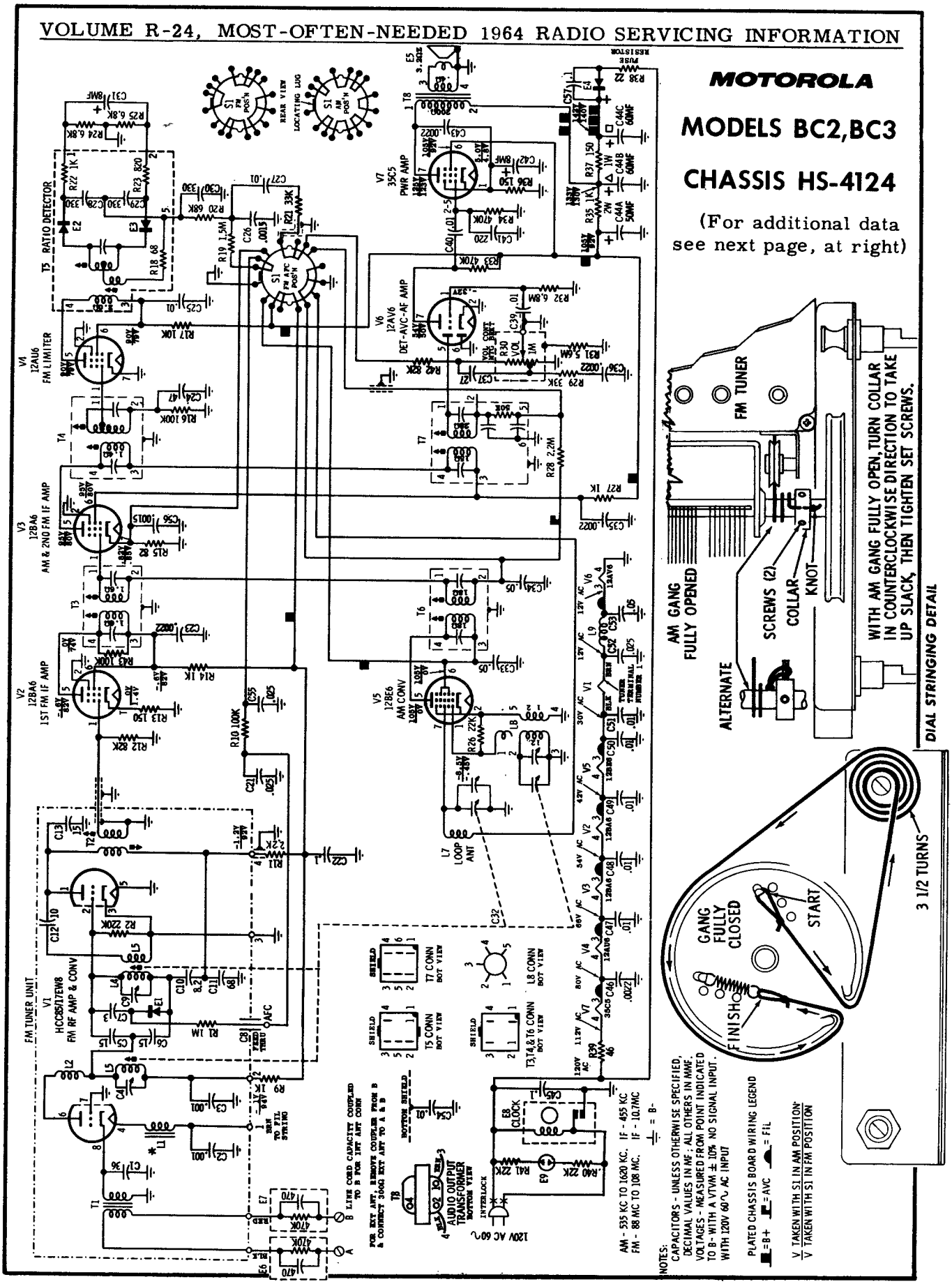
MOTOROLA
MODELS BC2,BC3
CHASSIS HS-4124
(For additional data see next page, at right)
FM TUNER
AM GANG FULLY OPENED
SCREWS (2)
COLLAR
KNOT
ALTERNATE
WITH AM GANG FULLY OPEN, TURN COLLAR IN COUNTERCLOCKWISE DIRECTION TO TAKE UP SLACK, THEN TIGHTEN SET SCREWS.
DIAL STRINGING DETAIL
GANG FULLY CLOSED
START
FINISH
3 1/2 TURNS
V1 HC085/17EW8 FM RF AMP & CONV
V2 12BA6 1ST FM IF AMP
V3 12BA6 AM & 2ND FM IF AMP
V4 12AU6 FM LIMITER
V5 12BE6 AM CONV
V6 12AV6 DET-AVC-AF AMP
V7 35C5 PWR AMP
T5 RATIO DETECTOR
L7 LOOP ANT
T8 AUDIO OUTPUT TRANSFORMER
E8 CLOCK
120V AC 60~
AM - 535 KC TO 1620 KC. IF - 455 KC
FM - 88 MC TO 108 MC. IF - 10.7MC
NOTES:
CAPACITORS - UNLESS OTHERWISE SPECIFIED, DECIMAL VALUES IN MF; ALL OTHERS IN MMF.
VOLTAGES - MEASURED FROM POINT INDICATED TO B- WITH A VTVM ± 10% NO SIGNAL INPUT. WITH 120V 60~ AC INPUT
PLATED CHASSIS BOARD WIRING LEGEND
=B+ =AVC = FIL
V TAKEN WITH S1 IN AM POSITION
V TAKEN WITH S1 IN FM POSITION

MOTOROLA

Models BC2, BC3, Chassis HS-4124 (Continued)

TO REMOVE CHASSIS FROM CABINET

1. Remove control knobs - pull straight off.

2. Remove 4 clutch head screws holding cabinet back to cabinet.

3. Unsolder leads to cabinet back.

4. Remove two screws holding chassis support channel.

5. Remove two screws that mount the AM gang bracket to cabinet.

6. Remove dial crystal from cabinet - reach in back of set and push down plastic tabs with fingers. Crystal should slip forward at top. Bottom of crystal has tabs which fit into cabinet slots. Care should be taken to avoid damage to tabs.

7. Remove dial pointer - pull straight out.

8. Remove 2 chassis mounting palnuts from front of radio.

9. Unsolder speaker leads.

10. Unsolder lead of bottom shield.

11. Slide AM loop out of slots inside cabinet.

12. Slide chassis out of cabinet. (Clock leads need not be disconnected to work on chassis.)

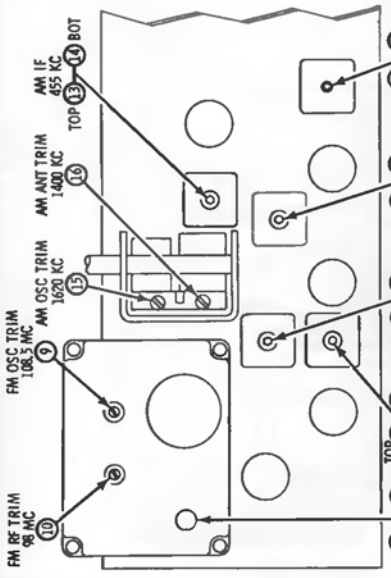

ALIGNMENT LOCATIONS

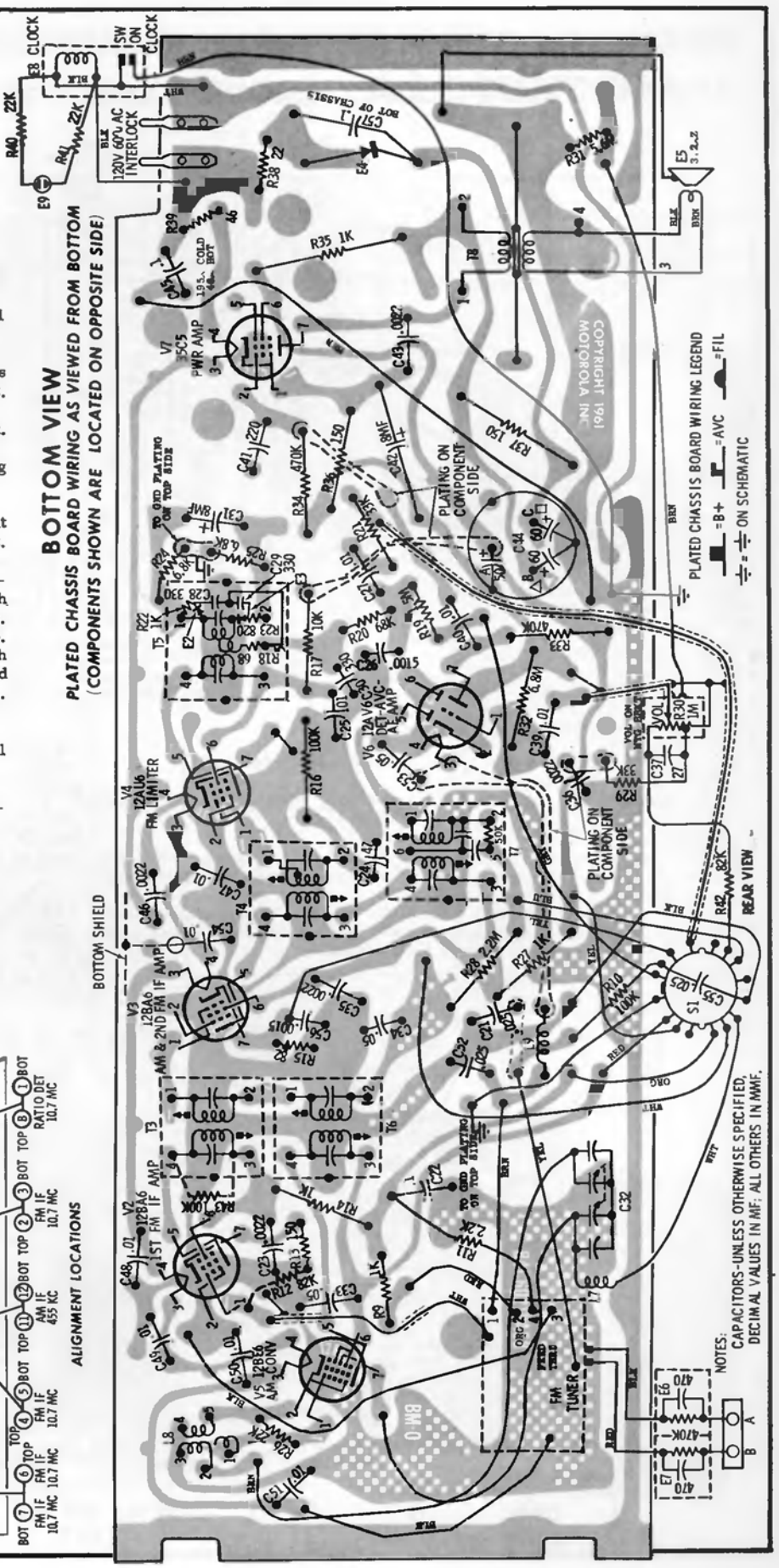

MOTOROLA MODEL A24 CHASSIS HS-4136

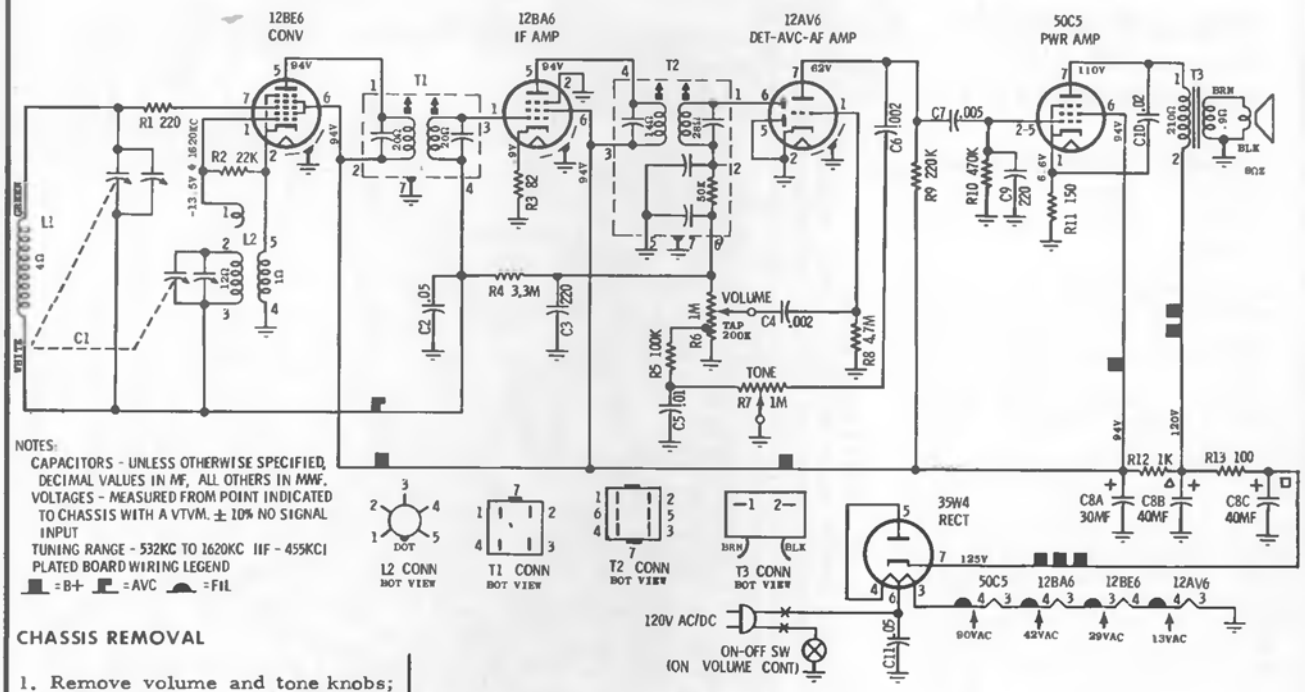

NOTES:
CAPACITORS - UNLESS OTHERWISE SPECIFIED, DECIMAL VALUES IN MF, ALL OTHERS IN MMF.
VOLTAGES - MEASURED FROM POINT INDICATED TO CHASSIS WITH A VTVM. ± 10% NO SIGNAL INPUT
TUNING RANGE - 532KC TO 1620KC IIF - 455KC
PLATED BOARD WIRING LEGEND
=B+ =AVC =FIL

CHASSIS REMOVAL

1. Remove volume and tone knobs; do not attempt to remove captivated tuning knob.

2. Remove cabinet back - 4 screws hold it in place.

3. From rear, remove chassis mounting screw at base of chassis, if necessary, also remove two gang mounting screws.

4. Unsolder speaker leads (and gang leads, if gang was not removed in Step 3).

5. Slide chassis and antenna out of cabinet.

TUNING KNOB REMOVAL

1. Remove cabinet back - 4 screws hold it in place.

2. From rear, remove two gang mounting screws and pull back gang.

3. To remove tuning knob, remove speed clip from knob shank from rear of knob.

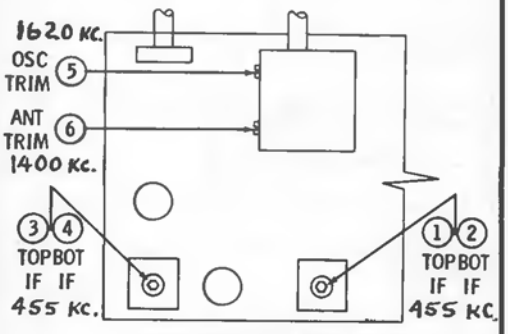

ALIGNMENT LOCATIONS

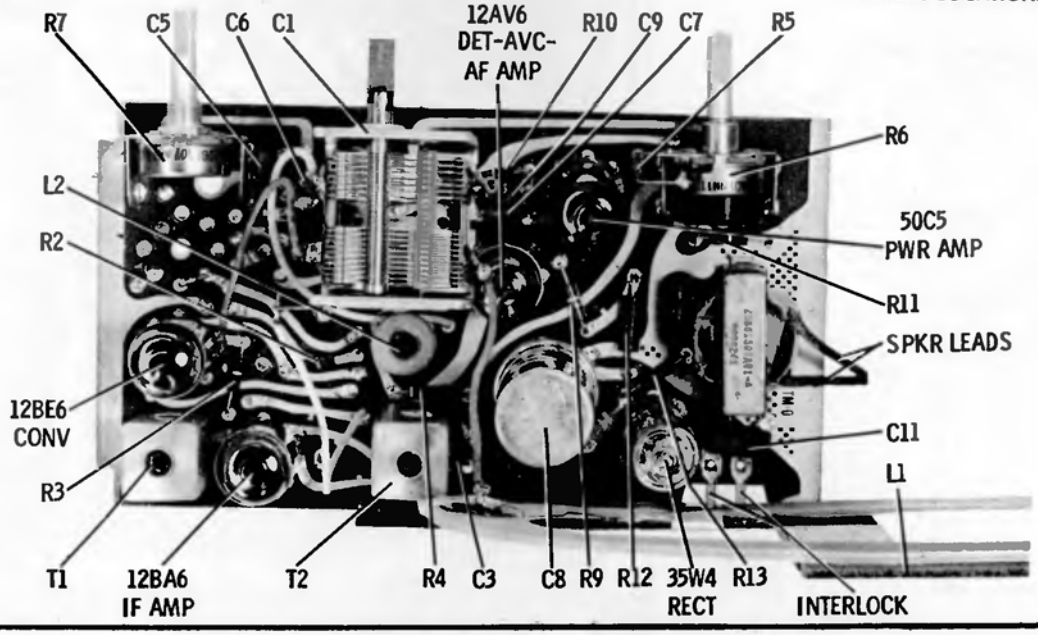

MOTOROLA MODELS C34,C35,C36 CHASSIS HS-998

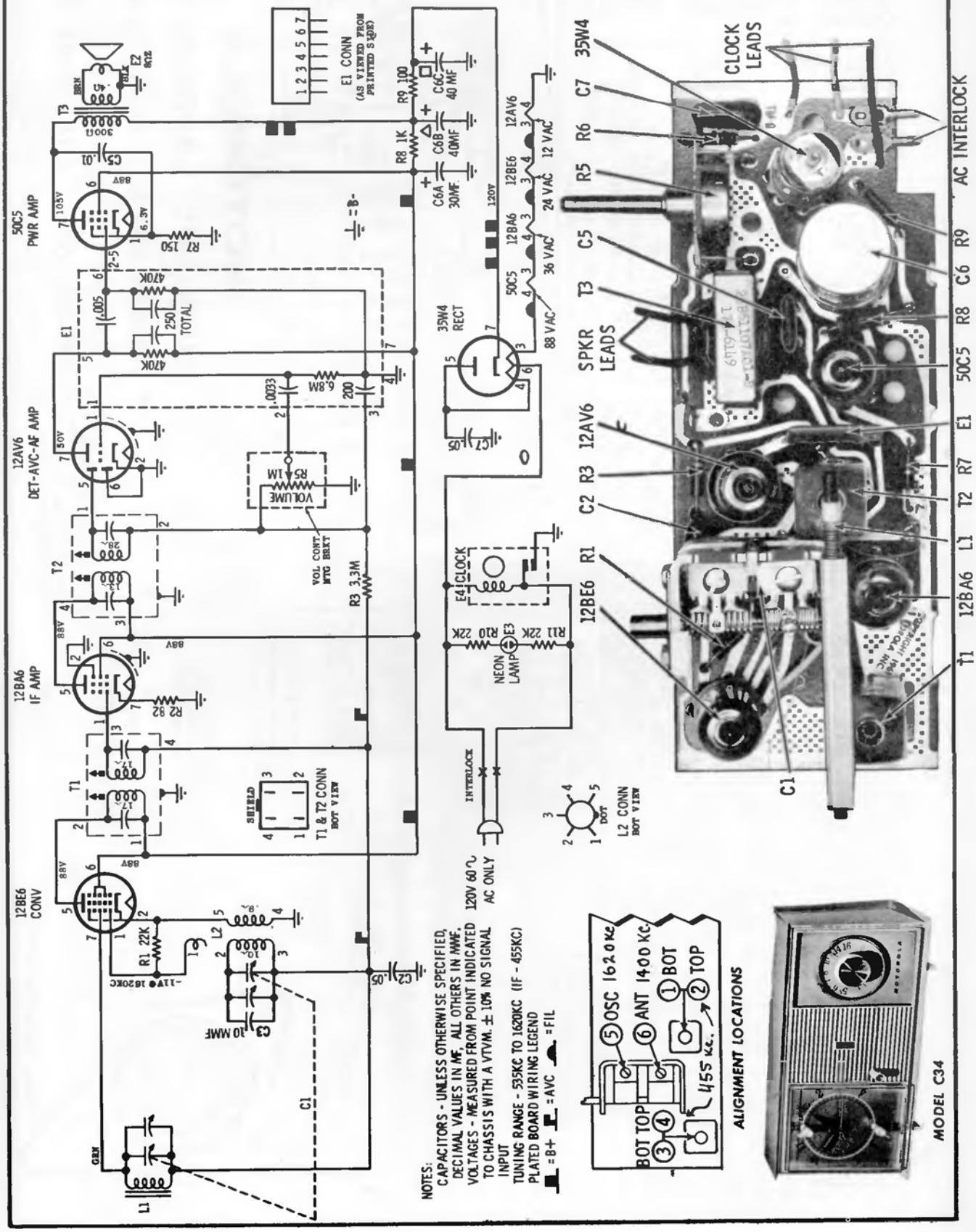

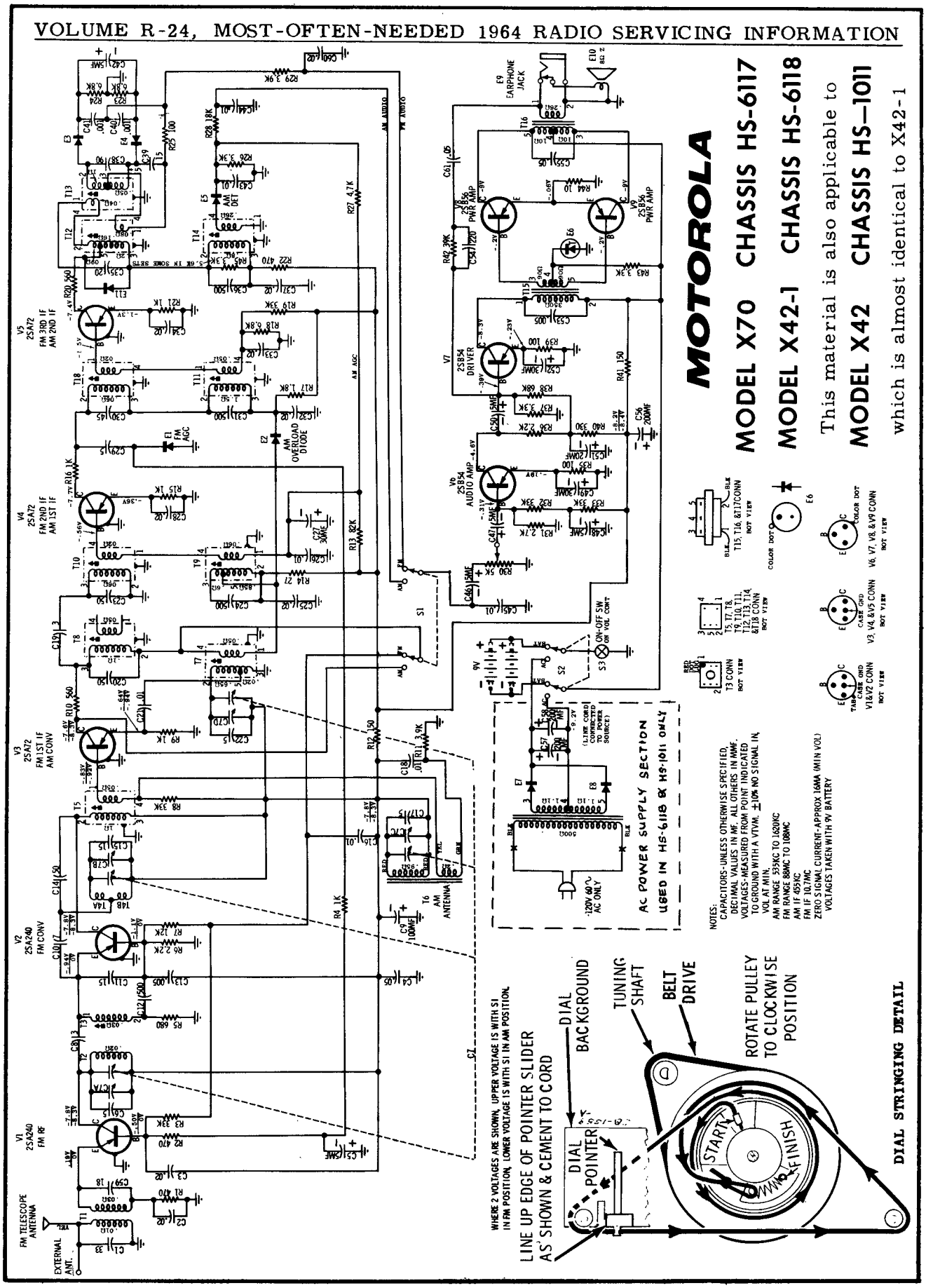
MOTOROLA
MODEL X70 CHASSIS HS-6117
MODEL X42-1 CHASSIS HS-6118
This material is also applicable to
MODEL X42 CHASSIS HS-1011
which is almost identical to X42-1
AC POWER SUPPLY SECTION
USED IN HS-6118 & HS-1011 ONLY
NOTES:
CAPACITORS-UNLESS OTHERWISE SPECIFIED, DECIMAL VALUES IN MF, ALL OTHERS IN MMF.
VOLTAGES-MEASURED FROM POINT INDICATED TO GROUND WITH A VTVM, ±10% NO SIGNAL IN, VOL AT MIN.
AM RANGE 535KC TO 1620KC
FM RANGE 88MC TO 108MC
AM IF 455KC
FM IF 10.7MC
ZERO SIGNAL CURRENT-APPROX 16MA (MIN VOL)
VOLTAGES TAKEN WITH 9V BATTERY
WHERE 2 VOLTAGES ARE SHOWN, UPPER VOLTAGE IS WITH S1 IN FM POSITION, LOWER VOLTAGE IS WITH S1 IN AM POSITION.
LINE UP EDGE OF POINTER SLIDER AS SHOWN & CEMENT TO CORD
DIAL BACKGROUND
DIAL POINTER
TUNING SHAFT
BELT DRIVE
ROTATE PULLEY TO CLOCKWISE POSITION
START
FINISH
DIAL STRINGING DETAIL

MOTOROLA MODEL X47

CHASSIS HS-6108

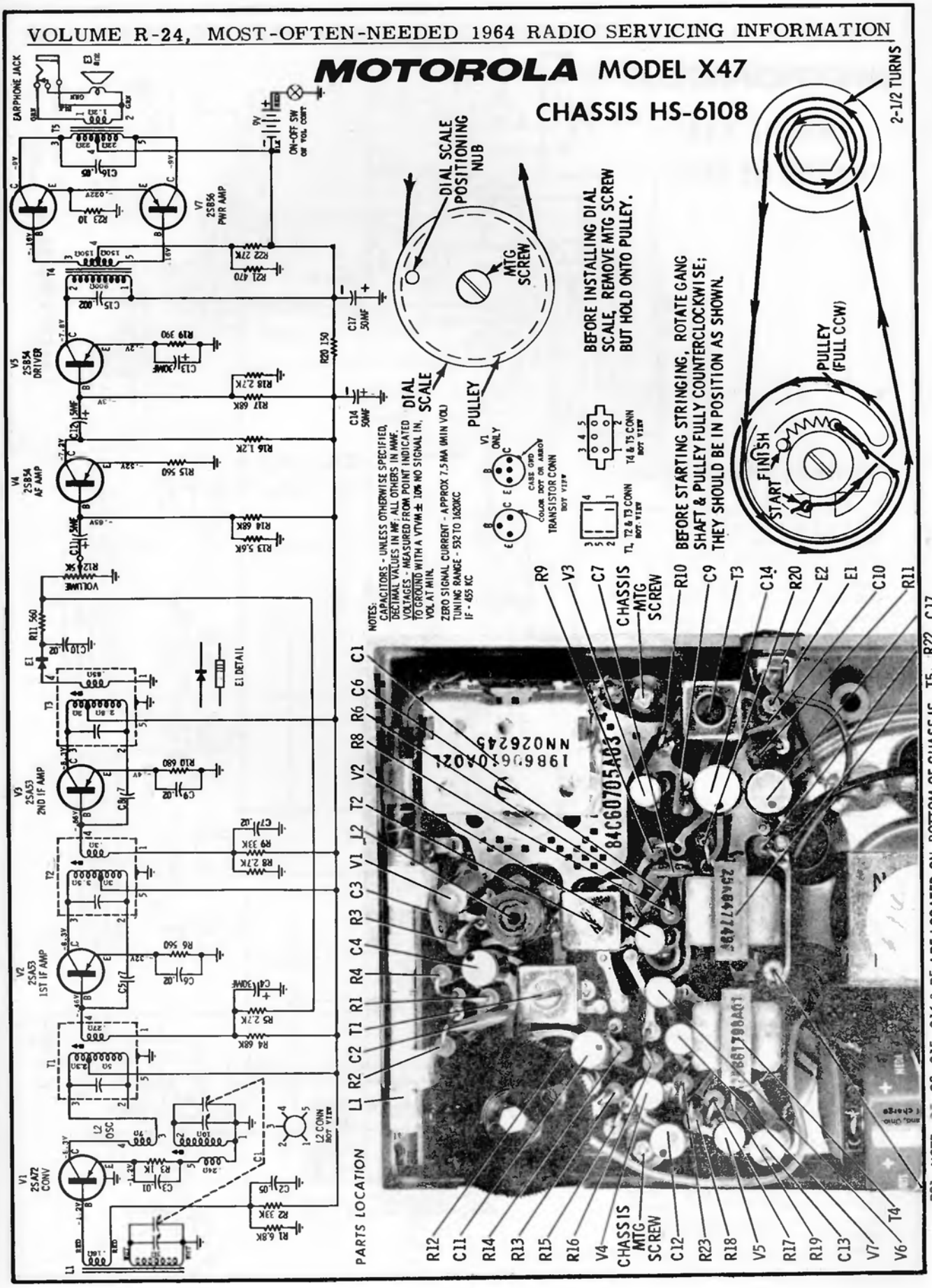

MOTOROLA

MODEL X48

CHASSIS HS-6111

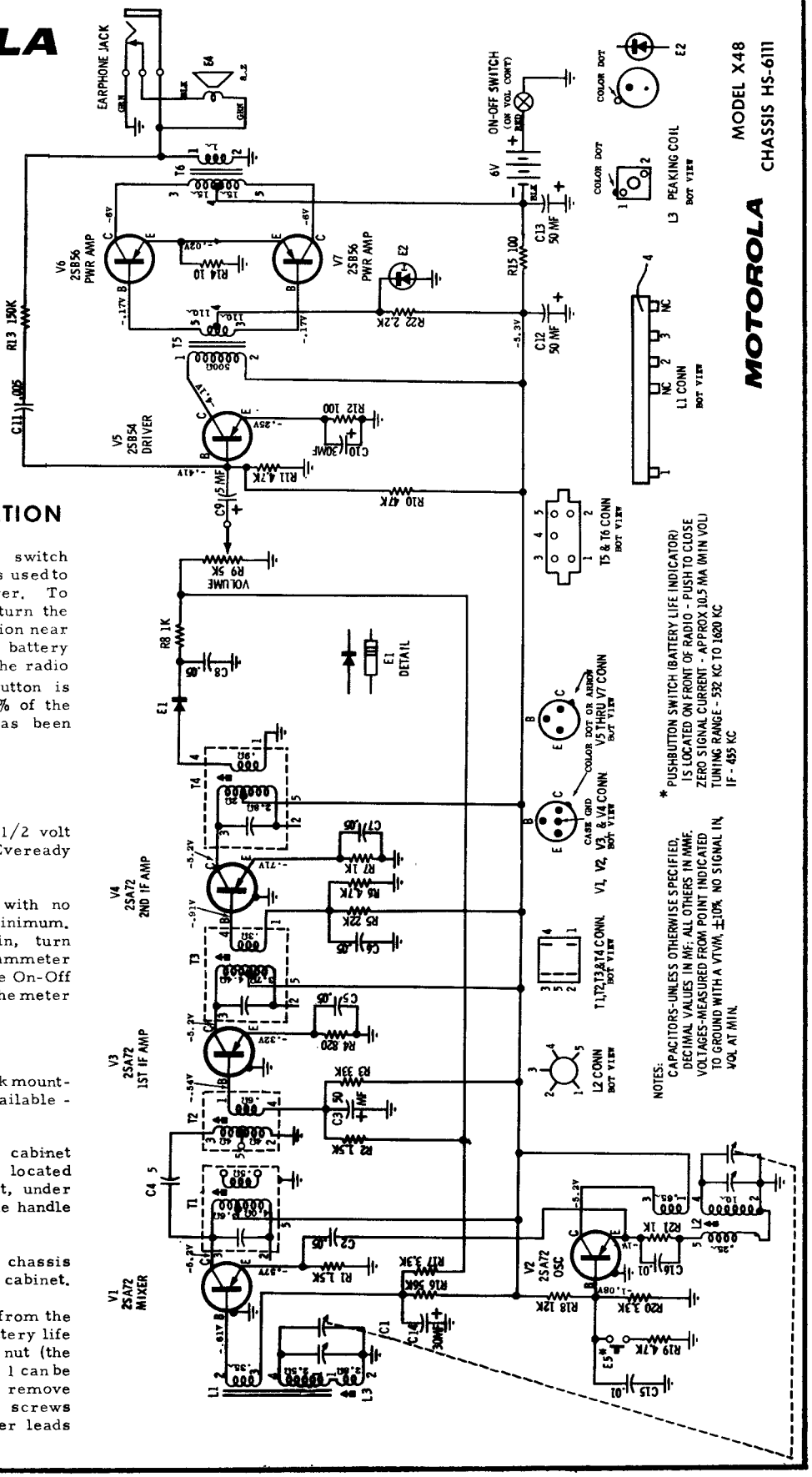

GENERAL INFORMATION

The battery life indicator switch (located on front of radio) is used to check for low battery power. To check the batteries, first turn the radio on and tune to a station near 1000Kc, then, press the battery indicator switch button; if the radio stops playing while the button is held in, approximately 90% of the available battery power has been used up.

Power Supply

Operates from four (4) 1-1/2 volt batteries; use four (4) Eveready #1015 or equivalent.

Battery Drain - 10.5 ma with no input signal and volume at minimum. To measure battery drain, turn radio off and connect a milliammeter across the terminals of the On-Off switch (observe polarity); the meter should read 10.5 ma.

Chassis Removal

1. Remove the earphone jack mounting nut (a special tool is available - order Part No. 66A646211).

2. Remove the two (2) cabinet mounting screws (they are located on the sides of the cabinet, under the carrying handle - lift the handle to expose them).

3. Lift the escutcheon and chassis as an assembly out of the cabinet.

4. To remove the chassis from the escutcheon, remove the battery life indicator switch mounting nut (the same tool described in Step 1 can be used to remove this nut), remove three (3) chassis mounting screws and, if necessary, unsolder leads connected to chassis.

MOTOROLA

MODEL X49, X50

CHASSIS HS-6112

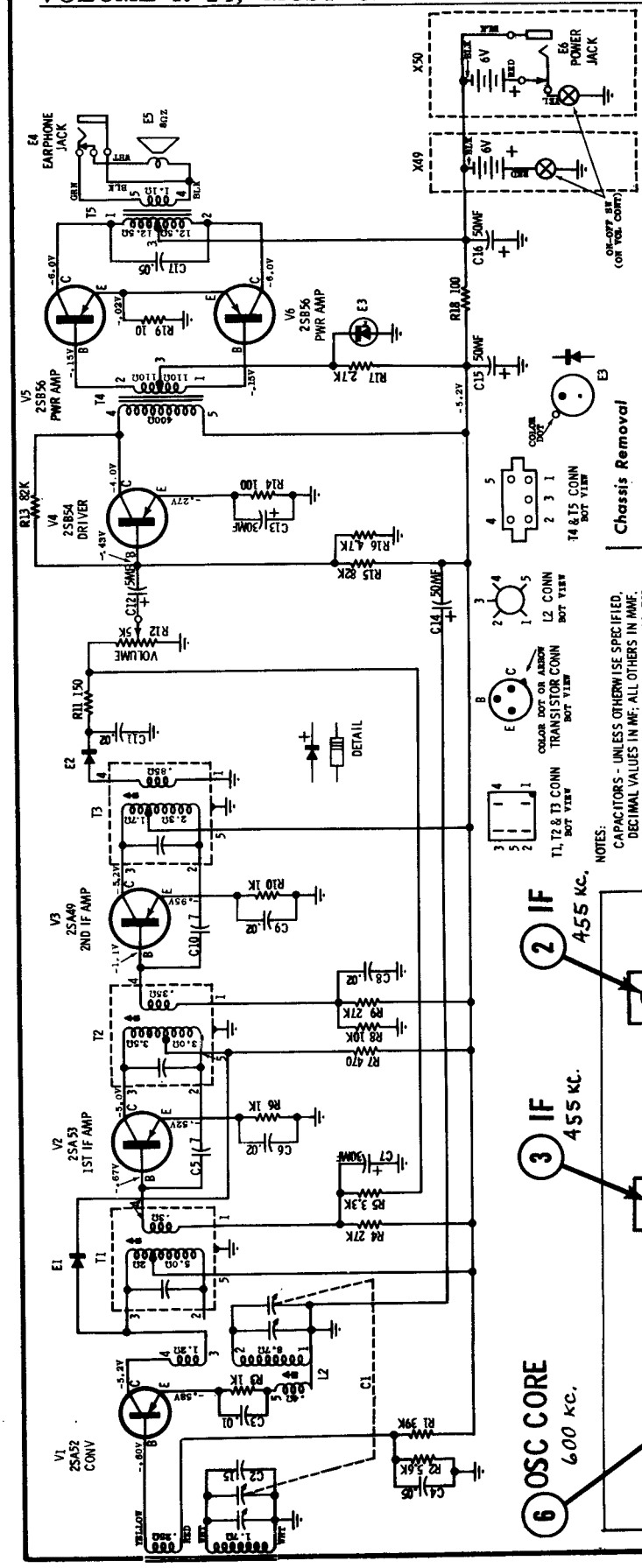

Chassis Removal

1. From front of radio, remove two (2) control knobs and the screw located under the tuning knob.

2. From rear of radio, open back panel by unsnapping the three (3) tabs at bottom of panel; then, lift battery retainer and AC power supply (X50 only) out of their compartment at rear of cabinet.

3. Lift armite insulator to gain access to chassis.

4. Remove three (3) chassis mounting screws and unsnap antenna from its mounting clamps. If necessary, unsolder leads connected to chassis before removing chassis from the cabinet.

5. If it becomes necessary to remove the earphone jack or the power jack (X50), a special inexpensive tool is available

Power Supply

These radios operate from four (4) 1-1/2 volt batteries; use four (4) Eveready #1015 or equivalent. Model X50, in addition, can be powered from a 120 volt, 60 cycle AC power outlet by using the AC power supply included with the radio.

Battery Drain - 9.5 ma with no input signal and volume at minimum. To measure battery drain, turn radio off and connect a milliammeter across the terminals of the On-Off switch (observe polarity); the meter should read 9.5 ma.

MOTOROLA

MODEL X51 CHASSIS HS-6114

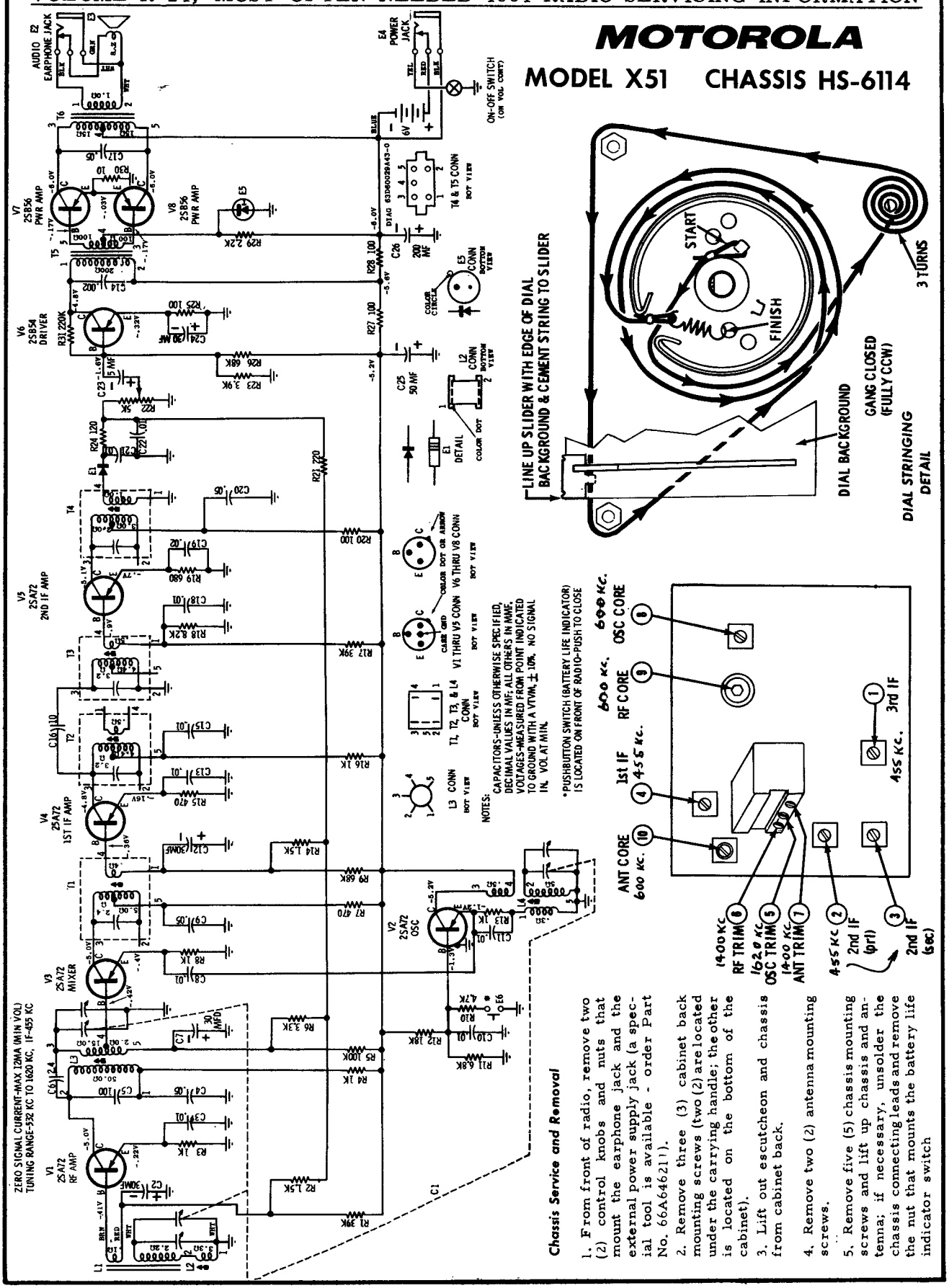

Chassis Service and Removal

1. From front of radio, remove two (2) control knobs and nuts that mount the earphone jack and the external power supply jack (a special tool is available - order Part No. 66A646211).
2. Remove three (3) cabinet back mounting screws (two (2) are located under the carrying handle; the other is located on the bottom of the cabinet).
3. Lift out escutcheon and chassis from cabinet back.
4. Remove two (2) antenna mounting screws.
5. Remove five (5) chassis mounting screws and lift up chassis and antenna; if necessary, unsolder the chassis connecting leads and remove the nut that mounts the battery life indicator switch

MOTOROLA

MODEL X54
CHASSIS HS-6123

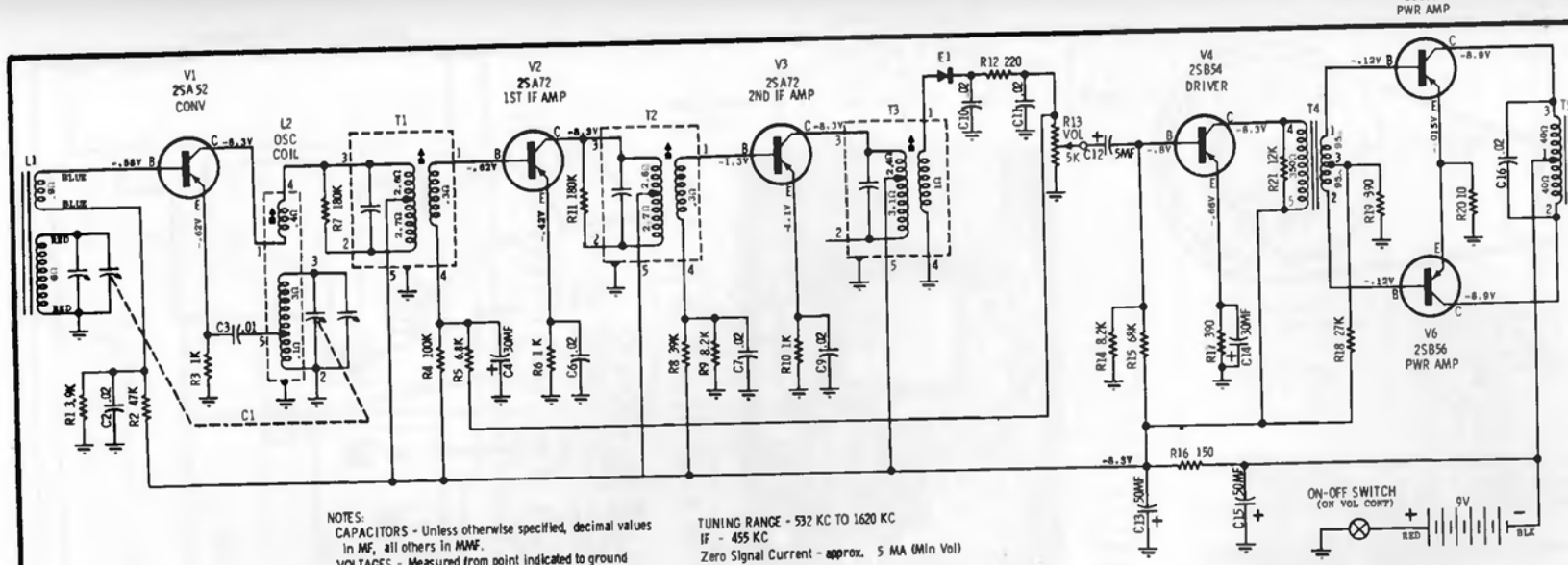

NOTES:
CAPACITORS - Unless otherwise specified, decimal values in MF, all others in MMF.
VOLTAGES - Measured from point indicated to ground with a VTVM, ± 10%. No signal in, vol at min

TUNING RANGE - 532 KC TO 1620 KC
IF - 455 KC
Zero Signal Current - approx. 5 MA (Min Vol)

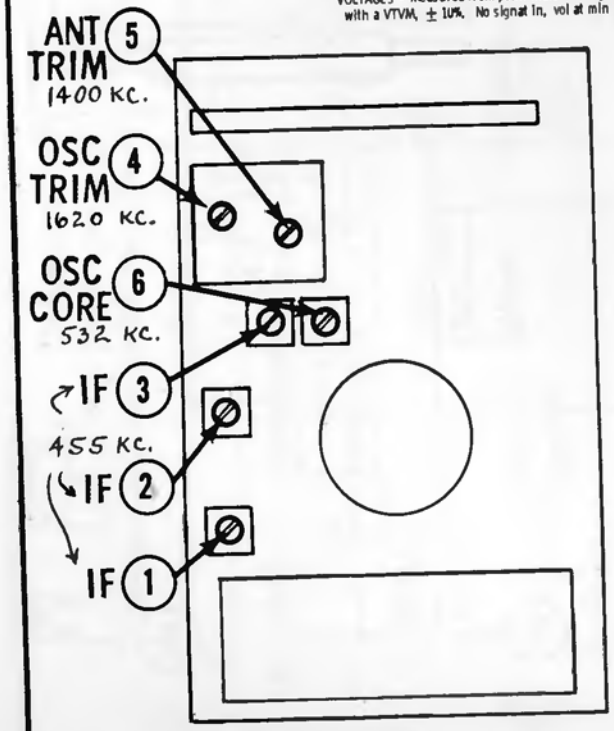

ALIGNMENT LOCATIONS

Power Supply

Operates from one (1) 9-volt battery; use Eveready #206 or equivalent.

Battery Drain - 5.0 ma with no input signal and volume at minimum. To measure battery drain, turn radio off and connect a milliammeter across the on-off switch (observe polarity); the meter should read 5.0 ma.

Chassis Removal

1. Remove cabinet back by applying thumb pressure at bottom; then remove one (1) chassis mounting screw located next to tuning gang.

2. Spread cabinet slightly at right side (adjacent to volume control) until chassis is free from its two (2) chassis retainers (part of cabinet). Lift chassis up until it clears all three (3) retainers.

3. If necessary, unsolder all chassis connecting leads. If it becomes necessary to remove the earphone jack, pull jack retainer out of the groove in cabinet wall.

MOTOROLA MODEL X56 CHASSIS HS-6124

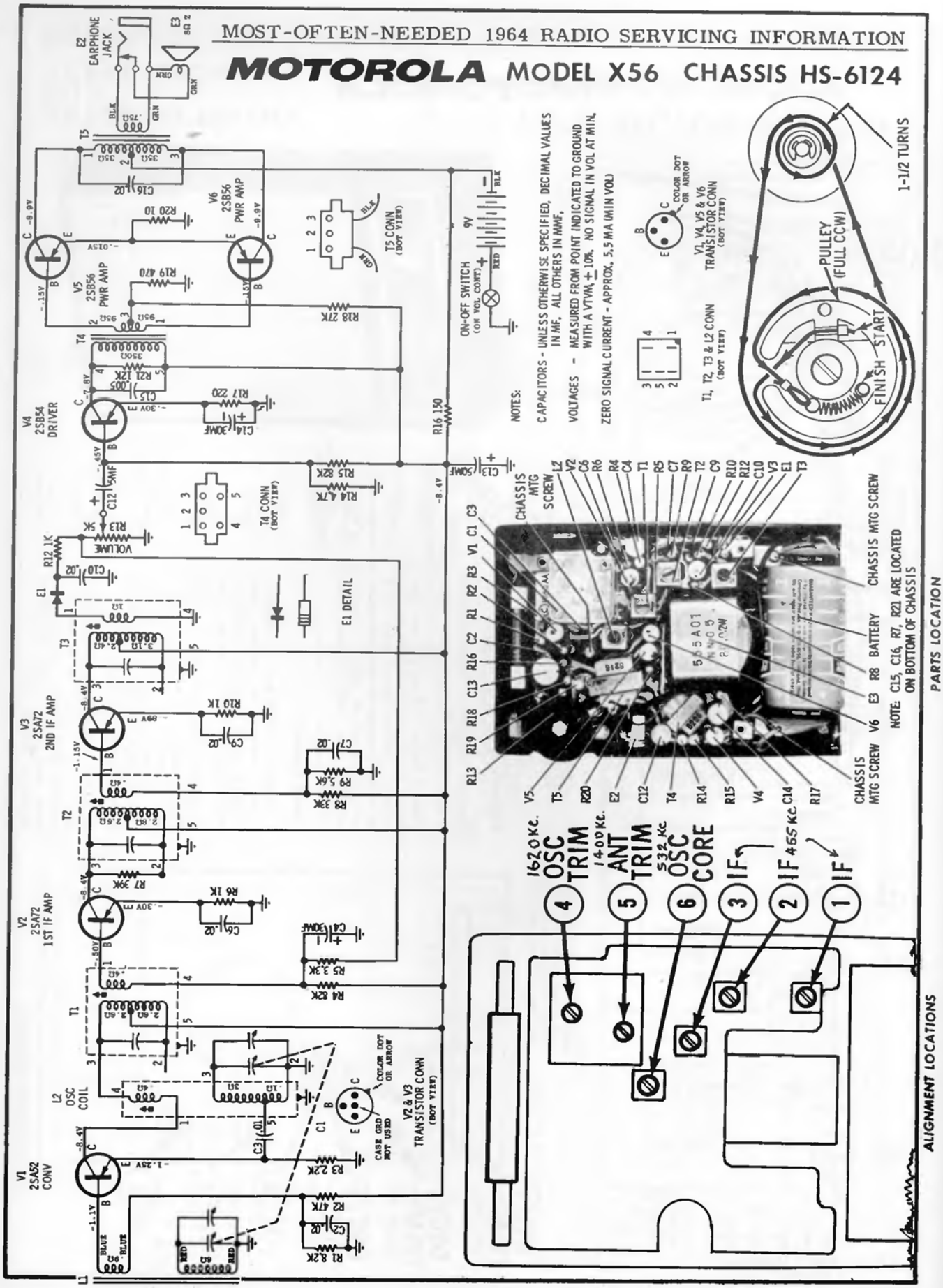

MOTOROLA MODEL SP51 CHASSIS HS-1134

CHASSIS REMOVAL

1. Remove 4 screws that mount the record changer mounting board to the cabinet.

2. Lift up the record changer mounting board to gain access to underside of record changer, then unsolder and disconnect all leads that are connected from chassis to record changer and speaker.

3. Remove 3 control knobs and two large chassis mounting nuts and washers, then remove chassis from cabinet; if necessary, remove 4 screws that mount control bracket to chassis to expose chassis interior and controls.

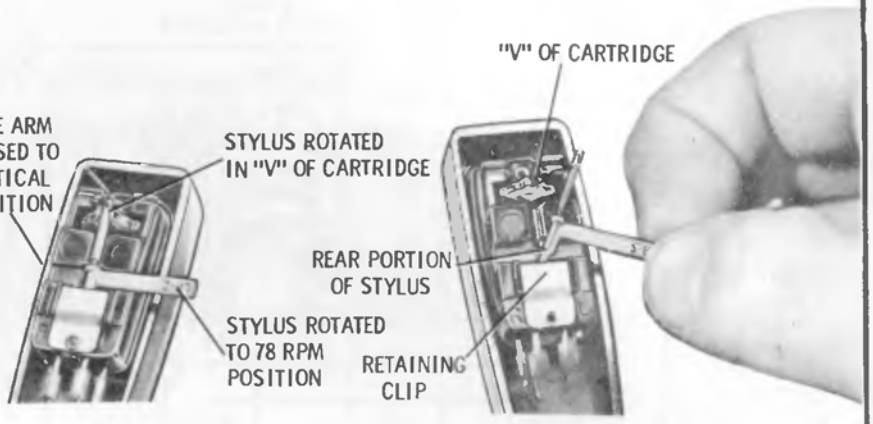

LINE CORD REVERSAL - For minimum hum, insert line cord plug in both positions. Leave it in the position that provides minimum hum.

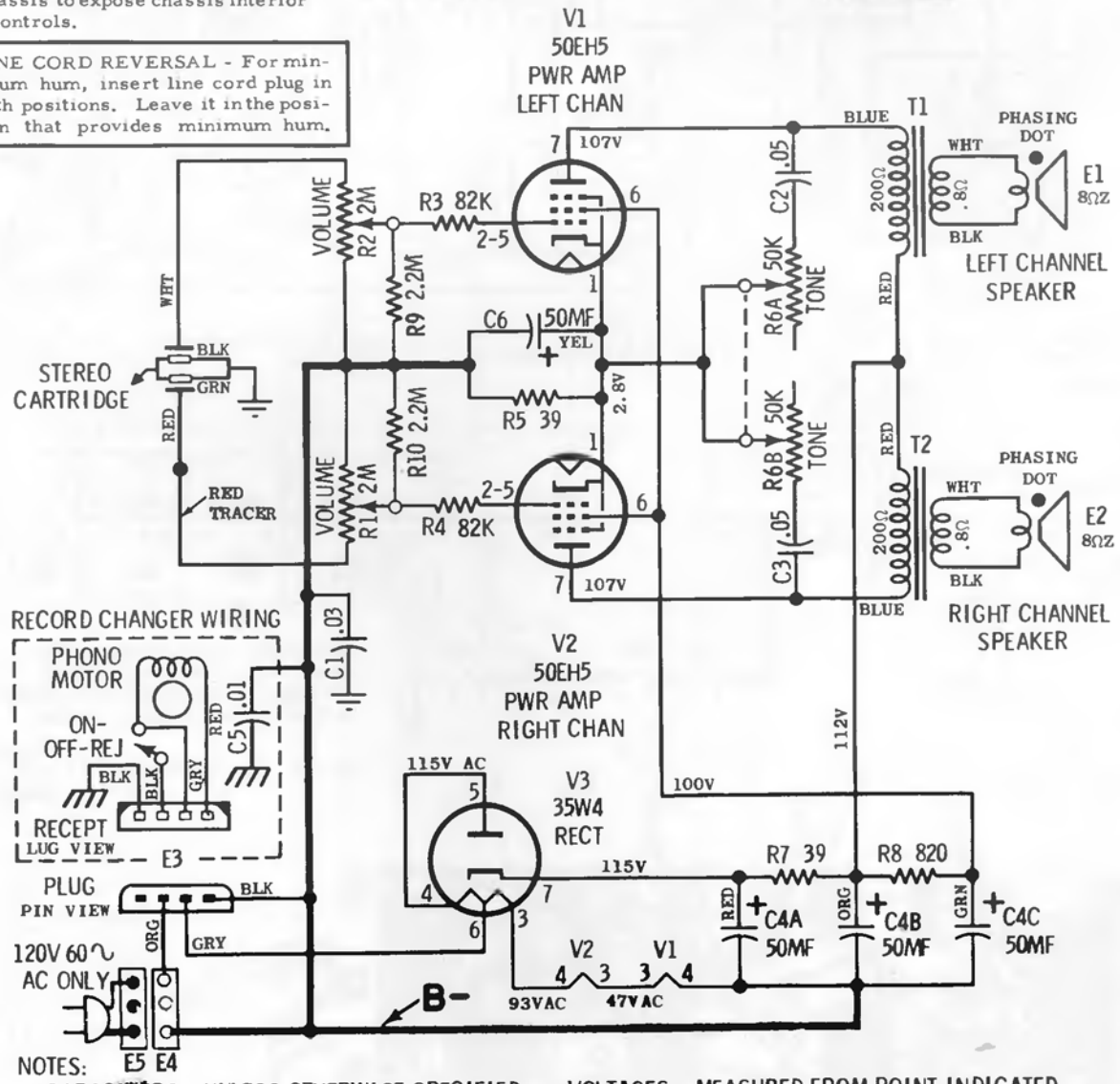

NOTES:

CAPACITORS - UNLESS OTHERWISE SPECIFIED, DECIMAL VALUES IN MF, ALL OTHERS IN MMF.

VOLTAGES - MEASURED FROM POINT INDICATED TO B- WITH A VTVM, ± 10% NO SIGNAL INPUT.

⊥ = CHASSIS GROUND

⏚ = RC GROUND

MOTOROLA MODELS SP52,SP511 CHASSIS HS-1135

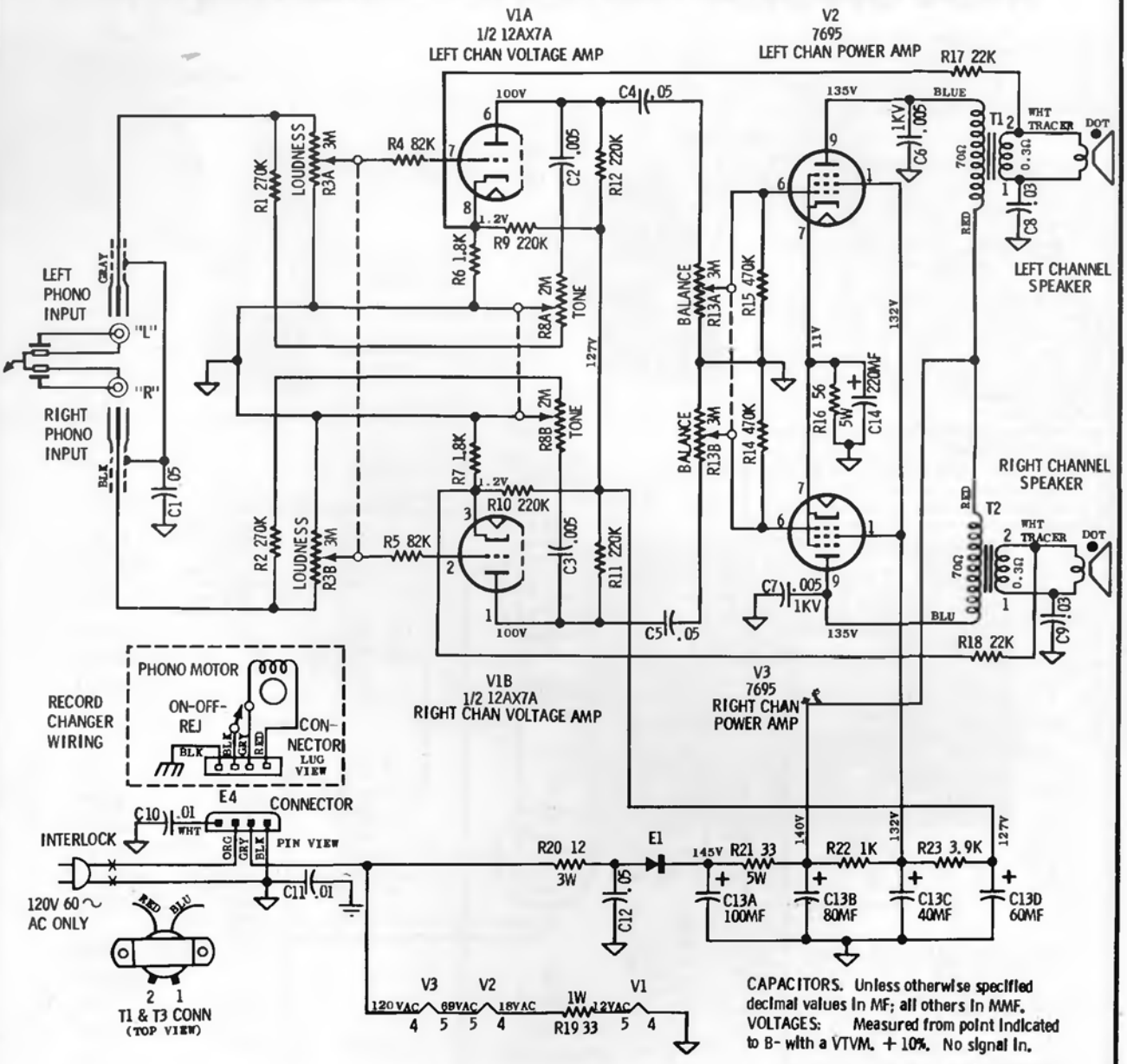

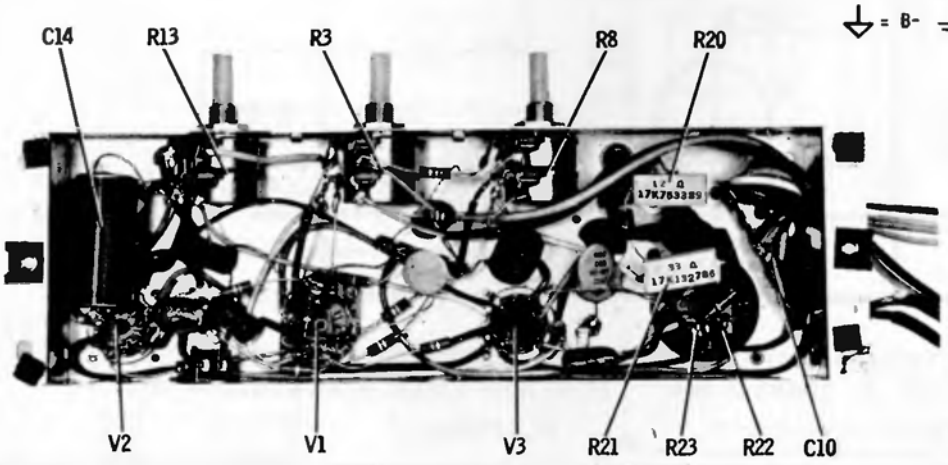

PARTS LOCATION

MOTOROLA MODELS HK53-1 (HS-1117), HK53-2 (HS-1123)

(This tuner is used in various combinations)

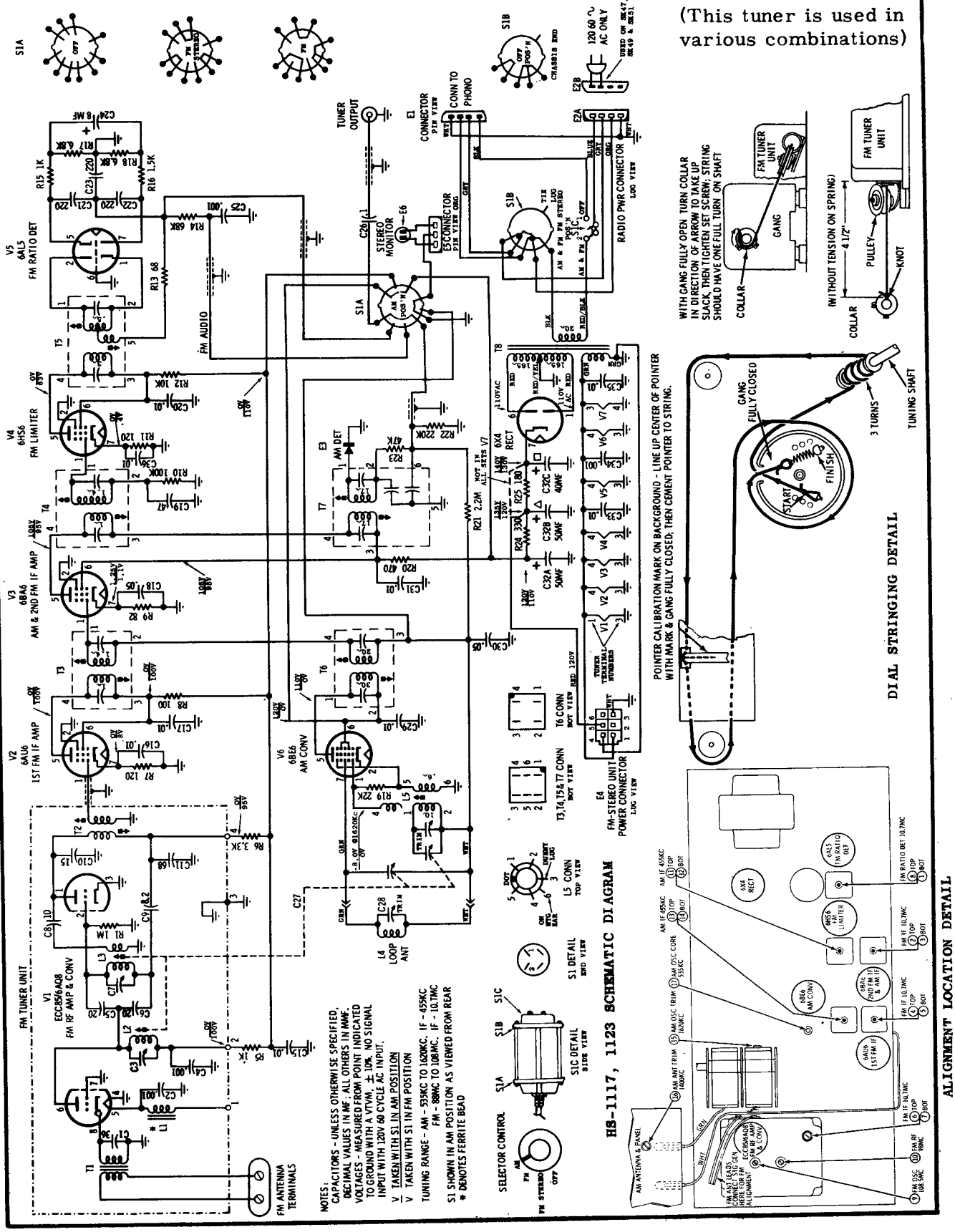

MOTOROLA Model HK54-2, Chassis HS-996, used in various FM-Stereo combinations

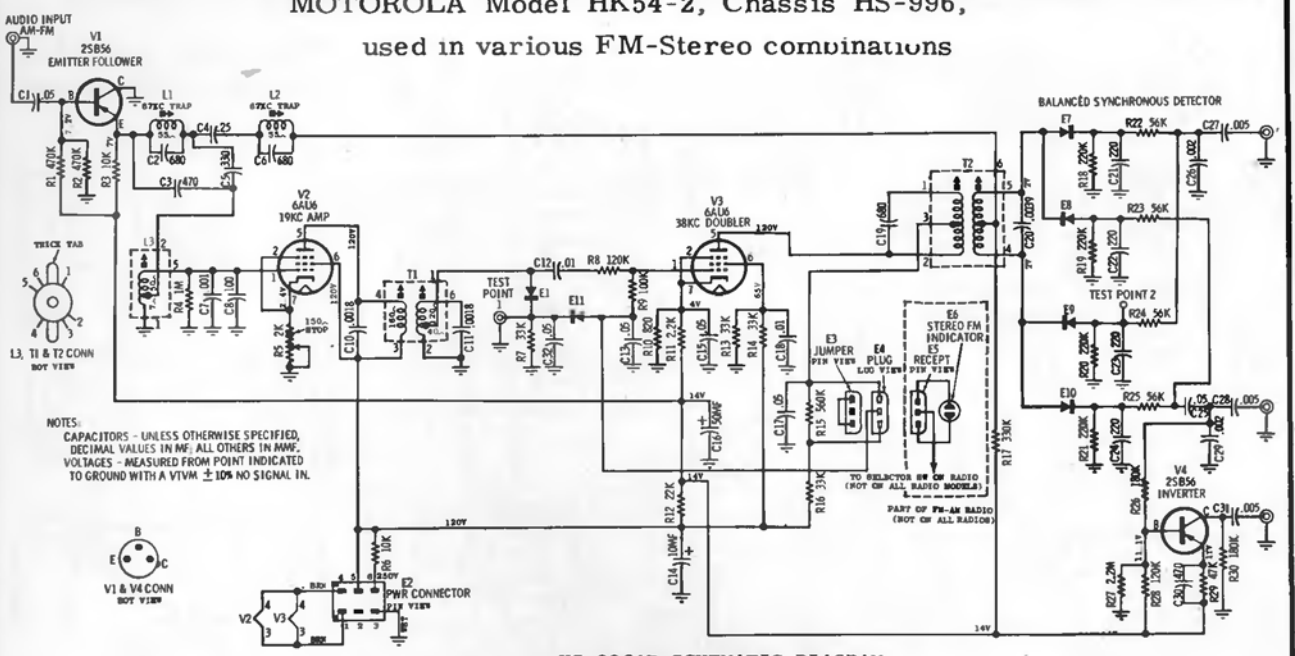

HS-996AB SCHEMATIC DIAGRAM

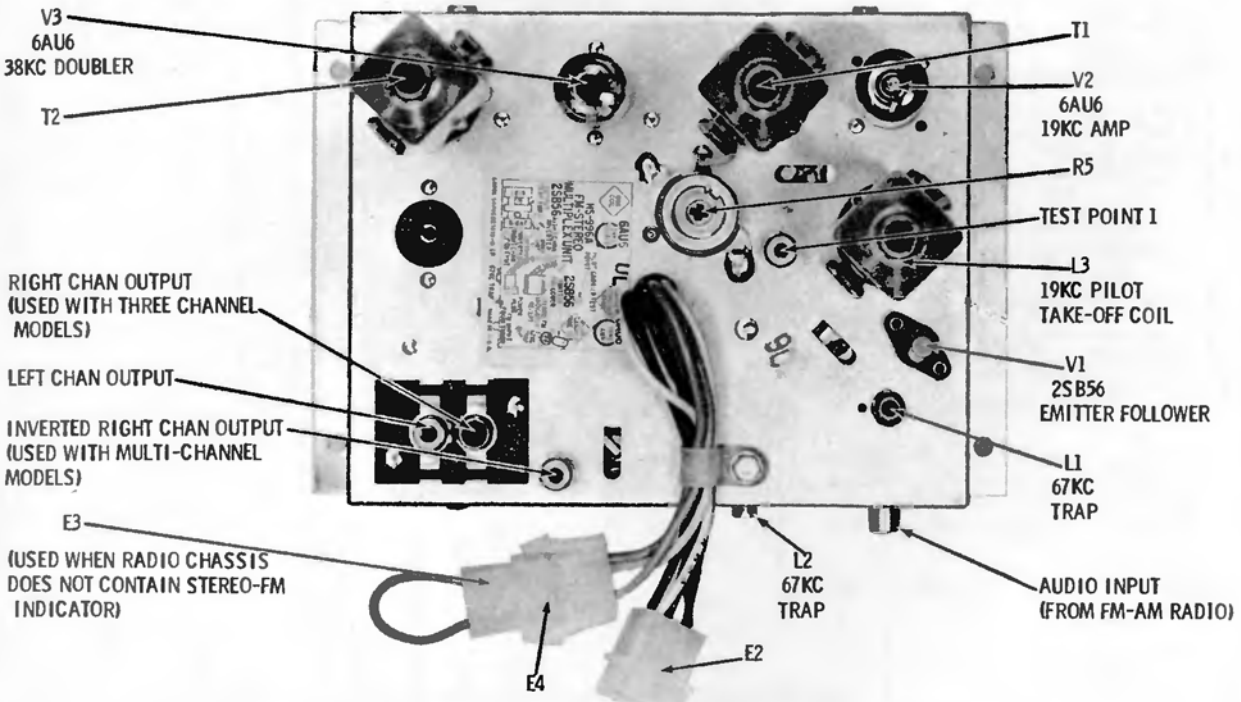

METHOD ALIGNMENT OF HK-54-2 USING AN FM-STEREO STATION AIR SIGNAL

NOTE: Storecast traps cannot be aligned using an air signal. A generator must be used for trap alignment.

19Kc Pilot Carrier Channel Alignment And 38Kc Frequency Doubler Adjustment

With stereo radio tuned to a good stereo-FM broadcast and output of radio applied to audio input jack of HK-54-2, proceed as follows:

1. Connect positive lead of VTVM to Test Point 1; negative lead to ground.

2. Adjust L-3 and primary and secondary of T-1 for maximum indication on VTVM.

3. Move VTMV to Test Point 2 and adjust T-2 primary and secondary for maximum meter indication.

4. Move VTVM to Test Point 1 and while monitoring this voltage, carefully adjust L-3 for maximum separation in left and right speakers on program material. This maximum separation point should be very near peak meter indications.

Adjustment of Sensitivity Control, R 5

The control should be set so that the stereo monitor lights on stereo signals but does not light on noise in between stations.

MOTOROLA

Chassis HS-1048 and HS-1050 used in Models SK-77-2, SK-78-1, SK-79-1, SK-111, SK-112, SK-115, SK-116.

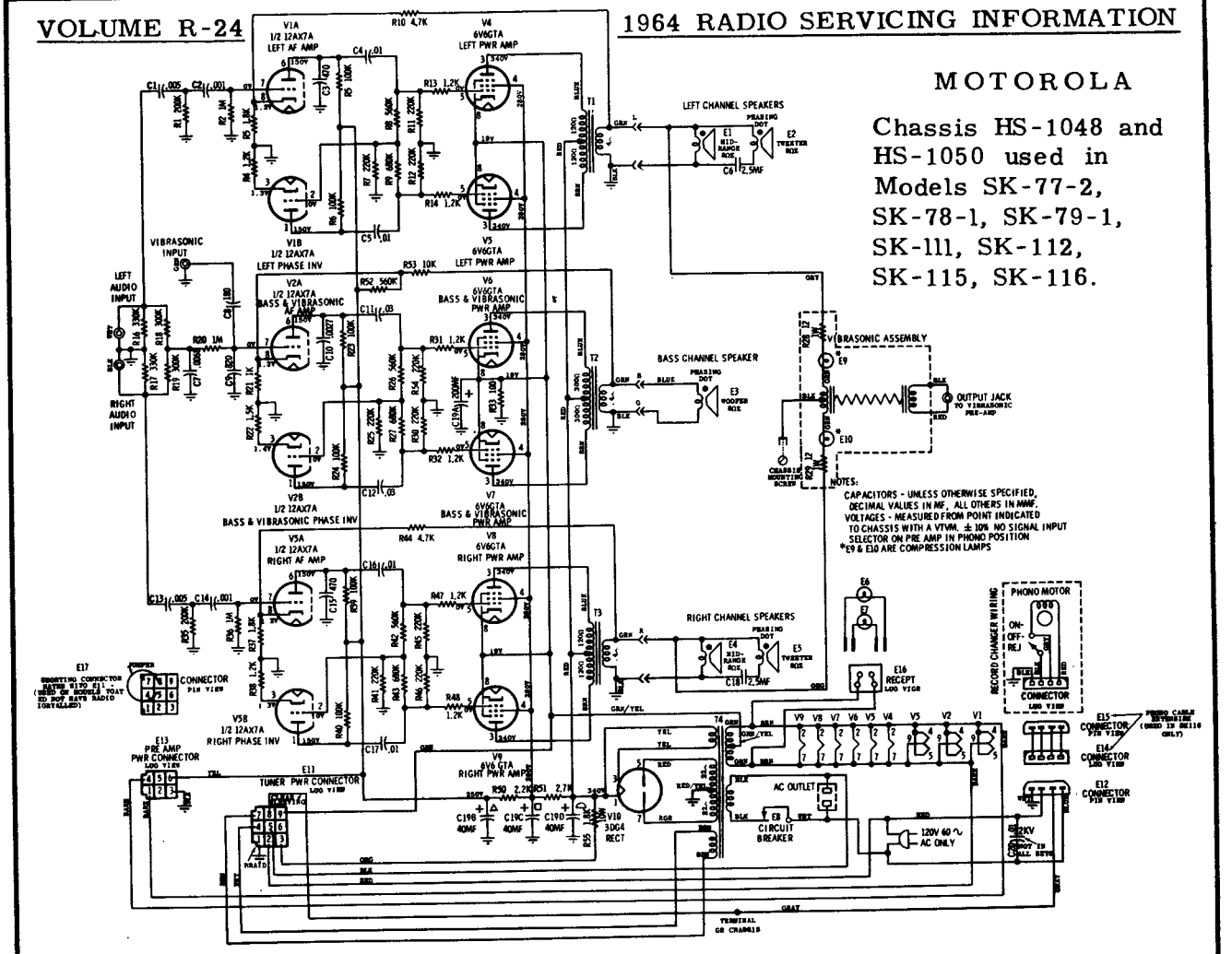

HS-1048 POWER AMP & POWER SUPPLY SCHEMATIC DIAGRAM

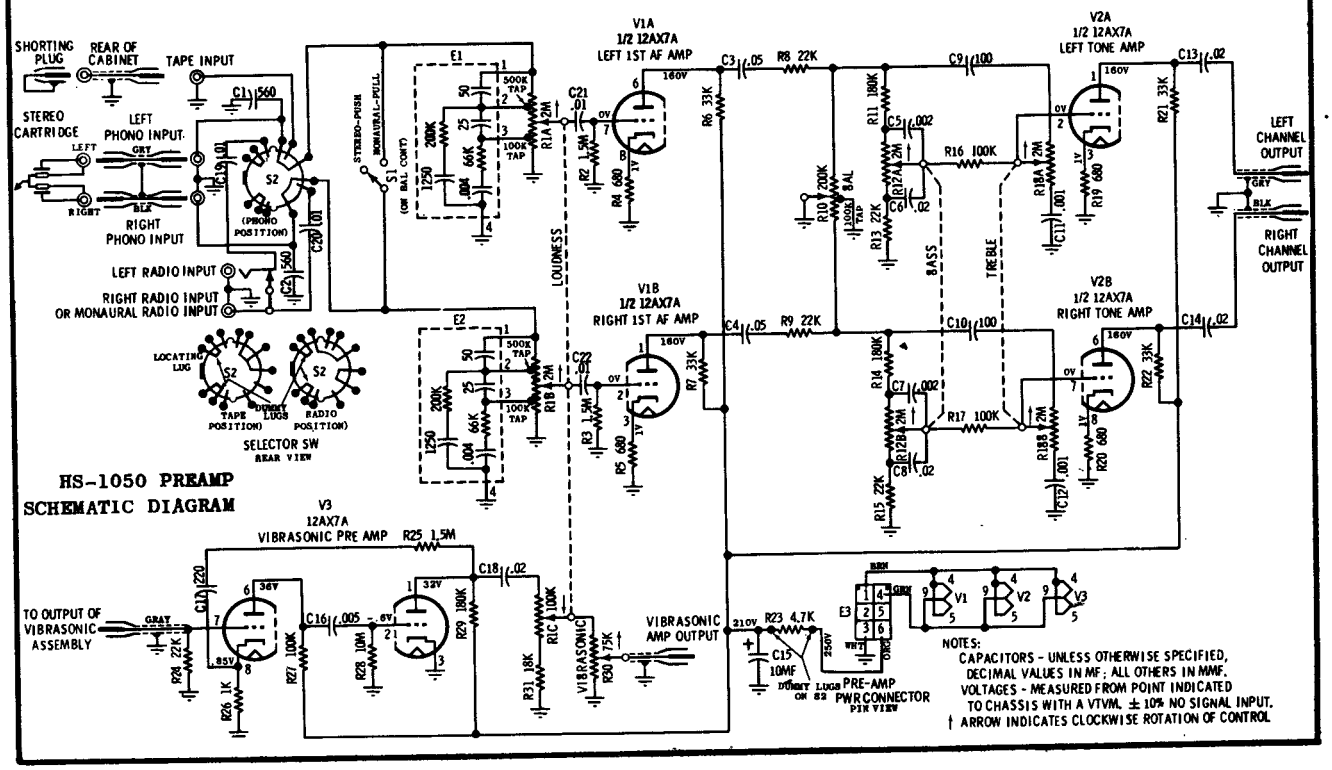

HS-1050 PREAMP SCHEMATIC DIAGRAM

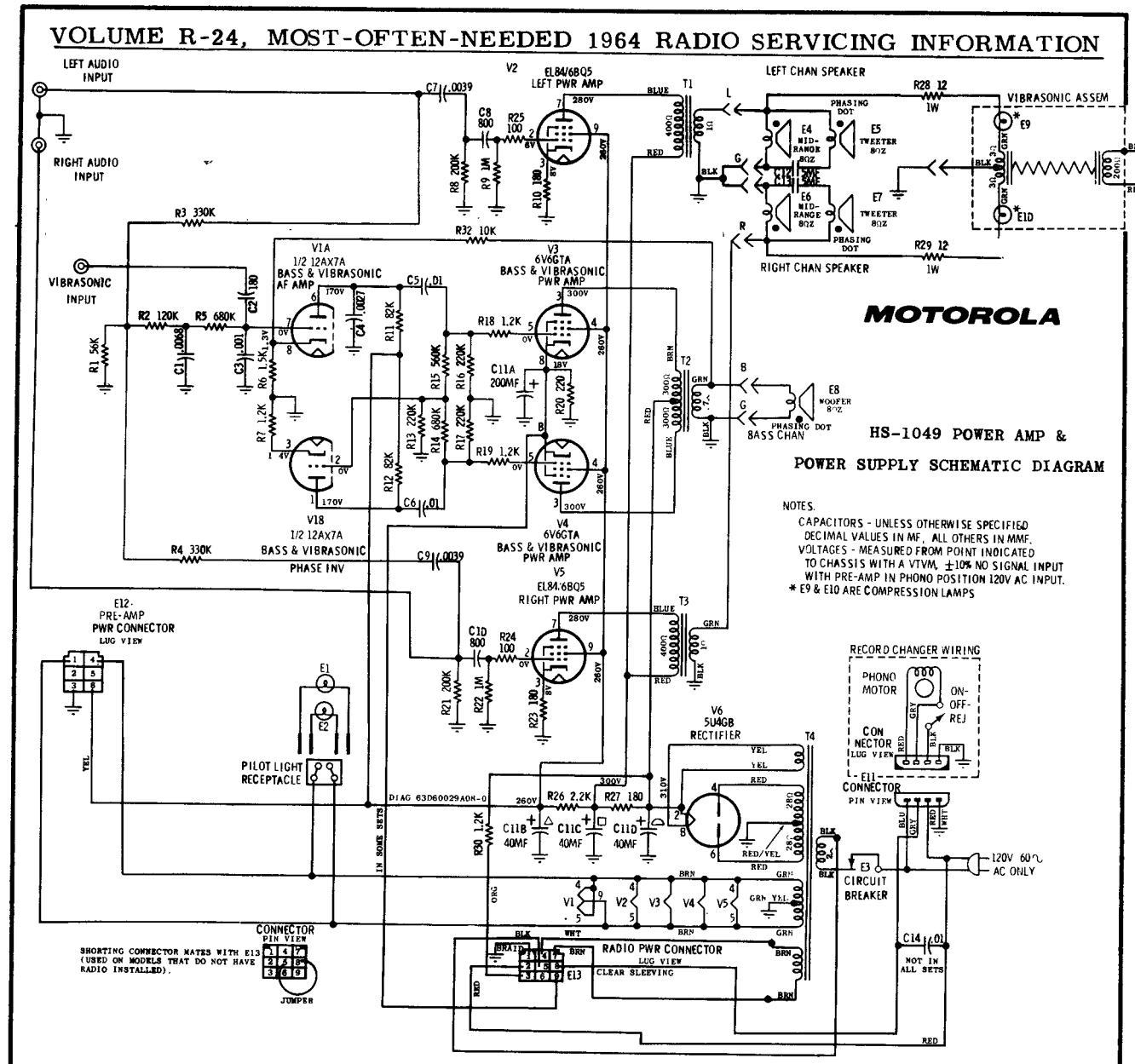

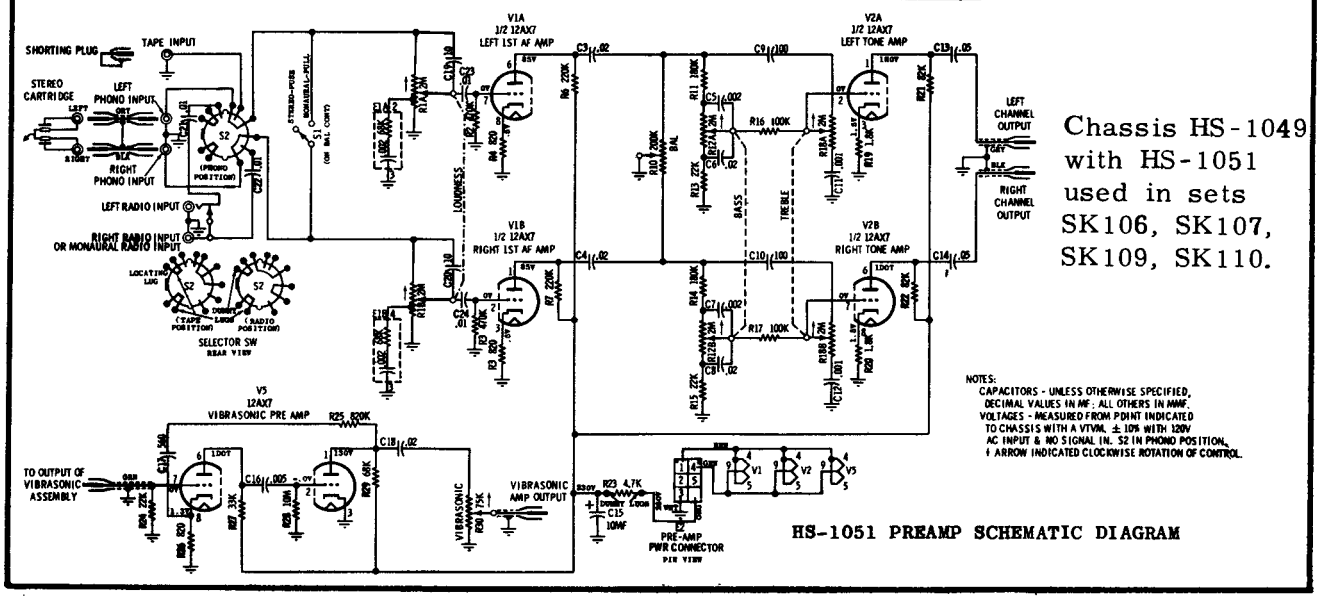

Chassis HS-1049 with HS-1051 used in sets SK106, SK107, SK109, SK110.

HS-1051 PREAMP SCHEMATIC DIAGRAM

MOTOROLA MODELS SK100-4,SK124,SK125 CHASSIS HS-1201

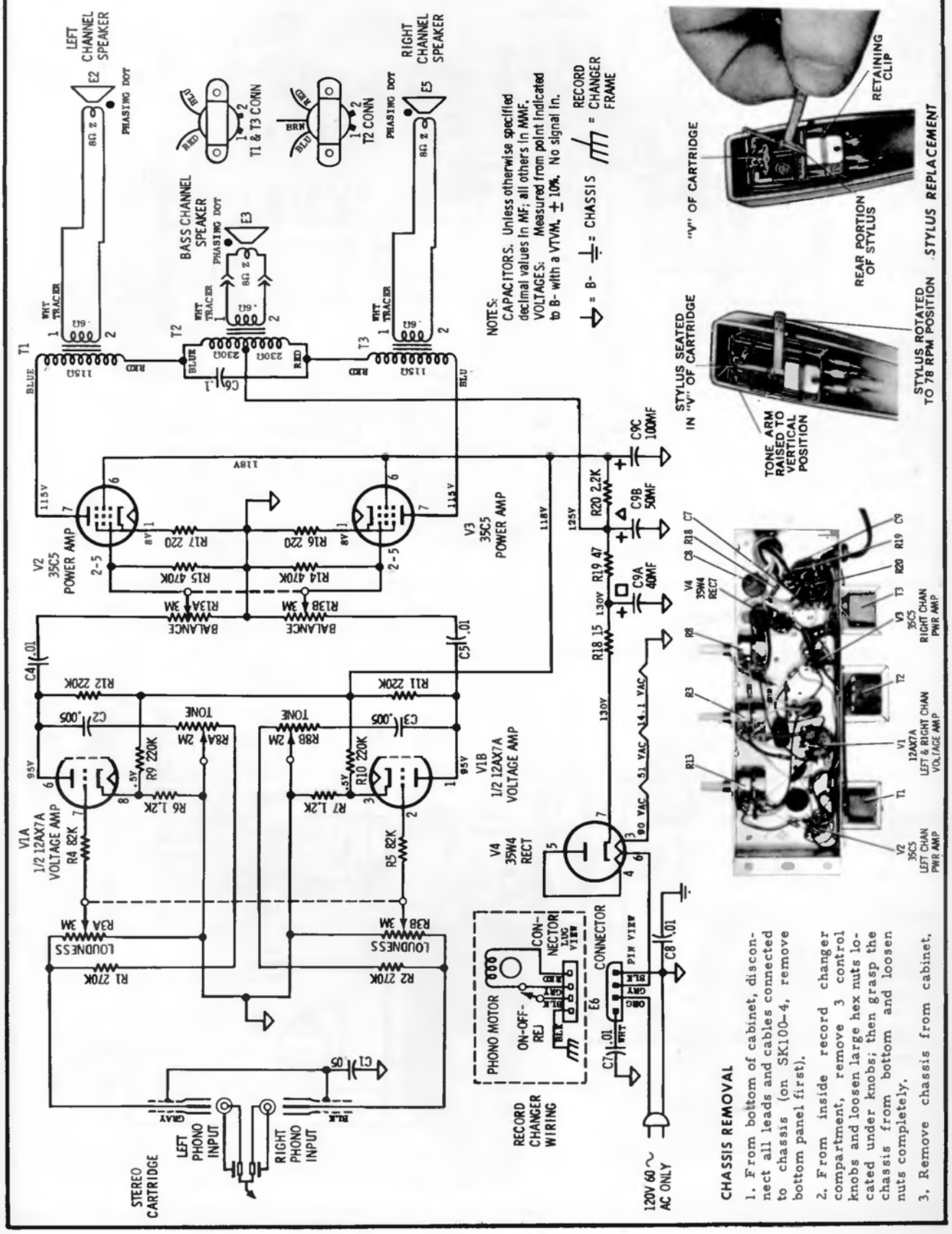

CHASSIS REMOVAL

1. From bottom of cabinet, disconnect all leads and cables connected to chassis (on SK100-4, remove bottom panel first).

2. From inside record changer compartment, remove 3 control knobs and loosen large hex nuts located under knobs; then grasp the chassis from bottom and loosen nuts completely.

3. Remove chassis from cabinet.

MOTOROLA Models SK103, SK104, SK105, SK108, Chassis HS-1055, HS-1102

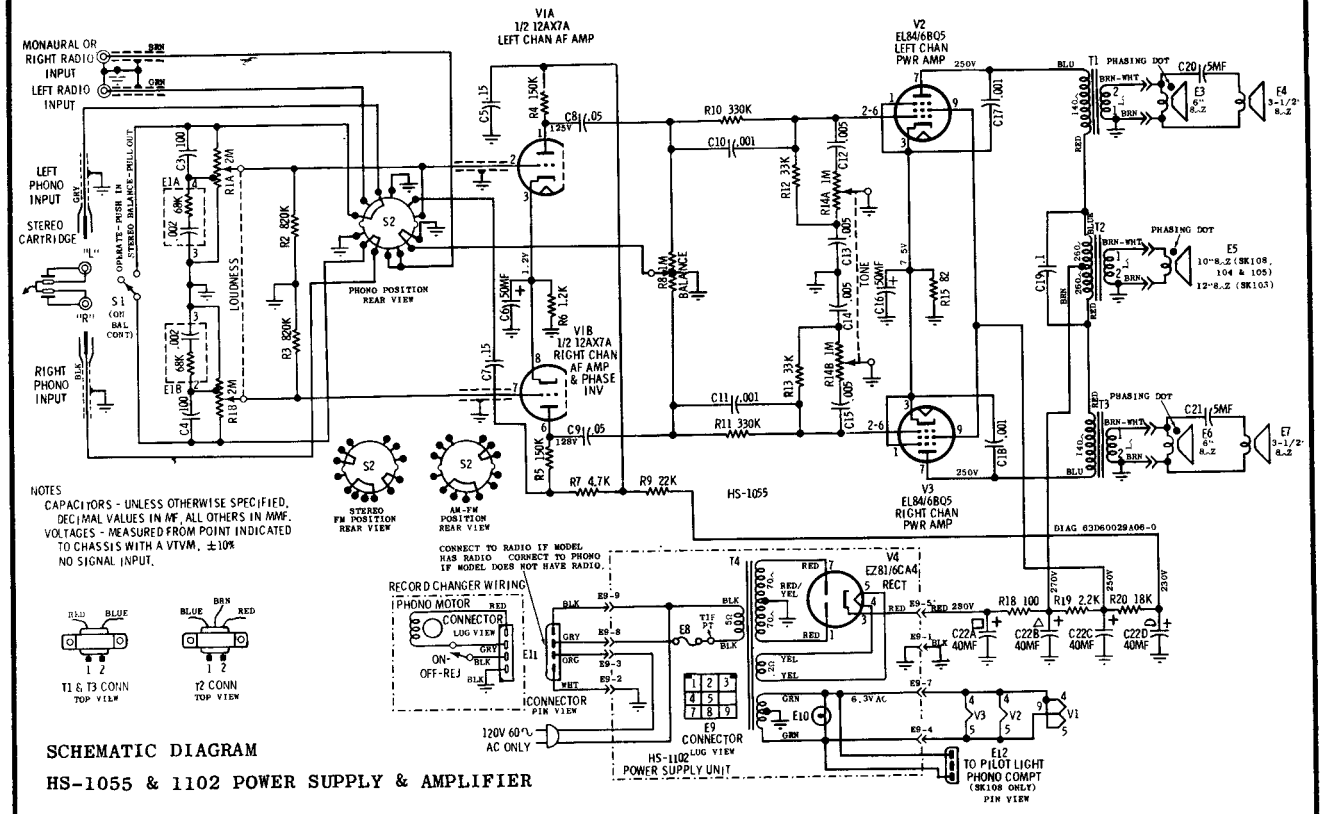

NOTES
CAPACITORS - UNLESS OTHERWISE SPECIFIED, DECIMAL VALUES IN MF, ALL OTHERS IN MMF.
VOLTAGES - MEASURED FROM POINT INDICATED TO CHASSIS WITH A VTVM, ±10% NO SIGNAL INPUT.

SCHEMATIC DIAGRAM
HS-1055 & 1102 POWER SUPPLY & AMPLIFIER

MOTOROLA Model SP41, Chassis HS-1059

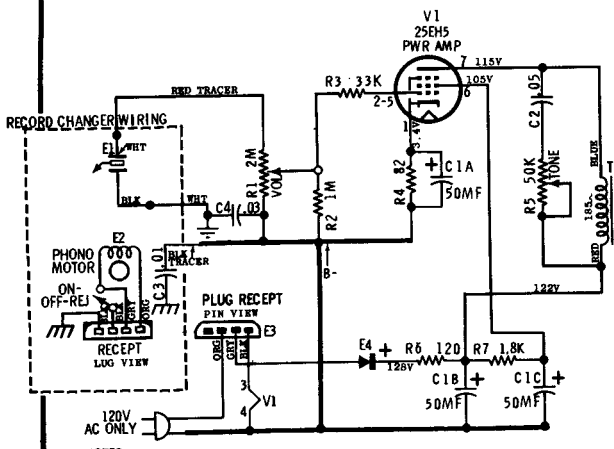

NOTES:
CAPACITORS - DECIMAL VALUES IN MF, ALL OTHERS IN MMF UNLESS OTHERWISE SPECIFIED.
VOLTAGES - MEASURED FROM POINT INDICATED TO B- WITH A VTVM.
CHASSIS = ⏚ ⏚ = RC GROUND

HS-1059 SCHEMATIC DIAGRAM

MOTOROLA Models SP42, SP43, Chassis HS-1061

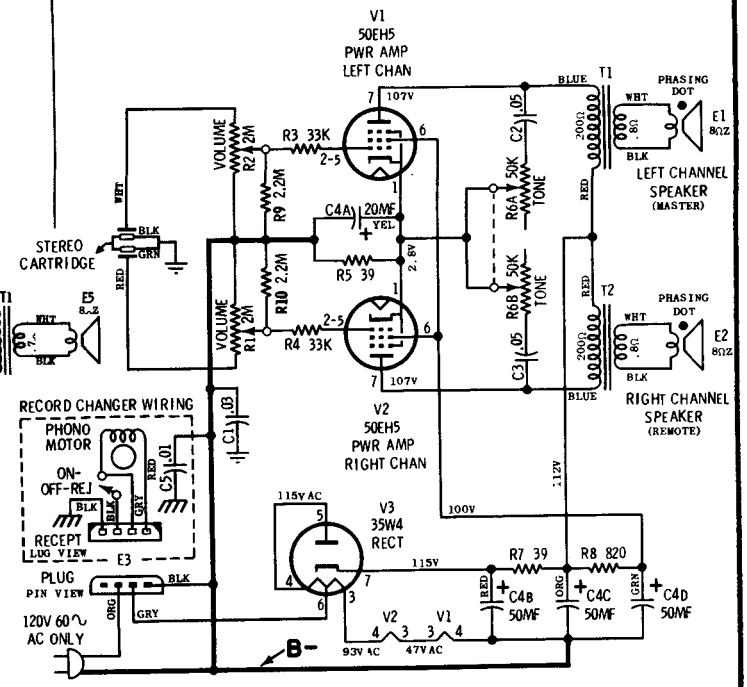

NOTES:
CAPACITORS - UNLESS OTHERWISE SPECIFIED, DECIMAL VALUES IN MF, ALL OTHERS IN MMF.
VOLTAGES - MEASURED FROM POINT INDICATED TO B- WITH A VTVM. ± 10% NO SIGNAL INPUT.
⏚ = CHASSIS GROUND ⏚ = RC GROUND

HS-1061 SCHEMATIC DIAGRAM

MOTOROLA MODEL SK119 CHASSIS HS-1192

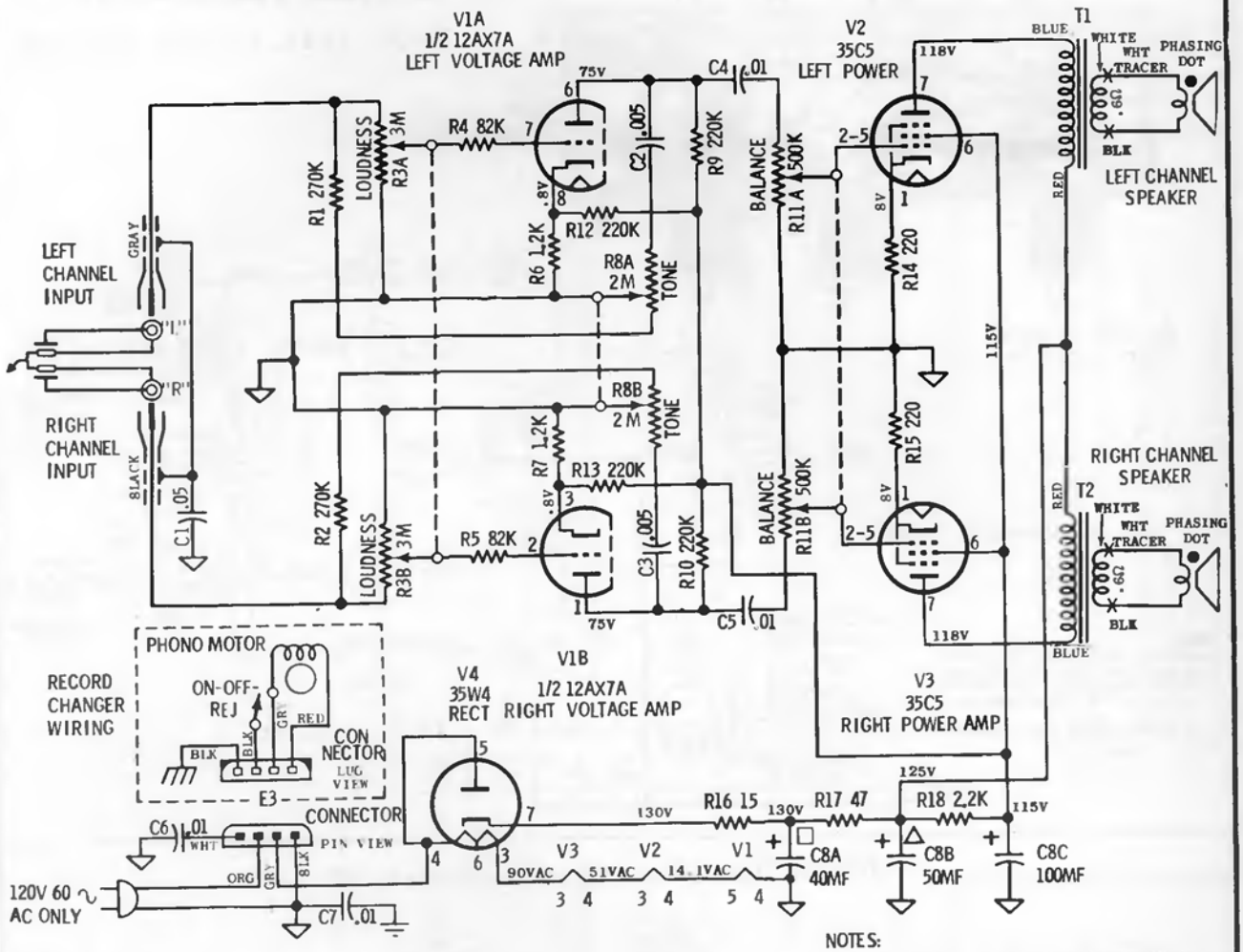

NOTES:
CAPACITORS - Unless otherwise specified decimal values in MF; all others in MMF.
VOLTAGES - Measured from point indicated to B- with a VTVM, + 10%. No signal in.

⏚=B- ⏚CHASSIS ⏚ •RECORD CHANGER FRAME

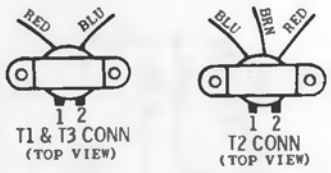

CHASSIS REMOVAL

1. From bottom of cabinet, disconnect all leads and cables connected to chassis.

2. From inside record changer compartment, remove 3 control knobs and loosen large hex nuts located under knobs; then grasp chassis from bottom and loosen nuts completely.

3. Remove chassis from cabinet.

RECORD CHANGER REMOVAL

1. Turn the 2 changer mounting screws clockwise until they are flush with the changer base.

2. From underside of changer, disconnect all cables from record changer.

3. Turn the mounting clips located at the ends of the mounting screws so they are parallel with the mounting screws, then lift changer out of cabinet

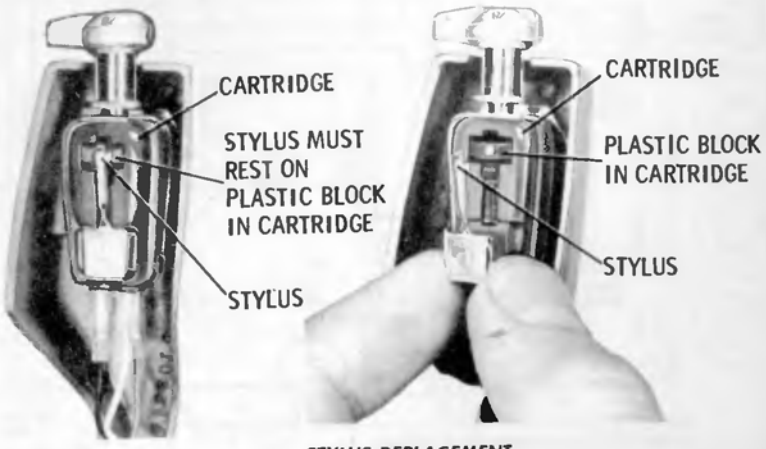

STYLUS REPLACEMENT

MOTOROLA

Model SP44, Chassis HS-1058

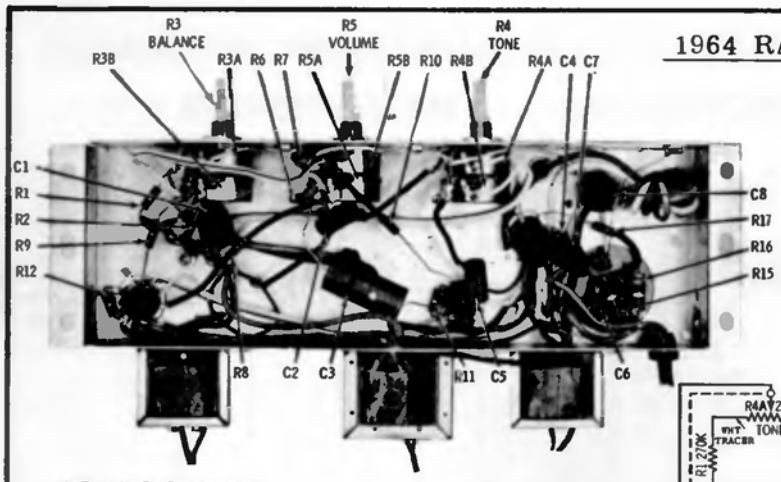

HS-1058 CHASSIS PARTS LOCATION

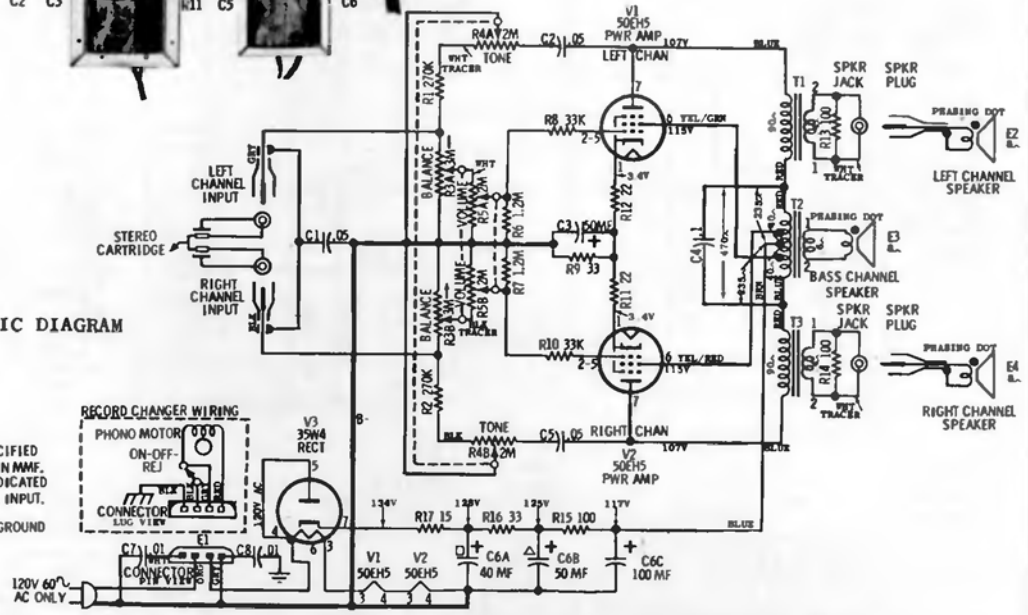

HS-1058 SCHEMATIC DIAGRAM

NOTES:
CAPACITORS - UNLESS OTHERWISE SPECIFIED DECIMAL VALUES IN MF. ALL OTHERS IN MMF.
VOLTAGES - MEASURED FROM POINT INDICATED TO B- WITH A VTVM. +10% NO SIGNAL INPUT.
= CHASSIS GROUND = RC GROUND
= B-

MOTOROLA Model SP44-1, Chassis HS-1125

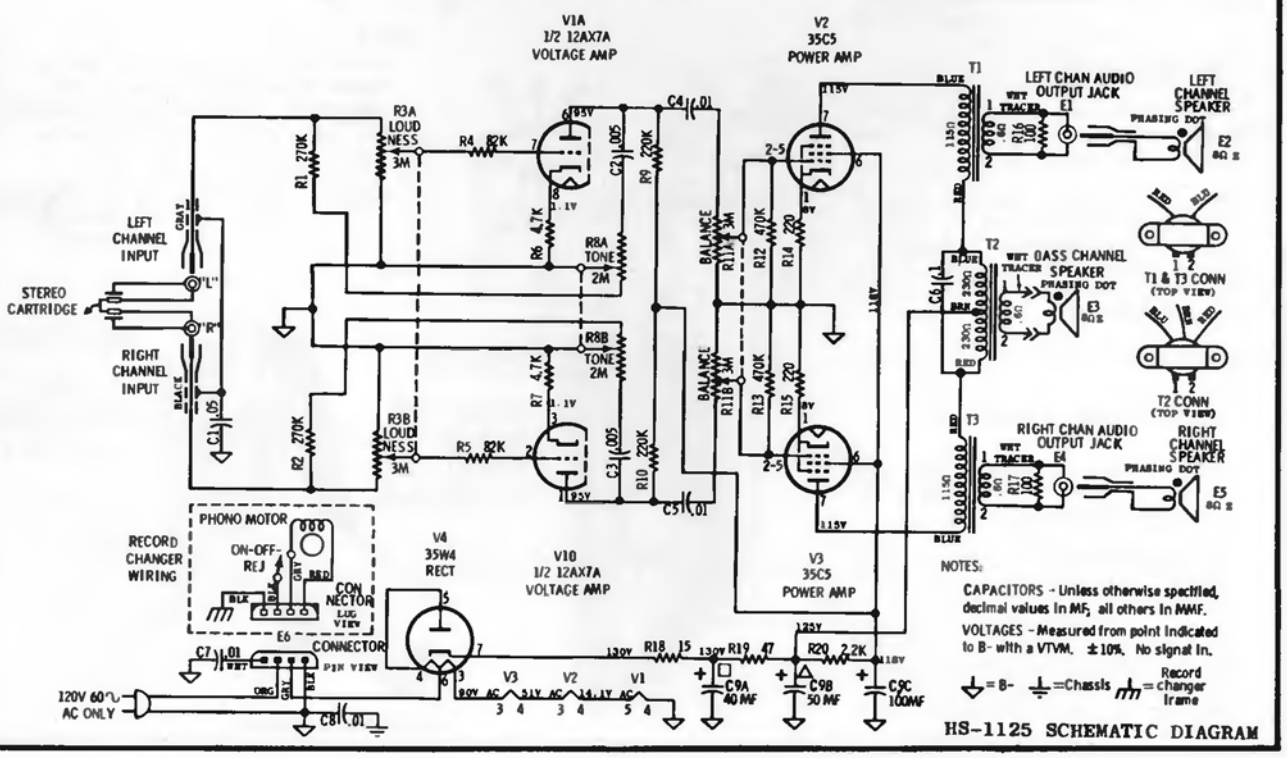

NOTES:
CAPACITORS - Unless otherwise specified, decimal values in MF, all others in MMF.
VOLTAGES - Measured from point indicated to B- with a VTVM. ±10%. No signal in.
= B- = Chassis = Record changer frame

HS-1125 SCHEMATIC DIAGRAM

Packard Bell

Model RC-1S, using Chassis 8HF1 or 8HF2
(Continued on the next page)

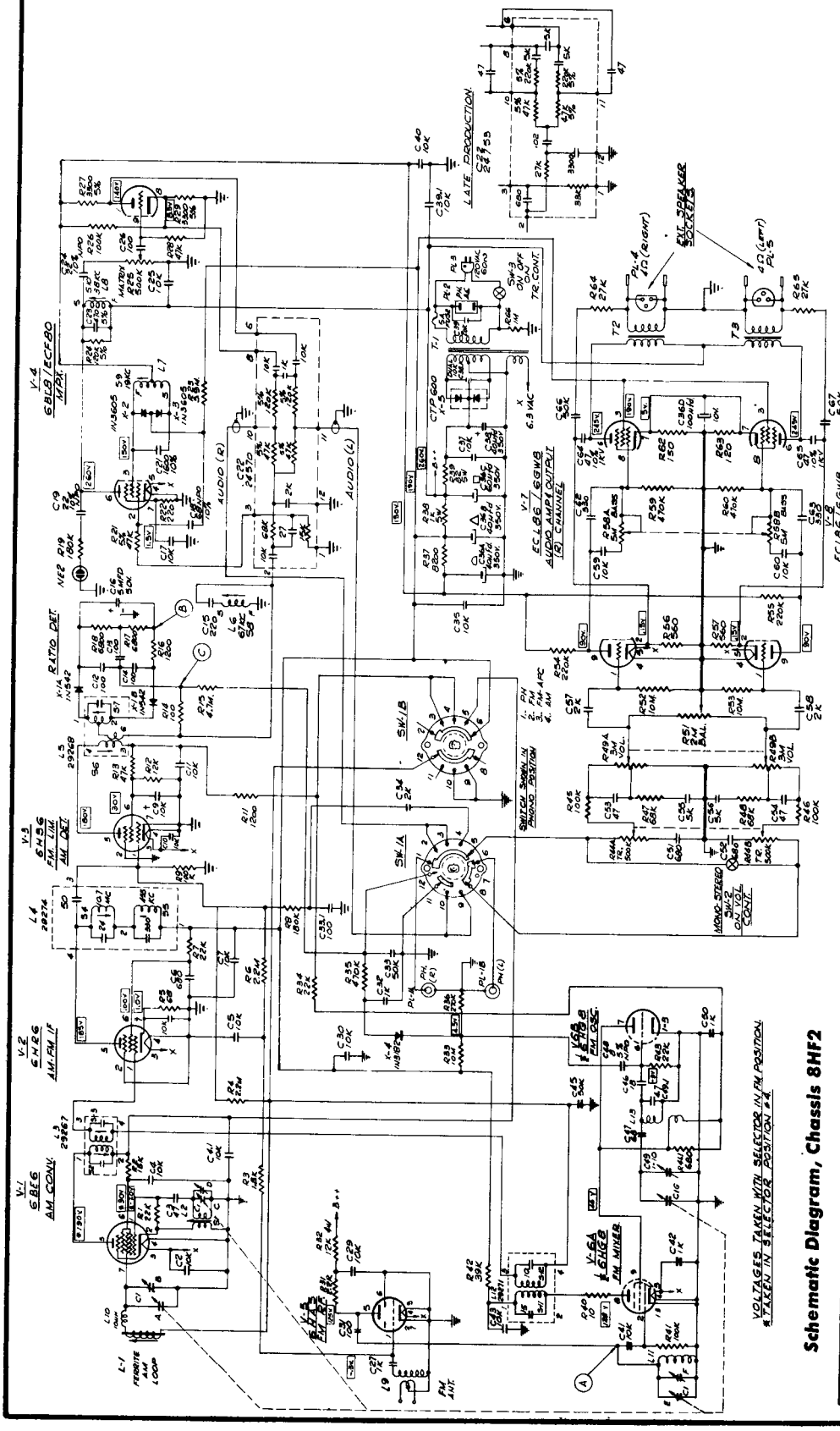

Schematic Diagram, Chassis 8HF2

Intermediate Frequencies:
AM Radio: 455 kc
FM Radio: 10.7 mc

Model RC-1S contains either chassis **8HF1** or chassis **8HF2**. These chassis are similar, each being an AM/FM radio receiver with built-in multiplex circuitry.

The major difference between the 8HF1 and 8HF2 is that the tube types of V-5 and V-6 differ, along with the associated circuitry.

See schematics for details of differences.

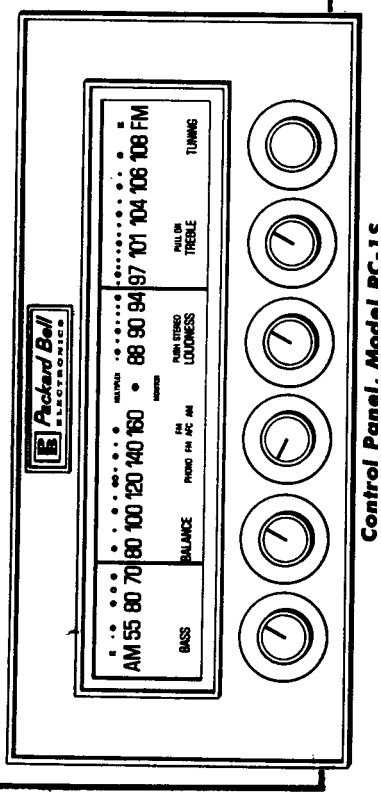

Control Panel, Model RC-1S

Packard Bell

Model RC-1S, Chassis 8HF1 or 8HF2
(Continued from preceding page)

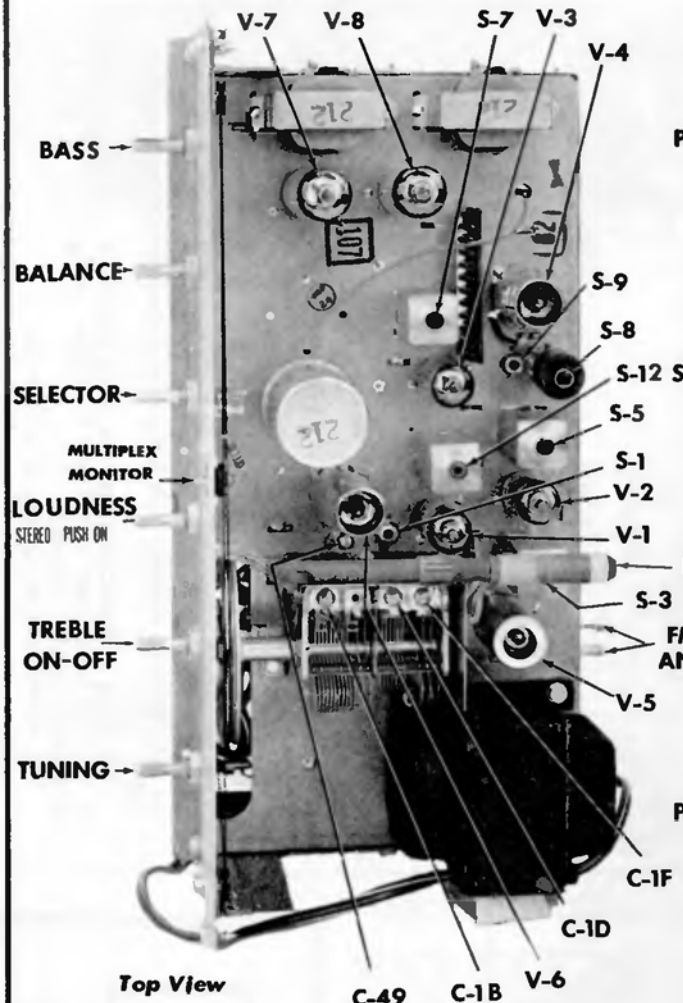

Top View

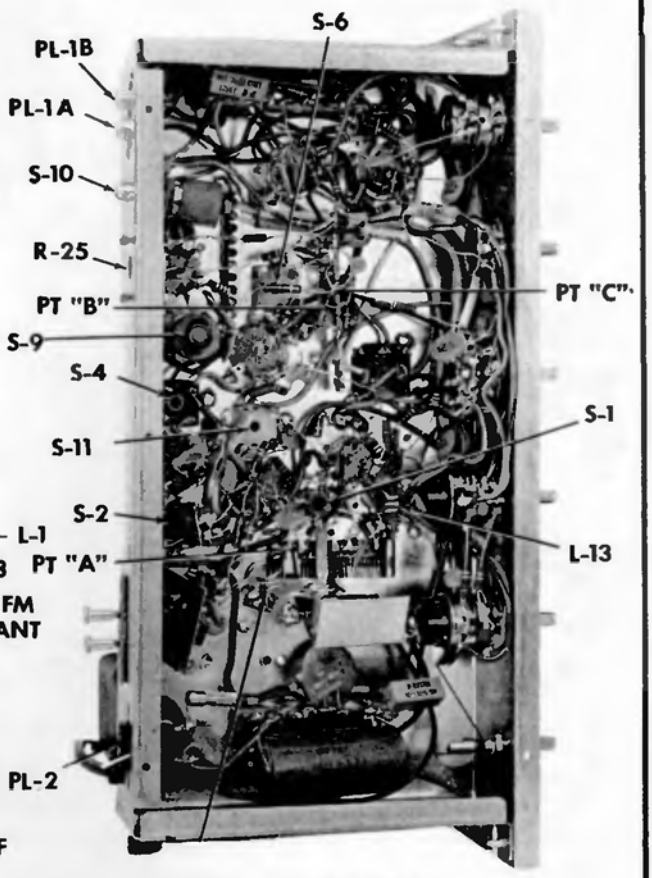

Bottom View

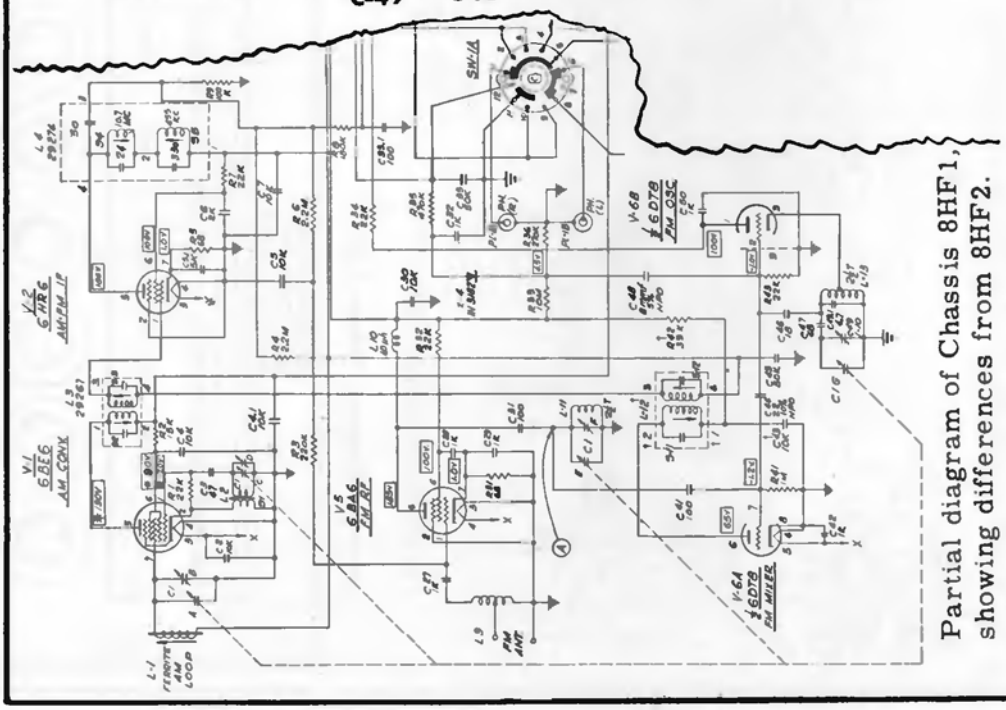

Partial diagram of Chassis 8HF1, showing differences from 8HF2.

PRODUCTION MODIFICATION ON 8HF1

Capacitors C-9 and C-43 were changed from 2000 mmf to 10,000 mmf.

Resistor R-42 was changed from 220,000 ohms to 39,000 ohms.

Chassis stamped with the number 4104 (or a higher number) contain the production modification described above.

MARKING FOR 8HF2 CHASSIS:

Models containing chassis 8HF2 are stamped with the number 4116.

PHILCO

TRANSISTOR PORTABLE
MODEL T-67

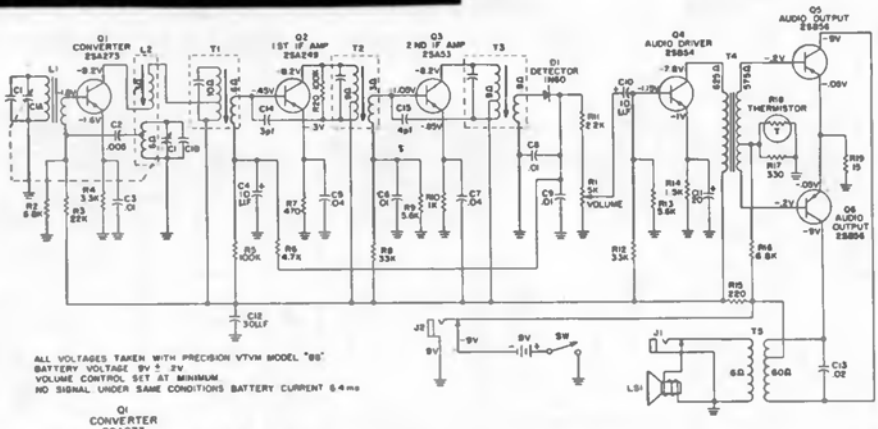

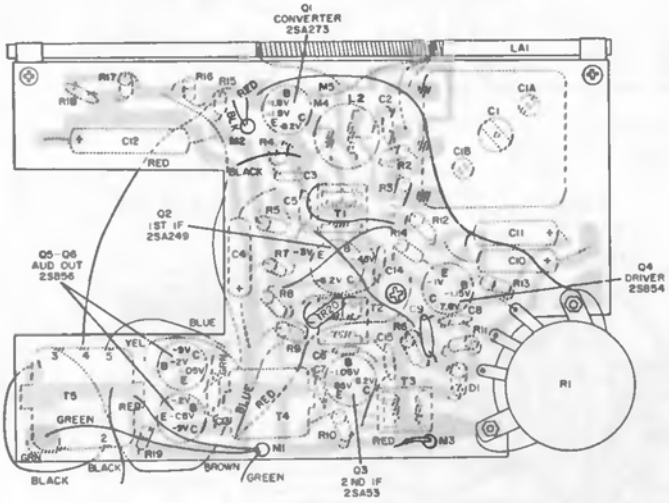

Foil Side of Perma-Circuit Panel

PANEL REMOVAL - To remove panel from cabinet, lift out jack assembly and remove screw in panel located at D5 (see graph). Panel may now be lifted out; speaker will remain in cabinet.

ALIGNMENT: Allow the test equipment at least 15 minutes to warm up before starting the alignment procedure. Connect an a-c VTVM or oscilloscope across the speaker voice coil. Use an AM R-F signal generator connected as indicated in chart. Keep generator output low enough to prevent A.G.C. overload.

ALIGNMENT CHART

SIGNAL GENERATOR			RADIO		
STEP	CONNECTION TO RADIO	DIAL SETTING	DIAL SETTING	SPECIAL INSTRUCTIONS	ADJUST
1	Use radiating loop (see note 1 below)	455KC	1600KC gang fully open	Adjust for maximum output in order given	T3-3rd I-F T2-2nd I-F T1-1st I-F
2	Same as Step 1	540KC	540KC	Adjust for maximum output. Adjust L1 by sliding coil on core and waxing into position of maximum output. Rock tuning gang while adjusting L2.	L2-osc. L1-ant. coil
3	Same as Step 1	1600KC	1600KC	Adjust for maximum output.	C1A-ant. trimmer
4	Same as Step 1	1400KC	1400KC	Adjust for maximum output.	C1B-osc. trimmer
5	Repeat last three steps.				

NOTE 1: Use a 6 to 8 turn, 6-inch diameter loop made up of insulated wire. Connect to generator terminals and loose couple to radio antenna.

PHILCO Transistor Portable Model T-68

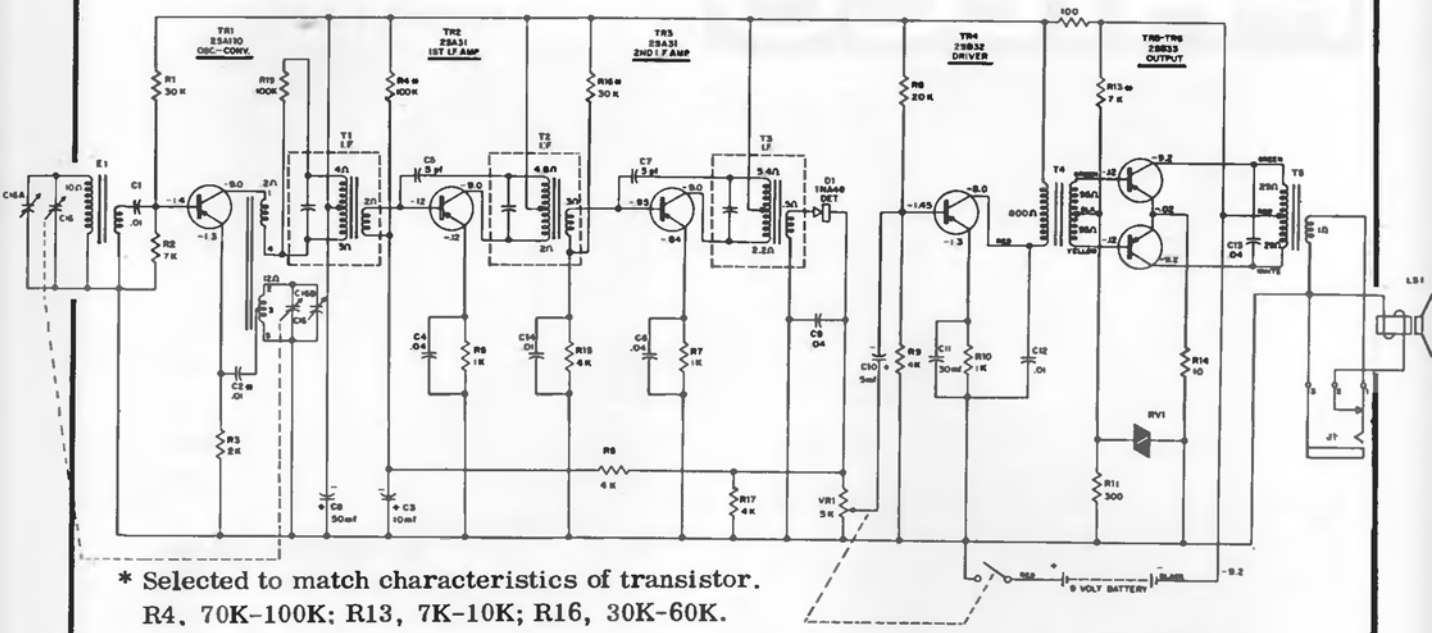

* Selected to match characteristics of transistor.
R4, 70K-100K; R13, 7K-10K; R16, 30K-60K.

I. F. 455 KC.

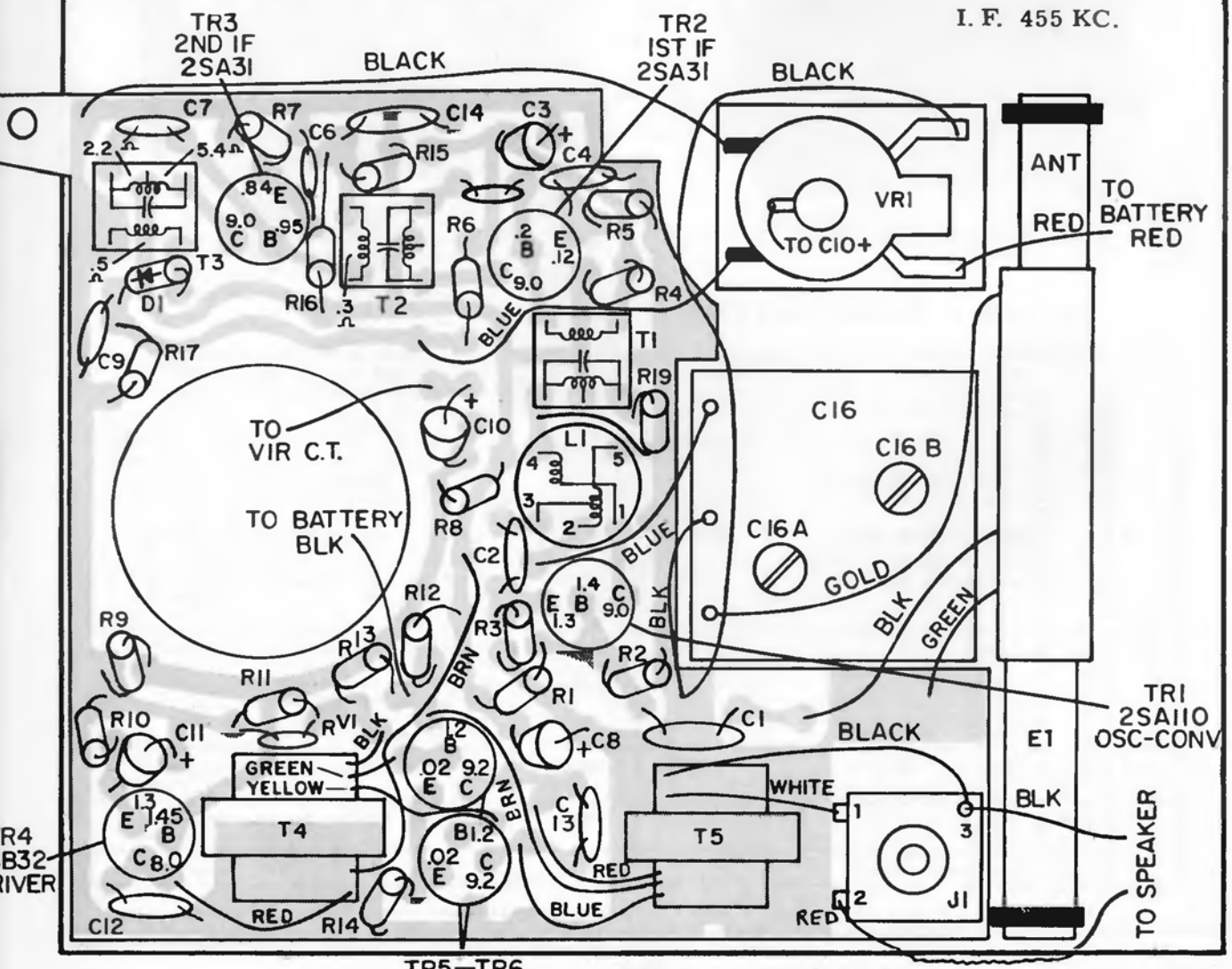

Panel Bottom View, Copperplate Side

PHILCO

PORTABLE TRANSISTOR RADIO — MODEL T-84

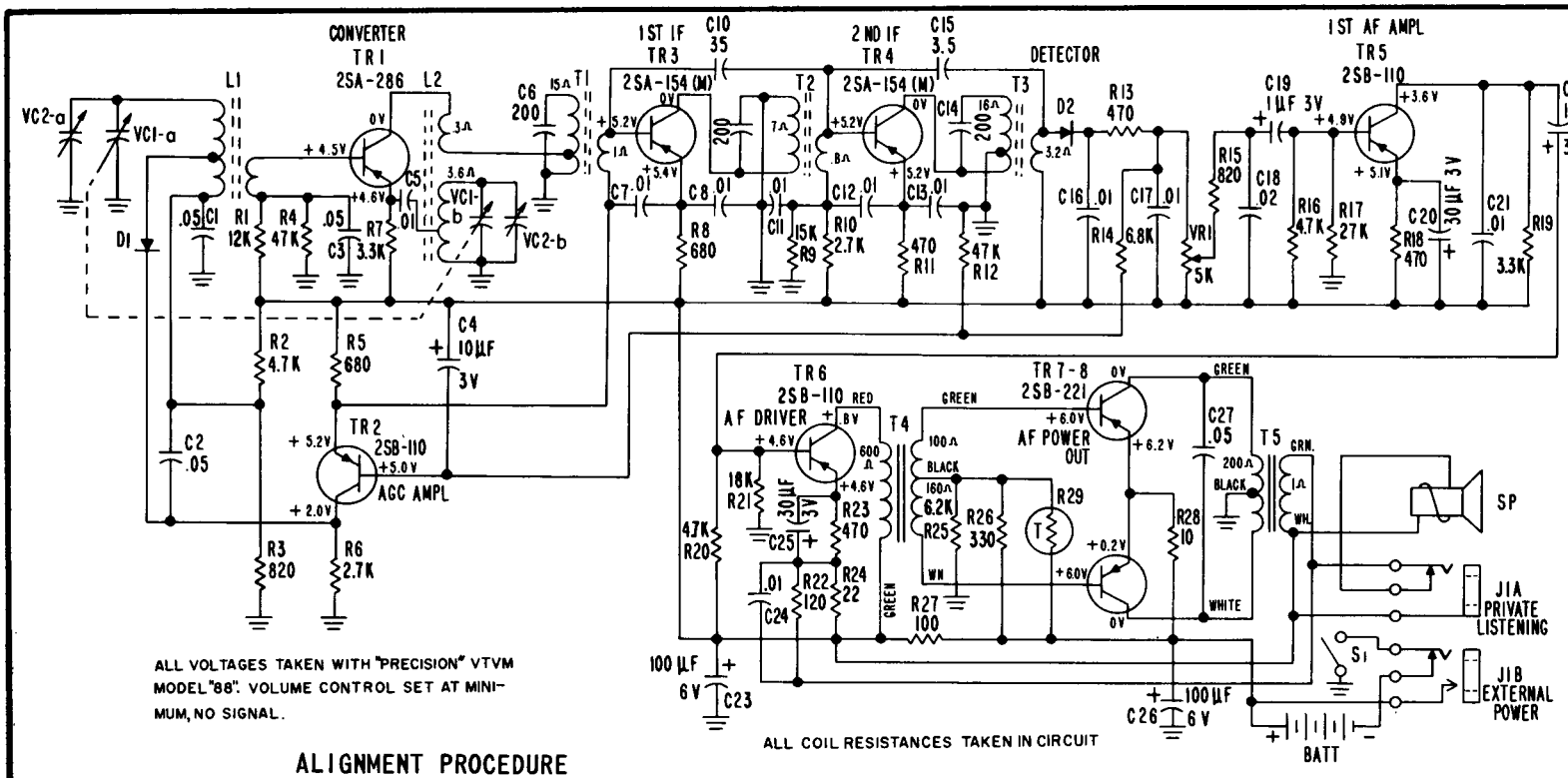

ALL VOLTAGES TAKEN WITH "PRECISION" VTVM MODEL "88". VOLUME CONTROL SET AT MINIMUM, NO SIGNAL.

ALL COIL RESISTANCES TAKEN IN CIRCUIT

ALIGNMENT PROCEDURE

Allow the test equipment at least fifteen (15) minutes to warm up before starting the alignment procedure. Connect an a-c VTVM or oscilloscope across the speaker voice coil. Use an AM-R-F signal generator connected to a test loop placed in close proximity to the receiver antenna. Keep generator output low enough to prevent A.V.C. overload. Set volume at maximum.

STEP	SIGNAL GENERATOR SETTING	DIAL INDICATOR SETTING	ADJUST FOR MAX. OUTPUT
1	455KC	Quiet point near 1600KC	I-F transformers T3, T2, T1
2	1600KC	1600KC	CV2-b (osc. trimmer)
3	1400KC	1400KC	CV2-a (RF trimmer)
4	540KC	540KC	L2 (osc. -slug)
5	600KC	600KC	L1 (ant.)
6	Repeat steps 2, 3, 4 and 5.		

PANEL REMOVAL -

The complete panel, tuning dial and knob assembly is removed by extracting three Phillips head screws located as follows: 1 - single screw on right end of panel (viewing from rear); 2 - screw holding metallic mounting assembly tab located between volume control knob and tuning dial; 3 - screw holding metallic mounting assembly tab located between tuning knob and case bottom. Note that it is advisable to slide the external power jack free of the cabinet to prevent strain on the connecting leads.

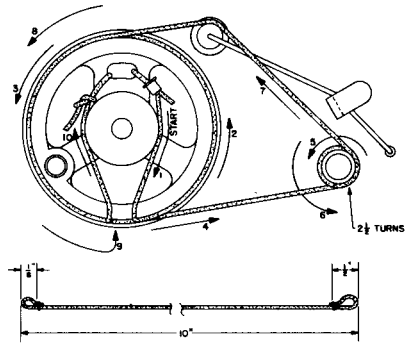

Dial Cord - Model T-84

PHILCO

TRANSISTOR PORTABLE MODEL T-81

(Continued on the next page, at right)

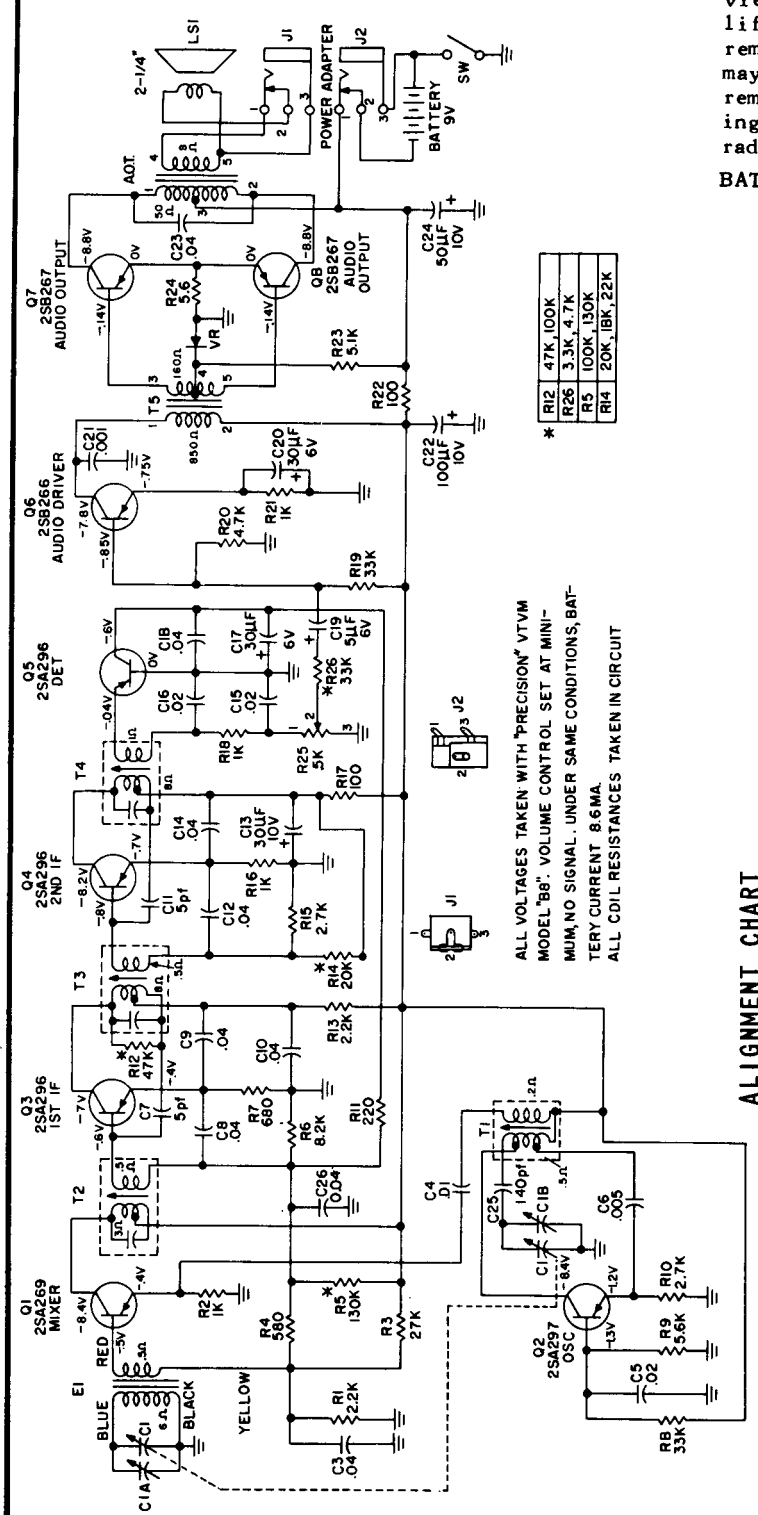

Panel Removal - To remove panel from cabinet, remove three Phillips head screws located at A1, C9 and G1 (see bottom component location view). Panel and jack assembly may now be lifted out simultaneously. The speaker will remain in the cabinet. Jack assembly and panel may not be removed separately. They must be removed together. Remove jack assembly by prying up side of jack assembly toward front of radio.

BATTERY SUPPLY - One 9 volt type 216 battery. Special receptacle provided for connecting a line connected power supply. Special receptacle automatically disconnects internal battery with use of external supply.

ALIGNMENT CHART

SIGNAL GENERATOR			RADIO		
STEP	CONNECTION TO RADIO	DIAL SETTING	DIAL SETTING	SPECIAL INSTRUCTIONS	ADJUST
1	To base of mixer, Q1 through a .01 µfd cap.	455KC	Quietpoint near 1600KC	Adjust for max. output in order given.	T4-3rd I-F T3-2nd I-F T2-1st I-F
2	Radiating loop (See Note below)	600KC	600KC	Adjust for max. output.	T1-osc.
3	Radiating loop	1500KC	1500KC	Adjust for max. output.	C1B-osc. trimmer
4	Repeat steps 2 and 3 until no further improvement is obtained.				
5	Radiating loop	600KC	600KC	Adjust for max. output by sliding ant. coil on core.	E1 - antenna
6	Radiating loop	1500KC	1500KC	Adjust for maximum output.	C1A - ant. trimmer
7	Repeat steps 5 and 6 until no further improvement is obtained.				

Note: For radiating loop, use a 6 to 8 turn, 6-inch diameter loop made up of insulated wire. Connect to generator terminals and place about one foot from antenna coil.

PHILCO
MODEL T-81

(Continued from preceding page at left)

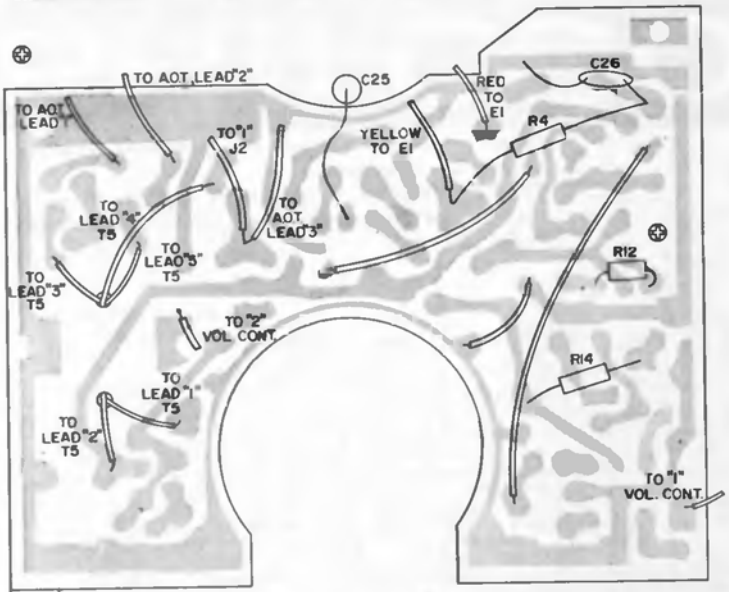

Foil Side of Perma-circuit Panel, Bottom Component Location

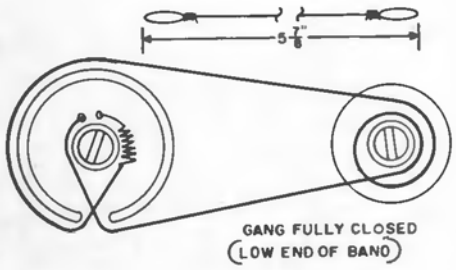

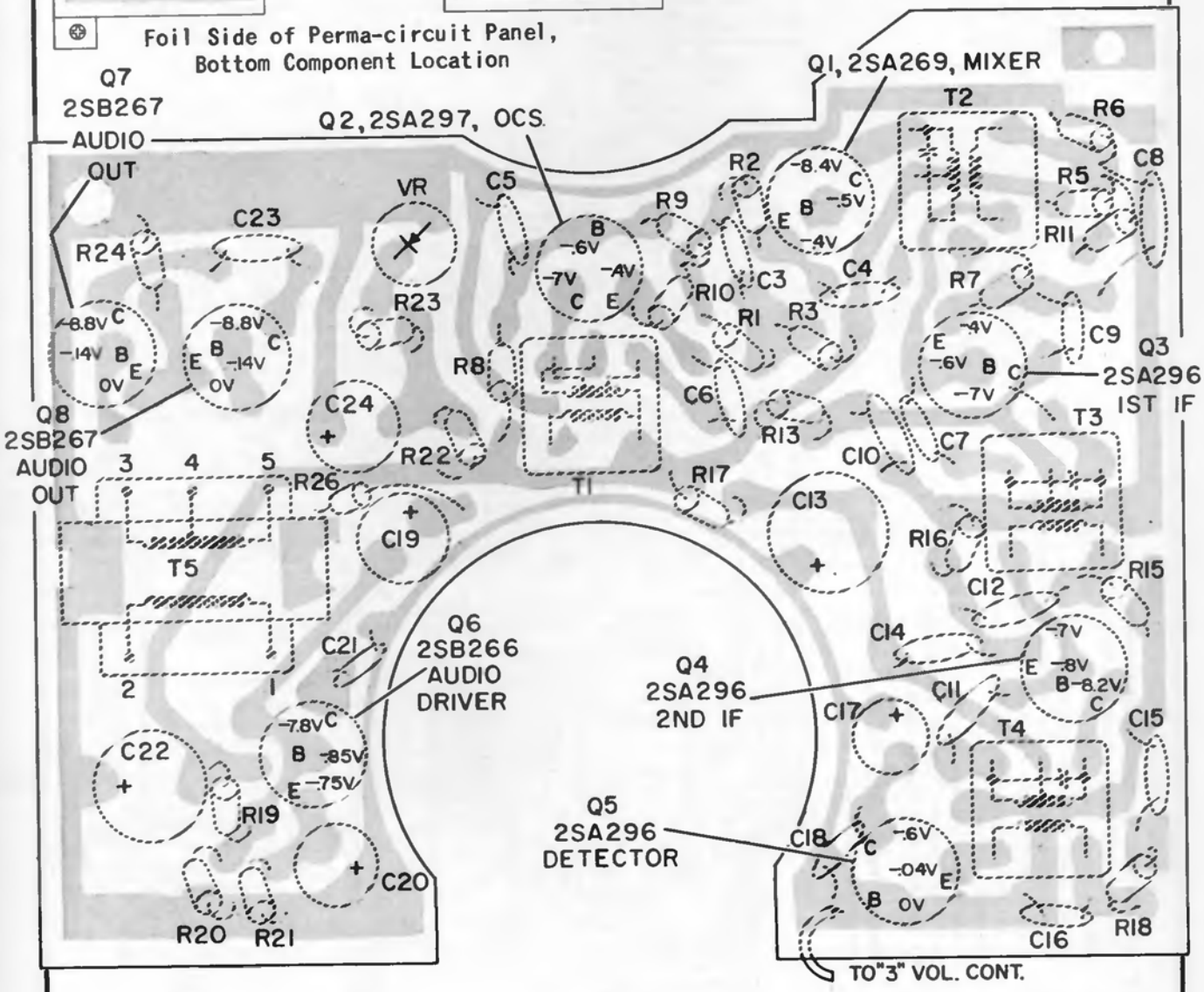

Foil Side of Perma-circuit Panel, Top Component Location

PHILCO

TRANSISTOR PORTABLE
MODEL T-90

FREQUENCY COVERAGE: 520KC to 1650KC
INTERMEDIATE FREQUENCY: 455KC
ANTENNA: Self-contained ferrite loop
SPEAKER: 2-3/4 inch PM 10 ohms V.C. impedance. Jack provided for optional private listening attachment.
BATTERY SUPPLY: 4 penlight cells, 6 volt supply, battery type "AA", P-15 or mercury type "AA" P-9

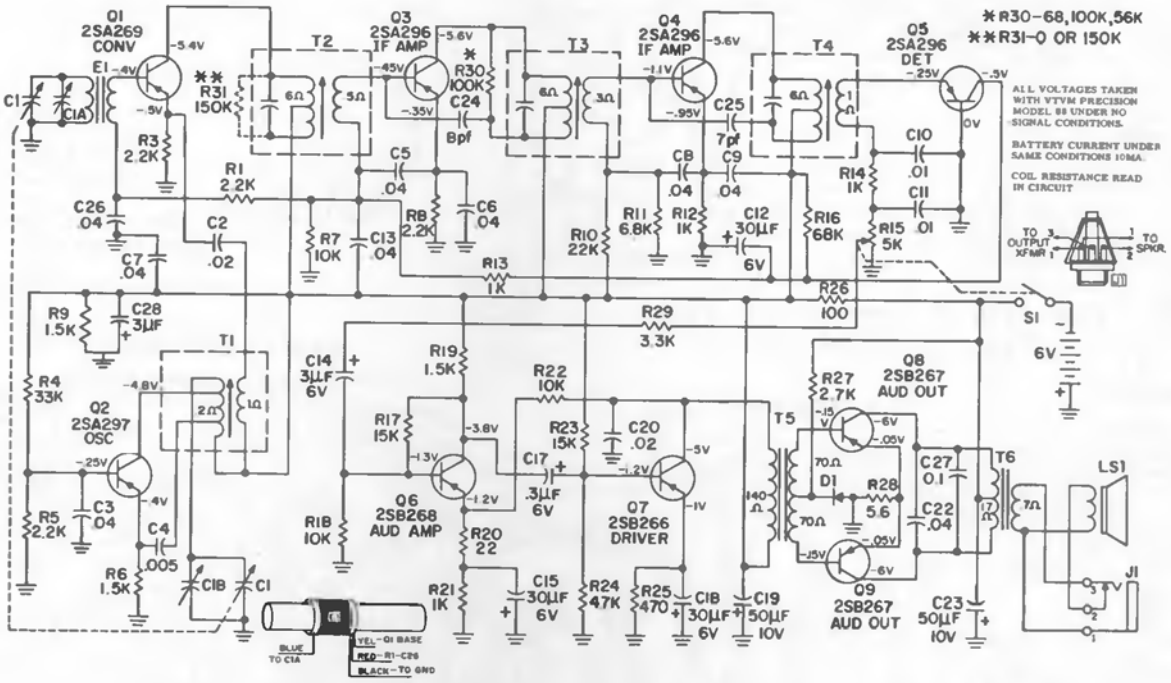

PERMA-CIRCUIT PANEL REMOVAL

1. Remove battery compartment cover (bottom of case) and remove battery holder.
2. Remove two screws located on top of back cover, push out back cover from inside.
3. Remove decorative plate from center of tuning knob (turn counter-clockwise) and unscrew tuning knob spacer. Tuning knob can now be removed.
4. Remove four screws holding perma-circuit panel to cabinet (graph locations D3, B6, K1 and K8) and remove panel.

Speaker will remain in cabinet when panel is removed.

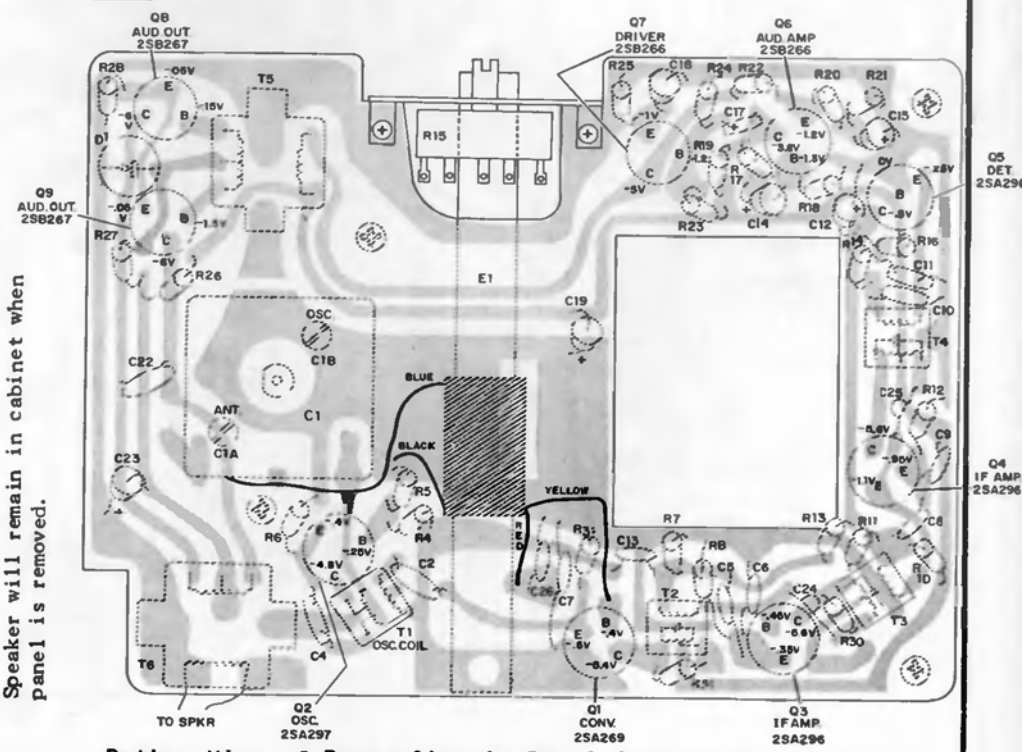

Bottom View of Perma-Circuit Panel Showing Parts Location

PHILCO

TRANSISTOR PORTABLE
MODEL T-703 CODE 124

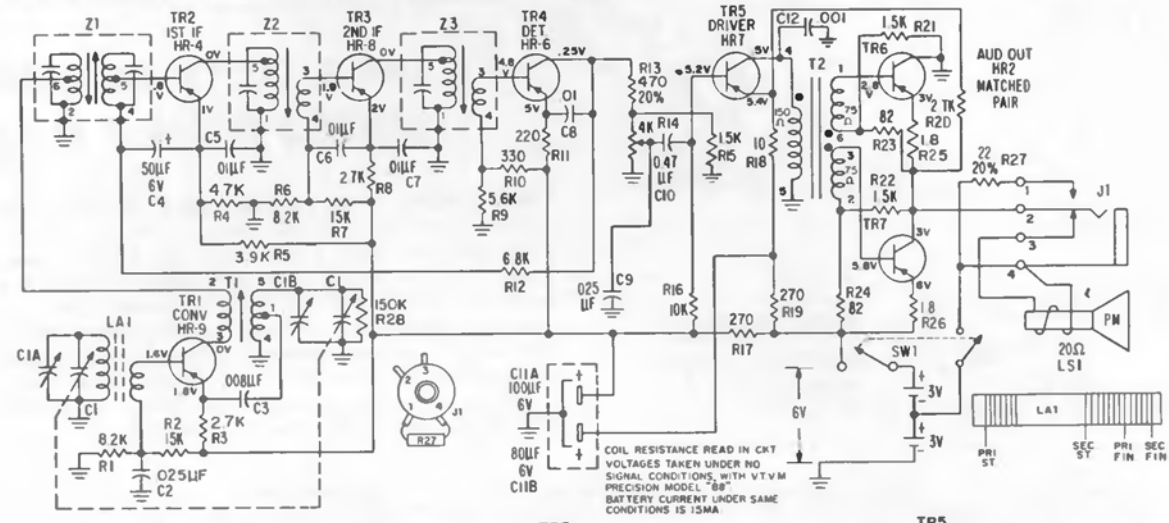

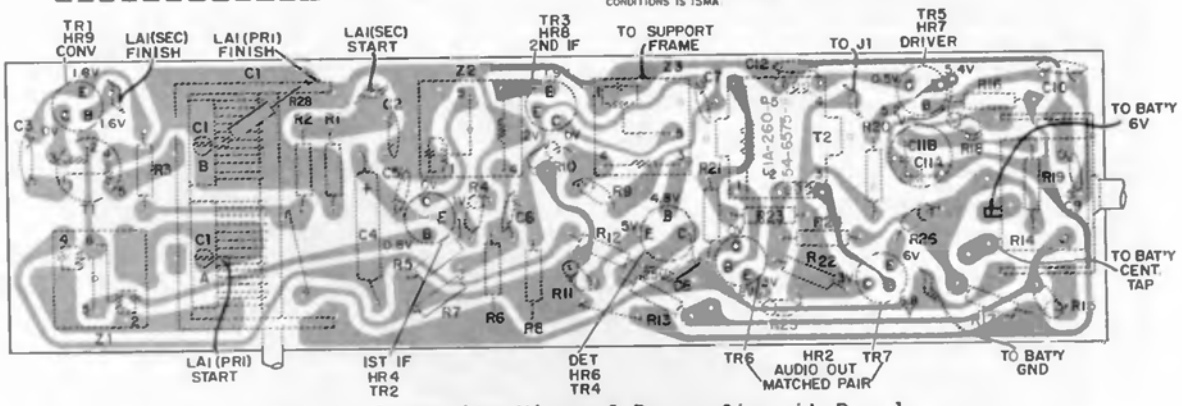

Bottom Composite View of Perma-Circuit Panel

ALIGNMENT PROCEDURE

Allow the test equipment to warm up for fifteen minutes before starting the alignment procedure. Connect the output indicator (a-c voltmeter, or an oscilloscope) across the voice-coil terminals. Use an AM r-f signal generator. Connect the ground lead to chassis, and connect the output lead as indicated in the alignment chart. Attenuate the signal-generator output throughout the alignment so as to maintain the output level below 1 volt.

SIGNAL GENERATOR			RADIO		
STEP	CONNECTION TO RADIO	DIAL SETTING	DIAL SETTING	SPECIAL INSTRUCTIONS	ADJUST
1	Connect signal generator through a .1-uf. condenser to ant. section of gang.	455 kc.	Tuning gang fully open.	Adjust for maximum output in order given.	Z3 - 3rd i-f Z2 - 2nd i-f Z1 - 1st i-f
2	Use radiating loop. (See NOTE 1 below)	600 kc.	600 kc.	Adjust for maximum output. Rock tuning gang while making this adjustment.	T1 - osc. core
3	Same as step 2.	1620 kc.	1620 kc. (Tuning gang fully open)	Adjust for maximum output.	C1B - osc. trimmer
4	Same as step 2.	1400 kc	1400 kc.	Adjust for maximum output.	C1A - antenna trimmer
5	Repeat steps 2, 3 and 4 until no further improvement is obtained. Always stop on step 4.				

NOTE 1. Use a 6-to-8-turn, 6-inch-diameter loop made up of insulated wire. Connect to generator terminals, and place about one foot from radio loop.

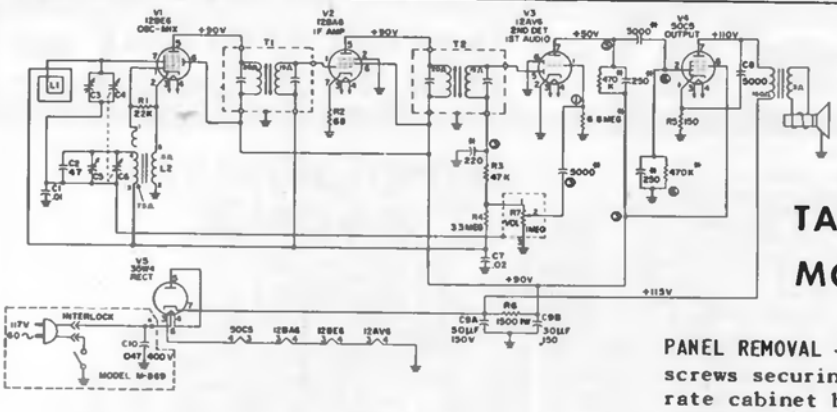

PHILCO

TABLE/CLOCK AM RADIO MODELS M-709 & M-869

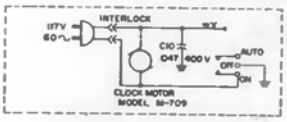

*NOTE
ALL COMPONENTS MARKED WITH AN ASTERISK ARE CONTAINED IN ONE UNIT, NI CONNECTIONS ARE ENCIRCLED NUMBERS

ALL VOLTAGES AND RESISTANCES TAKEN WITH "PRECISION" VTVM MODEL "88" VOLUME CONTROL SET AT MINIMUM, NO SIGNAL IN.

RESISTANCES TAKEN WITH COILS AND TRANSFORMERS IN CIRCUIT

PANEL REMOVAL - To remove panel, unscrew two screws securing cabinet back to front. Separate cabinet back from front by prying away front on line cord side of cabinet. Separate cabinet, being careful not to break time and alarm set knob and antenna leads. Remove knobs and nut on volume control. Remove two screws located at E3 and D10 (see parts location). Unsolder speaker, antenna and clock wires (M-709 only). Panel may now be removed.

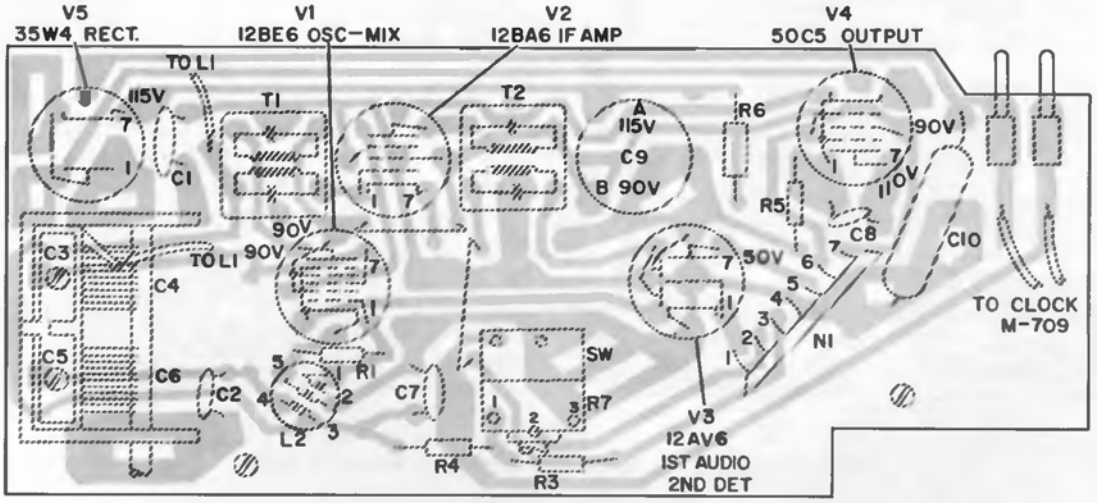

Component Location, Foil Side of Perma-Circuit Panel

ALIGNMENT - To eliminate shock hazard, use an isolation transformer between radio chassis and a-c power outlet. Allow radio and test equipment about 15 minutes to warm up before starting alignment. Connect an a-c VTVM across the speaker voice coil. Use an AM R-F signal generator connected as indicated in chart. Set volume control to maximum no signal output. Keep generator output as low as possible.

ALIGNMENT CHART

SIGNAL GENERATOR			RADIO		
STEP	CONNECTION TO RADIO	DIAL SETTING	DIAL SETTING	SPECIAL INSTRUCTIONS	ADJUST
1	R-F section of gang through a .1mf cap.	455KC	Gang fully open	Adjust for max. output in order given.	T1-bot. & top T2-bot. & top
2	Use radiated signal (See note)	600KC	600KC	Adjust for max. output; rock tuning gang while making adjustment.	L1-osc.
3	Use radiated signal	1650KC	Gang fully open	Adjust for max. output.	C5-osc. trim.
4	Use radiated signal	1500KC	1500KC	Adjust for max. output.	C3-ant. trim.
5	Repeat steps 2, 3 and 4 until no further improvement is obtained.				

NOTE: Use a 6 to 8 turn, 6-inch diameter loop made up of insulated wire. Connect to generator terminals, and place about one foot from radio loop.

PHILCO Models M-712, M-714, M-715, M-716, M-871, M-872, M-874, M-876

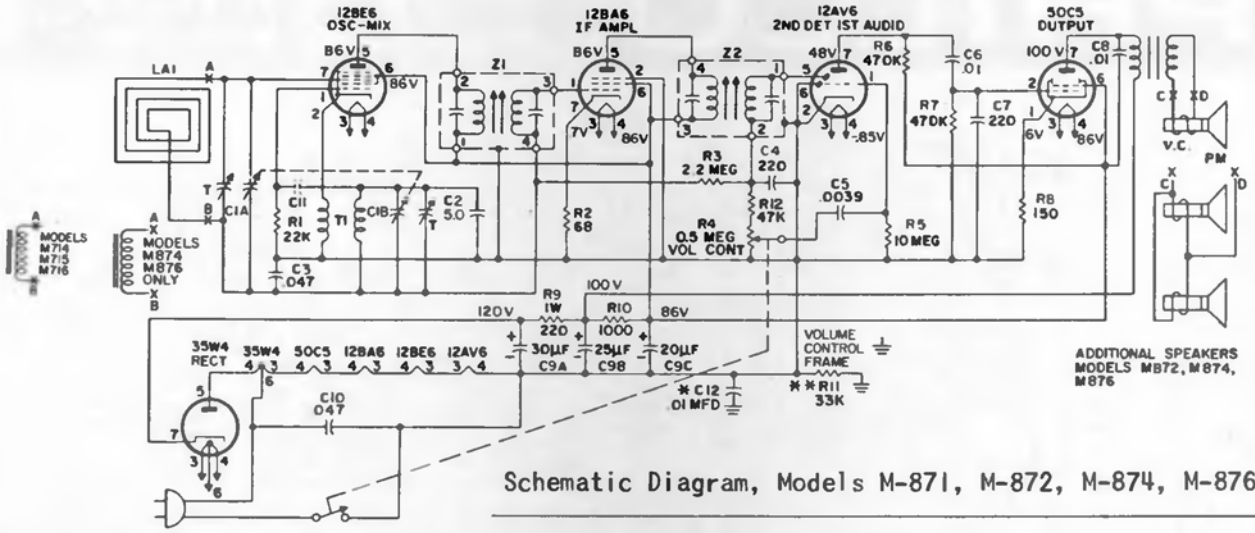

Schematic Diagram, Models M-871, M-872, M-874, M-876

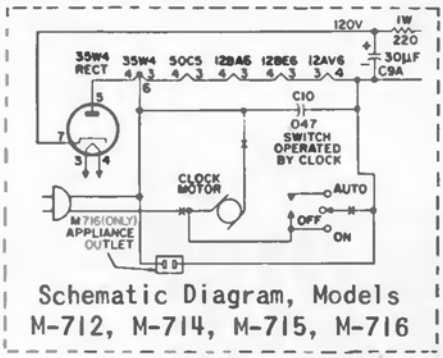

Schematic Diagram, Models M-712, M-714, M-715, M-716

I.F. 455 KC.

C11 IS PART OF OSC. COIL
* MODELS M876, M716.
** MODELS M871, M872, M874, M712, M714, M715.

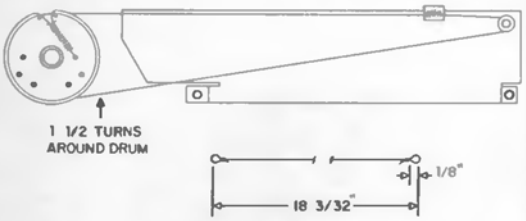

Dial Cord Stringing Models M-714, M-715, M-874

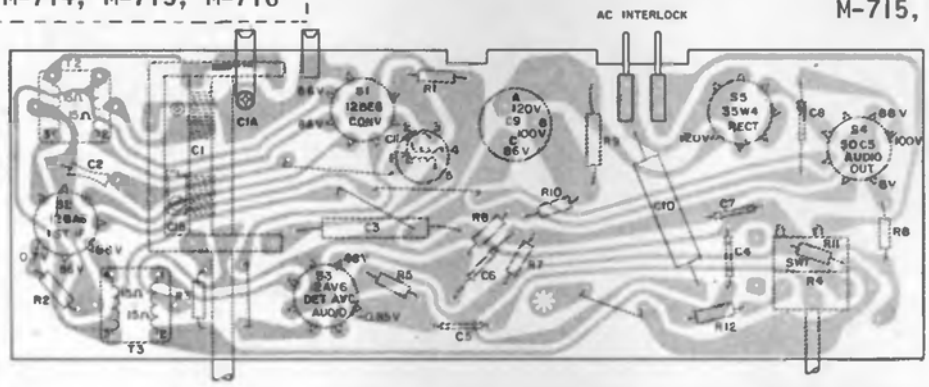

Perma-Circuit Panel, AM Models M-712, M-871, M-872, Bottom View

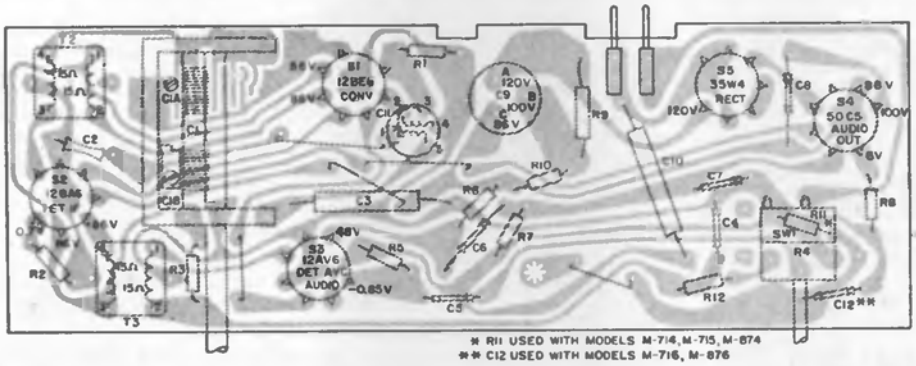

Perma-Circuit Panel, AM Models M-714, M-715, M-716, M-874, M-876, Bottom View

PHILCO

TABLE/CLOCK AM-FM RADIOS M-719, M-798, M-936, M-937, M-938, M-939

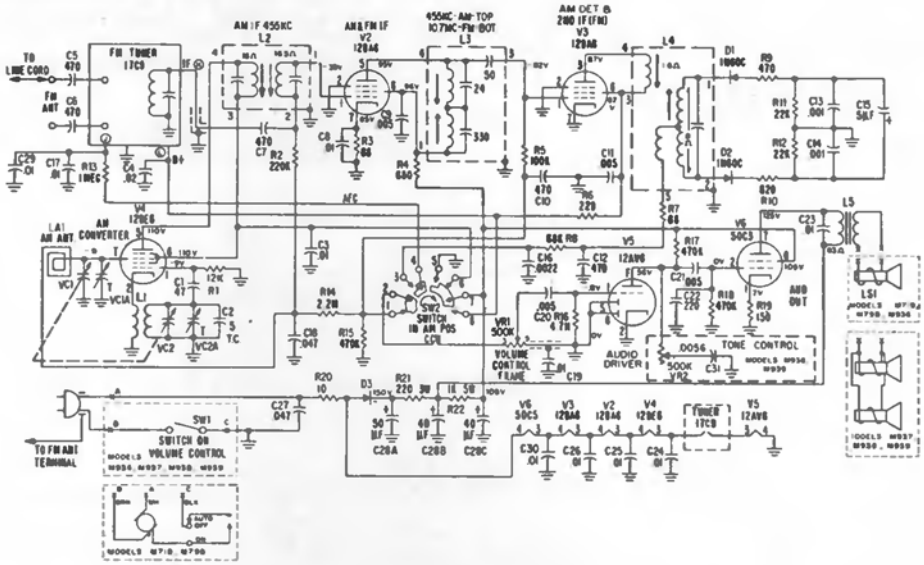

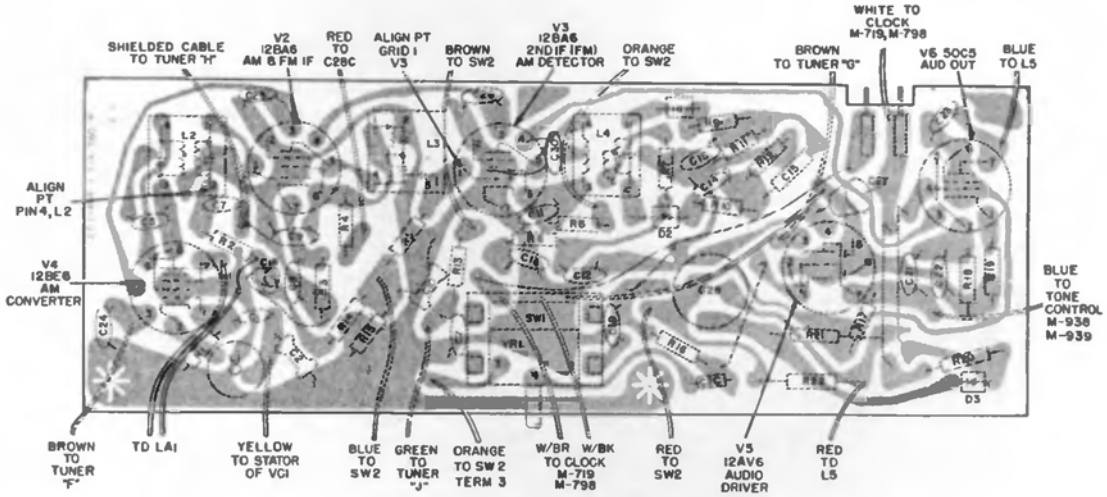

Perma-Circuit Panel, AM-FM Models, Bottom View

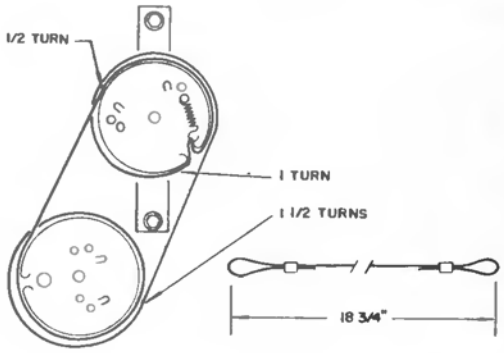

Tuner Dial Cord Stringing
FM Models

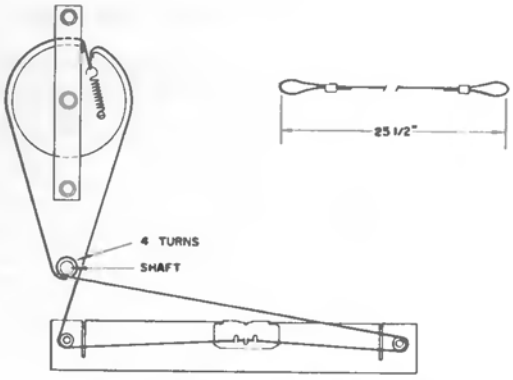

Main Dial Cord Stringing
FM Models

PHILCO

TRANSISTOR PORTABLE
MODEL T-902, CODE 128

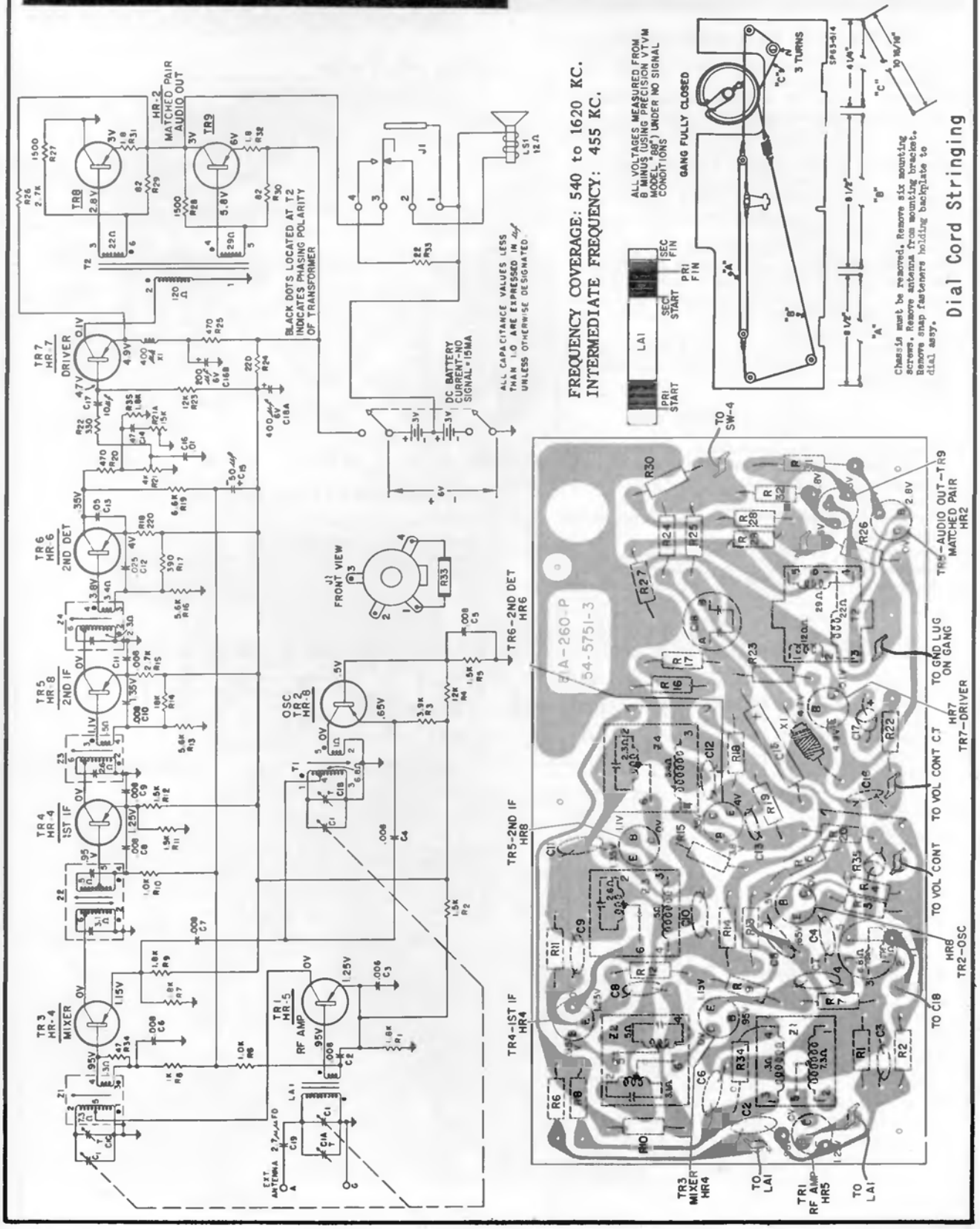

Base Layout - Bottom View of Perma-Circuit Panel

PHILCO

AM-FM TRANSISTOR PORTABLE MODEL T-907

(Material below and the next two pages)

REMOVAL OF FM TUNER PANEL

1. Remove chassis from cabinet. See "Chassis Disassembly" instructions.
2. Remove 2 magnecore antenna mounting clamps and swing magnecore out of the way.
3. Loosen 2 FM tuner shield screws and remove shield.
4. Disconnect FM tuner leads from their points of origin. See FM tuner perma-circuit illustration. Do Not attempt to disconnect leads from the tuner panel. Bring free leads up through hole in main perma-circuit panel.
5. Unsolder "Tuning Gang Grounds" (See FM tuner perma-circuit illustration), separate and straighten lugs. Be sure lugs are free of excess solder.
6. Unsolder "Shield Grounds" from rear or outside of back shield. Be sure lugs are clean and free in the shield holes.
7. While alternately heating the gang terminals C1-R-F and C1-osc., gently pry panel out using a thin bladed tool.

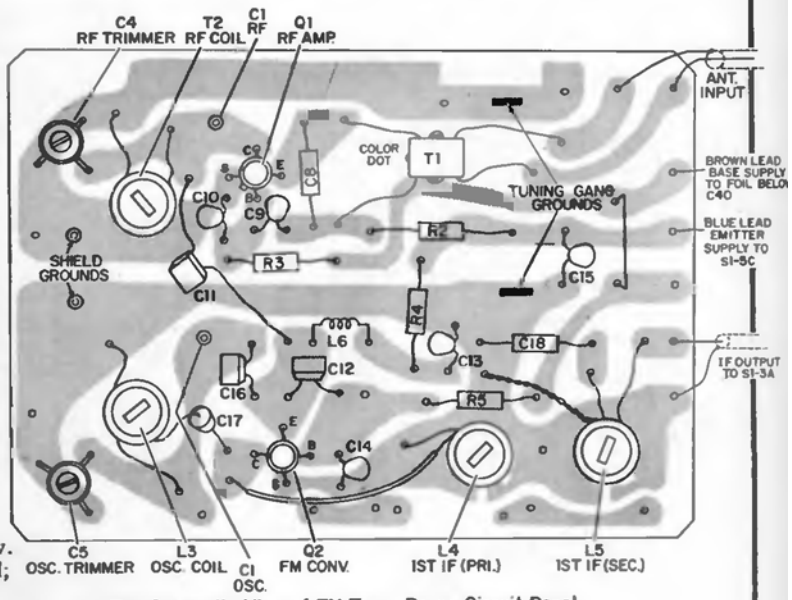

Top Composite View of FM Tuner Perma-Circuit Panel

CHASSIS DISASSEMBLY

1. Remove back by loosening back retaining screw. CAUTION - Monopole antenna lead is connected; disconnect lead from antenna.
2. Remove knobs.
3. Remove nut holding band switch clamp and remove clamp.
4. Remove back mounting threaded post.
5. Remove nut at volume control end of back plate.
6. Remove nut at left end of FM R-F sub-assembly.
7. Remove nut in front of 1st I-F, T3.
8. Remove panel, dial, switch and mtg. plate assembly.

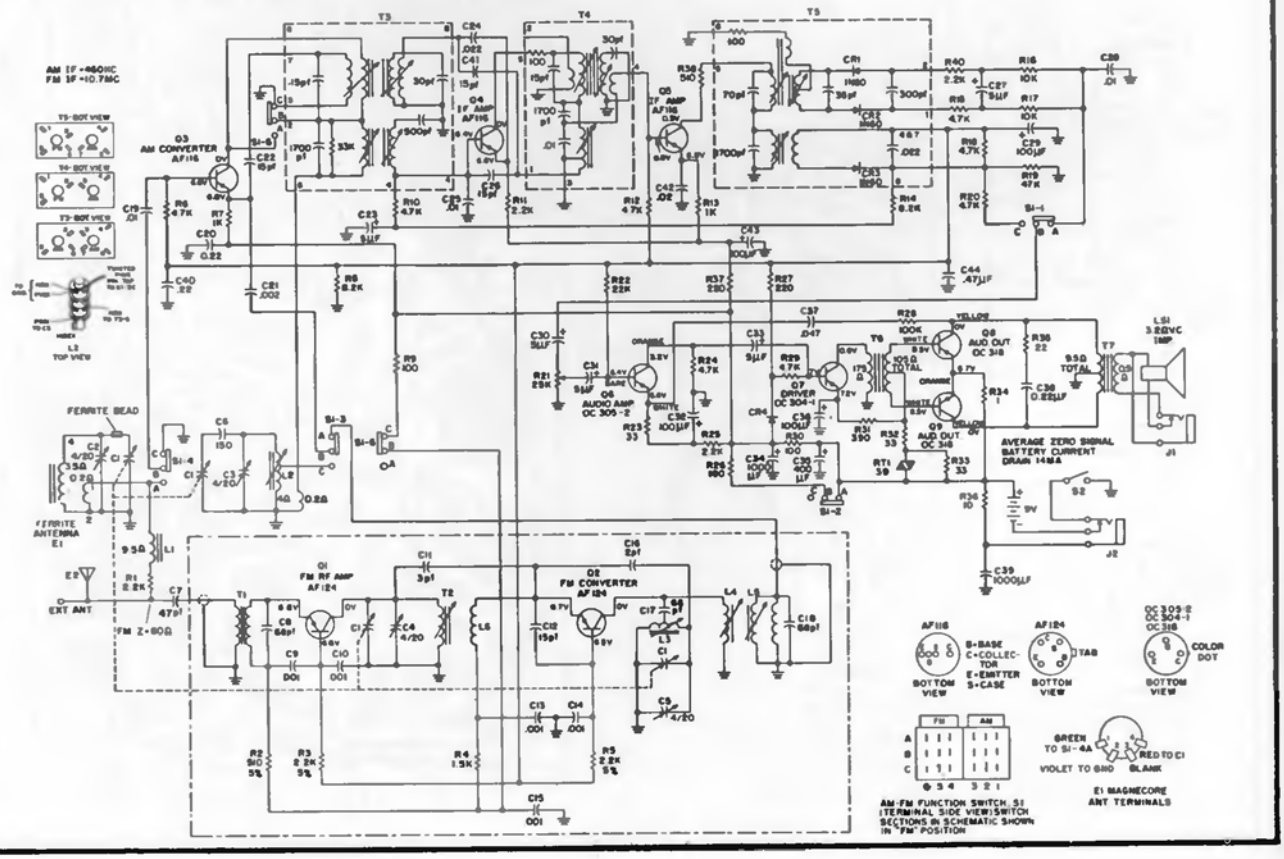

PHILCO Model T-907, Continued from preceding page, alignment on next page

BATTERY SUPPLY - 6 type "C" cells (number 635) in a 9 volt supply. Provision for connecting an external battery or AC power supply. Special receptacle automatically disconnects internal battery.

CIRCUIT - Nine transistor, 3 diode, AM-FM superheterodyne.
FREQUENCY COVERAGE - AM, 540KC to 1610KC
FM, 87.5MC to 108.5MC
INTERMEDIATE FREQUENCY - AM, 460KC
FM, 10.7MC

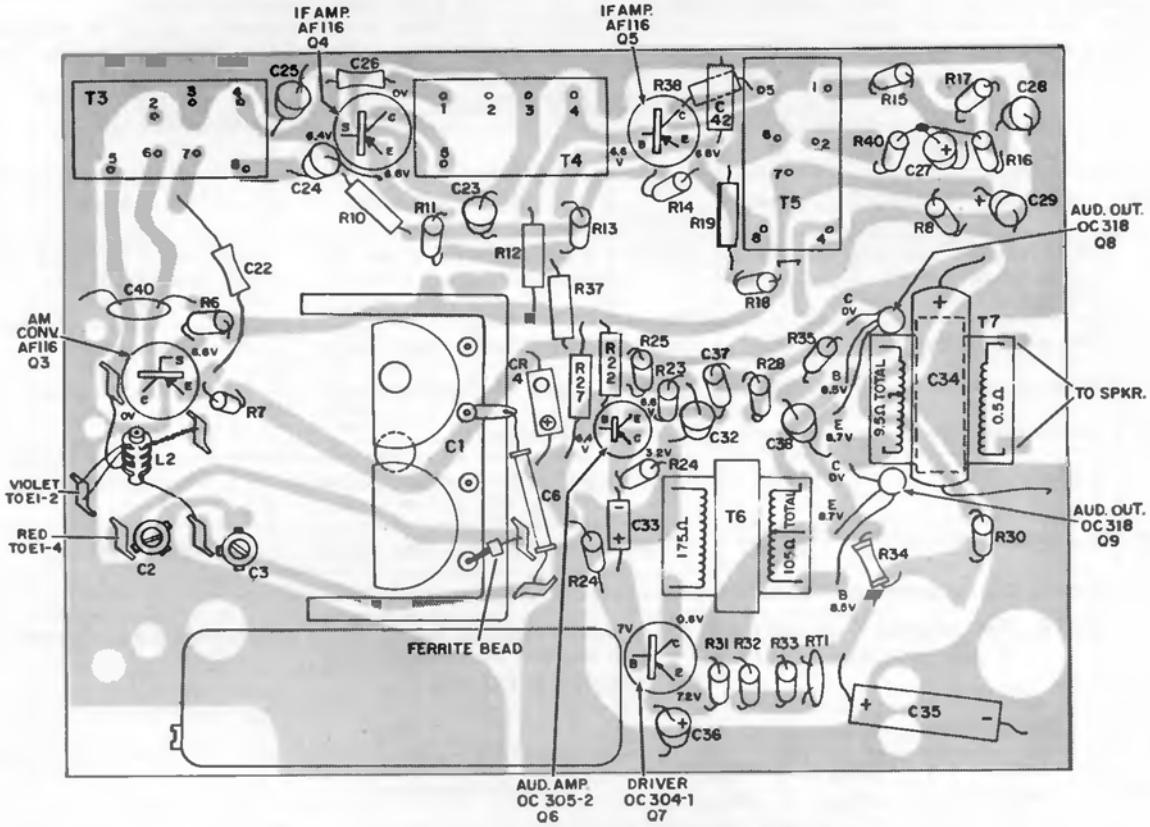

Bottom Composite View of Main Perma-Circuit Panel

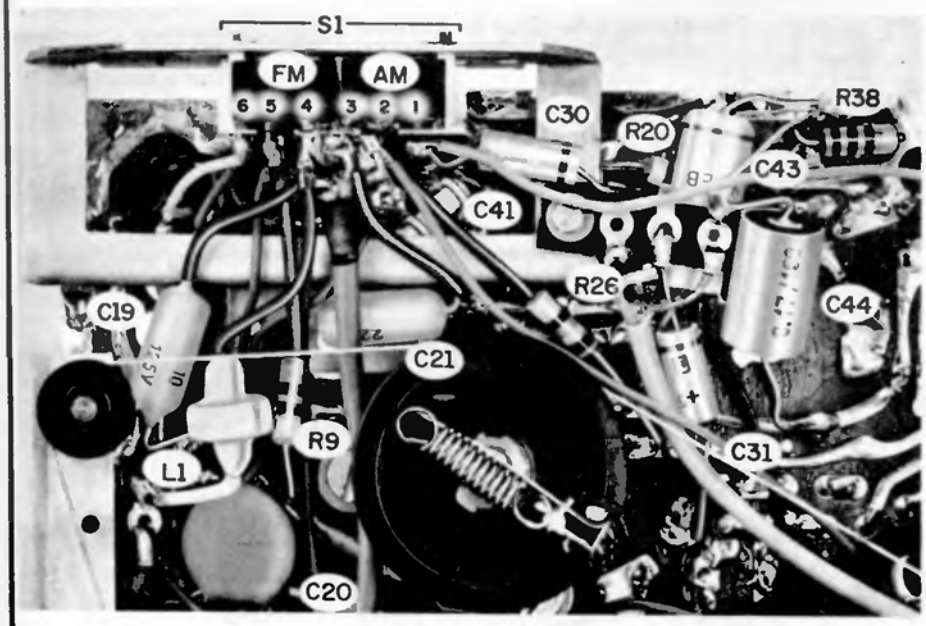

Under Panel Component Identification

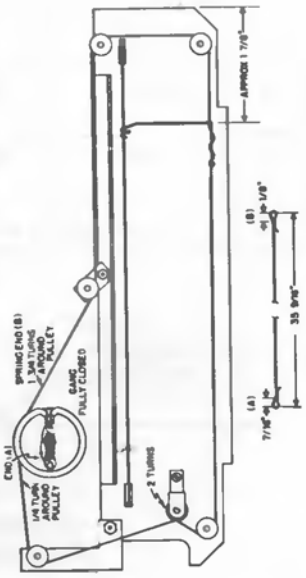

Dial Cord Stringing

PHILCO Model T-907, Alignment Information, Continued from preceding pages

AM ALIGNMENT PROCEDURE

Allow generator to warm up for 15 minutes.
Check pointer-scale alignment.
Chassis must be removed from cabinet. See disassembly instructions.
Connect scope or AC meter across speaker voice coil to observe output.
Volume control to maximum.
Check battery supply voltage, 9 volts.

FM ALIGNMENT PROCEDURE

Check pointer-scale alignment.
Chassis must be removed from cabinet. See disassembly instructions.
Depress FM push button.
Connect scope across volume control to observe "S" curve (see illustration below).
Loosely couple generator output to telescope antenna. Use only sufficient signal for clean scope presentation --- Do Not Overload.

AM ALIGNMENT CHART

Signal Generator			Radio		
Step	Connection To Radio	Frequency	Dial Setting	Special Instructions	Adjust
1	To base of AM converter, Q3, thru a .01 μfd capacitor.	460KC	1500KC	Adjust, in order given, for maximum output.	T3, 1st AM I-F top & bot. T4, 2nd AM I-F, top T5, 3rd AM I-F, top
2	Use radiating loop.	600KC	600KC	Adjust for maximum output.	L2, AM oac. core
3	Radiating loop	1500KC	1500KC	Adjust for maximum output.	C3, AM osc. trimmer
4.	Repeat Steps 2 and 3 until no further improvement is obtained.				
5	Radiating loop	600KC	600KC	Adjust for maximum output by sliding ant. coil on core.	E1, AM magnecore ant.
6	Radiating loop	1500KC	1500KC	Adjust for maximum output.	C2, AM ant. trimmer
7	Repeat Steps 5 and 6 until no further improvement is obtained.				

NOTE: For radiating loop, use a 6 to 8 turn, 6-inch diameter loop made up of insulated wire. Connect to generator terminals and place about one foot from antenna coil.

FM ALIGNMENT CHART

	Sweep Generator		Radio		
Step	Center Frequency	Sweep Width	Dial Setting	Special Instructions	Adjust
1	10.7MC	50KC		Adjust for cross-over at 10.7MC.	T5 - FM top.
				Adjust in order given for maximum output and best symmetry. Repeat	T5 - FM bottom T4 - FM Top & Bot. T3 - FM Top & Bot. L4 & L5
2	89MC	25KC	89MC	Adjust for maximum output.	L3 - FM osc. core T2 - FM R-F core
3	102MC	25KC	102MC	Adjust for maximum output.	C5 - FM osc. trim. C4 - FM R-F trim.
4	Repeat Steps 2 and 3 until no further improvement is noted.				

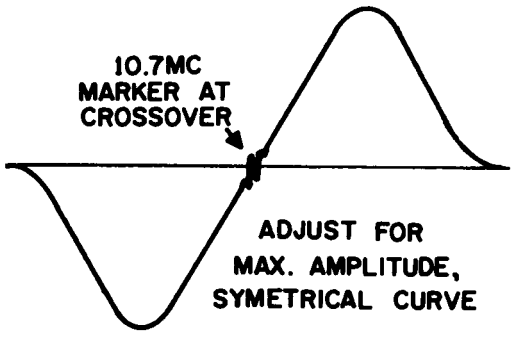

FM Alignment Curve

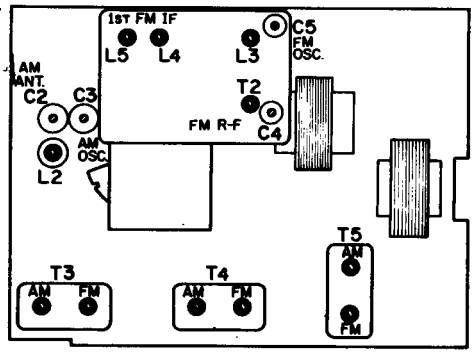

Chassis Alignment Points

PHILCO Model M-1428 and Model M-1430

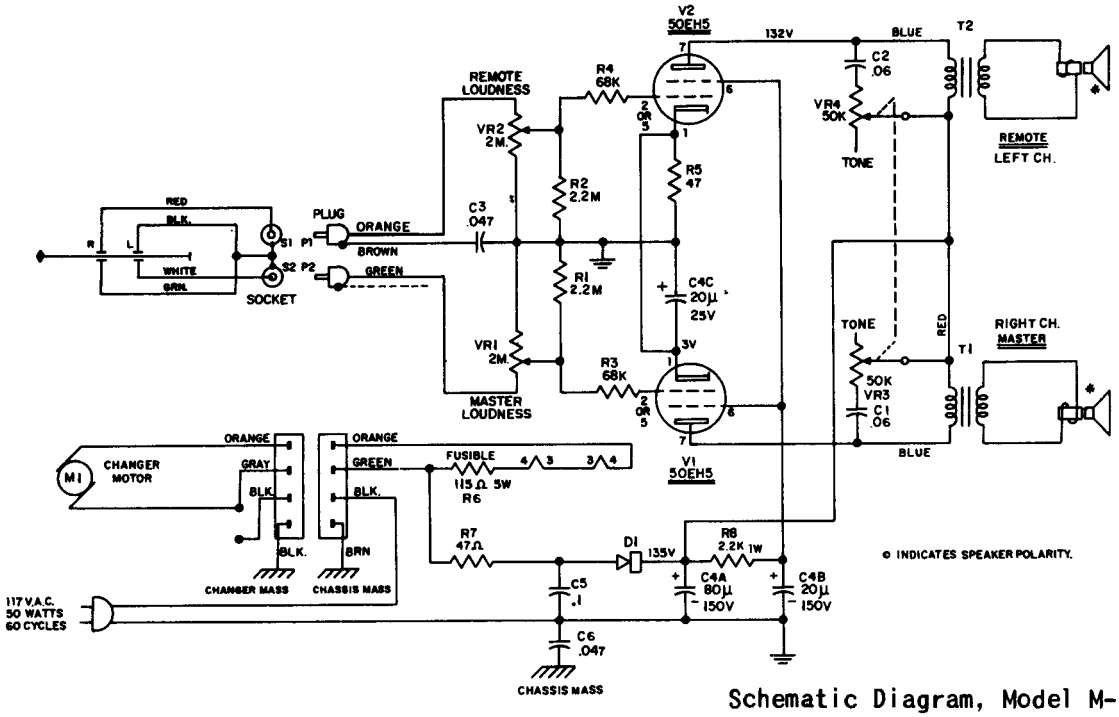

Schematic Diagram, Model M-1428

AMPLIFIER REMOVAL - MODEL M-1428

1. Remove four Phillips screws securing right speaker panel and remove panel.
2. Remove knobs and T-nuts from controls.
3. Remove nut on stud securing rear of chassis.
4. Remove four Phillips screws securing changer.
5. Lift changer and remove phono power and phono input cables.
6. Push cables through holes in back of changer compartment.
7. Pull enough left hand speaker cable into changer compartment in order to remove amp.
8. Amp. may now be removed by lifting rear of chassis up and out.

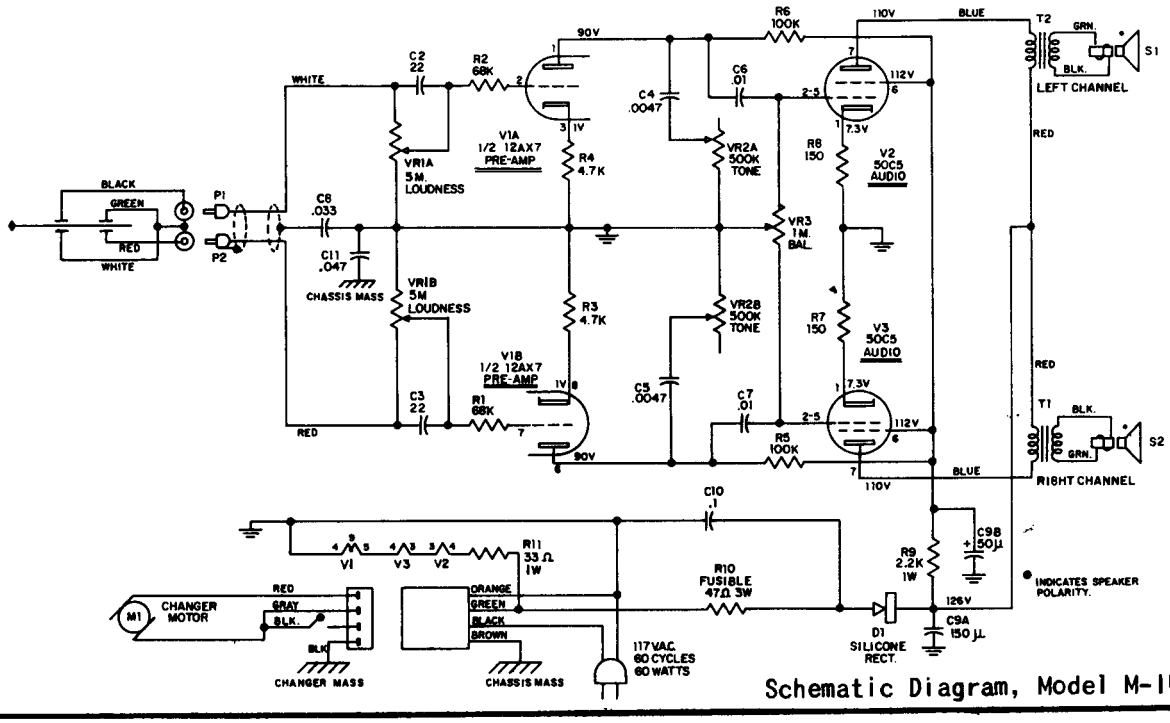

Schematic Diagram, Model M-1430

PHILCO

TRANSISTOR PORTABLE AM-FM MULTI-BAND T-911

(Service material continued on the next page, at right)

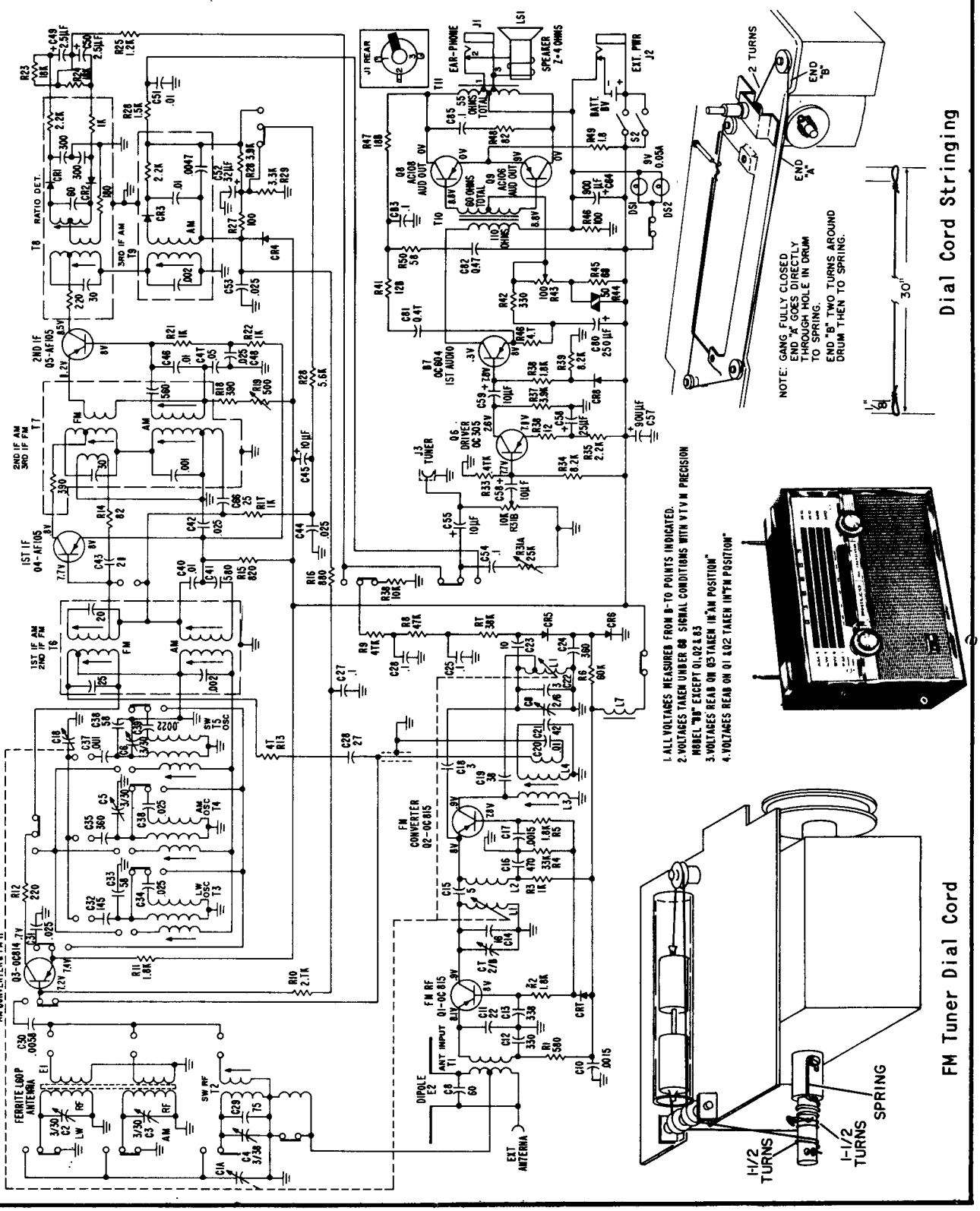

PHILCO Model T-911 Service Data, Continued from preceding page

Bottom View - IF Strip

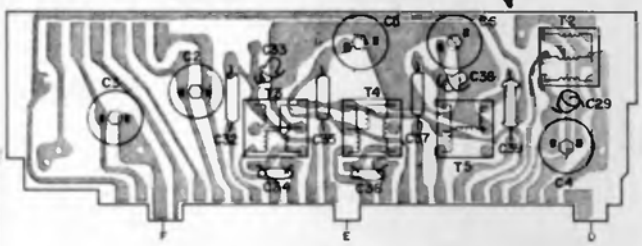

Top View - Coil Plate

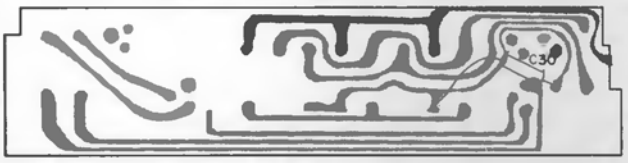

Top View - Pushbutton Assy. Bottom

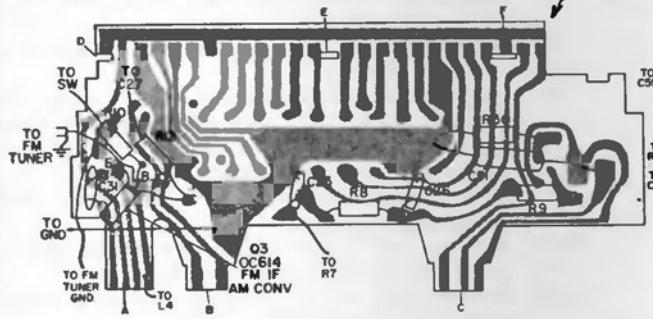

Top View - Pushbutton Assy. Top

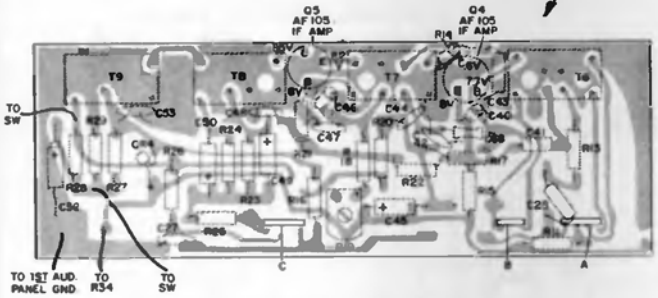

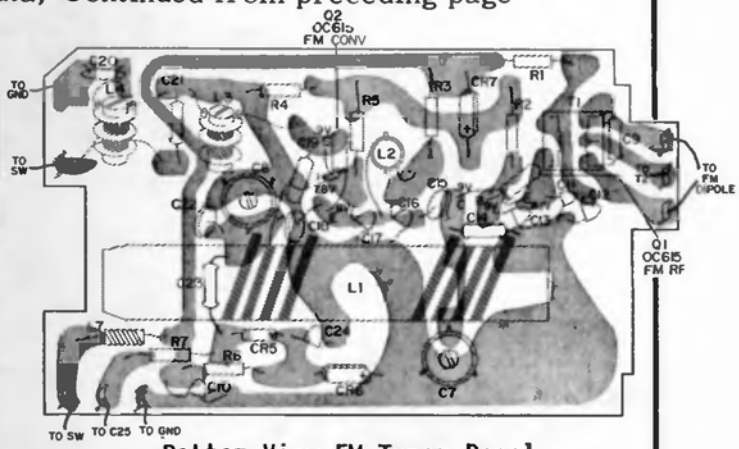

Bottom View FM Tuner Panel

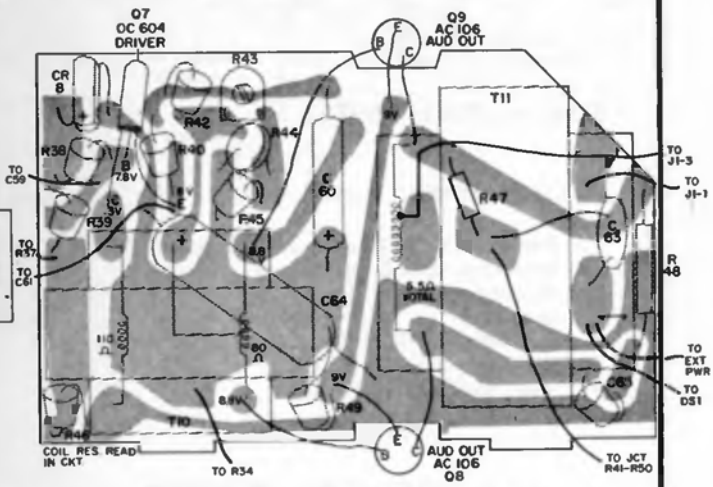

Bottom View Audio Output Stage

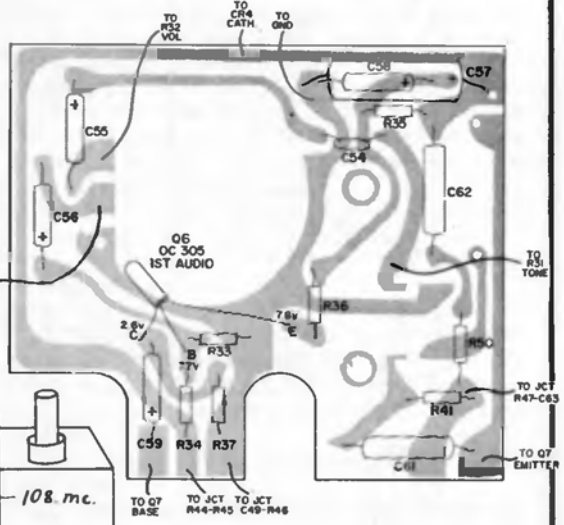

Bottom View
Audio Driver Stage

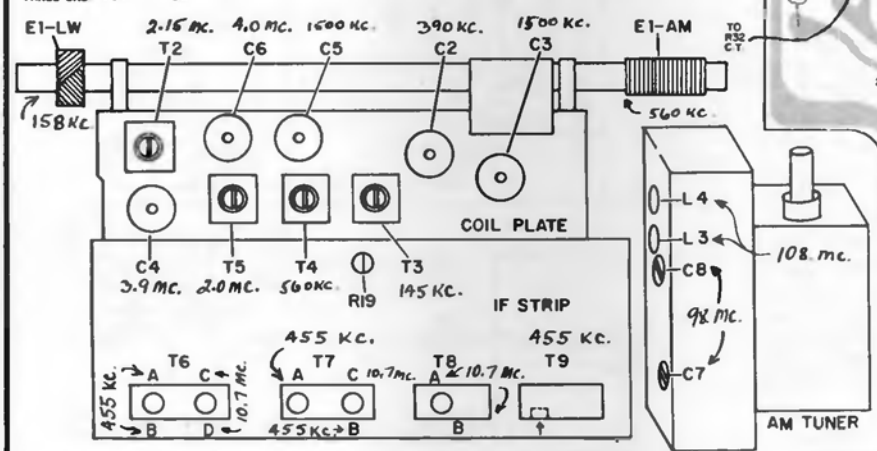

Alignment Points for AM, FM, LW & SW

PHILCO
Model M-1421
and
Model M-1529

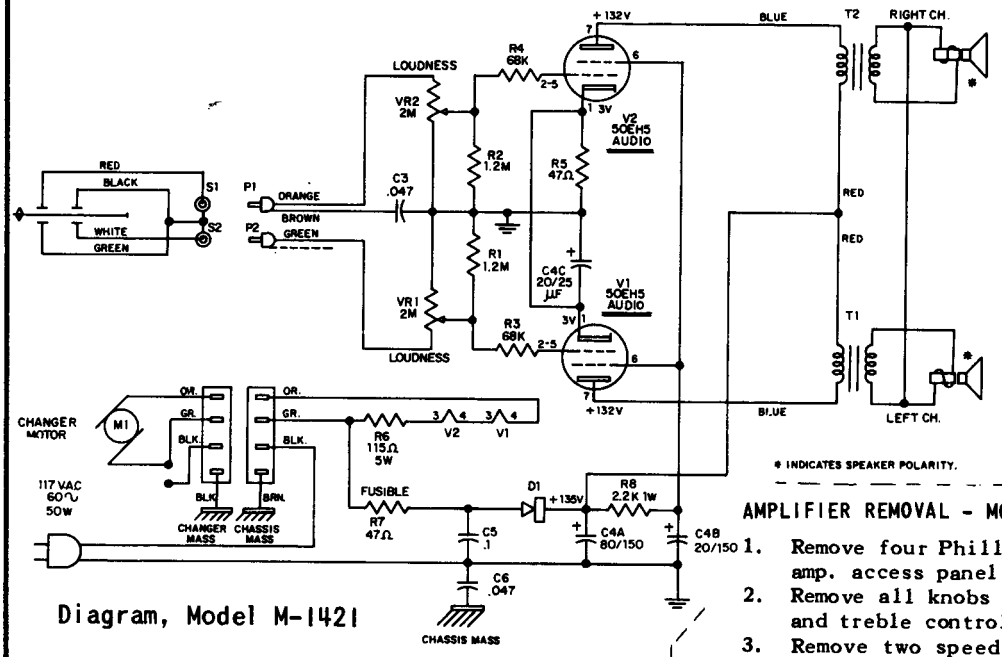

* INDICATES SPEAKER POLARITY.

Diagram, Model M-1421

AMPLIFIER REMOVAL - MODEL M-1421

1. Remove six Phillips screws securing changer mounting board to cabinet.
2. Remove changer mounting board and amp. assembly.
3. Remove two T-nuts securing amp. to changer mounting board.
4. Amp. may now be removed.

AMPLIFIER REMOVAL - MODEL M-1529

1. Remove four Phillips screws securing rear amp. access panel and remove panel.
2. Remove all knobs and two T-nuts from bass and treble controls.
3. Remove two speed nuts on studs securing rear of chassis.
4. Straighten clip securing left side of changer. Lift left side of changer to free mounting screws. Slide changer to left in order to free right mounting screw.
5. Lift changer and remove phono power and phono input cables.
6. Remove two cable clamps securing phono power and phono input cables.
7. Remove amp. while feeding cables through slot in side of changer drawer.

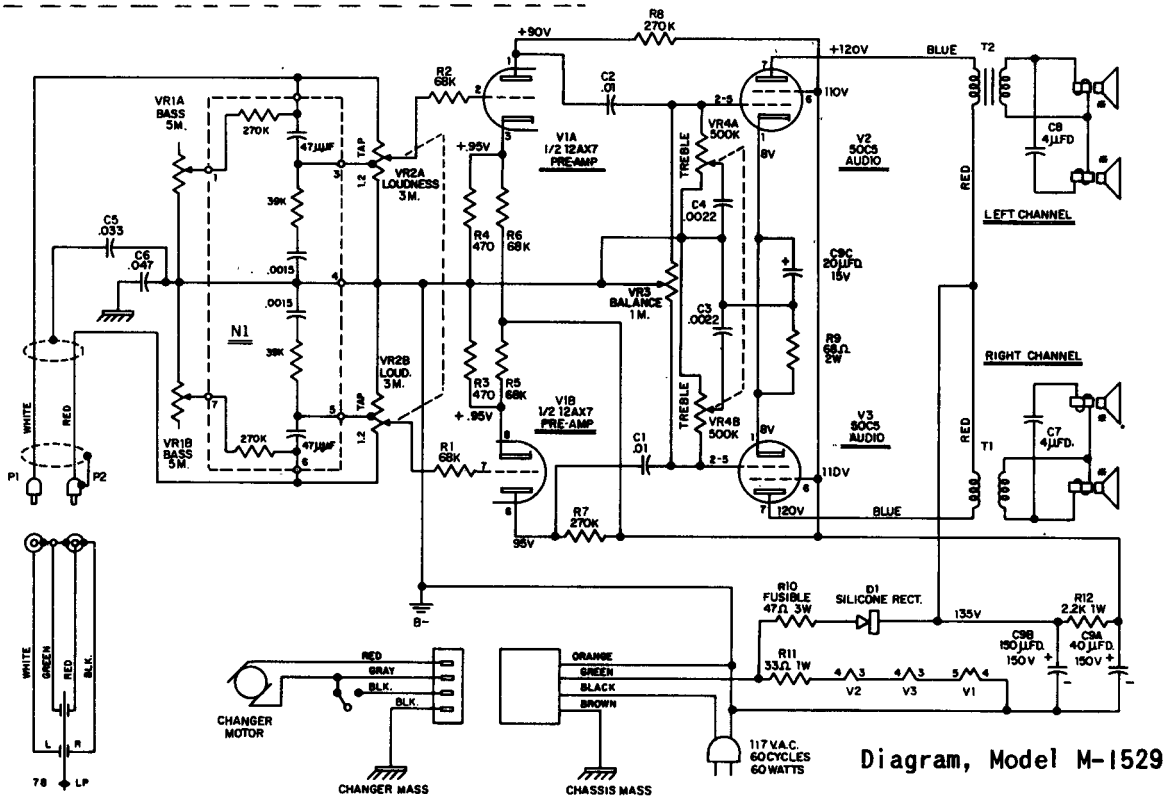

Diagram, Model M-1529

PHILCO Model M-1537 and Model M-1416 (Below)

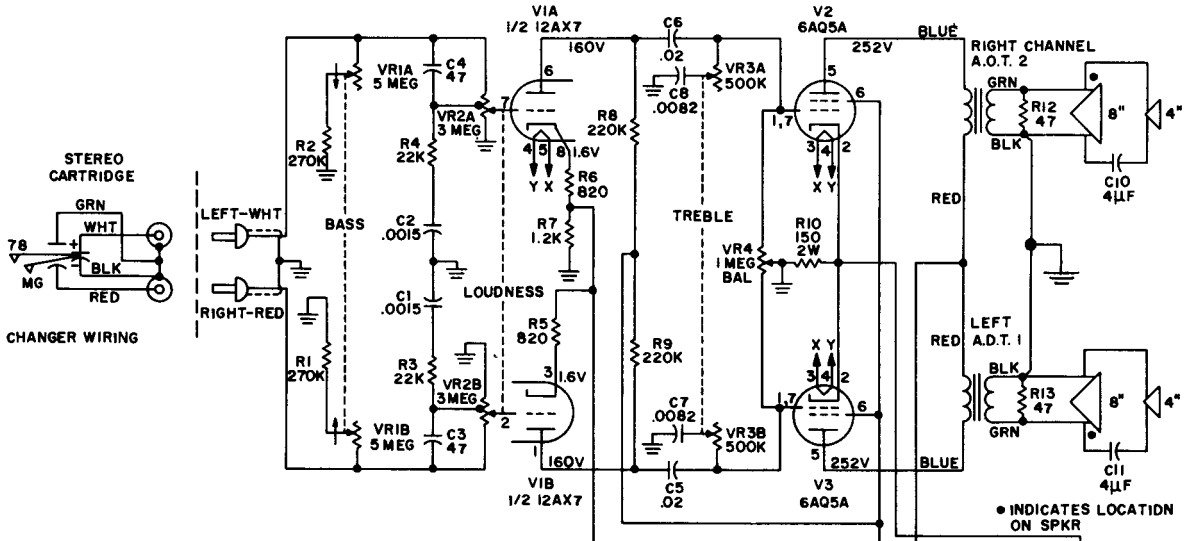

Schematic Diagram, Model M-1537

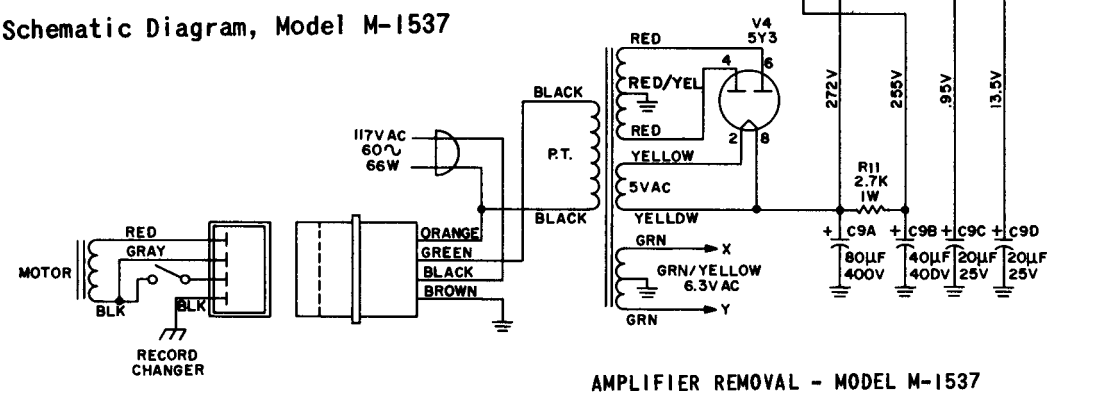

AMPLIFIER REMOVAL - MODEL M-1537

1. Remove two Phillips screws from back of cabinet. Do not remove two screws that fasten grille to cabinet back.
2. Remove plug on right side of changer base. Grasp washer on changer, hold down screw with long nose pliers. Grasp washer on side opposite washer opening through hole in right side of changer bin.
3. Lift right side of changer and slide changer to the right in order to free left side.
4. Unplug phono power and phono input cables. Set changer aside.
5. With a short screw driver, remove the two Phillips screws holding the amplifier compartment in the cabinet. These screws are located at the top of the changer compartment and run through the changer bin stop blocks.
6. Loosen phono power and phono input cable hold downs.
7. Slide amplifier compartment out of cabinet guiding all cables through openings in side and back of cabinet.
8. Remove knobs and T-nuts located on controls behind knobs.
9. Remove two speed nuts from studs on amplifier rear flange. Lift amplifier to clear studs and pull away from compartment.

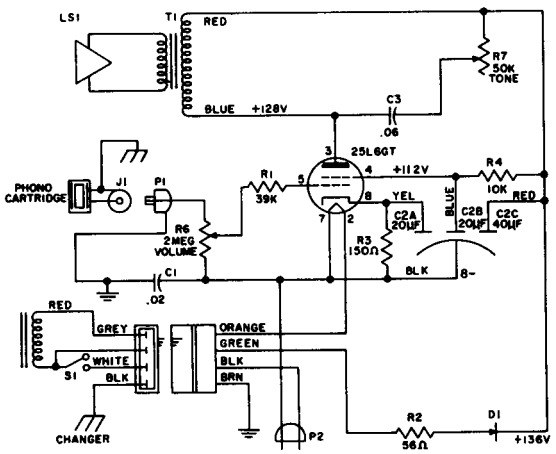

Schematic Diagram, Model M-1416

PHILCO MODELS L-1651, L-1652, & L-1653

(Service material continued on pages 125 through 128)

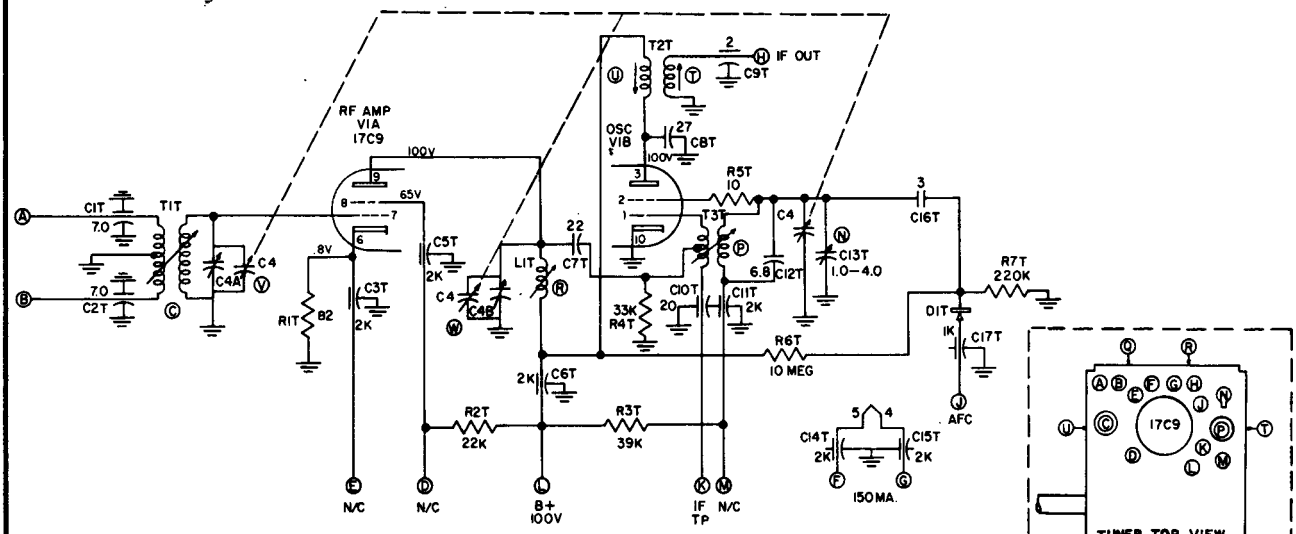

FM TUNER SUB-ASSEMBLY, MODELS L-1651, L-1652, & L-1653

FM TUNER SUB-ASSY. REMOVAL - MODELS L-1651, L-1652 & L-1653

1. Remove 8 screws holding front faceplate to chassis.
2. Remove faceplate and large pulley connected to AM tuning gang. DO NOT REMOVE dial cord.
3. Remove connecting cord from FM and AM tuning gang pulleys only.
4. Unsolder 6 wires that connect tuner to chassis.
5. Remove 4 sheet metal screws holding front and back of tuner in chassis.
6. Remove tuner by forcing from chassis.

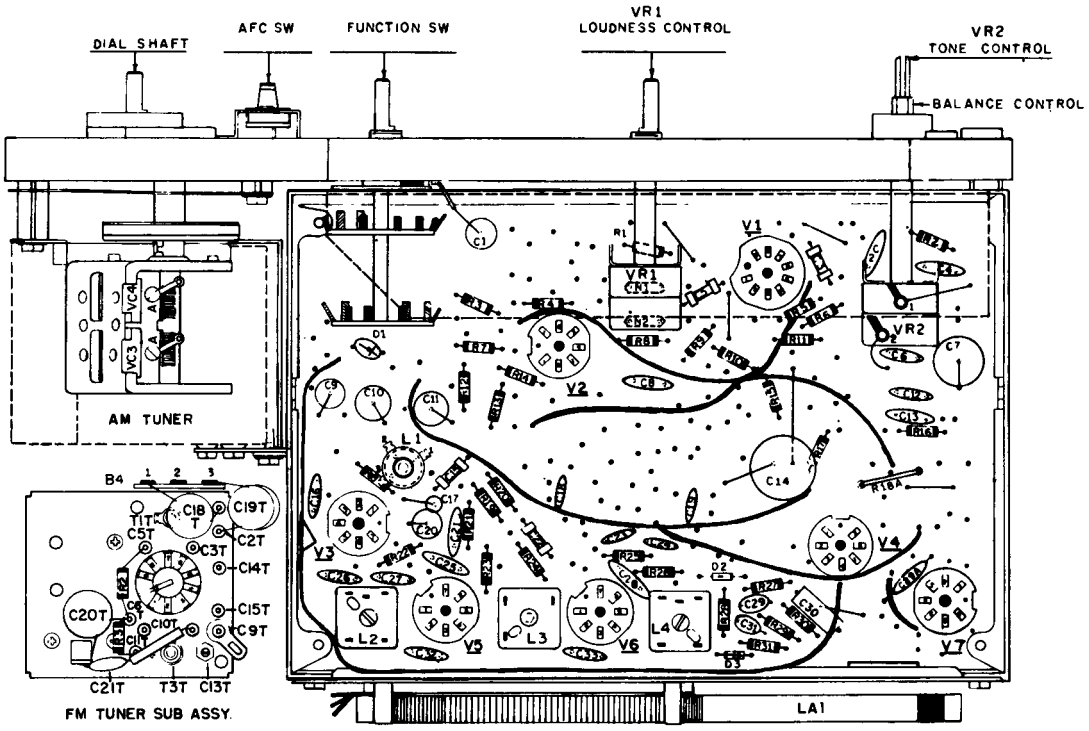

Top View Component Location Model L-1651

PHILCO

MODEL L-1651 AMPLIFIER AND TUNER

(Continued from page 124, Diagram is on page 125)

AMPLIFIER AND TUNER PANEL REMOVAL - L-1651, L-1652 & L-1653

1. Unsolder all wires holding perma-circuit panel in chassis.
2. Remove 6 sheet metal screws that secure perma-circuit panel to front panel and FM tuner.
3. Remove 2 nuts from function switch and loudness control.
4. Pull panel and associated chassis from front panel.
5. Remove 5 sheet metal screws holding perma-circuit panel to chassis.
6. Lift panel away from chassis.

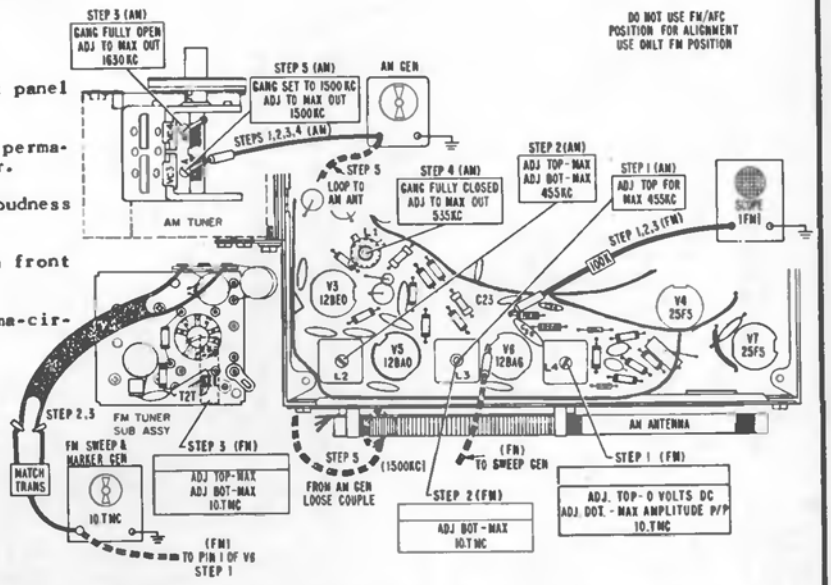

Alignment Procedure Chart, Model L-1651

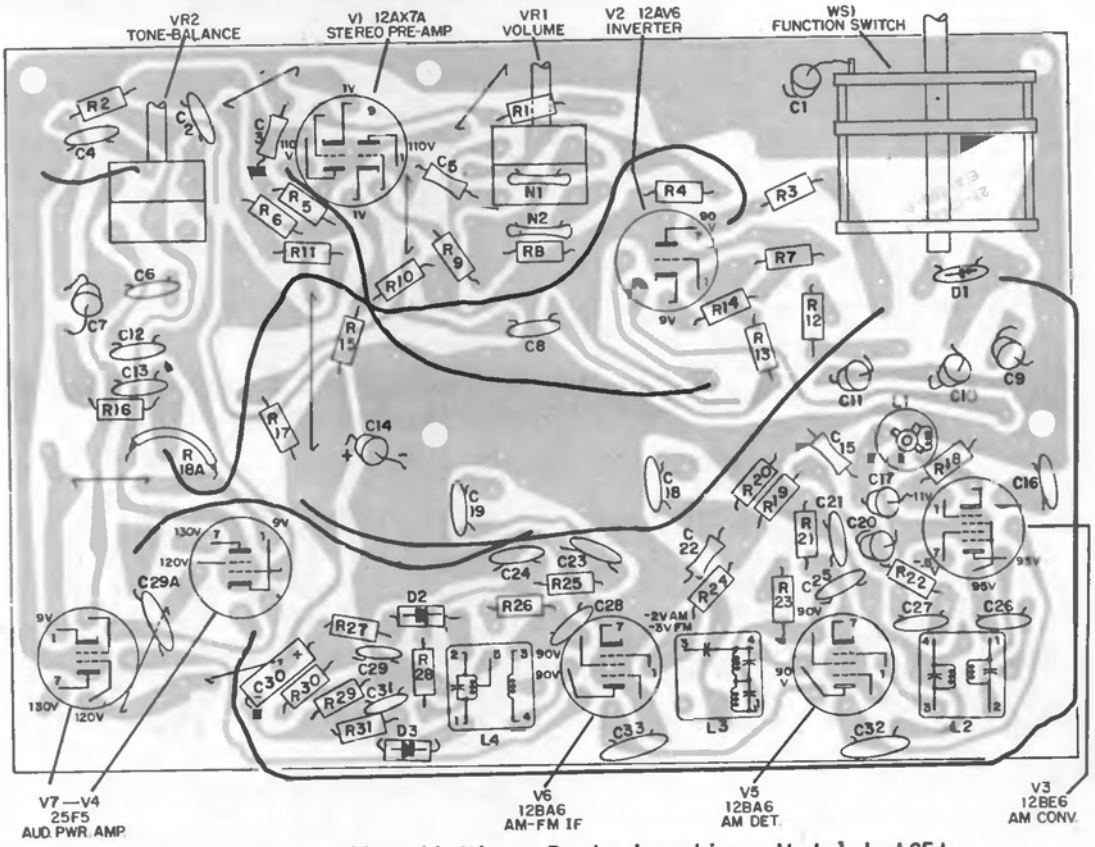

Bottom Perma-Circuit View, Parts Location, Model L-1651

PHILCO Model L-1651

(Continued from pages 124-125)

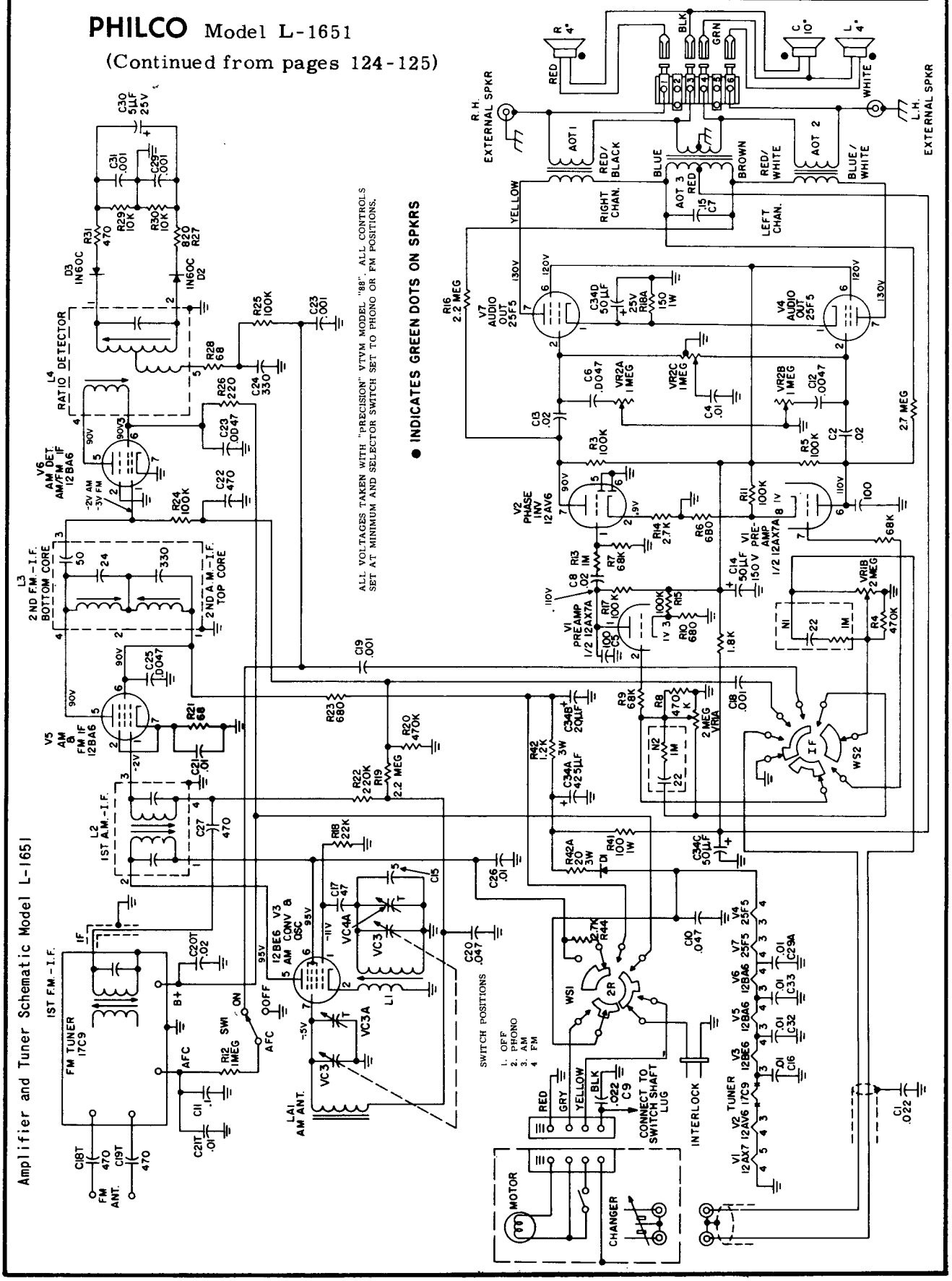

PHILCO

MODELS L-1652 & L-1653 AMPLIFIER AND TUNER

(Continued)

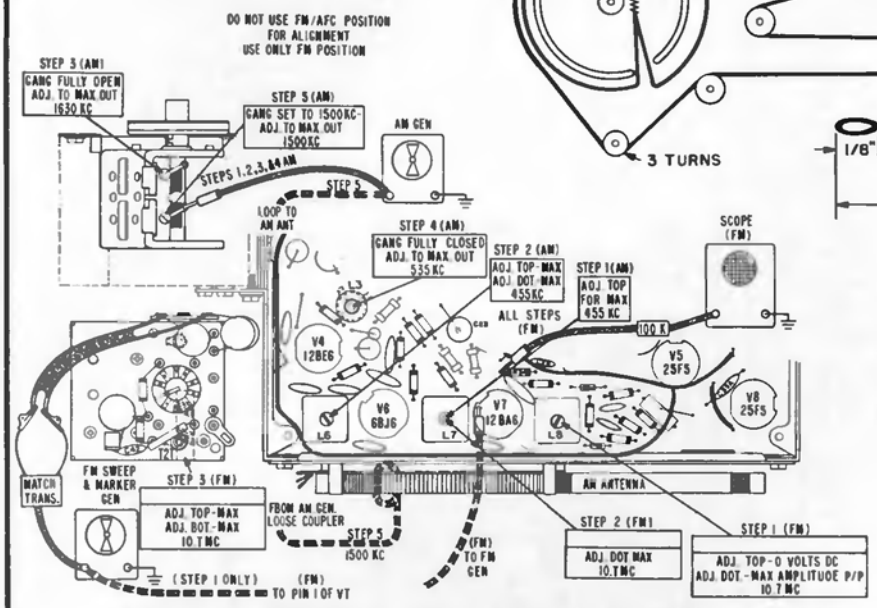

Alignment Procedure Chart, Models L-1652 & L-1653

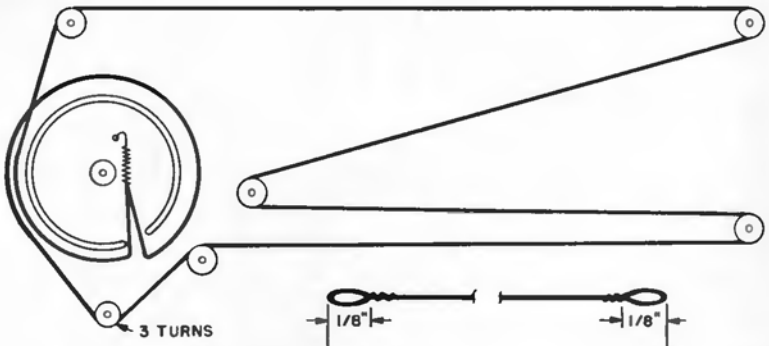

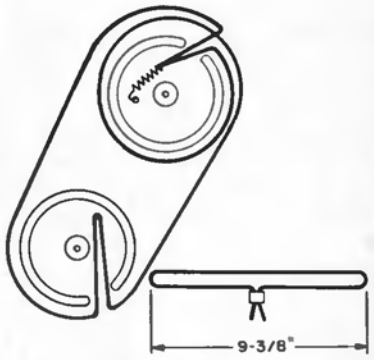

Dial Cord Stringing

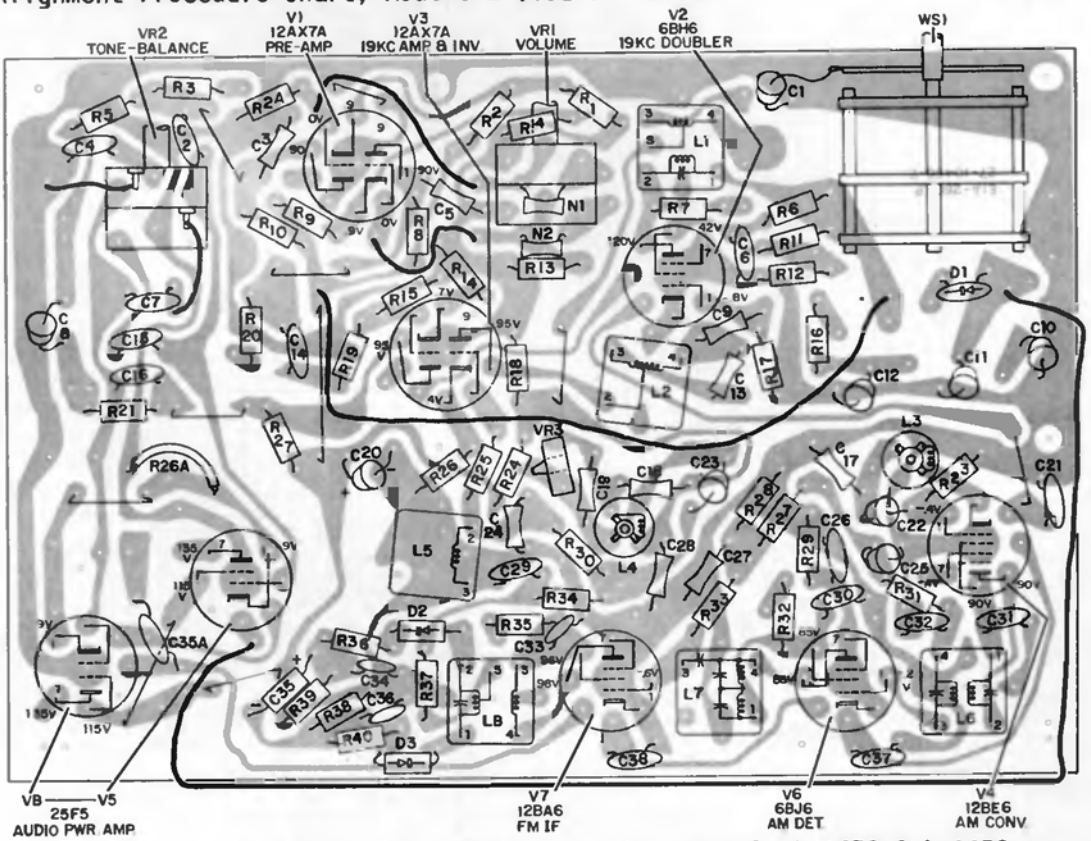

Bottom Perma-Circuit View Parts Location, Models L-1652 & L-1653

PHILCO MODELS L-1652 & L-1653

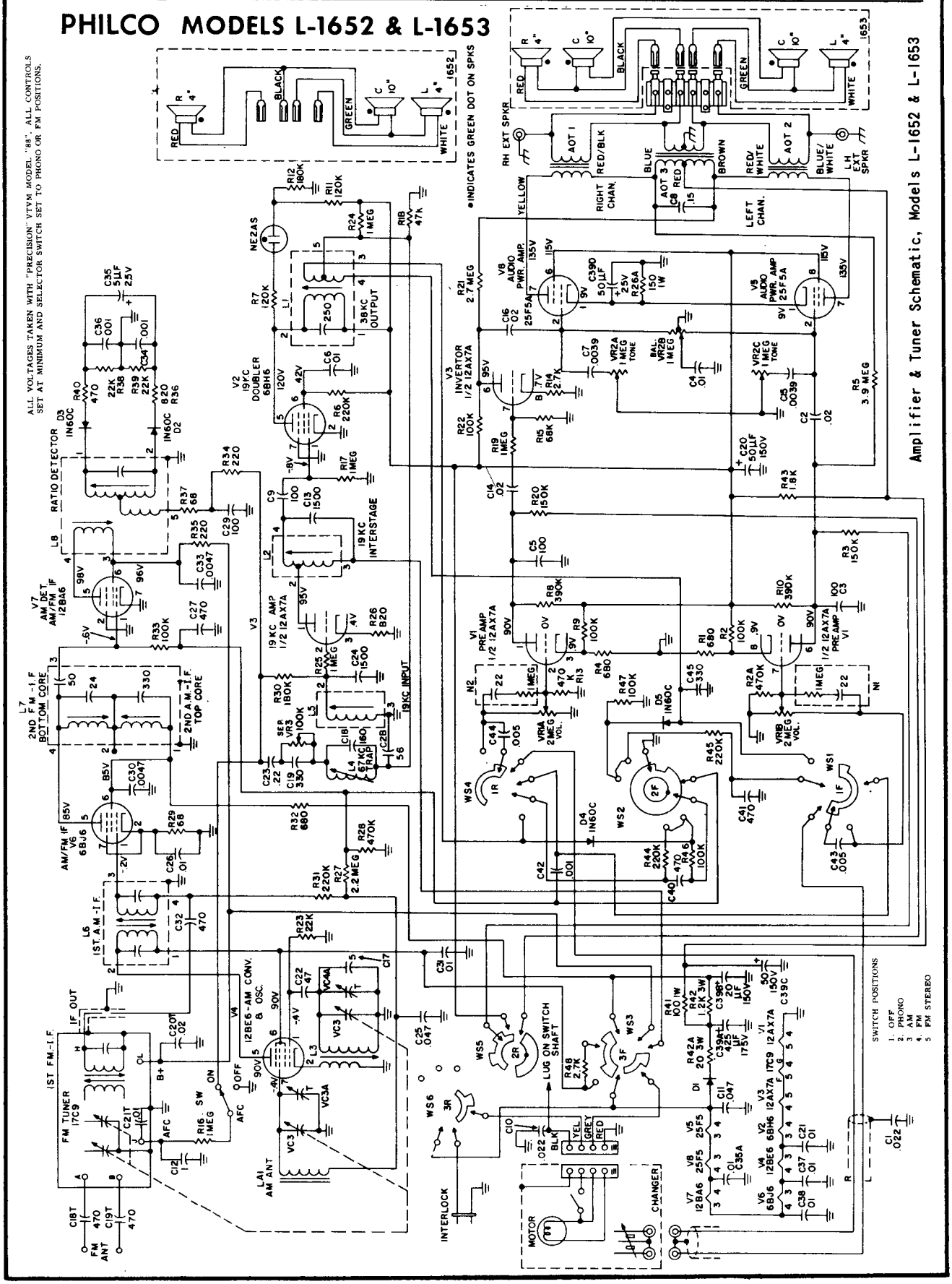

PHILCO Models L-1656, L-1667 & L-1679

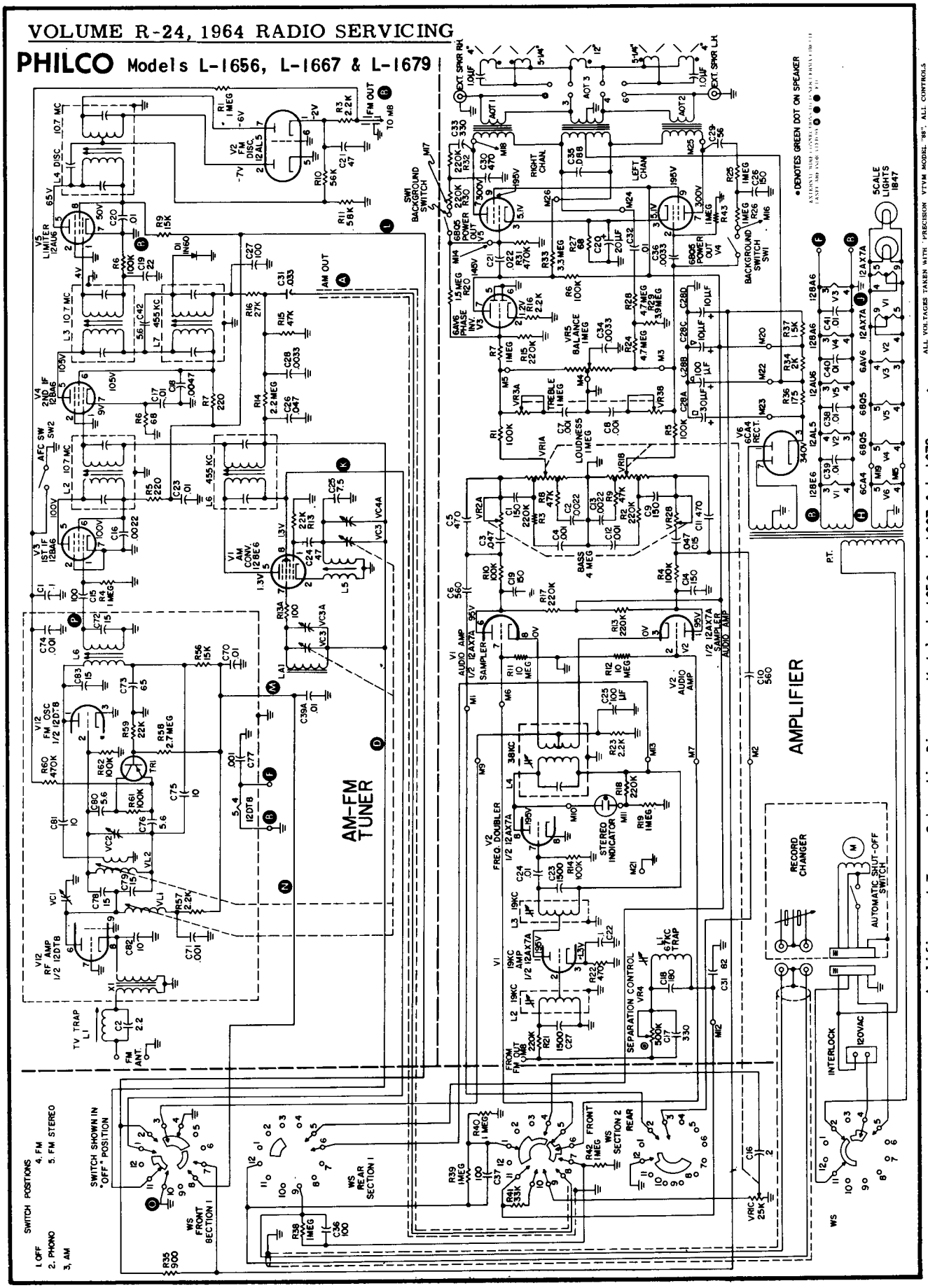

Amplifier and Tuner Schematic Diagram, Models L-1656, L-1667 & L-1679

PHILCO Models L-1656, L-1667, L-1679, (L-1731) Amplifier & Tuner (Continued)

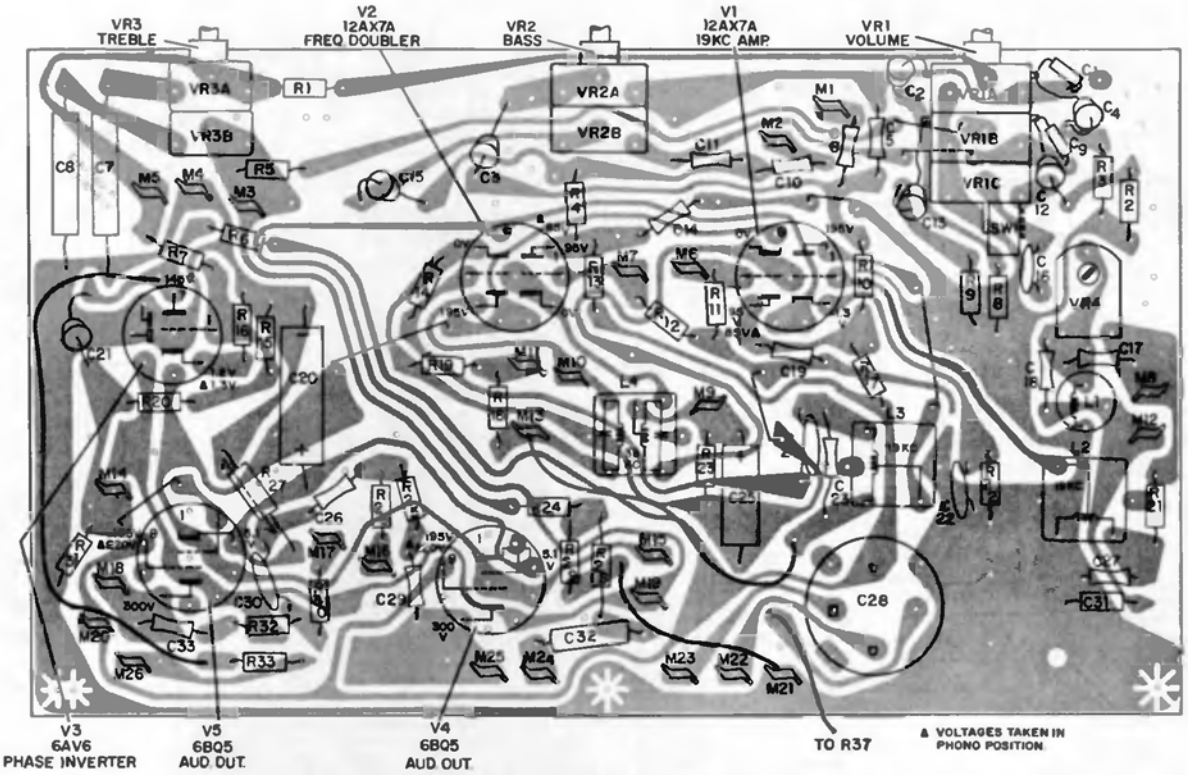

Bottom Perma-Circuit View, Parts Location, Models L-1656, L-1667 & L-1679

Amplifier perma-circuit panel was changed to Run 2 identified by a red dot. Panel changes consisted of removing wire jumper from Pin 1 of V1 to center tap of L3. Wire jumper was replaced with a 1KΩ resistor R16A. Resistor R18 was changed to 270KΩ. R14 was changed to 220KΩ. The copper foil connecting M10 and Pin 6 of V2 was opened. A 780KΩ resistor was soldered to the bottom of the panel from M10 to Pin 6 of V2. R19 was changed to a 1 megohm resistor.

Amplifier perma-circuit panel was changed to Run 3 identified by an orange dot. Panel changes consisted of removing wire jumper connecting Pin 2 of V5 to junction of M14, C21 and R31 and replacing with a 1KΩ resistor.

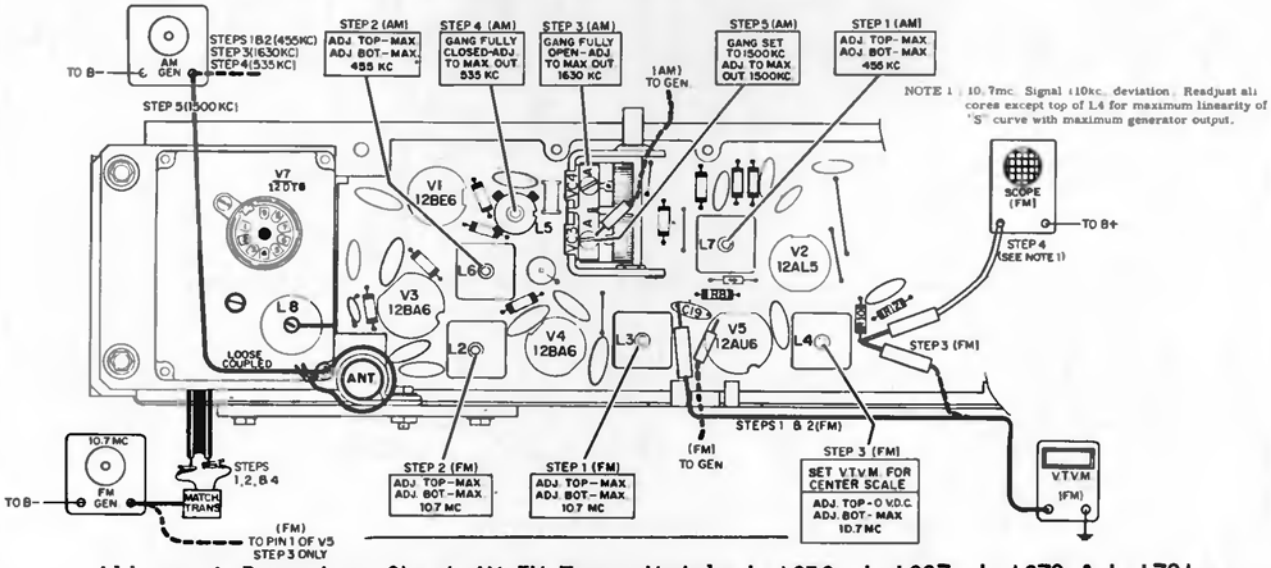

Alignment Procedure Chart AM-FM Tuner Models L-1656, L-1667, L-1679 & L-1731

RCA VICTOR

Chassis RS-202A, Models 3VC64, 3VC82, 4VC64, 4VC69, 4VC82, and similar Chassis RS-202B, used in Models 4VE045, 4VE046.

ACCESS TO TUBES

All tubes are accessible through the small panel on the rear of the instrument.

1. Remove power cord.
2. Remove three (3) plated screws holding small access panel on rear of instrument.
3. Swing panel down and to right on its pivot. DO NOT ATTEMPT TO REMOVE PANEL.

CHASSIS REMOVAL

The top of the record changer compartment comprises the complete chassis. It rests on and is secured to a ledge at the front and is held by screws at the rear. The recommended procedure for its removal is as follows:

1. Remove knobs.
2. Open small access panel as described in "Access to Tubes."
3. Position two (2) holes in access panel over screws holding power cord interlock.
4. Remove two (2) *machine screws* holding interlock.
5. Pull record changer drawer down.

If it is not desired to remove chassis completely, omit Steps 6 & 7.

6. Unscrew two (2) bolts securing record changer in access holes in turntable, one at front and one at rear.) drawer. (Lift mat of turntable and reach bolts through access holes in turntable, one at front and one at rear.) DO NOT ATTEMPT TO REMOVE RECORD CHANGER DRAWER.
7. Lift up changer and disconnect cables.
8. Remove four (4) *plated screws* holding front of chassis to horizontal ledge located inside of compartment at front of top.
9. Remove wires, running down each back corner of compartment, from holding clips.
10. Remove four (4) *painted screws* holding rear of chassis to rear of instrument—just below the access panel.
11. Chassis may then be lowered and removed.
12. Disconnect speaker cables from transformers and lift chassis out of case.

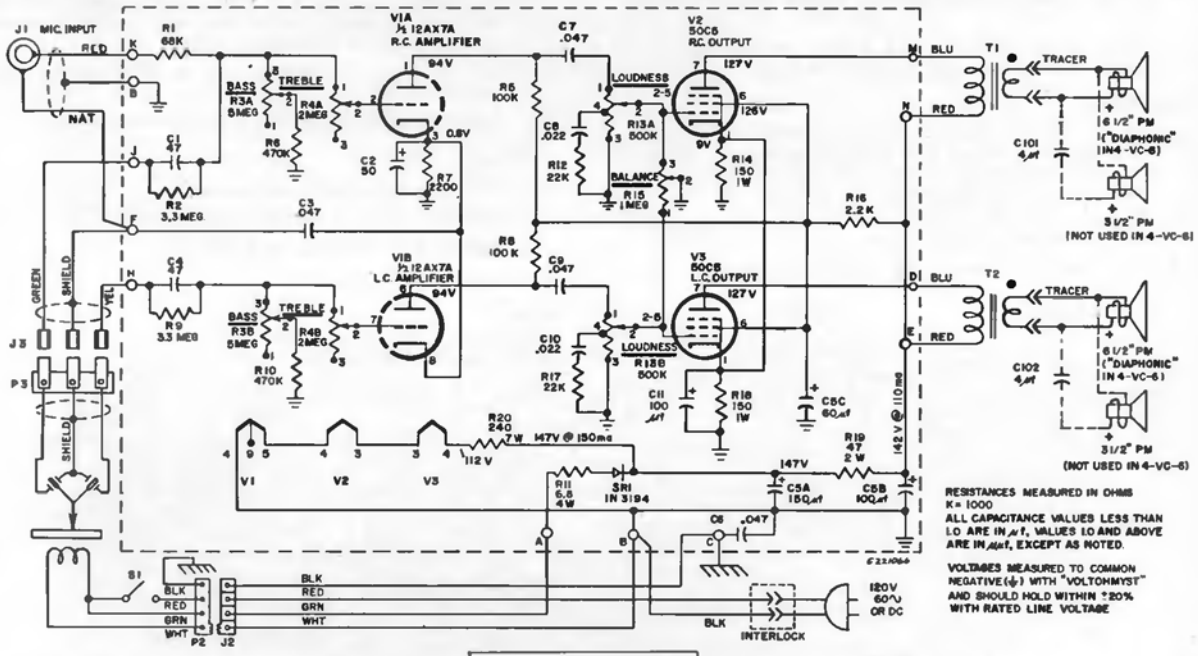

Wiring Board—View from Wiring Side

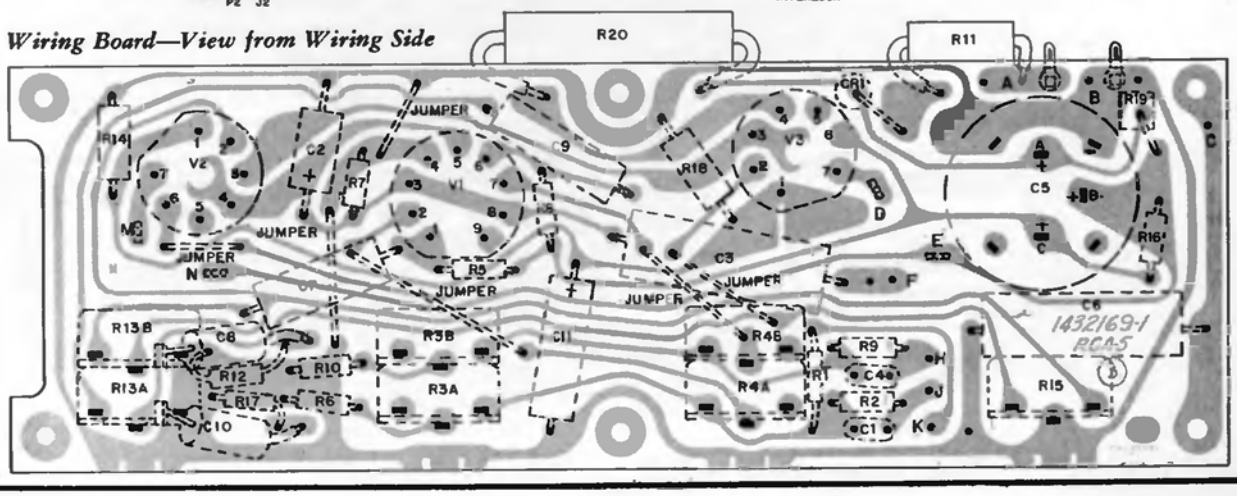

RCA VICTOR

4RA1 Series, Models 4RA10, 4RA14, 4RA15, Chassis RC-1213A,
4RA3 Series, Models 4RA30, 4RA31, 4RA34, Chassis RC-1213B,
4RA4 Series, Models 4RA41, 4RA42, 4RA45, Chassis RC-1213F,
4RD4 Series, Models 4RD40, 4RD44, 4RD41, Chassis RC-1213H,
4RD5 Series, Models 4RD51, 4RD52, 4RD55, Chassis RC-1213E.

(Service data below and continued on the next page at right)

CHASSIS ACCESSIBILITY

4RA1 and 4RD4 Series

1. DO NOT ATTEMPT TO REMOVE THE KNOBS. The tuning and volume control knobs are held captive to the cabinet by retainers on their shafts.
2. Remove the back cover by lifting the protrusions on the bottom of the back cover, out of the slots in the base of the cabinet.
3. Unsolder speaker leads if necessary. Avoid putting a strain on the speaker leads.
4. Remove two chassis retainers (screws or clips), one at the volume control and one on the left end mounting.
5. Grasp tuning capacitor and volume control, and pull chassis out of knobs and mounting slots.

4RA3 Series

1. IT IS NOT NECESSARY TO REMOVE THE KNOBS. The chassis, antenna, and loudspeaker are all mounted on the front panel section and are readily accessible when the back is removed.
2. Remove two (2) screws, one at each of the upper corners of the back.
3. Pull front panel section out of hood-back section.

To reassemble—

1. Align the power interlock connector.
2. Press the front and back sections of the cabinet together.
3. Check that the three bosses on the bottom of the front section are seated in their respective slots in the bottom of the back section.
4. Replace screws at upper back corners.

4RA4 and 4RD5 Series

1. IT IS NOT NECESSARY TO REMOVE THE KNOBS. The chassis, antenna, and loudspeaker are all mounted on the front panel section and are readily accessible when the back is removed.
2. Remove four (4) screws, one at each of the back corners.
3. Pull front panel section out of hood-back section.

To reassemble—

1. Align the power interlock connector.
2. Press the front and back sections together.
3. Replace four screws in back corners.

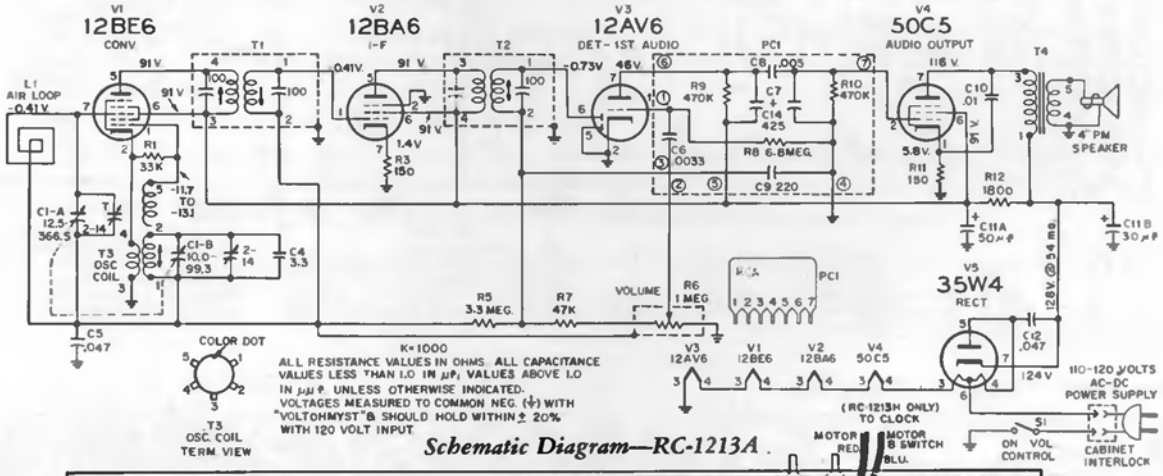

Schematic Diagram—RC-1213A

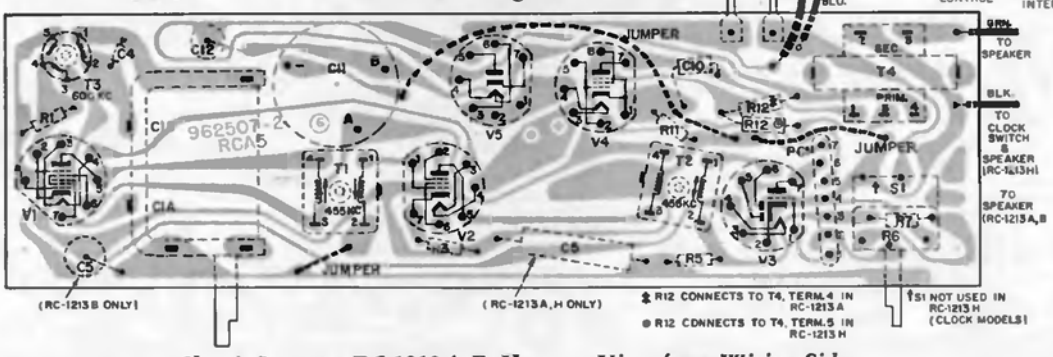

Chassis Layout—RC-1213A, B, H *View from Wiring Side*

RCA Victor Chassis RC-1213A, -B, -E, -F, -H, Continued from preceding page.

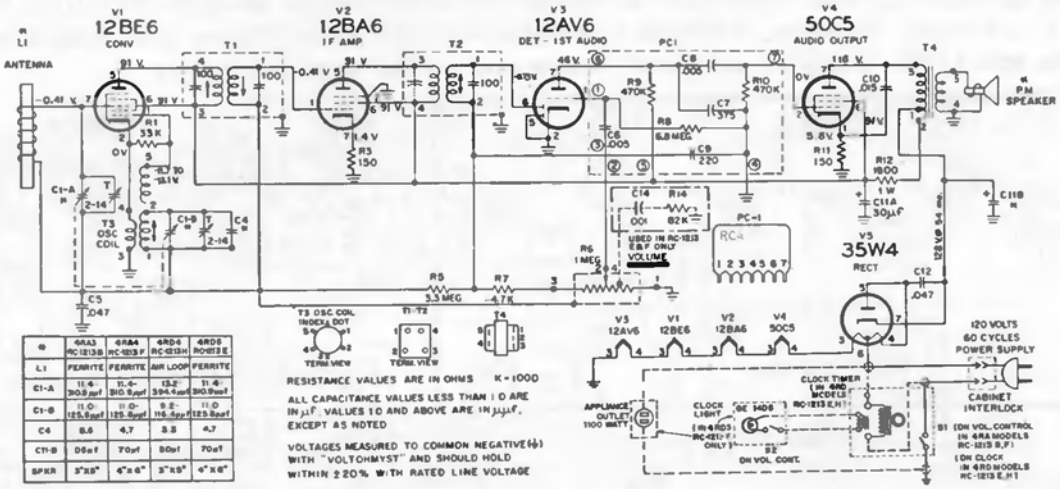

#	6RA3 RC-1213B	6RA4 RC-1213F	4RD4 RC-1213H	4RD5 RC-1213E
L1	FERRITE	FERRITE	AIR LOOP	FERRITE
C1-A	11.4-310.8µµf	11.4-310.8µµf	13.2-394.4µµf	11.4-310.8µµf
C1-B	11.0-125.5µµf	11.0-125.5µµf	9.8-116.5µµf	11.0-125.5µµf
C4	8.8	4.7	3.3	4.7
C11-B	50µf	70µf	50µf	70µf
SPKR	3"x5"	6"x6"	3"x5"	6"x6"

Schematic Diagram—RC-1213B, E, F, H

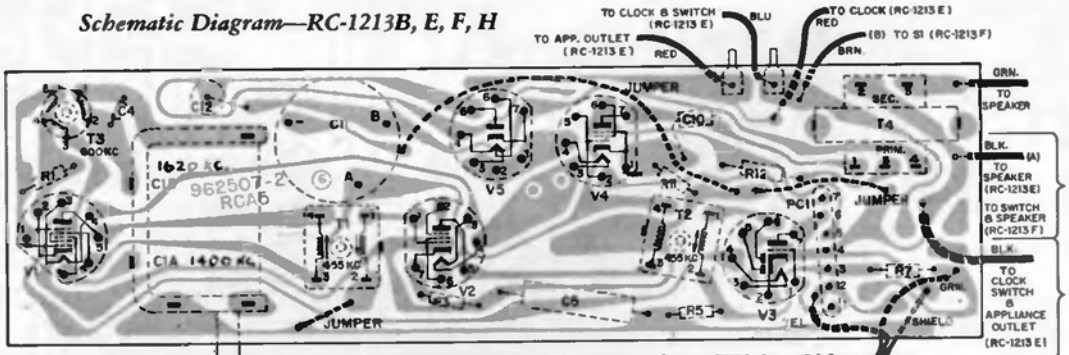

Chassis Layout—RC-1213E, F View from Wiring Side

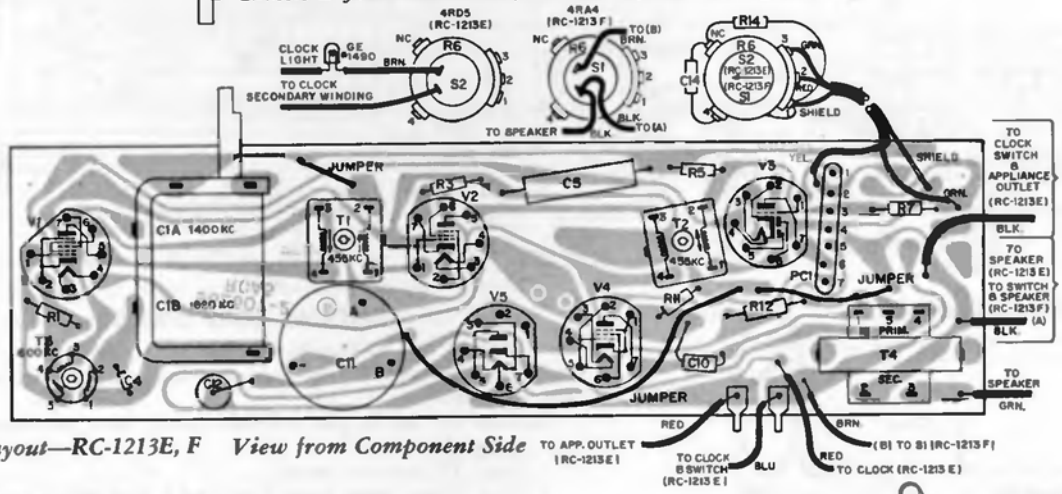

Chassis Layout—RC-1213E, F View from Component Side

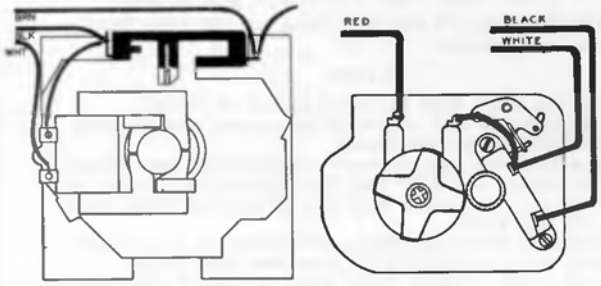

Clock Wiring

Dial Cord Stringing

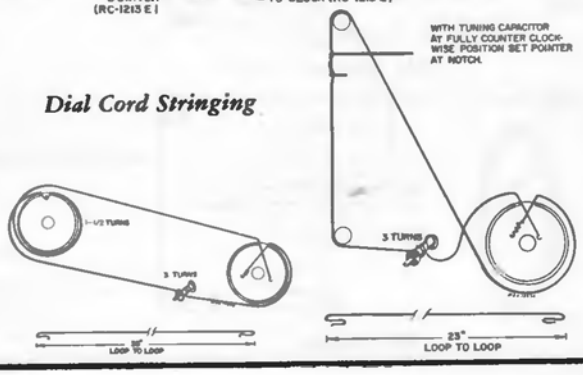

RCA VICTOR Models 3VF305, 3VF306, 3VF340, 3VF346, 3VF349, employ Tuner Chassis RC-1205C and Amplifier Chassis RS-199B; while Models 3VF405, 3VF446, 3VF516, 3VF534, 3VF604, 3VF619, 3VF646, use the same Tuner and Amplifier Chassis RS-177H. Service material below and on the next two pages.

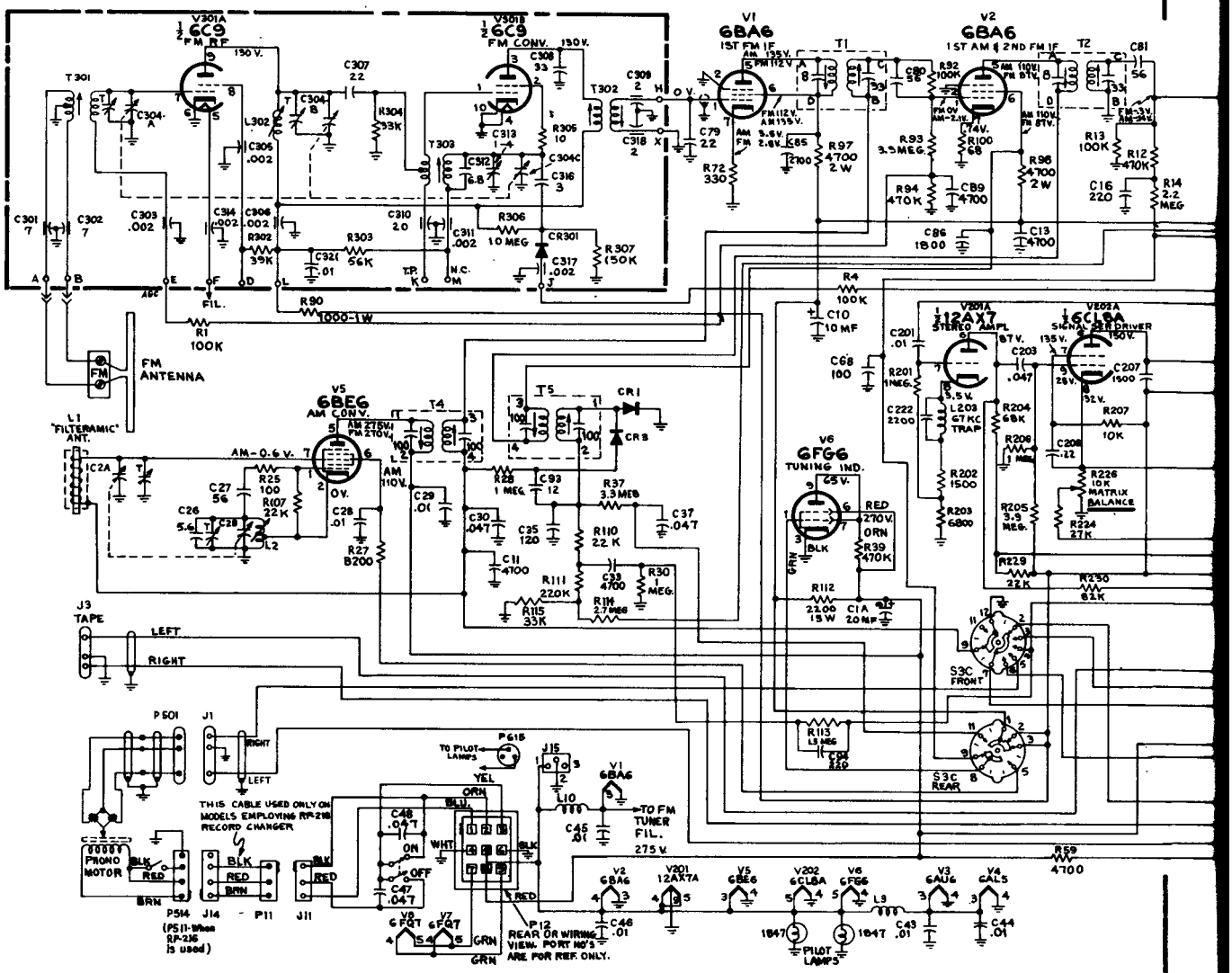

Dial Cord Stringing

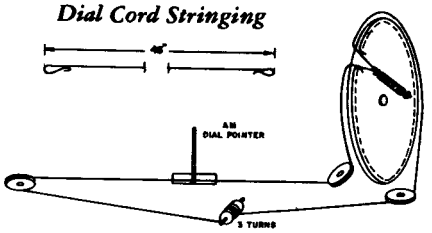

AM Section

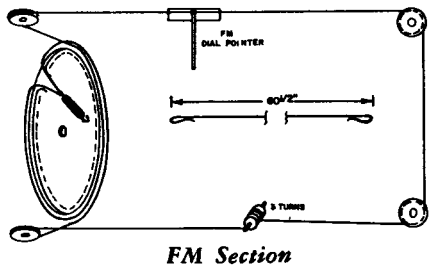

FM Section

CRITICAL LEAD DRESS

RC-1205C

1. Dress R3 and R9 up and away from all other components.
2. Keep 10.7 mc IF grid and plate wiring short and close to chassis.
3. Dress L3 close to chassis.
4. Keep heater leads away from audio grid circuits.
5. Dress C46 and C48 and AC wiring up and away from audio components.

RS-177H

1. Dress all heater leads flat along bottom of chassis.
2. Use minimum lead length on all resistors between V401 and V402 and terminal board.
3. Dress feed back leads between terminal board near output transformers and V401 and V402, along inside corner of chassis and then along back side of terminal board near V401 and V402.
4. Dress plate leads from output transformers to output tubes down center of chassis away from feed back leads.
5. Dress power resistors R426, R427, and R428 well away from chassis. All insulated leads are to be dressed away from these resistors.

RCA VICTOR Continuation of service material on Tuner Chassis RC-1205C, for list of models using this chassis see preceding page at left, material on Amplifier Chassis RS-177H and RS-199B is on the next page, over.

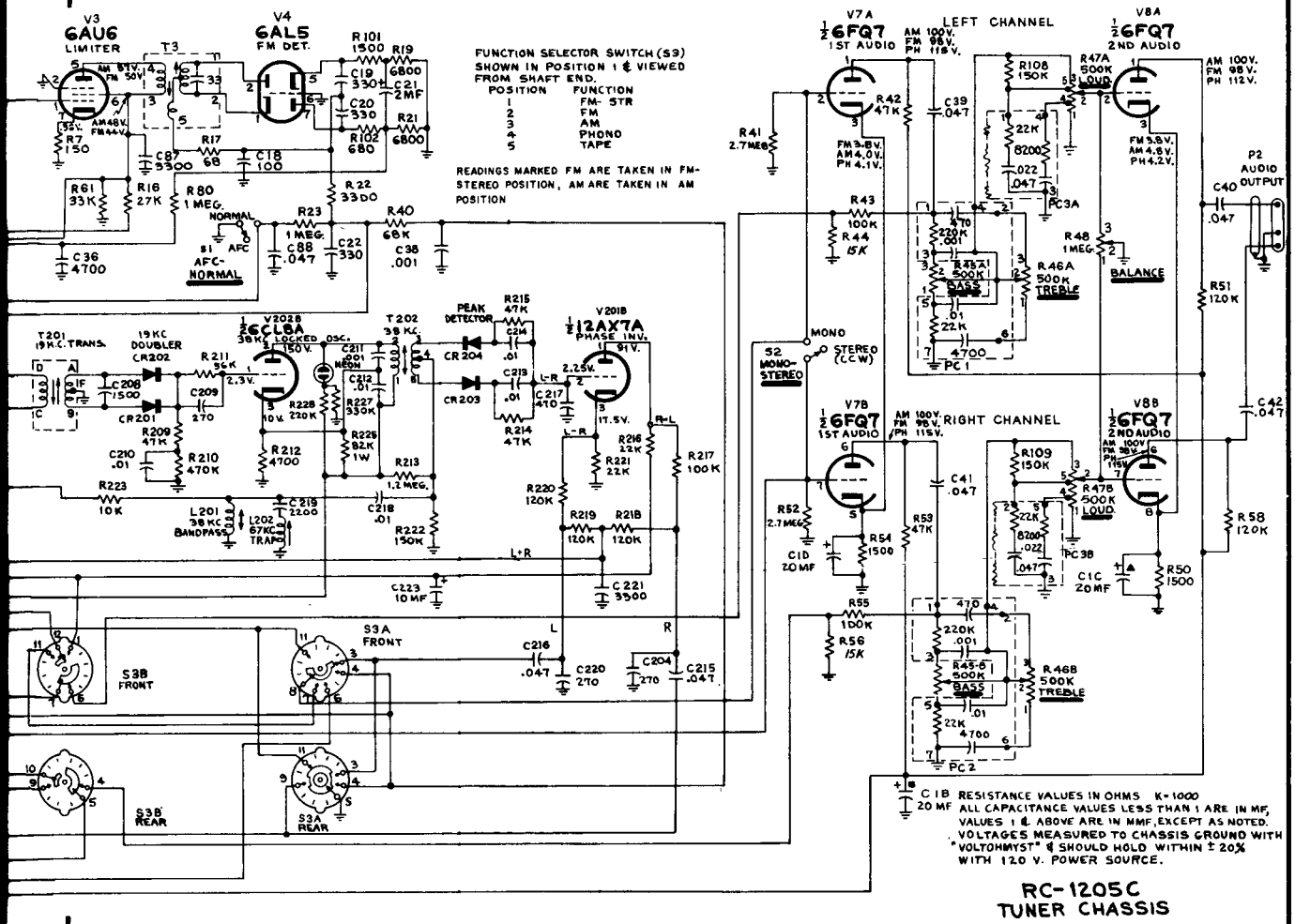

RC-1205C
TUNER CHASSIS

SPEAKER PHASING

The two speaker systems must be properly connected in order to have "in-phase" sound outputs. Incorrect connections will be evidenced by "loss of bass" or distortion in the sound when playing a monophonic recording and listening from a point midway between the two speaker systems. Similarly the speakers in each system must be phased with each other.

To maintain correct phasing, the speaker connections as shown should be closely followed.

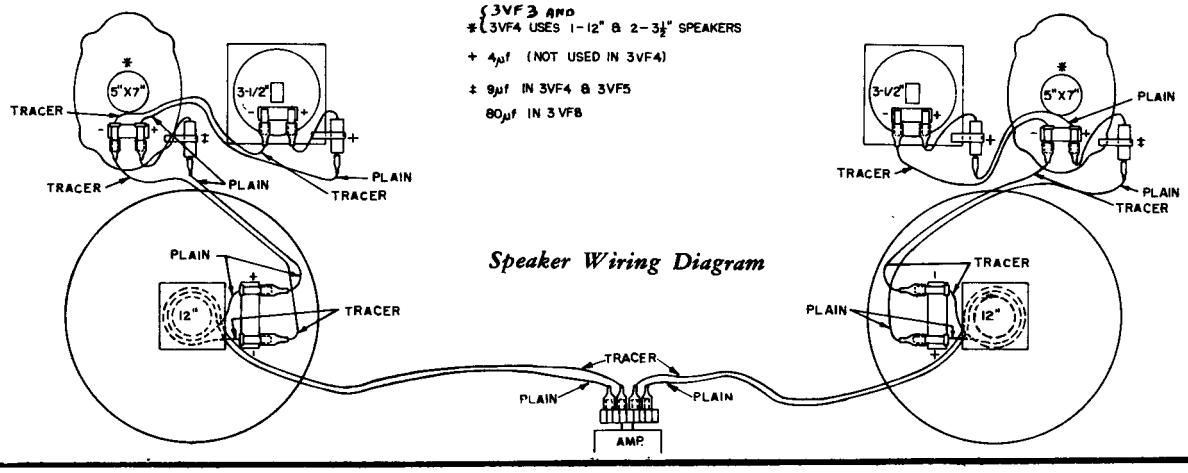

Speaker Wiring Diagram

RCA VICTOR Amplifier Chassis RS-177H and RS-199B, for list of models using these chassis, associated tuner data, etc., see preceding two pages.

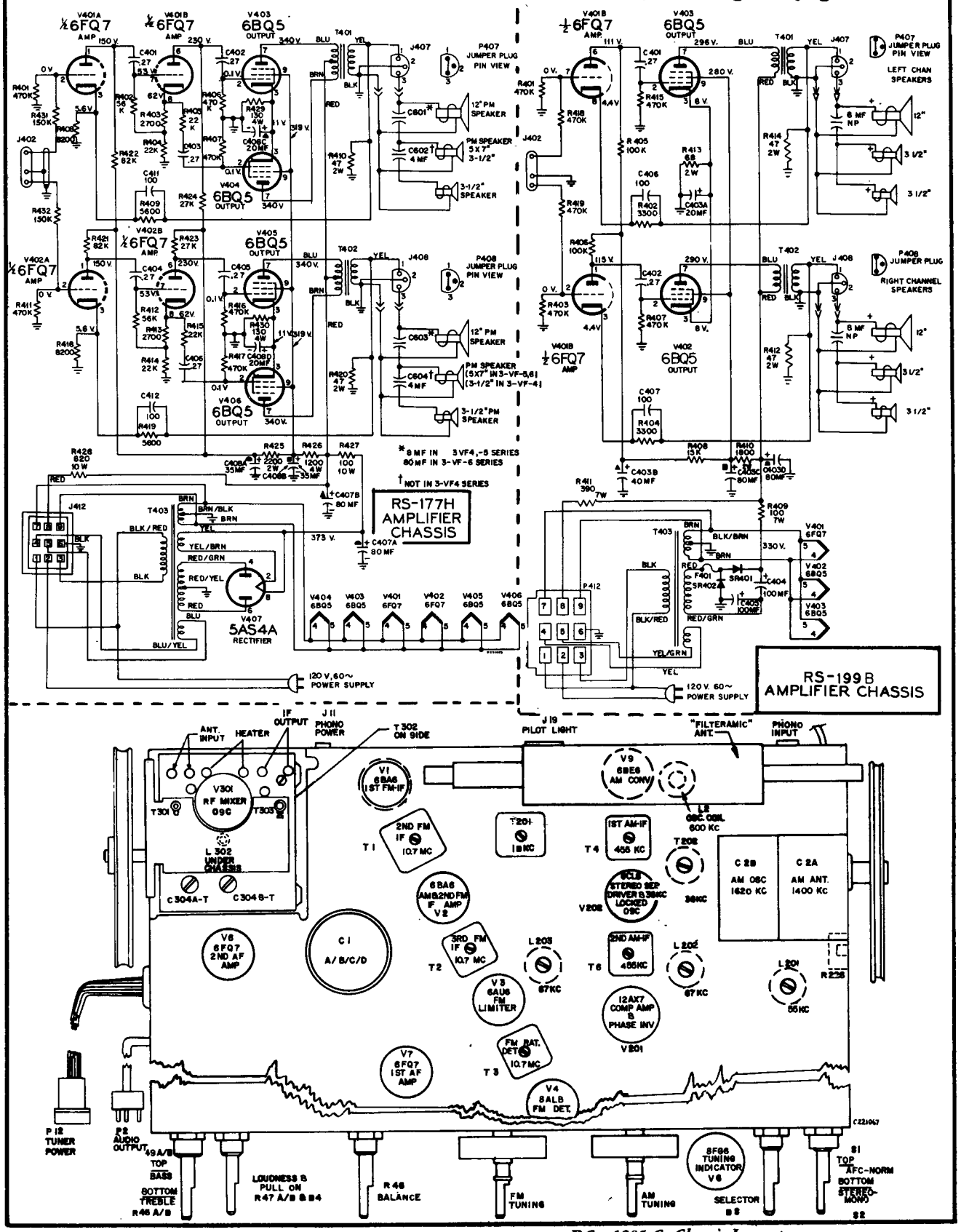

RC—1205 C Chassis Layout

RCA VICTOR

4RG1 Series, Models 4RG11, 4RG12, 4RG16, Chassis RC-1208D
4RG3 Series, Models 4RG31, 4RG34, Chassis RC-1208H

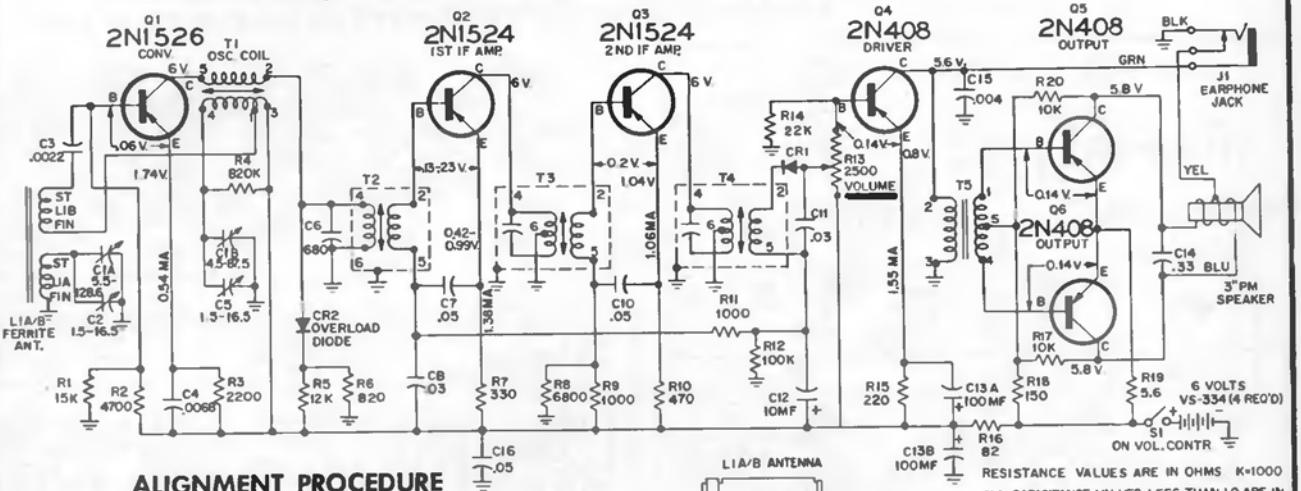

RESISTANCE VALUES ARE IN OHMS K=1000

ALL CAPACITANCE VALUES LESS THAN 1.0 ARE IN MF, THOSE ABOVE 1.0 ARE IN MMF EXCEPT AS NOTED.

VOLTAGES MEASURED WITH "VOLTOHMYST" FROM BATTERY(+) & SHOULD WITHIN ± 20% WITH A NEW BATTERY

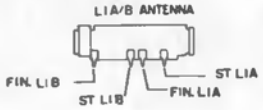

ALIGNMENT PROCEDURE

Step	Connect High Side of Signal Generator to—	Signal Gen. Output	Dial Pointer Setting	Adjust for Max. Output
1	Antenna gang stator C1A thru .01 mf capacitor	455 kc	Gang fully open	T4 (3rd I-F)
2				T3 (2nd I-F)
3				T2 (1st I-F)
4	Repeat Steps 1, 2, and 3			
5	Short wire placed near antenna for radiated signal	1620 kc	Gang fully open	Oscillator trimmer C5
6		1400 kc	1400 kc (rock gang if necessary)	Antenna trimmer C2
7		600 kc	600 kc (rock gang)	T1 osc. coil
8	Repeat Steps 5, 6, and 7.			

CHASSIS REMOVAL

Remove tuning knob. Open case

Remove two screws—one at each corner—located near antenna. Remove two screws located between positive battery contacts.

If speaker is connected to board by wires, unsolder wires at board.

Lift slightly the end of each board that was secured by screws and slide boards out of slots which hold opposite ends.

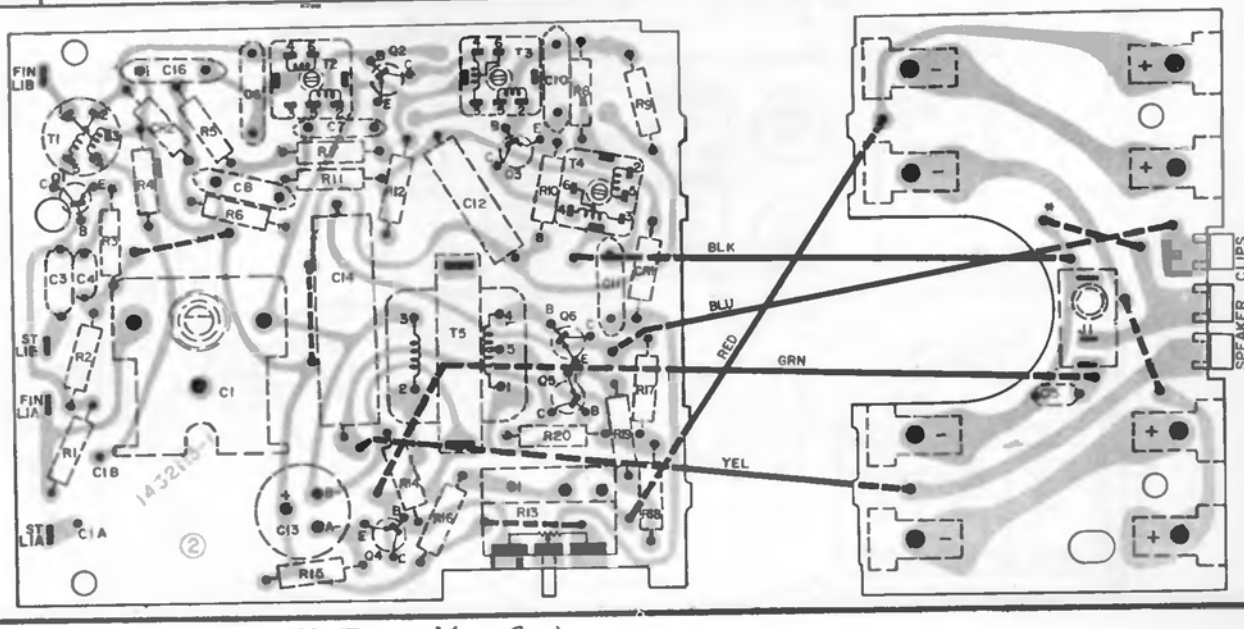

Wiring Side (Removed from Case)

RCA VICTOR

Models 4VF304, 4VF325, 4VF326, 4VF348, 4VF349, 4VF405, 4VF446, 4VF464, 4VF480, 4VF488, 4VF534, use Tuner Chassis RC-1211A covered across these two pages, and Amplifier Chassis RS-177J or RS-199C which are very similar to amplifier chassis of the number (but different suffix) covered on the preceding page.

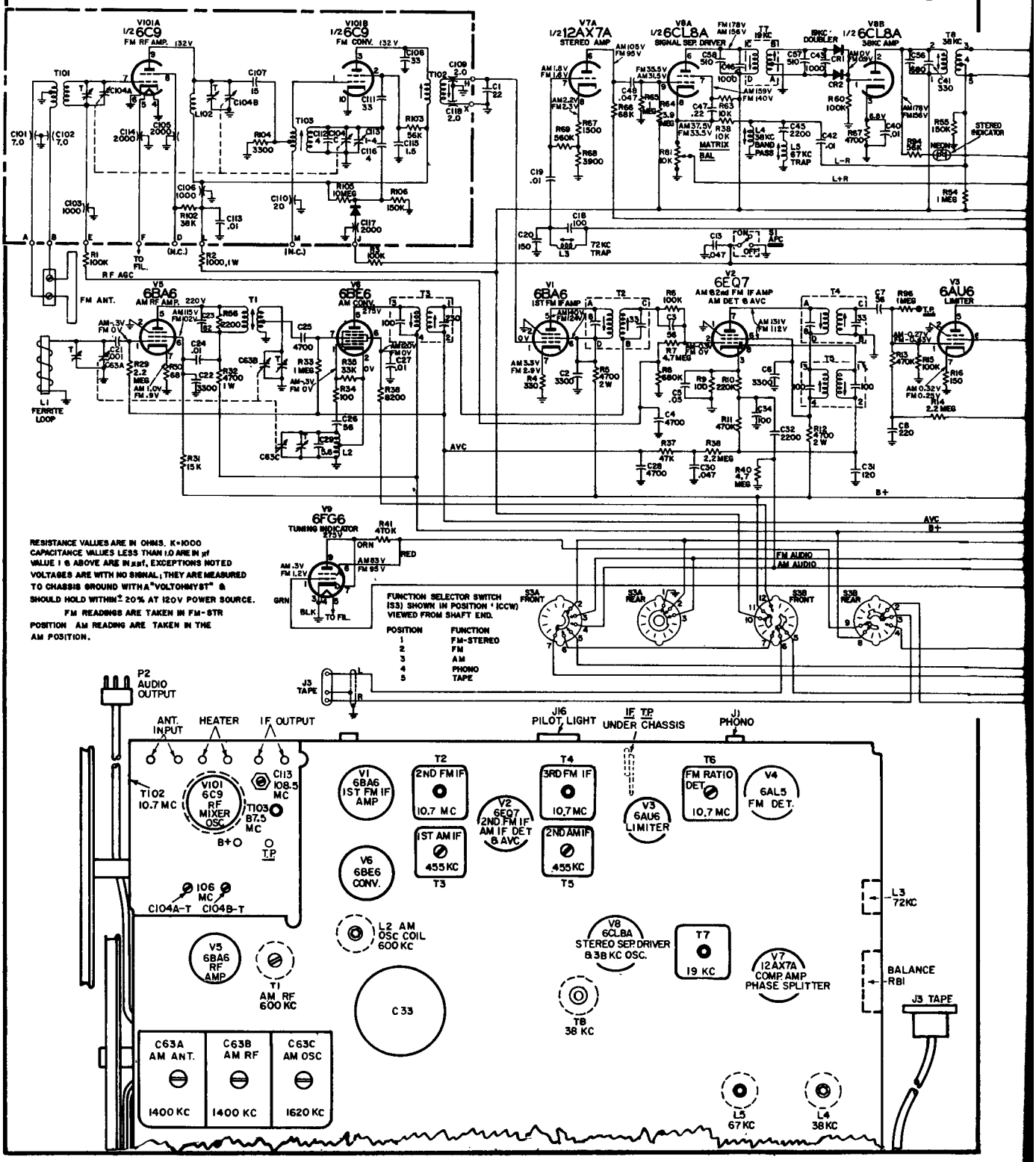

RCA VICTOR

Models 4VF304, 4VF325, 4VF326, 4VF348, 4VF349, 4VF405, 4VF446, 4VF464, 4VF480, 4VF488, 4VF534, use Tuner Chassis RC-1211A covered across these two pages, and Aplifier Chassis RS-177J or RS-199C which are similar to amplifier chassis of corresponding number (but different suffix) of previous section.

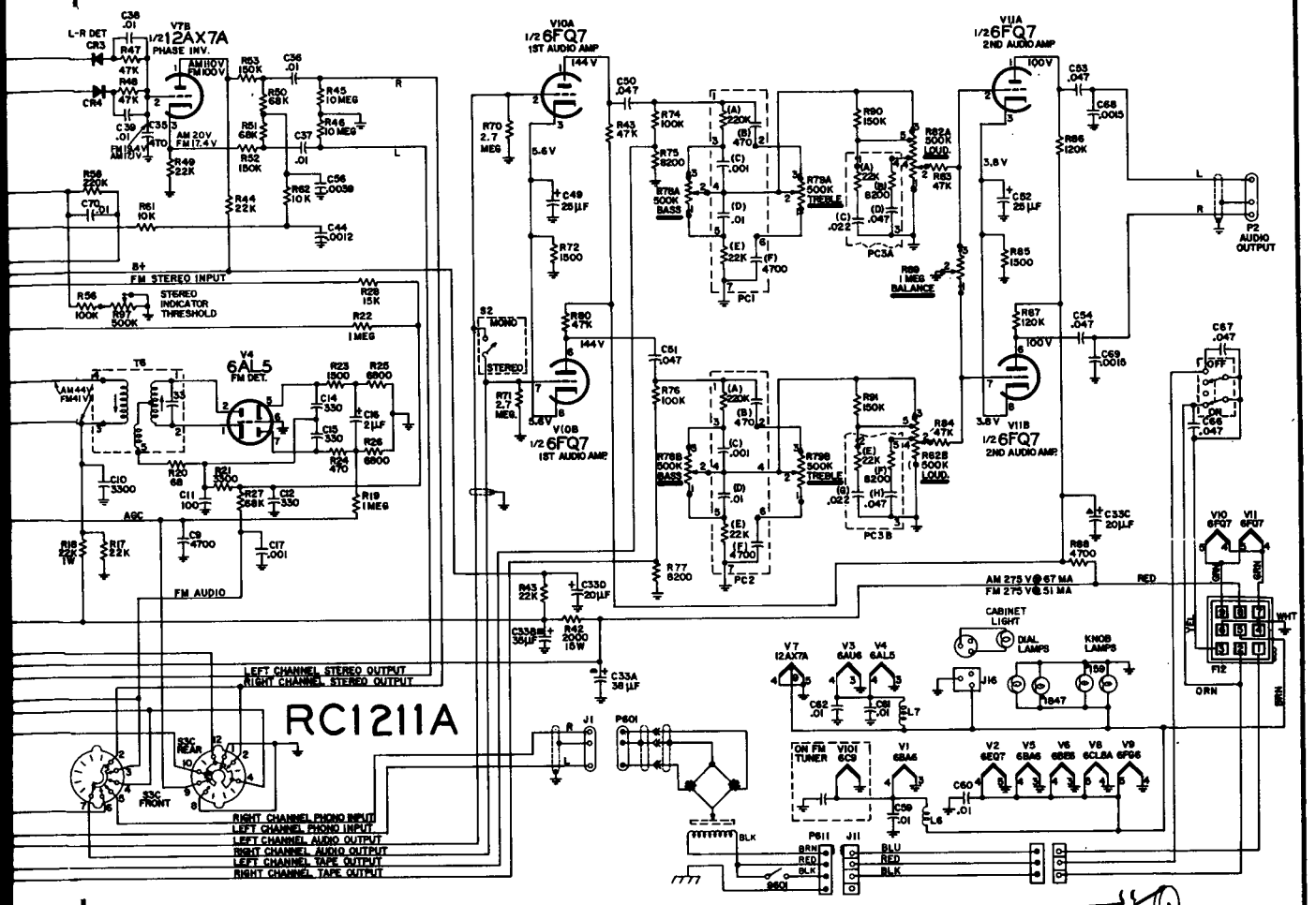

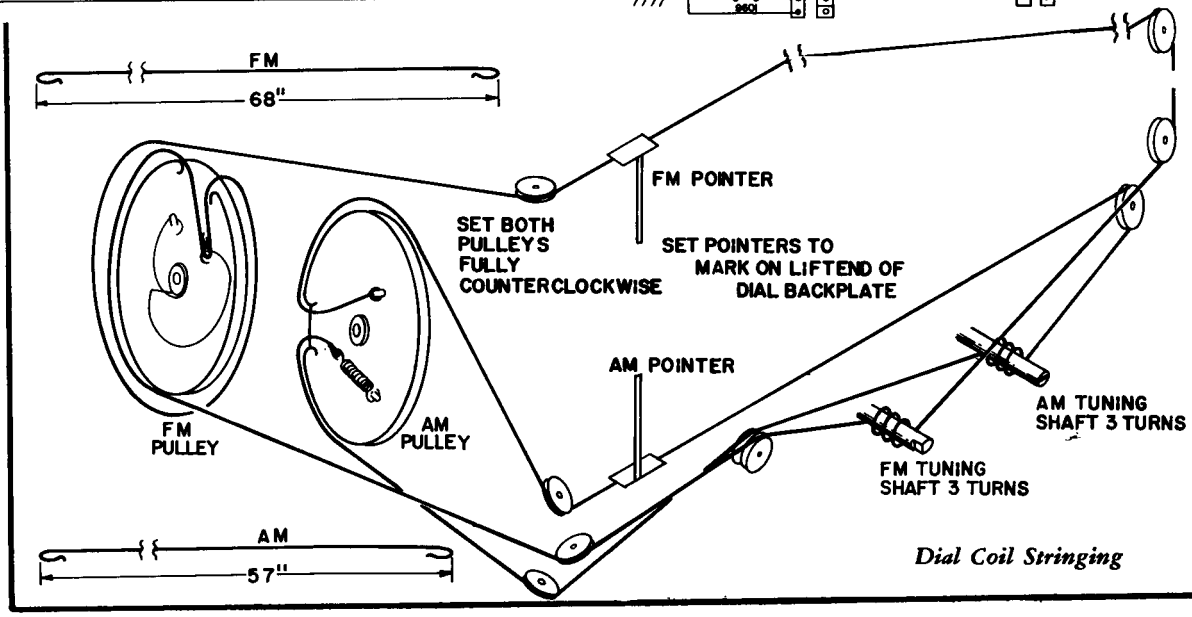

Dial Coil Stringing

RCA Victor Models 4VF095, 4VF096, 4VF105, 4VF106, 4VF114, 4VF124, 4VF145, 4VF146, 4VF155, 4VF156, 4VF206, 4VF224, 4VF282, 4VF289, use Chassis RC-1215A & B Tuner and Amplifier Chassis RS-203A, schematics across these two pages and other service material on the page following.

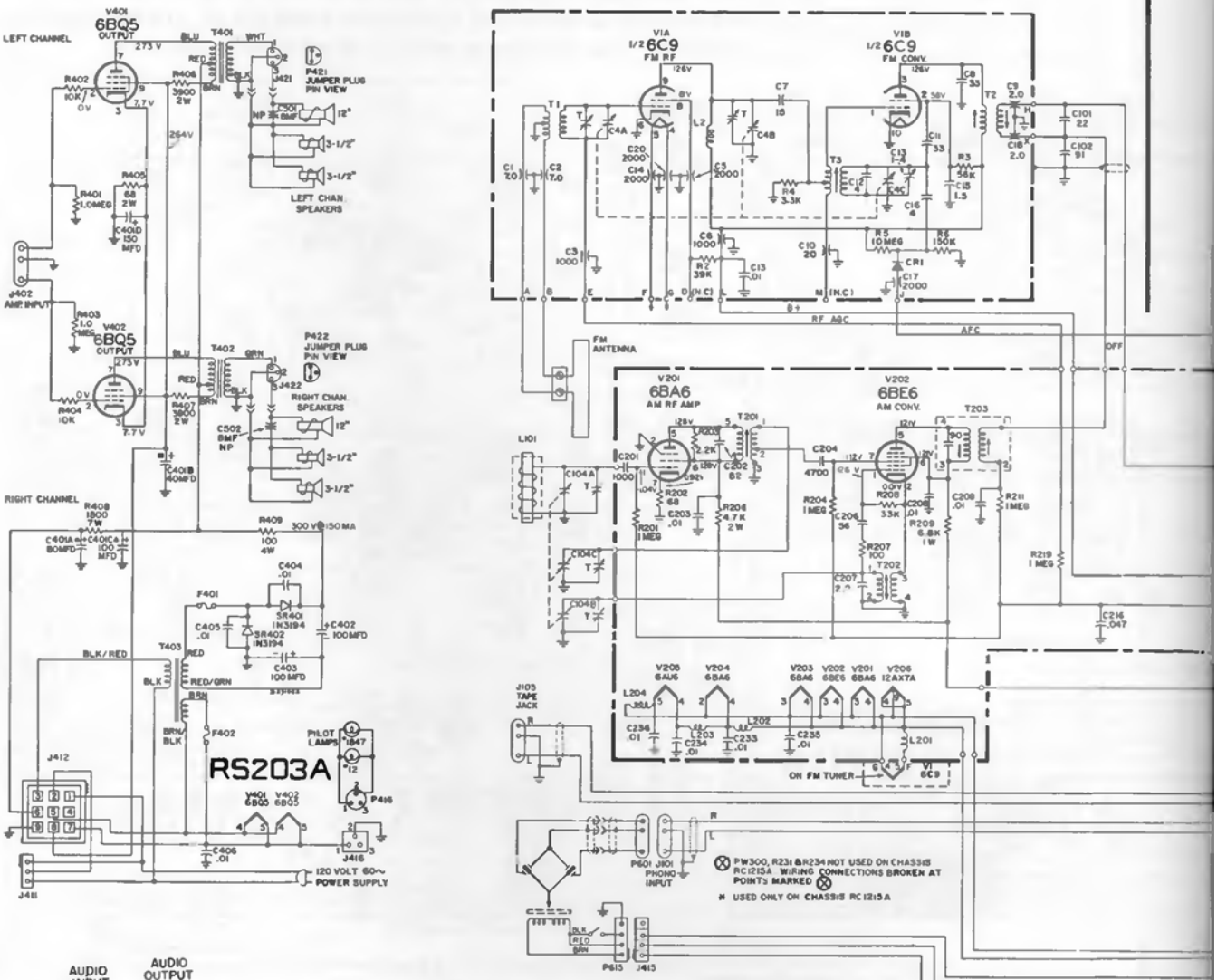

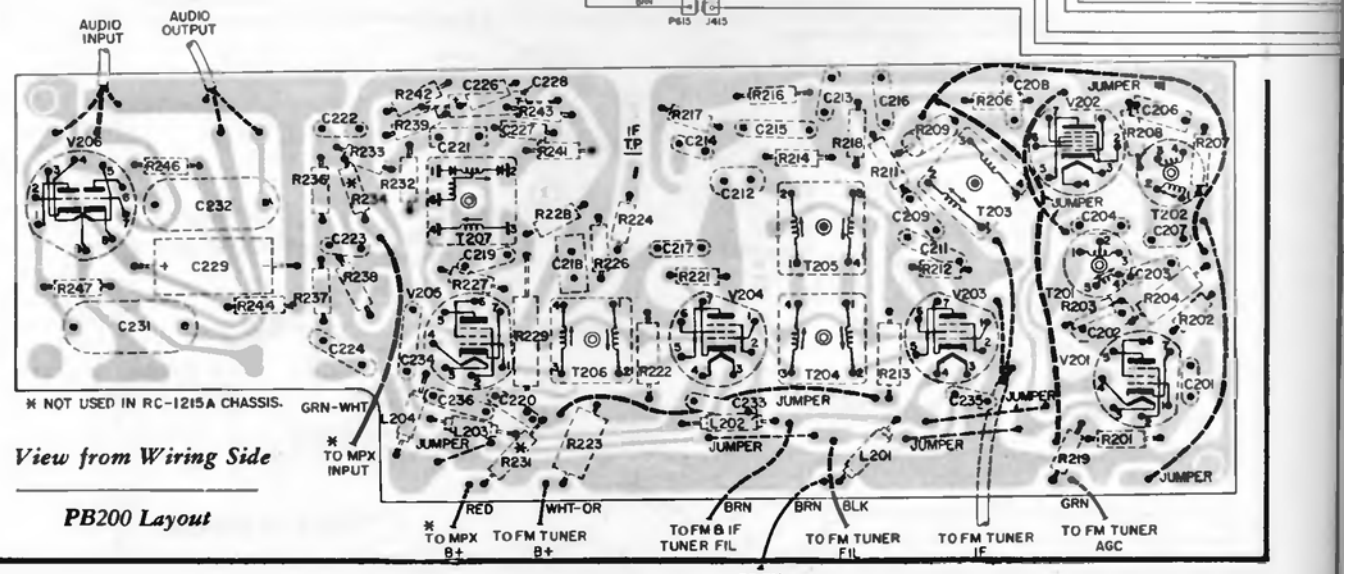

View from Wiring Side

PB200 Layout

RCA Victor Models 4VF095, 4VF096, 4VF105, 4VF106, 4VF114, 4VF124, 4VF145, 4VF146, 4VF155, 4VF156, 4VF206, 4VF224, 4VF282, 4VF289, use Tuner Chassis RC-1215A & B and Amplifier Chassis RS-203A, schematics printed across these two pages and other material on the page following.

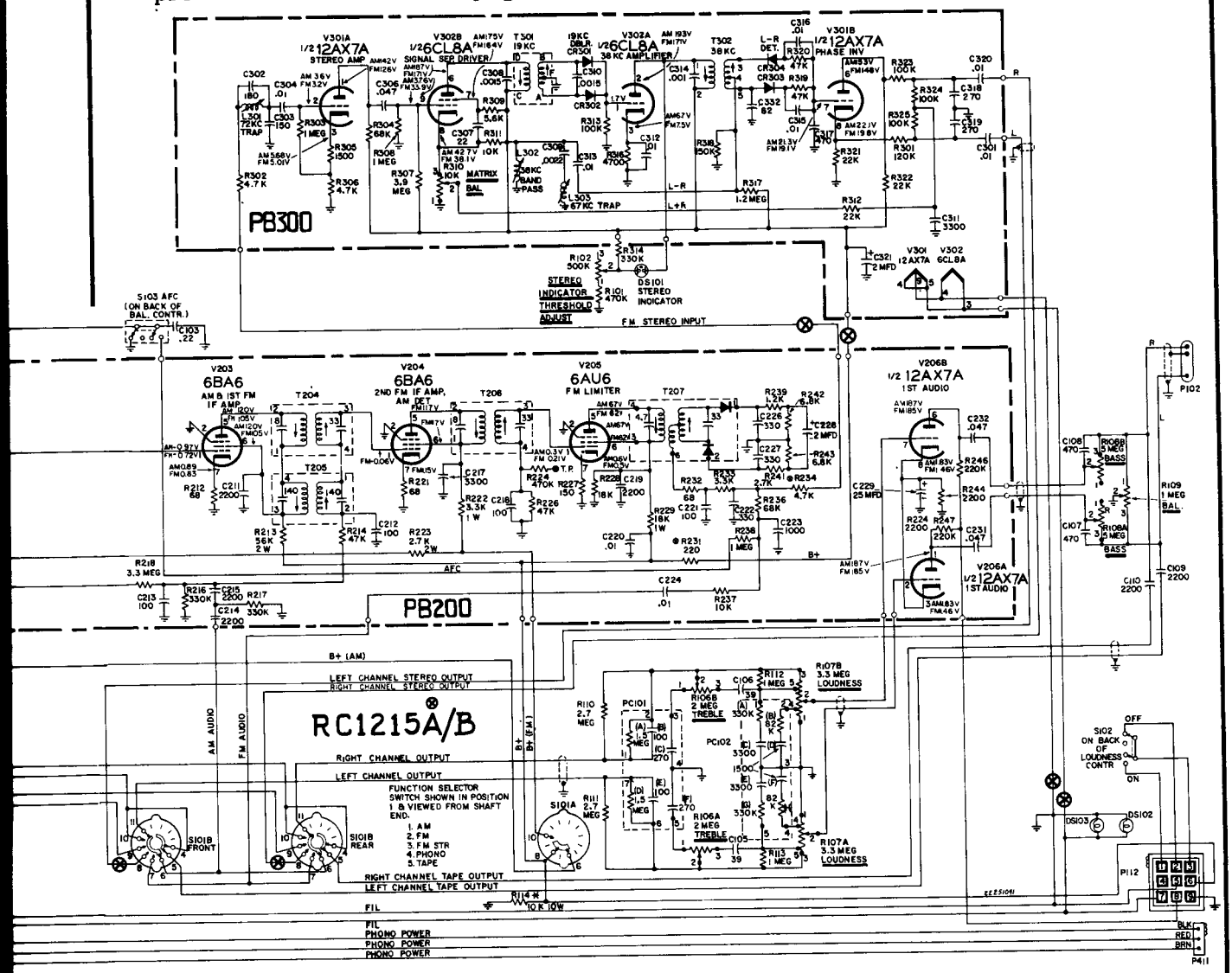

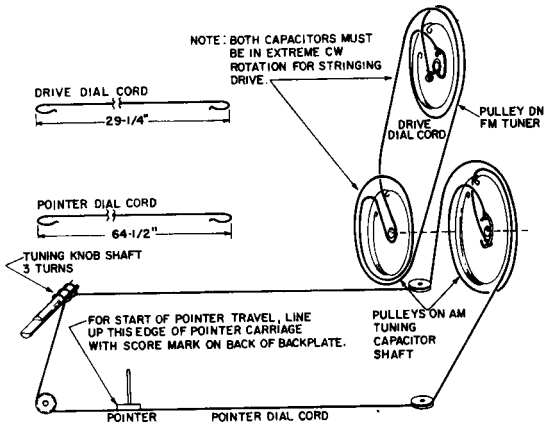

Dial Cord Arrangement

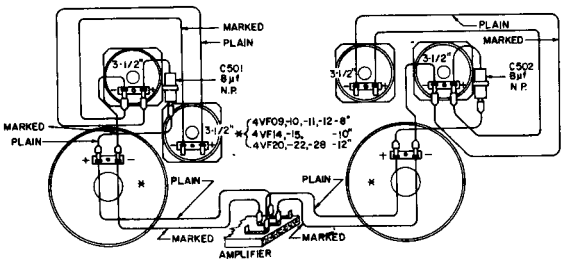

Speaker Wiring

RCA Victor Models 4VF095, 4VF096, 4VF105, 4VF106, 4VF114, 4VF124, 4VF145, 4VF146, 4VF155, 4VF156, 4VF206, 4VF224, 4VF282, 4VF289, use Tuner Chassis RC-1215A & B, Amplifier RS-203A, material continued.

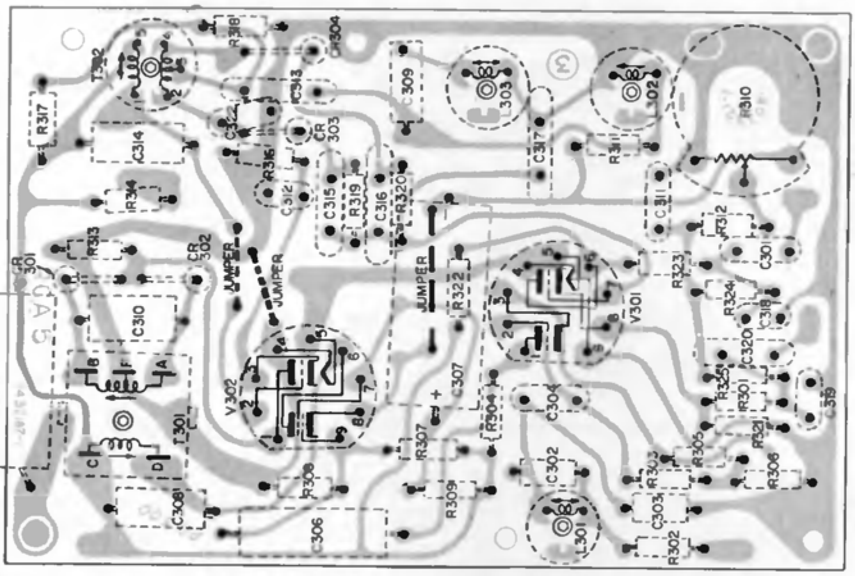

PB300 Layout *View from Wiring Side*

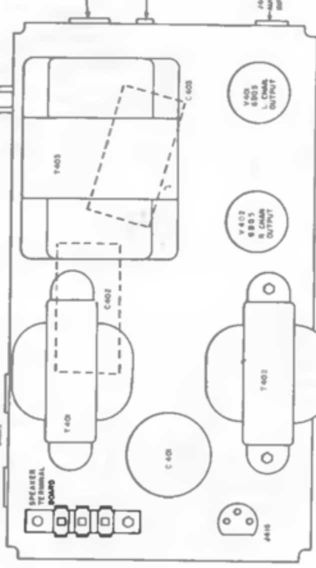

RS-203A Chassis Layout

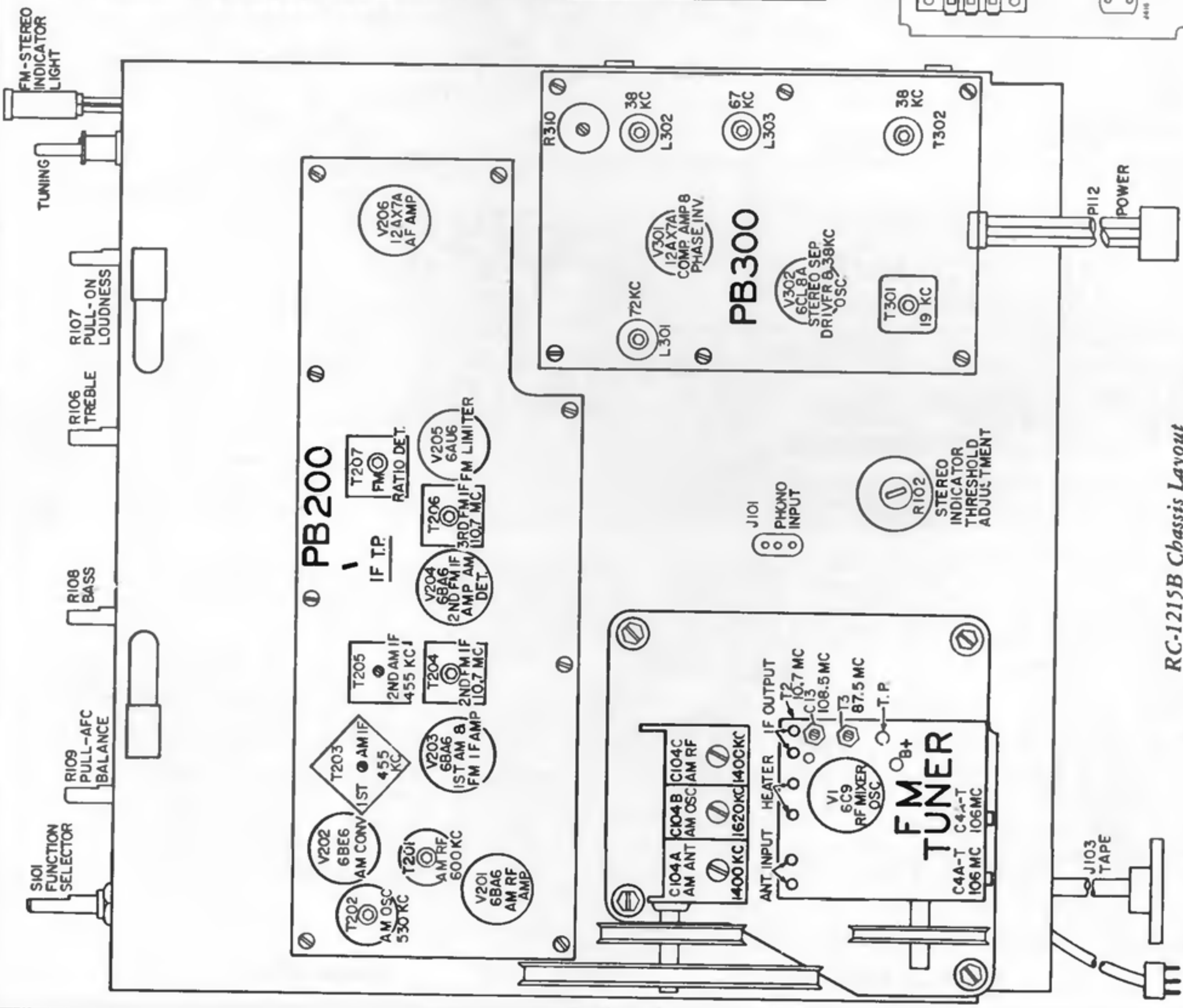

RC-1215B Chassis Layout

(RC-1215A chassis layout is same as above except PB300 is omitted)

RCA VICTOR

4RG6 Series, Models 4RG61, 4RG62, 4RG66, Chassis RC-1214A;

4RG5 Series, Models 4RG51, 4RG52, 4RG56, also use the same chassis and are electrically the same, but are positioned differently in the case and do not use a dial light.

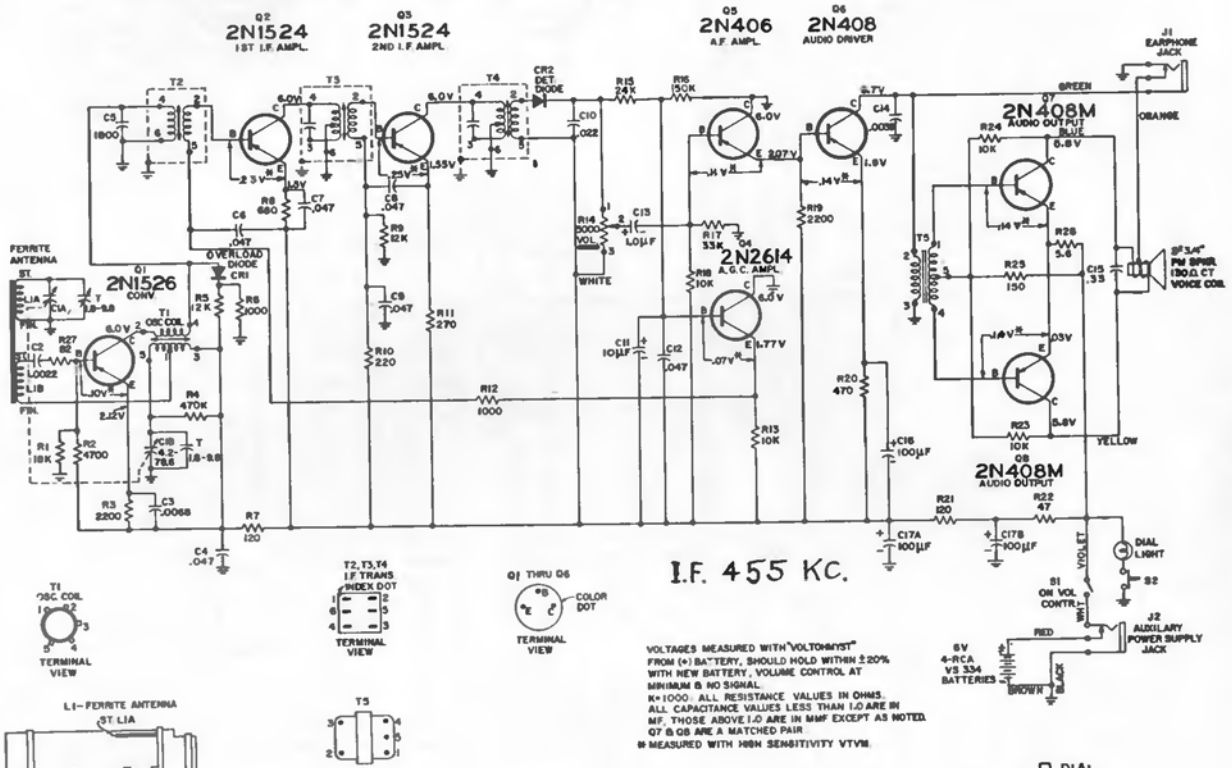

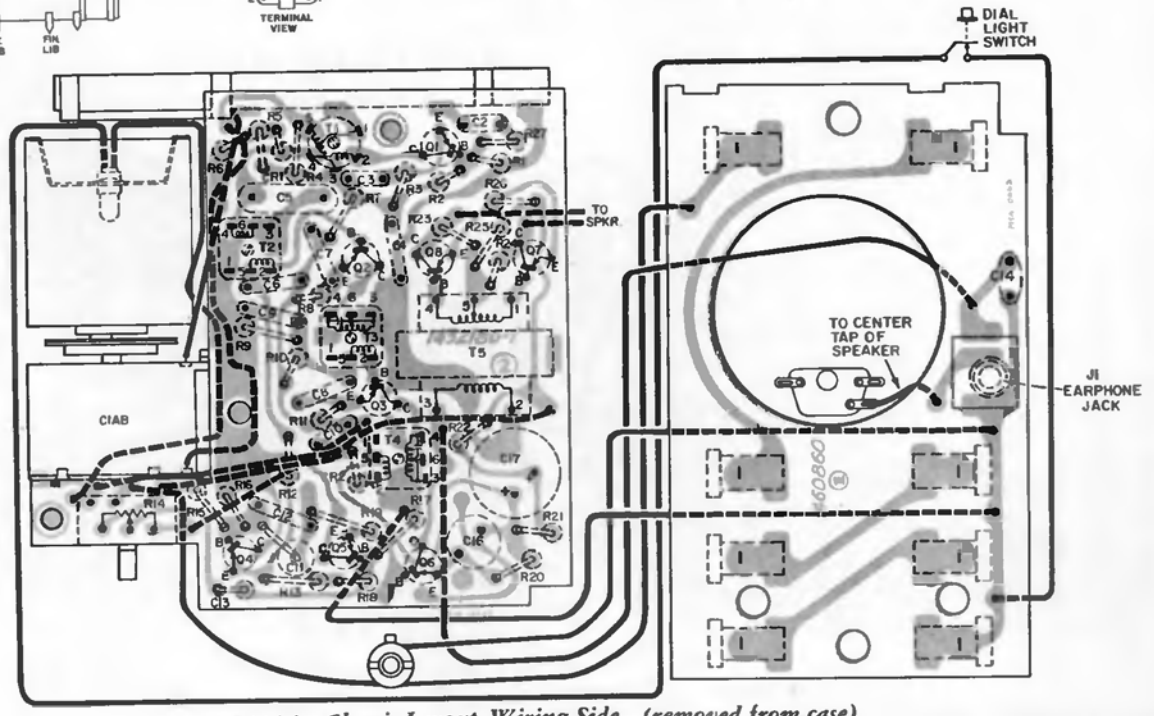

RC-1214A Chassis Layout, Wiring Side (removed from case)

SEARS, ROEBUCK AND CO.

Silvertone

CHASSIS 132.75901
MODEL 4001, 4002, 4003

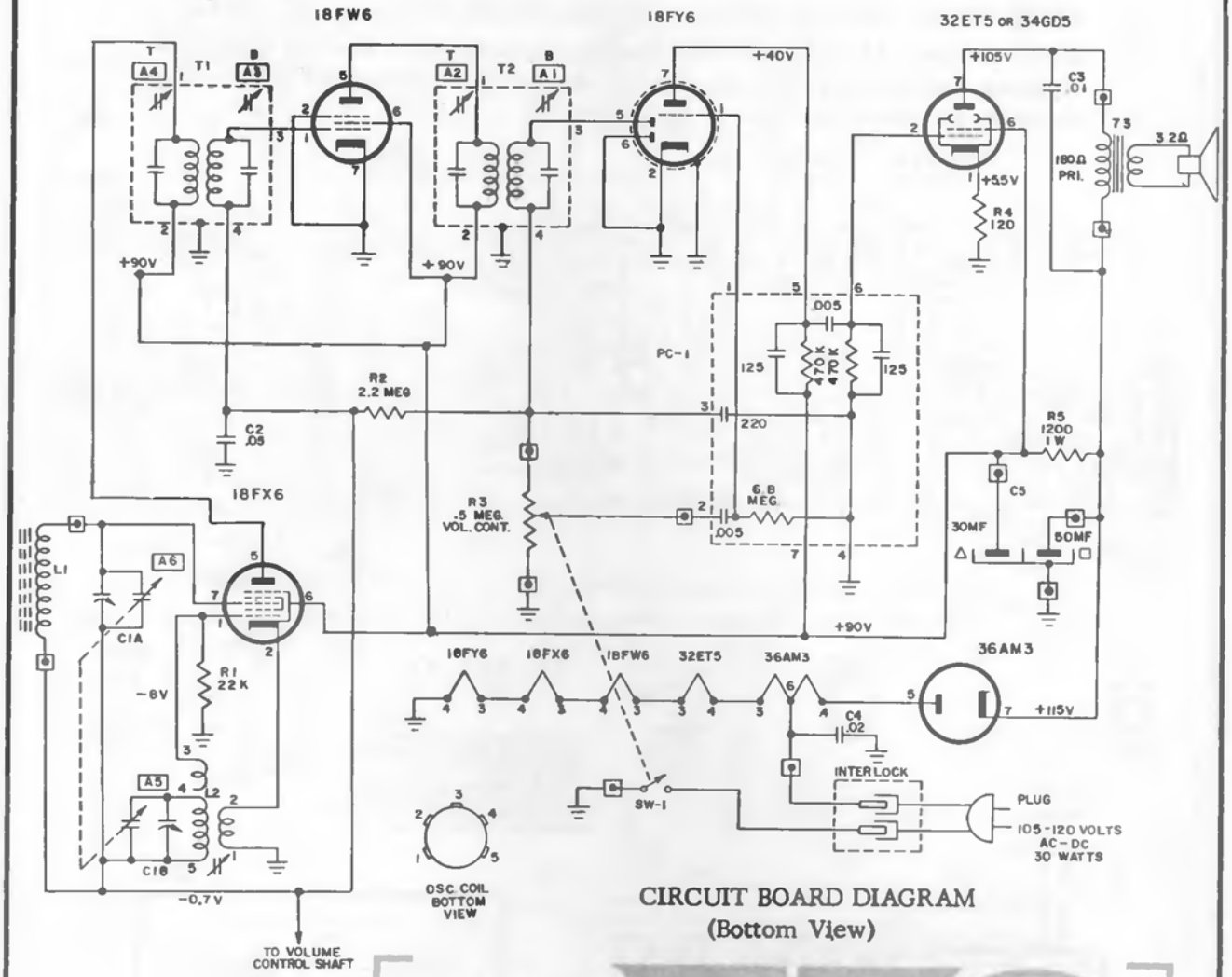

CIRCUIT BOARD DIAGRAM
(Bottom View)

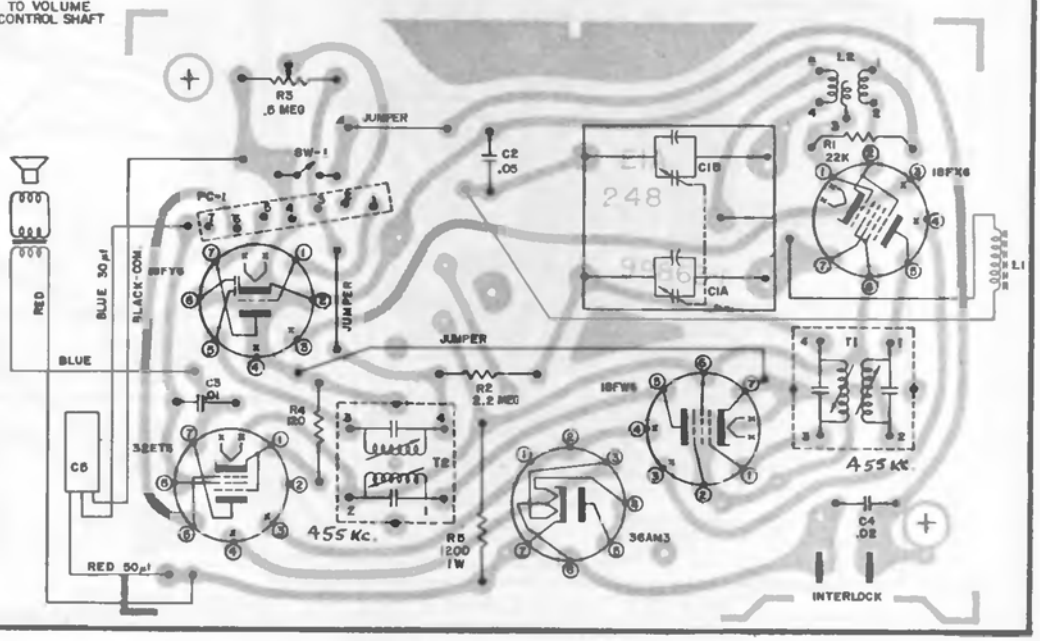

⏚ = B-
⊡ = EXTERNAL CONNECTIONS TO PRINTED BOARD.
VOLTAGES MEASURED WITH A V.T.V.M.
RESISTANCE VALUES ARE IN OHMS K = 1,000, MEG = 1,000,000.
CAPACITANCE VALUES LESS THAN (1) ARE IN MICROFARADS (μf) AND VALUES OF (1) OR GREATER ARE (μμf) MICROMICROFARADS (μμf), UNLESS OTHERWISE INDICATED.

SEARS, ROEBUCK & CO. Chassis 528.54400, Model 4030

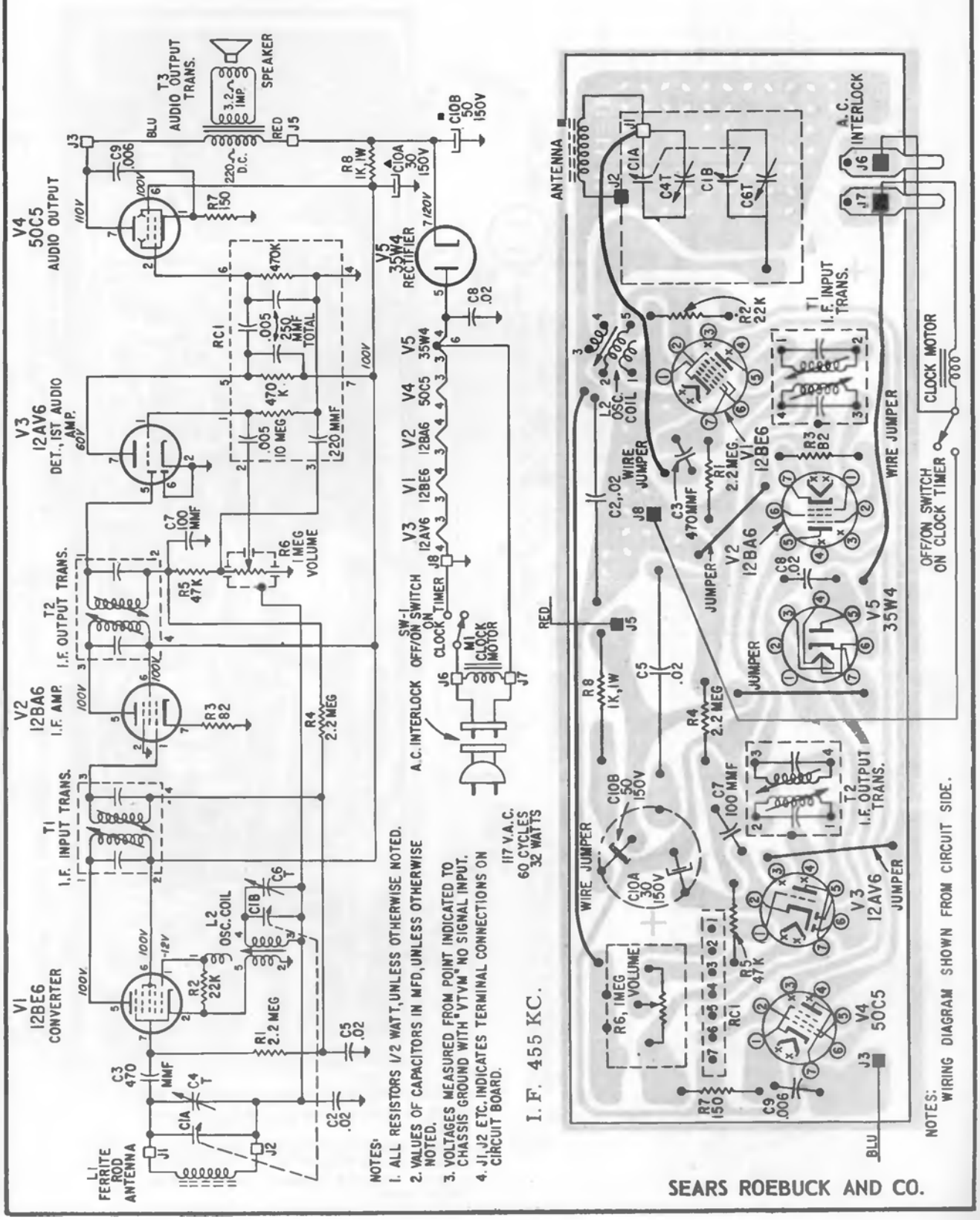

SEARS, ROEBUCK & CO. Chassis 528.53500, Models 4032, 4033, 4034

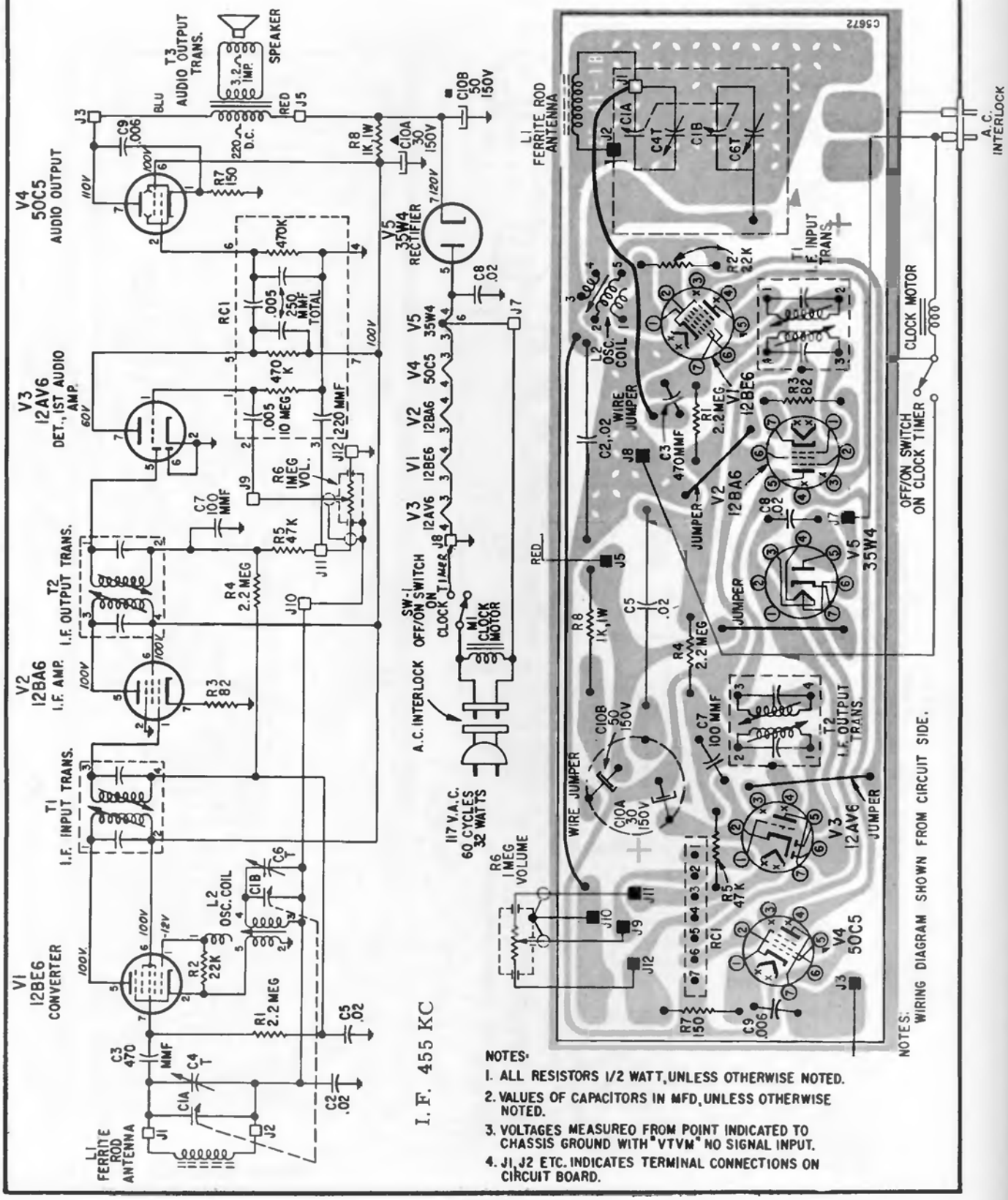

NOTES:
WIRING DIAGRAM SHOWN FROM CIRCUIT SIDE.

NOTES:

1. ALL RESISTORS 1/2 WATT, UNLESS OTHERWISE NOTED.
2. VALUES OF CAPACITORS IN MFD, UNLESS OTHERWISE NOTED.
3. VOLTAGES MEASUREO FROM POINT INDICATED TO CHASSIS GROUND WITH "VTVM" NO SIGNAL INPUT.
4. J1, J2 ETC. INDICATES TERMINAL CONNECTIONS ON CIRCUIT BOARD.

SEARS, ROEBUCK and CO.

Chassis 528.54670,
Models 4043, 4044

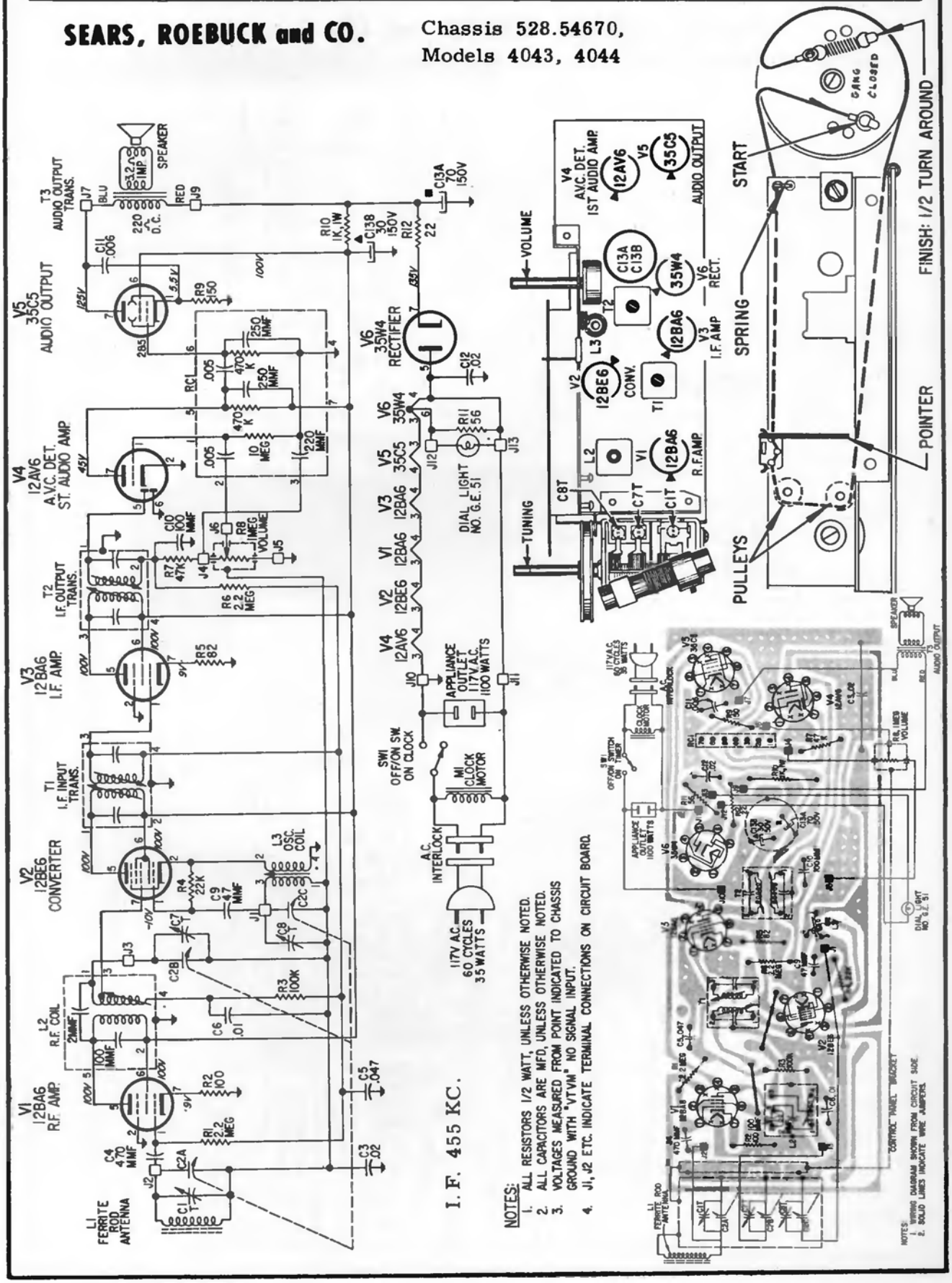

SEARS, ROEBUCK and CO.

SEARS, ROEBUCK & CO. Chassis 528.54880, Models 4079, 4080, 4081, 4082

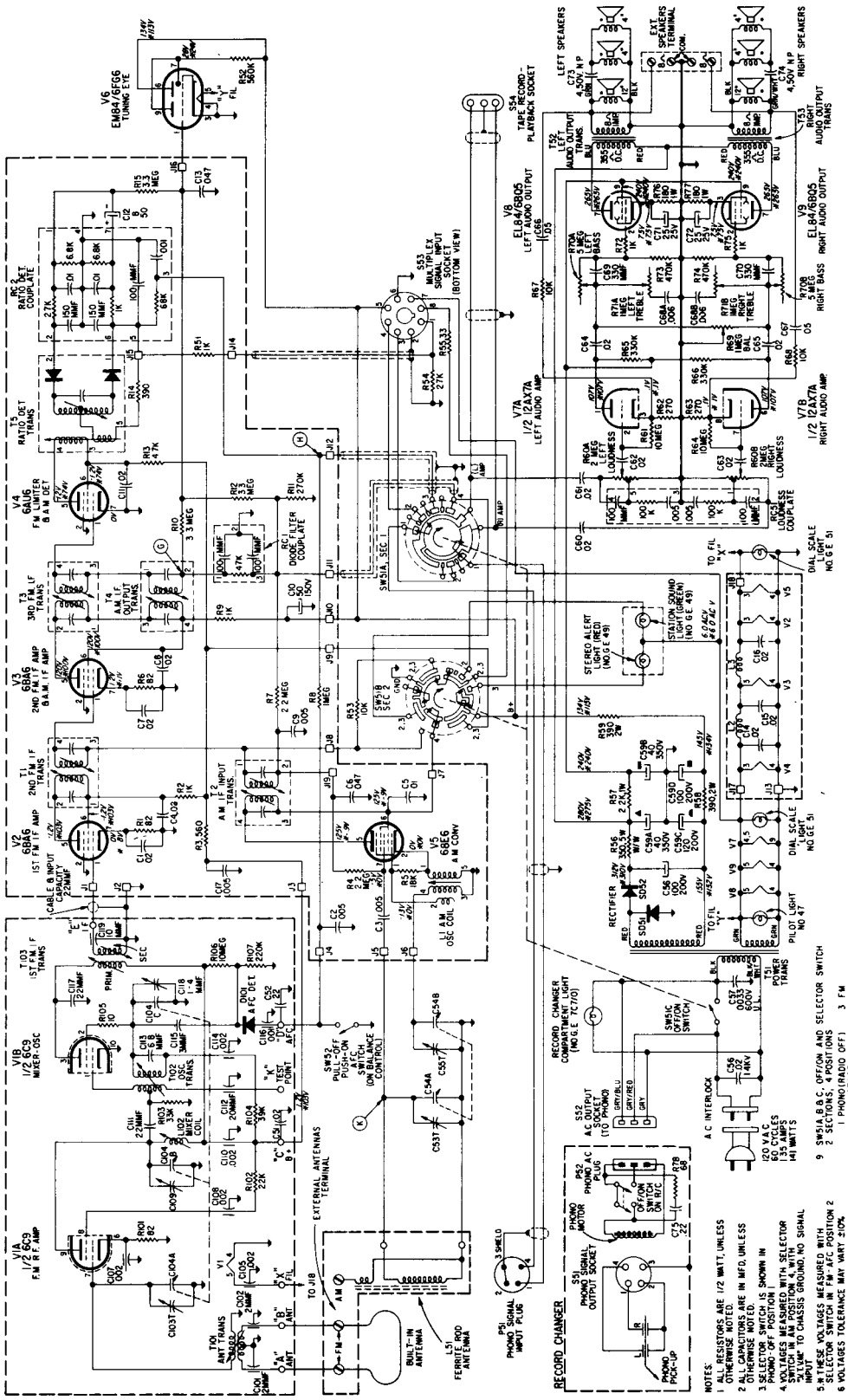

A. M. I. F. 455 KC.
F. M. I F. 10.7 MC.

SEARS, ROEBUCK & CO. Chassis 528.54880, Models 4079, 4080, 4081, 4082

SONY TR-727

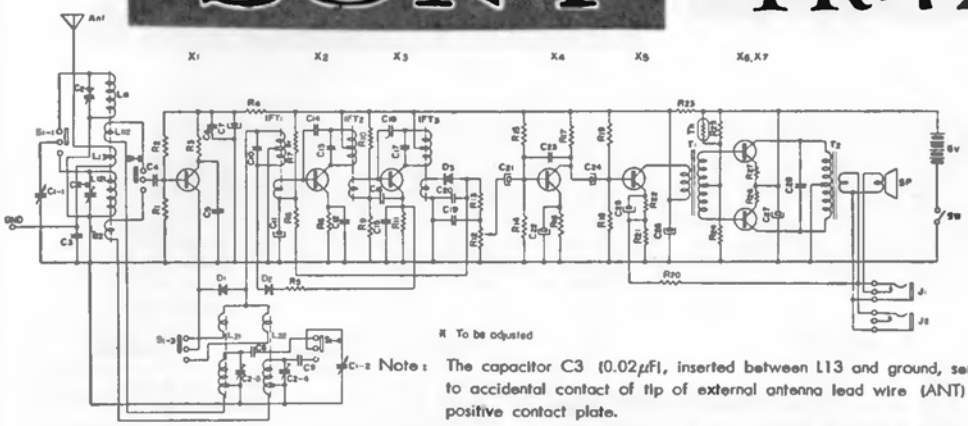

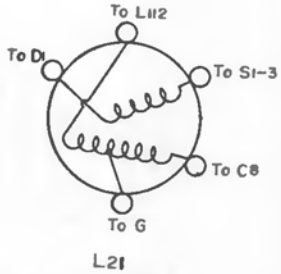

Note: The capacitor C3 (0.02μF), inserted between L13 and ground, serves to prevent shortcircuit of battery due to accidental contact of tip of external antenna lead wire (ANT) or of ground lead wire and battery positive contact plate.

Frequency Coverage: MW 535 Kc—1,605 Kc
SW 3.9 Mc—12 Mc

IF Frequency: 455 Kc

Mounting Diagram for TR-727 —Mounted Side—

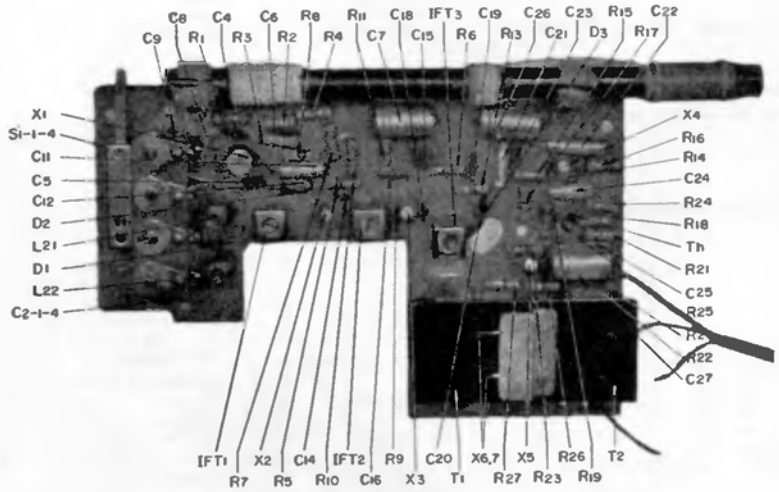

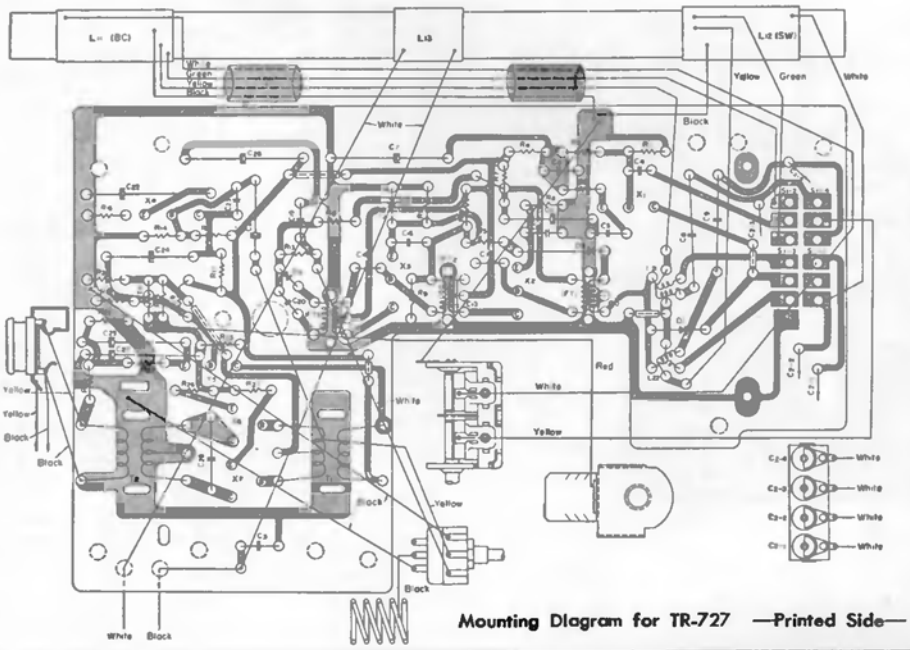

Mounting Diagram for TR-727 —Printed Side—

Electronic Parts List for TR-727

Parts No.	Symbol	Description
1-401-118-00	L_{11}, L_{12}, L_{13}	Ferrite Bar Antenna
1-405-003-01	L_{21}	MW, Oscillator Coil
1-405-004-01	L_{22}	SW, Oscillator Coil
1-513-086-00	S_{1-1-4}	Band Setting Switch
1-403-034-00	IFT_1	IF Transformer
1-403-035-00	IFT_2	〃
1-403-036-00	IFT_3	〃
1-423-043-00	T_1	Driving Transformer
1-427-061-00	T_2	Output Transformer
1-507-030-20	$J_{1,2}$	Twine Earphone Jack
1-502-063-00	SP	Speaker, 8Ω
	X_1	Transistor 2SA70
	X_2	〃 2SC769
	X_3	〃 2SC768
	X_4	〃 2SD651
	X_5	〃 2SD650
	X_6	〃 2SB513
	X_7	〃 2SB513
	D_1	Diode 1T26G
	D_2	〃 1T23G
	D_3	Diode 1T23G
	Th	Thermistor S-90
1-203-130-00	R_1	Carbon Resistor 18 KΩ RD 1/4L ± 5%
1-203-058-00	R_2	〃 3.3 KΩ 〃
1-203-049-00	R_3	〃 2.2 KΩ 〃
1-203-049-00	R_4	〃 2.2 KΩ 〃
1-203-031-00	R_5	〃 1 KΩ 〃
1-203-065-00	R_6	〃 5.6 KΩ 〃
1-203-583-00	R_7*	〃 64 KΩ 〃
1-203-026-00	R_8	〃 470Ω 〃
1-203-058-00	R_9	〃 3.3 KΩ 〃
1-203-129-00	R_{10}	〃 27 KΩ 〃
1-203-024-00	R_{11}	〃 330Ω 〃
1-221-231-00	R_{12}	Potentiometer 5 KΩ
1-203-026-00	R_{13}	Carbon Resistor 470Ω RD 1/4L ± 5%
1-203-065-00	R_{14}	〃 5.6 KΩ 〃
1-203-130-00	R_{15}	〃 18 KΩ 〃
1-203-031-00	R_{16}	〃 1 KΩ 〃
1-203-058-00	R_{17}	Carbon Resistor 3.3 KΩ RD 1/4L ± 5%
1-203-058-00	R_{18}	〃 3.3 KΩ 〃
1-203-065-00	R_{19}	〃 5.6 KΩ 〃
1-203-011-00	R_{20}	〃 100Ω 〃
1-203-001-00	R_{21}	〃 5.1Ω 〃
1-203-018-00	R_{22}	〃 220Ω 〃
1-203-011-00	R_{23}	〃 100Ω 〃
1-203-049-00	R_{24}	〃 2.2 KΩ 〃
1-203-011-00	R_{25}	〃 100Ω 〃
1-203-584-00	R_{26}	〃 3Ω 〃
1-203-584-00	R_{27}	〃 3Ω 〃
1-151-057-00	C_1	Tuning Capacitor 2 Gang
1-141-109-00	C_2	Trimmer Capacitor 4 Unit
1-101-073-00	C_3	Ceramic Capacitor 0.02μF ± 80%
1-101-072-00	C_4	〃 0.01μF 〃
1-101-098-00	C_5	〃 0.005μF 〃
1-101-072-00	C_6	〃 0.01μF 〃
1-119-010	C_7	Electrolytic Capacitor 100μF 6V
1-103-046	C_8	Styrol Capacitor 370pF ± 5%
1-103-038	C_9	Styrol Capacitor 3000pF ± 5%
	C_{10}	〃 180pF built in IFT_1
1-119-001	C_{11}	Electrolytic Capacitor 10μF 3V
1-101-073-00	C_{12}	Ceramic Capacitor 0.02μF ± 80%
	C_{13}	〃 180pF built in IFT_2
1-101-046-00	C_{14}	〃 2pF ± 0.5pF
1-101-073-00	C_{15}	〃 0.02μF ± 80%
1-101-073-00	C_{16}	〃 0.02μF 〃
	C_{17}	〃 180pF built in IFT_3
1-101-046-00	C_{18}	〃 2pF ± 0.5pF
1-101-073-00	C_{19}	〃 0.02μF ± 80%
1-101-073-00	C_{20}	〃 0.02μF 〃
1-119-001	C_{21}	Electrolytic Capacitor 10μF 3V
1-119-007	C_{22}	〃 30μF 3V
1-101-098-00	C_{23}	Ceramic Capacitor 0.005μF ± 80%
1-119-001	C_{24}	Electrolytic Capacitor 10μF 3V
1-119-007	C_{25}	〃 30μF 3V
1-119-010	C_{26}	〃 100μF 6V
1-119-010	C_{27}	〃 100μF 6V
1-105-097-00	C_{28}	Mylar Capacitor 0.3μF

SONY TR-730

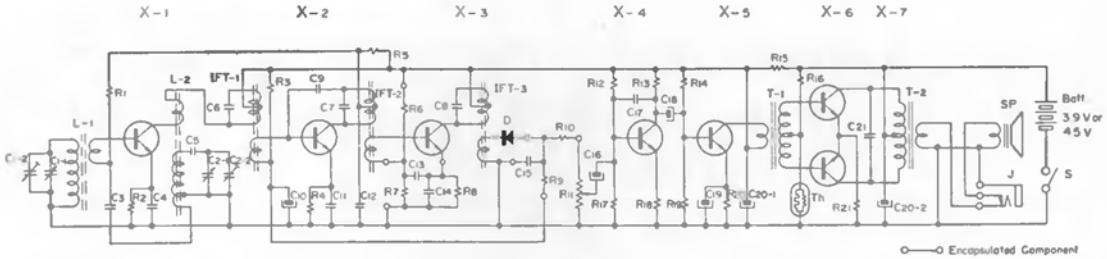

Frequency Coverage: 535 Kc ~ 1,605 Kc
IF Frequency: 455 Kc
Current Drain: 9 mA at zero signal, 42 mA at 92 mW output
Dimensions: 3″ × 2-1/4″ × 1-1/8″ (76 × 57 × 29 mm)
Weight: Less than 7 ounces (180 gr.) with Battery

To take out Circuit Board:

1) Remove one gold-plated Philips screw (plus screw) on the left side.
2) Unscrew the rear cover securing screw.
3) Open the rear cover.
4) Remove securing metal post for rear cover.
5) Remove one Philips screw (plus screw) on the chassis near volume knob.

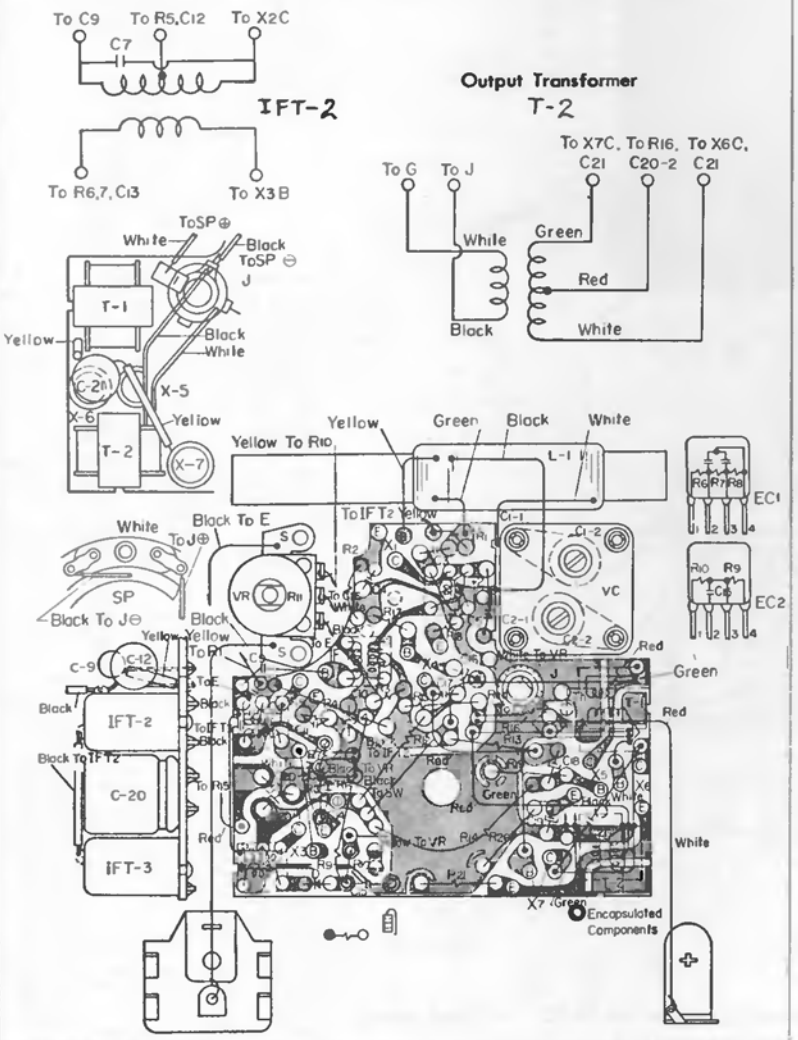

Parts No.	Symbol	Description
1-401-108-01	L_1	Ferrite Bar Antenna
1-405-001-	L_2	Oscillator Coil
1-403-057-00	IFT_1	IF Transformer
1-403-058-00	IFT_2	〃
1-403-059-00	IFT_3	〃
1-423-042-	T_1	Driving Transformer
1-427-059-	T_2	Output 〃
1-502-044	Sp	Speaker
1-507-038-01	J	Earphone Jack
	X_1	Transistor 2SC73
	X_2	〃 2SC75
	X_3	〃 2SC76
	X_4	〃 2SD65
	X_5	〃 〃
	X_6	〃 〃
	X_7	〃 〃
	D	Diode 1T23G
1-201-601-00	Th	Thermistor CS120
1-528-010-00 / 1-528-011-00	Batt.	Battery
1-201-145-00	R_1	Composition Resistor 10 kΩ 1/10 W ± 10%
1-201-201-00	R_2	15 kΩ 〃
1-201-211-00	R_3	75 kΩ 1/10 W ± 5%
1-201-131-00	R_4	330 Ω 1/10 W ± 10%
1-201-106-00	R_5	5.6 kΩ 〃
	R_6	Encapsulated Components 22 kΩ
1-101-403-	R_7	〃 〃 3.3 kΩ
	R_8	〃 〃 330 kΩ
1-101-404	R_9	〃 〃 10 kΩ
	R_{10}	〃 〃 330 Ω
1-221-257-	R_{11}	Potentiometer 5 kΩ
1-201-202-00	R_{12}	Composition Resistor 56 kΩ 1/10 W ± 10%
1-201-135-00	R_{13}	2.2 kΩ 〃
1-201-166-00	R_{14}	27 kΩ 〃
1-201-188-00	R_{15}	Composition Resistor 100 Ω 1/10 W ± 10%
1-201-189-00	R_{16}	〃 2.7 kΩ 〃
1-201-158-00	R_{17}	〃 3.3 kΩ 〃
1-201-186-00	R_{18}	〃 33 Ω 〃
1-201-135-00	R_{19}	〃 2.2 kΩ 〃
1-201-187-00	R_{20}	〃 62 Ω 〃
1-201-185-00	R_{21}	〃 5.1 Ω 〃
1-101-021-	C_3	Capacitor 0.01 μF +80% −20% Ceramic
1-101-020-	C_4	〃 0.005 μF 〃 〃
1-103-047-	C_5	〃 130 pF ±50% Styrol
	C_6	〃 150 pF built in IFT_1
	C_7	〃 150 pF built in IFT_2
	C_8	〃 150 pF built in IFT_3
1-101-045-	C_9	〃 1 pF 0.5 pF Ceramic
1-119-068-04	C_{10}	〃 5 μF +100% −0% 3 V Electrolytic
1-101-022-	C_{11}	〃 0.02 μF +80% −20% Ceramic
1-101-021-	C_{12}	〃 0.01 μF +80% −20% 〃
1-101-403-	C_{13} / C_{14}	0.01 μF (Encapsulated with $R_{6,7,8}$)
1-101-404-	C_{15}	0.01 μF (Encapsulated with $R_{9,10}$)
1-127-901-	C_{16}	Capacitor 0.3 μF +100% −20% 6 V Alox
1-101-022-	C_{17}	0.02 μF +100% −20% Ceramic
1-119-068-04	C_{18}	5 μF +100% −0% 3 V Electrolytic
1-119-068-04	C_{19}	5 μF +100% −0% 〃
1-125-105-04	C_{20}	50μF × 2 +100% −0% 4.5V Electrolytic Block
1-101-021-	C_{21}	0.01 μF +80% −20% Ceramic

SONY TR-7170

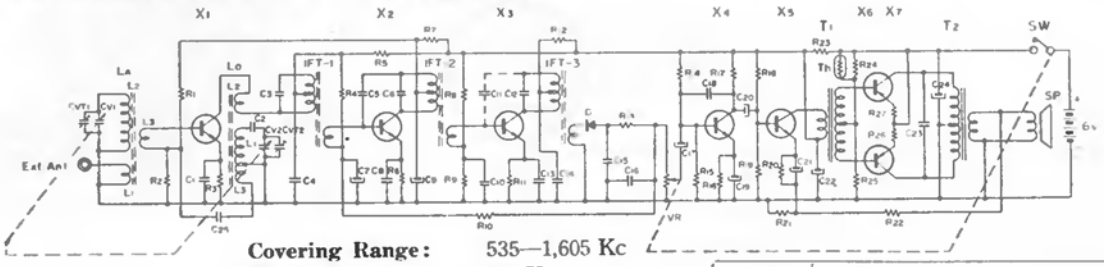

Covering Range: 535—1,605 Kc
IF Frequency: 455 Kc

IFT

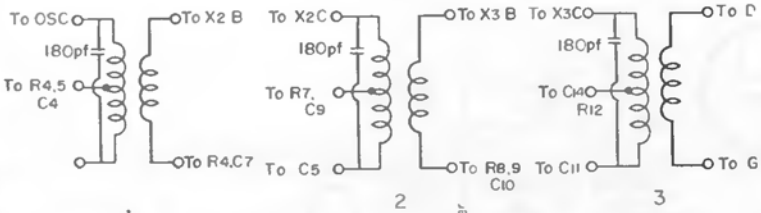

Symbol	Description		
L_A	Ferrite Bar Antenna		
L_O	Oscillator Coil		
IFT-1	IF transformer		
VR	Potentiometer		
X_1	Transistor	2SC 73	
X_2	,,	2SC 76	
X_3	,,	2SC 76	
X_4	,,	2SD 65	
X_5	,,	2SD 65	
X_6	,,	2SB 51	
X_7	,,	2SB 51	
D	Diode	1T 23	
Th	Thermistor	S-90	
R_1	Carbon Resistor	12 KΩ	1/2 W ± 10%
R_2	,,	150 KΩ	,, ,,
R_3	,,	8.2 KΩ	,, ,,
R_4	,,	47 KΩ	,, ,,
R_5	,,	1.0 KΩ	,, ,,
R_6	,,	470 Ω	,, ,,
R_7	,,	6.8 KΩ	,, ,,
R_8	,,	12 KΩ	,, ,,
R_9	,,	2.2 KΩ	,, ,,
R_{10}	,,	5.6 KΩ	,, ,,
R_{11}	,,	470 Ω	,, ,,
R_{12}	,,	470 Ω	,, ,,
R_{13}	,,	1.0 KΩ	,, ,,
R_{14}	,,	5.6 KΩ	,, ,,
R_{15}	,,	2.2 KΩ	,, ,,
R_{16}	,,	470 Ω	,, ,,
R_{17}	Carbon Registor	1.0 KΩ	,, ,,
R_{18}	,,	5.6 KΩ	,, ,,
R_{19}	,,	3.3 KΩ	,, ,,
R_{20}	,,	220 Ω	,, ,,
R_{21}	,,	10 Ω	,, ,,
R_{22}	,,	100 Ω	,, ,,
R_{23}	,,	220 Ω	,, ,,
R_{24}	,,	100 Ω	,, ,,
R_{25}	,,	2.2 KΩ	,, ,,
R_{26}	,,	3 Ω	,, ,,
R_{27}	,,	3 Ω	,, ,,
C_1	Capacitor	0.005 μF	Electrolytic
C_2	,,	370 pF	Styrol
C_3	,,	180 pF	built in IFT
C_4	,,	0.05 μF	Electrolytic
C_5	,,	2 pF	Styrol
C_6	,,	180 pF	built in IFT
C_7	,,	10 μF 6 V	Electrolytic
C_8	,,	0.05 μF	,,
C_9	,,	10 μF	,,
C_{10}	,,	0.05 μF	,,
C_{11}	—deleted—		
C_{12}	Capacitor	180 pF	built in IFT
C_{13}	,,	0.05 μF	Electrolytic
C_{14}	,,	0.05 μF	,,
C_{15}	,,	0.02 μF	,,
C_{16}	,,	0.01 μF	,,
C_{17}	,,	10 μF 6 V	,,
C_{18}	,,	0.005 μF	,,
C_{19}	,,	30 μF 3 V	,,
C_{20}	,,	10 μF 6 V	,,
C_{21}	,,	30 μF 3 V	,,
C_{22}	,,	100 μF 6 V	,,
C_{23}	,,	0.3 μF (0.25)	,,
C_{24}	,,	100 μF 6 V	,,
C_{25}	,,	0.01 μF	,,

Mounting Diagram (Printed Side)

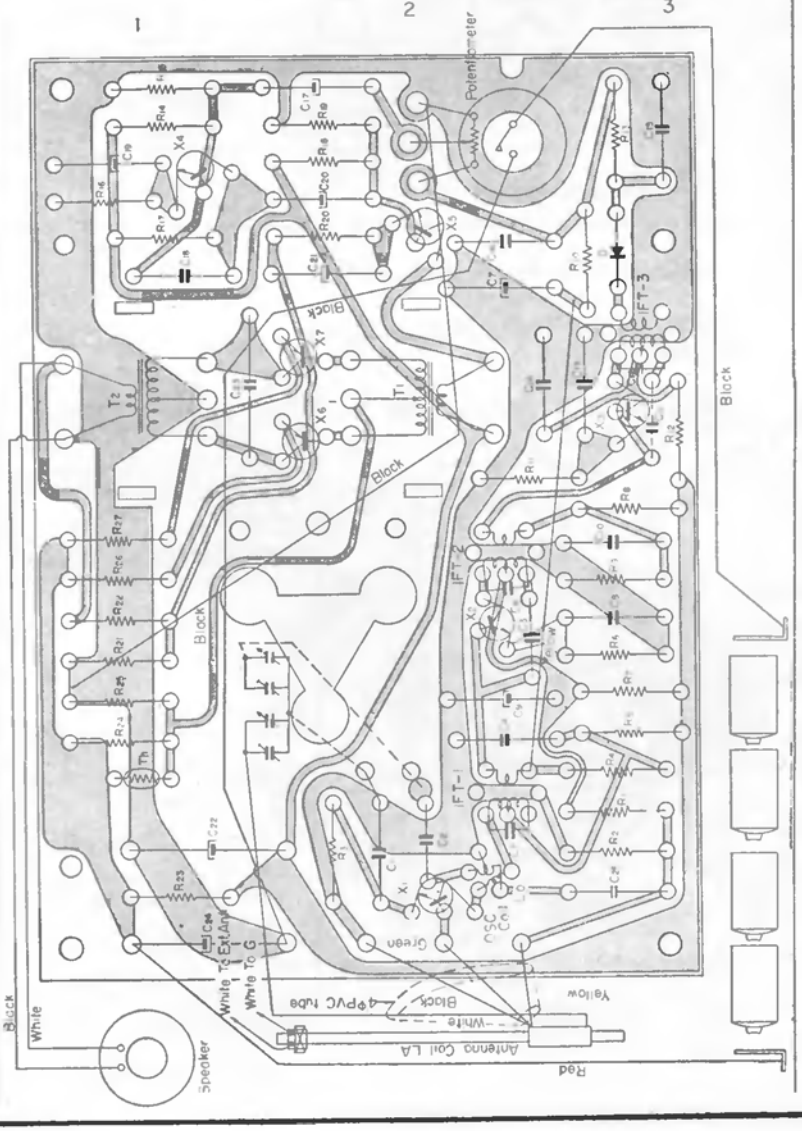

SYLVANIA

Chassis 405-1, Model 45P20

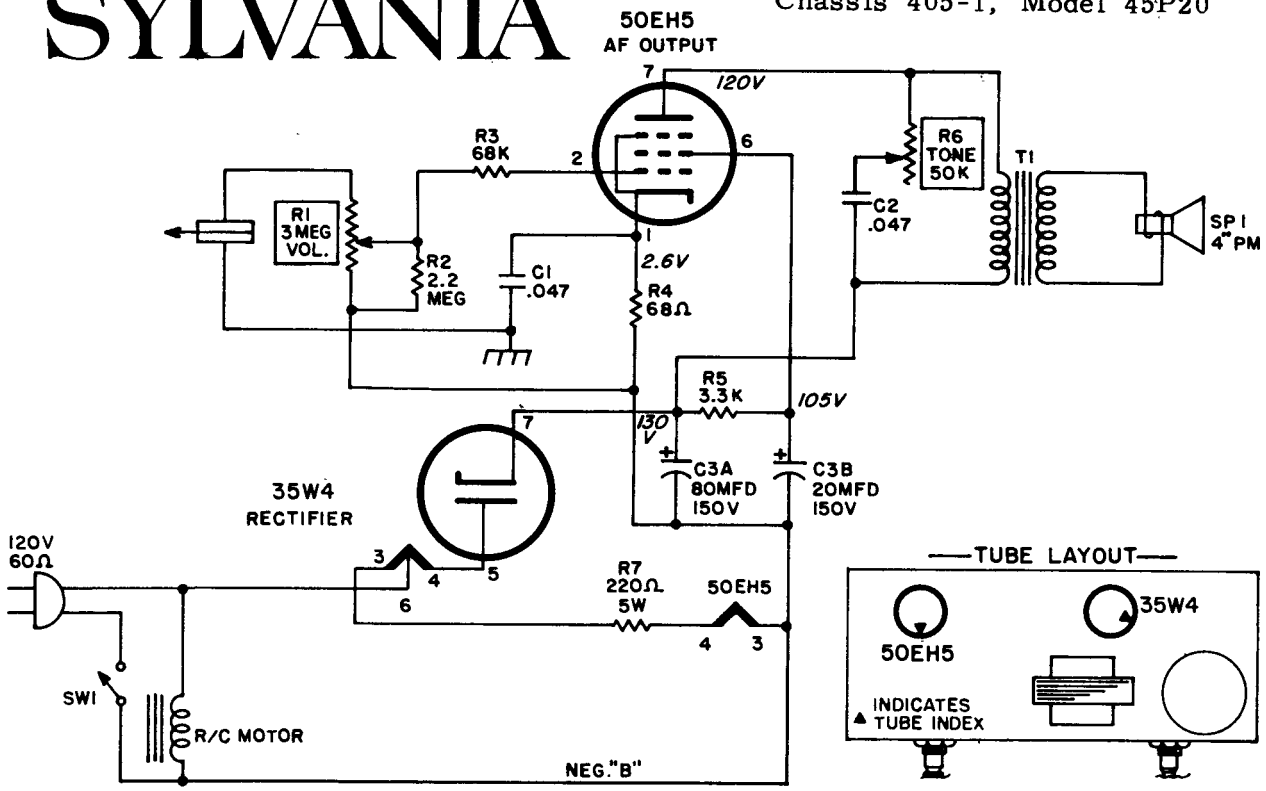

SYLVANIA Chassis 406-1, Model 45P32

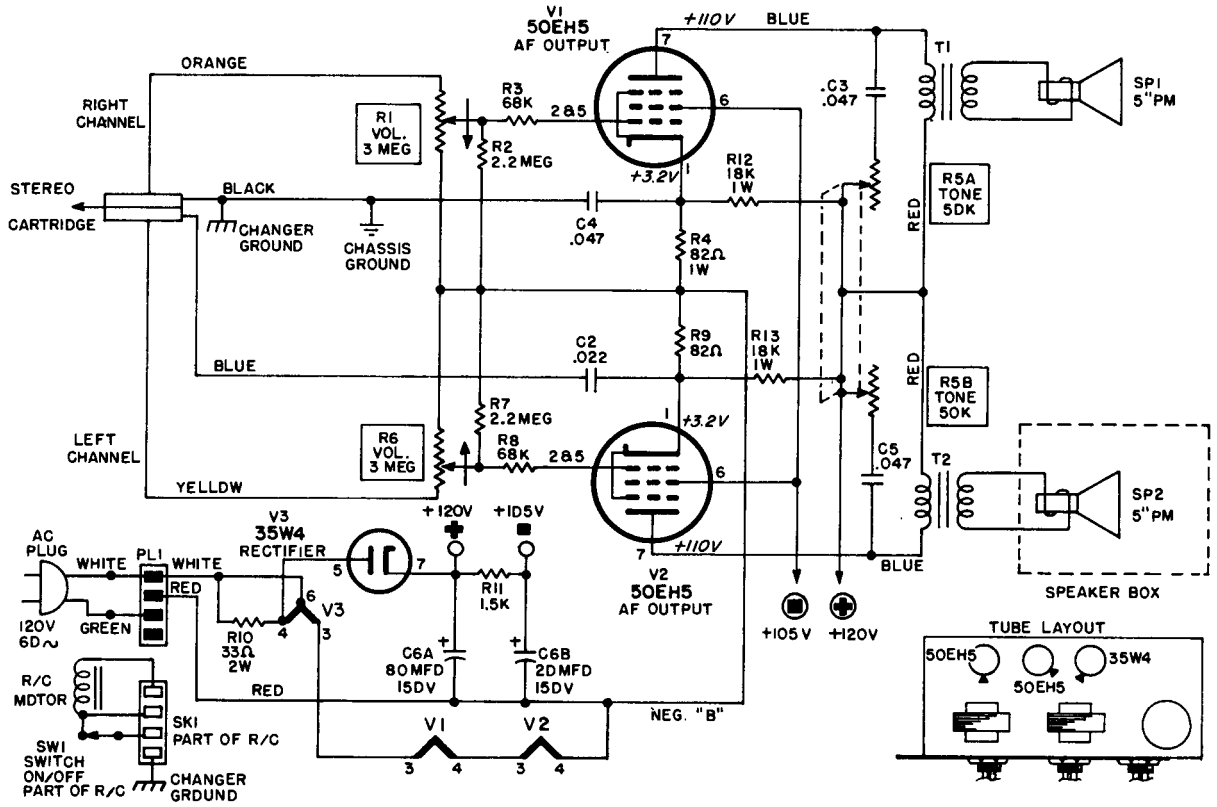

SYLVANIA Chassis 702-2, Models SC26 Series

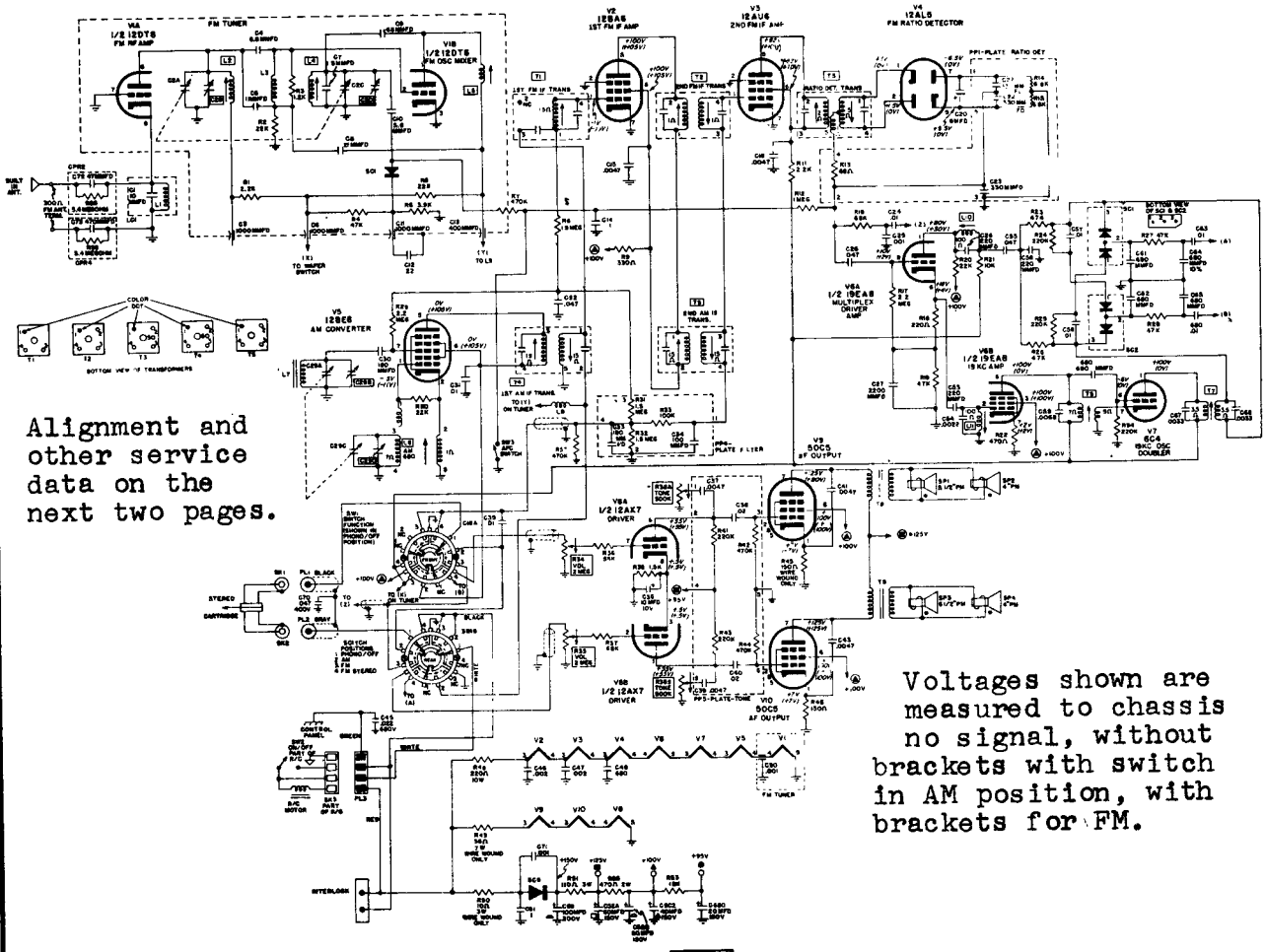

Alignment and other service data on the next two pages.

Voltages shown are measured to chassis no signal, without brackets with switch in AM position, with brackets for FM.

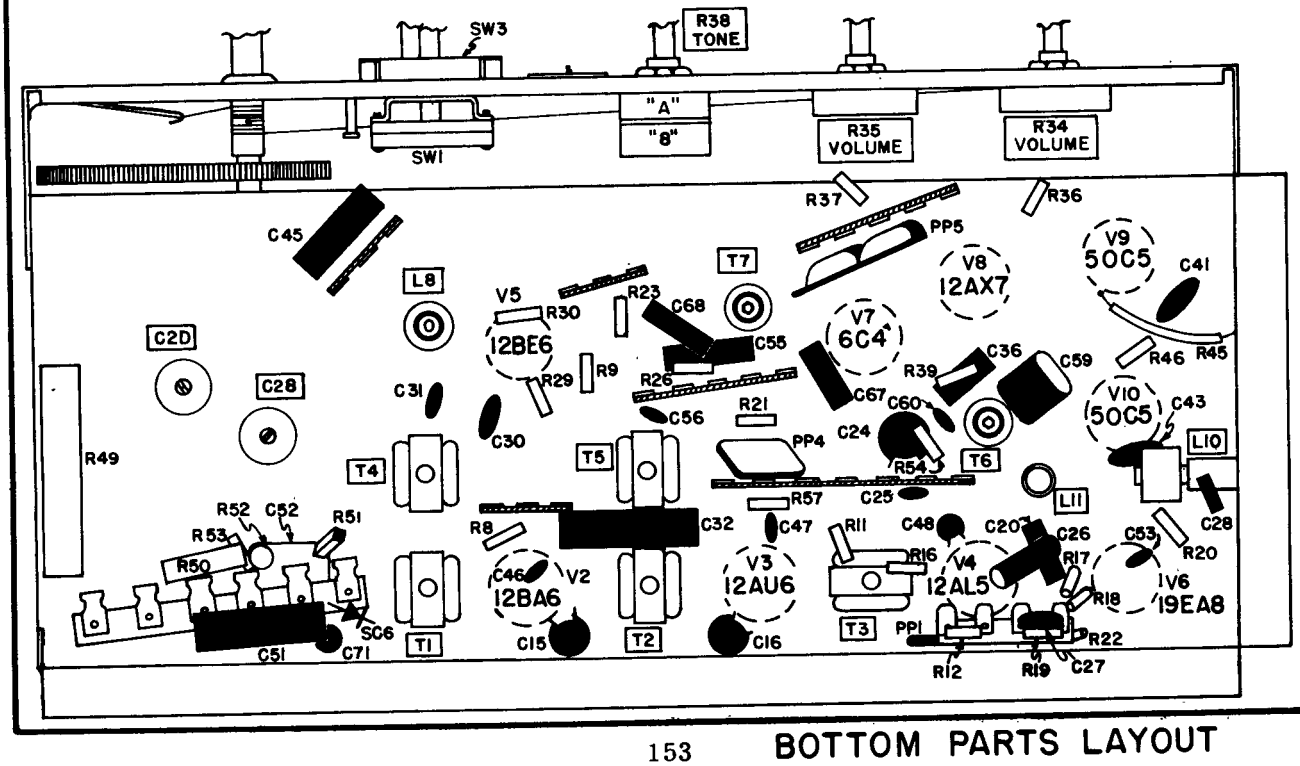

BOTTOM PARTS LAYOUT

SYLVANIA Chassis 702-2, Models SC26 Series, Alignment Information,Continued

(Alignment continued on the next page, other data preceding and following)

AM ALIGNMENT

(Selector switch in AM position)

STEP	TUNING CAPACITOR SETTING	TEST EQUIPMENT HOOK-UP	GENERATOR FREQUENCY	ADJUSTMENT POINT	ADJUST FOR
1	Fully Open	SIGNAL GENERATOR - "Hot" lead thru a .1 Mfd Capacitor to test point (A). Ground lead to chassis. AC VOLTMETER - Across Speaker terminals of channel set at maximum volume.	455 KC	T5 Bottom T5 Top T4 Bottom T4 Top	Maximum Meter Reading
2	Fully Open	Same as Step 1	1620 KC	C29D AM Osc. Trimmer	Maximum Meter Reading
3	1400	SIGNAL GENERATOR - Radiate signal to receiver through a loop consisting of several turns of wire. AC VOLTMETER - Same as Step 1.	Set generator to a frequency corresponding to receiver dial (until signal is heard through receiver speaker.)	C29B AM Ant. Trimmer	Maximum Meter Reading

FM ALIGNMENT

(Selector switch in FM position)

STEP	TUNING CAPACITOR SETTING	TEST EQUIPMENT HOOK-UP	GENERATOR FREQUENCY	ADJUSTMENT POINT	ADJUST FOR
1	Point of non-interference	SIGNAL GENERATOR - "Hot" lead through a .005 Mfd capacitor to test point (B). Ground lead to chassis. AC VOLTMETER - "Hot" lead to test point (C). Ground lead to chassis.	10.7 MC	T3 Bottom T2 Bottom T2 Top T1 Top L5	Maximum Meter Reading
2	Same as Step 1	SIGNAL GENERATOR - Same as Step 1. AC VOLTMETER - "Hot" lead to test point (D). Ground lead connected to chassis.	10.7 MC	T3 Top	Zero Meter Reading
3	108	SIGNAL GENERATOR - Same as Step 1. AC VOLTMETER - Same as Step 1.	108 MC	C2D FM Osc. Trimmer	Maximum Meter Reading

FM ALIGNMENT *(Continued)*

4	88	SIGNAL GENERATOR - Same as Step 1. AC VOLTMETER - Same as Step 1.	88 MC	C2B FM Ant. Trimmer	Maximum Meter Reading

MULTIPLEX ALIGNMENT PROCEDURE

Outlined below is an alternate method of FM MULTIPLEX ALIGNMENT using a standard Multiplex Broadcast as the signal source. Whenever FM multiplex alignment equipment is used, follow the procedures specified by the equipment manufacturer. Peaking of the 19KC and 38KC coils is easily accomplished, however correct phase relationship is absolutely essential for maximum channel separation.

(Selector switch in FM multiplex position)

STEP	TEST EQUIPMENT HOOK-UP	SIGNAL USED	ADJUSTMENT POINT	ADJUST FOR
1	OSCILLOSCOPE - Hot lead to pin 6 of 19EA8. Ground lead to chassis.	Multiplex	T6	Max output of the 19 KC pilot carrier
2	OSCILLOSCOPE - Hot lead to pin 1 of 6C4. Ground lead to chassis	Multiplex	T7	Max output of the 38 KC signal
3	Remove test equipment			
4	Very carefully readjust T6 and T7 for maximum separation of sound. NOTE: Some multiplex stations transmit announcements on one channel only. Adjust T6 or T7 for minimum output on opposite channel being transmitted.			

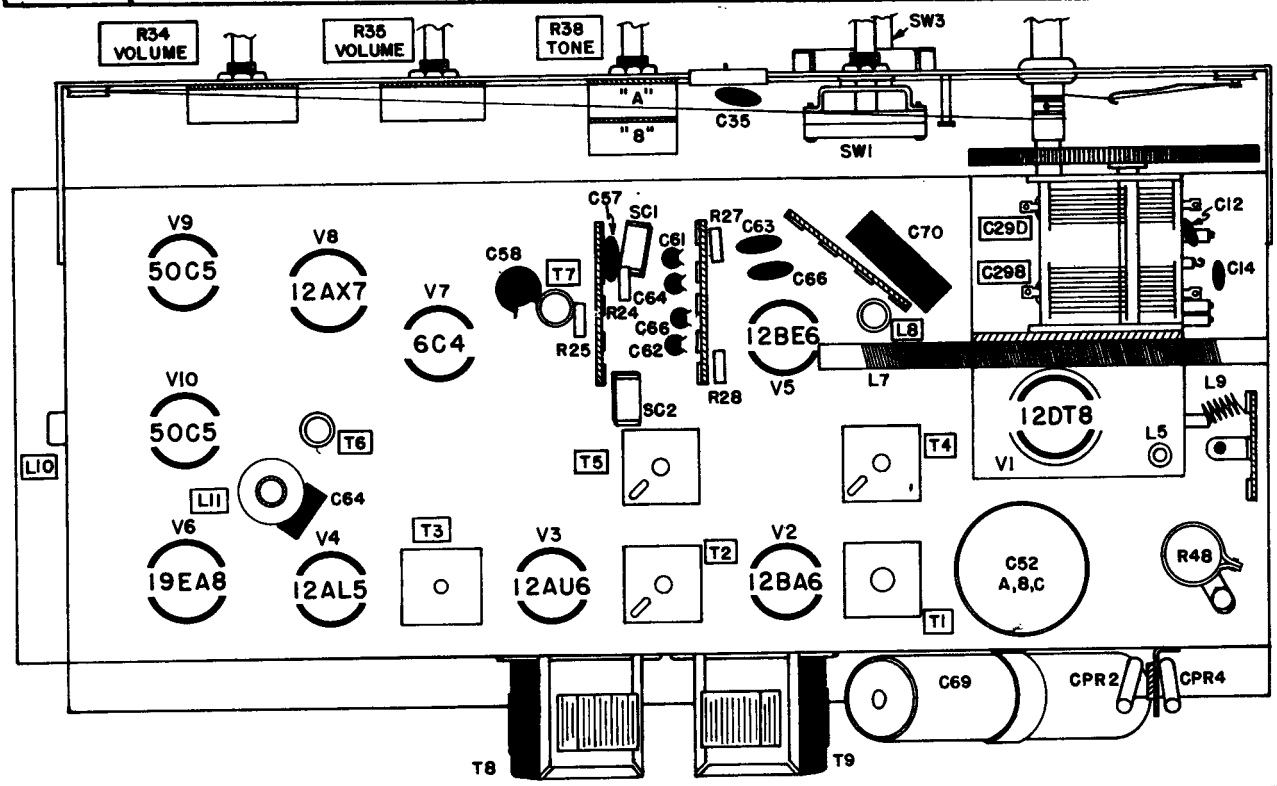

SYLVANIA Chassis 407-1, Models 45P34, 45P35 Series

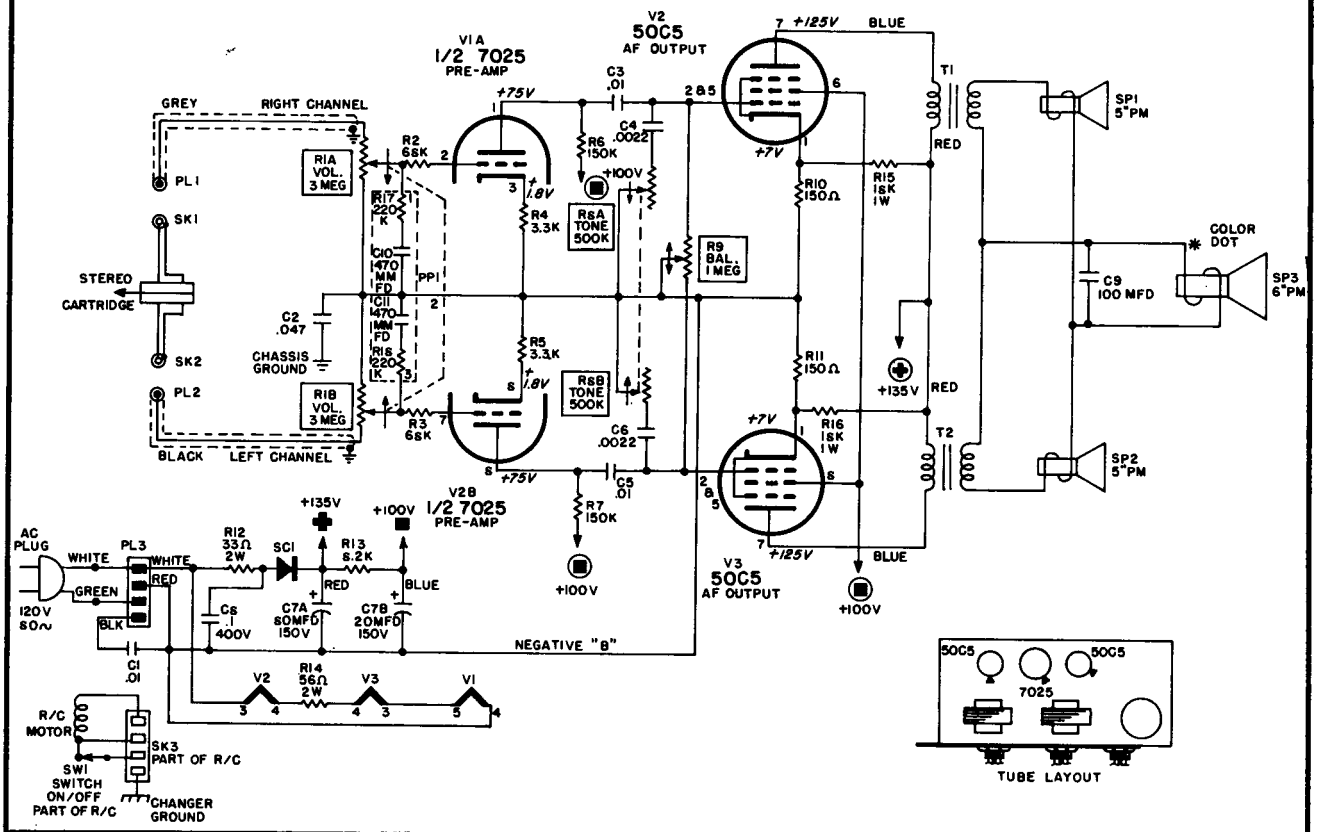

SYLVANIA Chassis 702-2, Models of SC26 Series, Service data continued

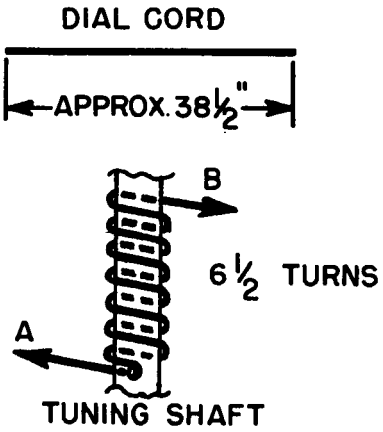

CHASSIS REMOVAL

1. Remove screws securing backcover. Remove backcover.
2. Identify and disconnect leads to speakers and record changer.
3. Remove two (2) screws securing interlock to cabinet.
4. Remove screws securing antenna terminal board to cabinet.
5. Remove knobs by pulling straight up.
6. While supporting chassis remove the five (5) screws and two (2) nuts securing chassis to cabinet.
7. To replace chassis reverse the above procedure.

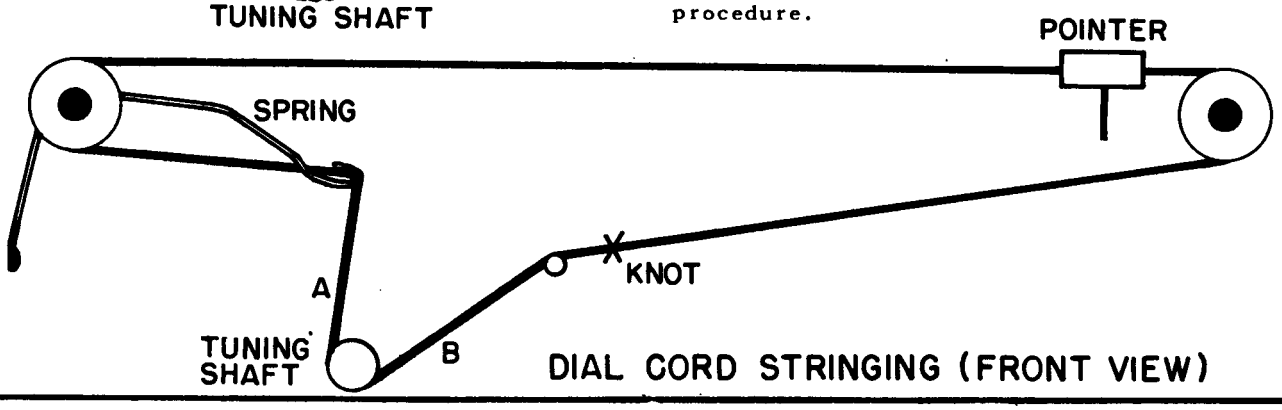

DIAL CORD STRINGING (FRONT VIEW)

Toshiba

MODELS 7TP-30, 7TP-403Y

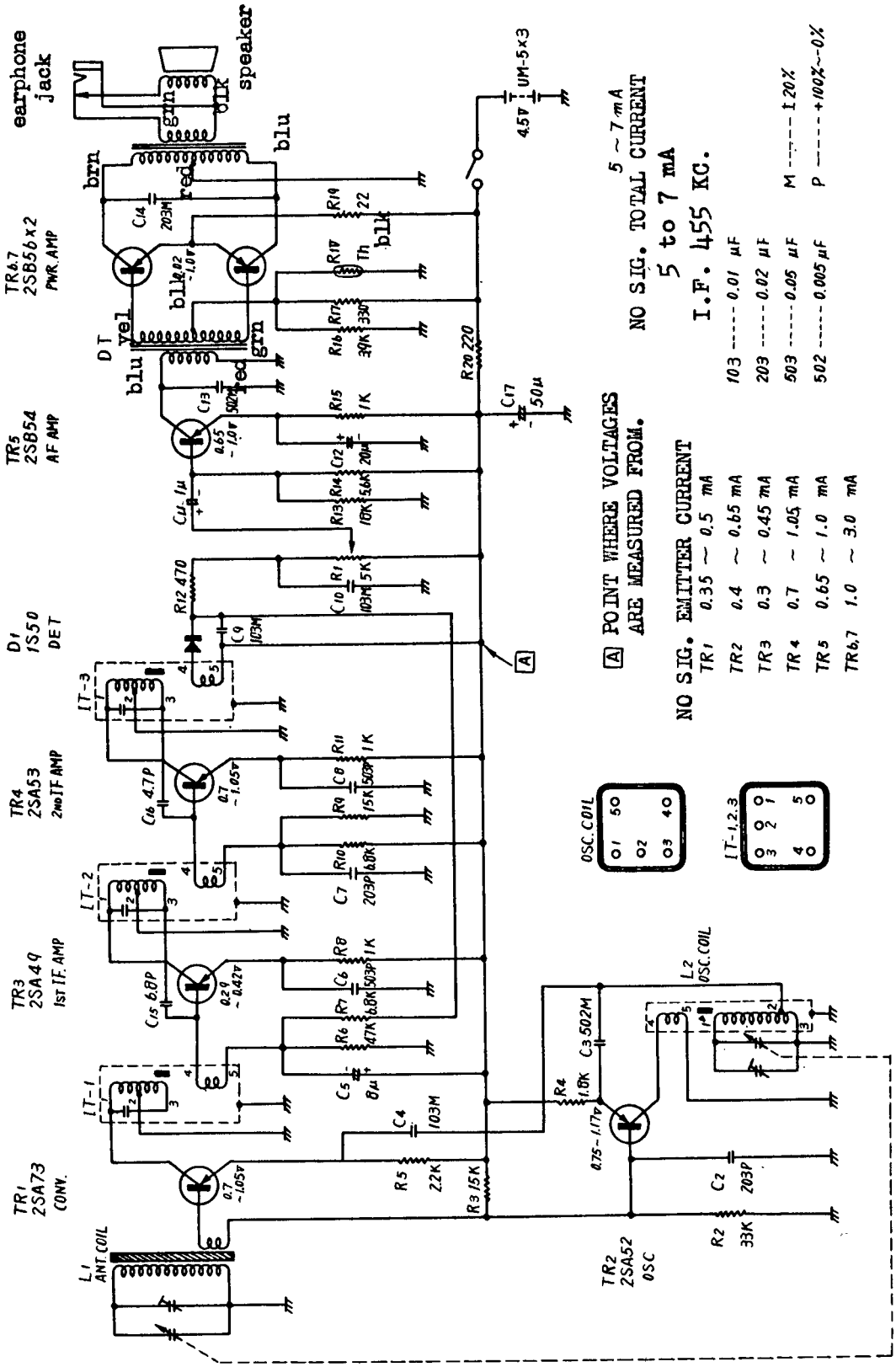

TOSHIBA Models 7TP-30, 7TP-403Y

WEBCOR DIAGRAM FOR MODEL 1354

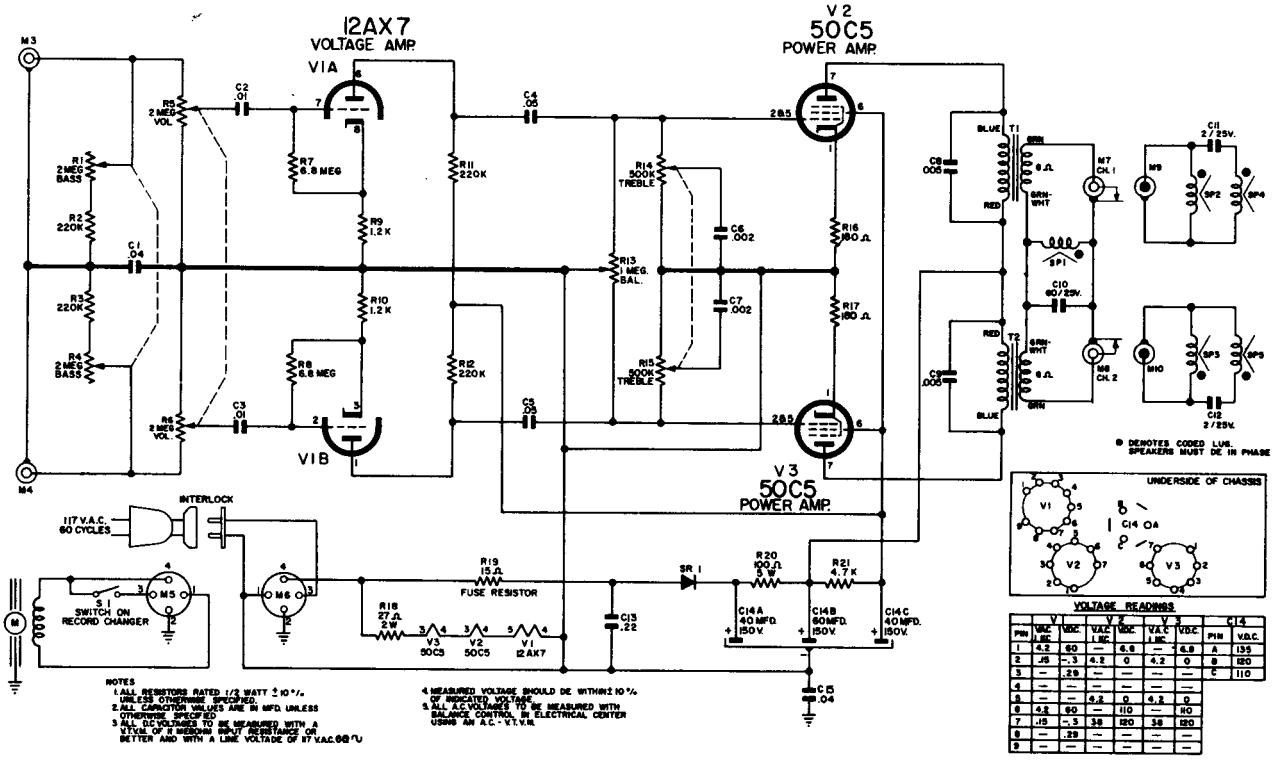

WEBCOR MODEL 1153

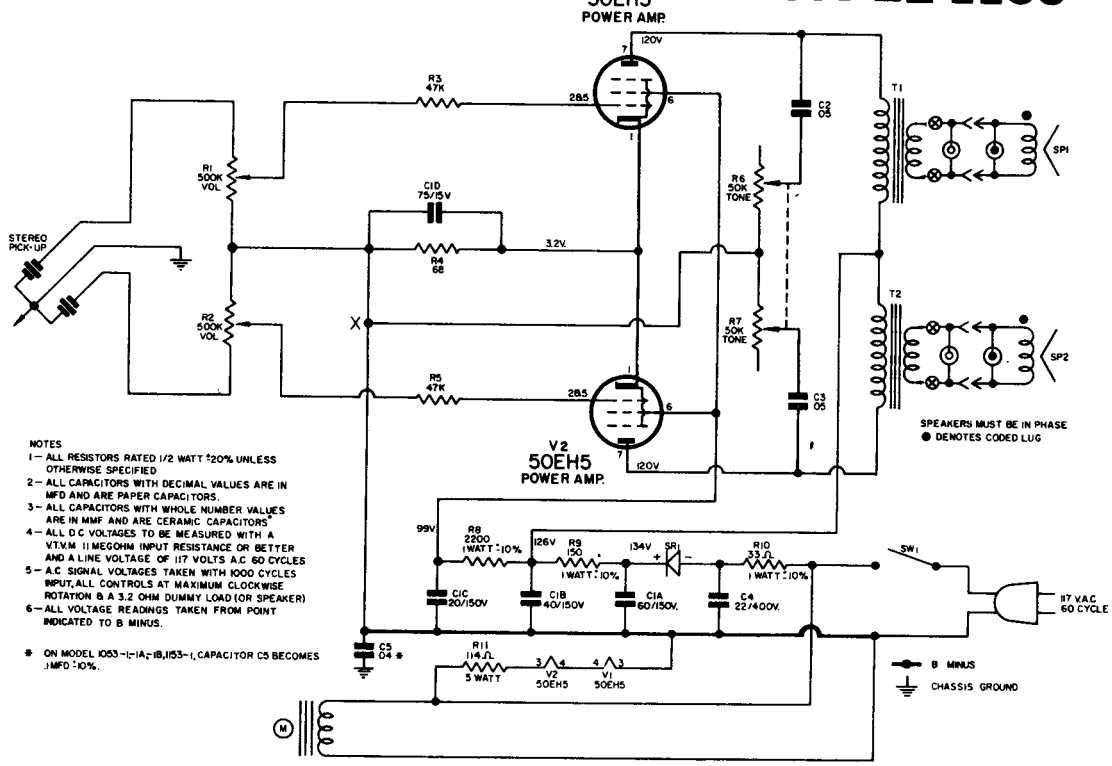

WEBCOR MODEL 1353 AND 1356

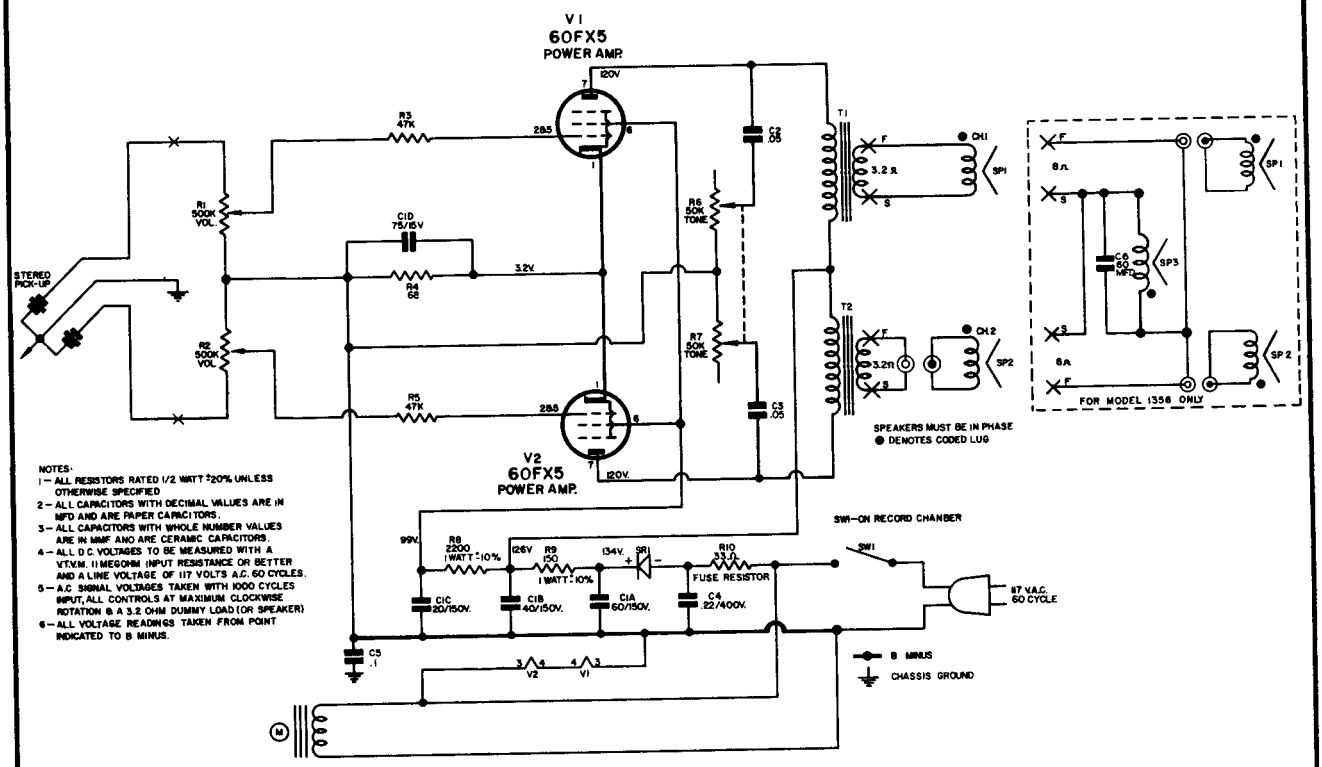

WEBCOR MODEL 1450

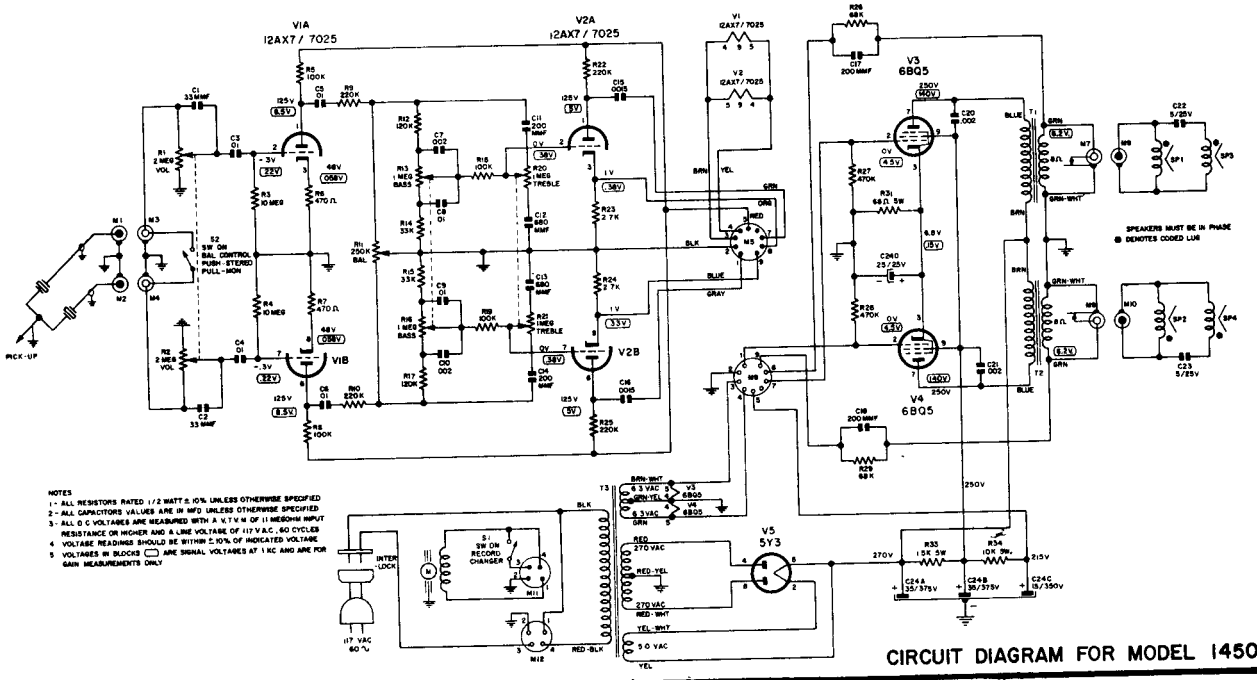

CIRCUIT DIAGRAM FOR MODEL 1450

Westinghouse

MODELS
H-846P8GP
H-846P8GPM

CHASSIS
V-2426-3
V-2426-3M

Frequency Range ..... 540 to 1600 KC
Intermediate Frequency ..... 455 KC

NOTES:
1. DURING SERVICING, BATTERY DRAIN SHOULD BE METERED, WITH NO SIGNAL & VOL. CONT. AT MINIMUM, CURRENT DRAIN AT POINT SHOWN SHOULD BE 14 MA APPROX.
2. MEASUREMENTS MADE WITH A 11 MEG. FROM POINTS INDICATED TO GROUND WITH TUNING CAPACITOR AT MAX., VOLUME CONTROL AT MIN. (NO SIGNAL INPUT) BATTERY SOURCE AT 6 VOLTS.
3. ALL CAPACITANCE VALUES LESS THAN 1 ARE IN MF & VALUES GREATER THAN 1 ARE IN PF, ALL RESISTANCE VALUES ARE IN OHMS ½ WATT UNLESS OTHERWISE INDICATED.

✳ C14 5MF, 12V IN EARLY PRODUCTION.
.5MF, 10V IN LATE PRODUCTION.

TRANSISTOR COMPLEMENT				
	FUNCTION	TYPE	PART NO.	TRANS. NO.	ALT TYPE NO.
TR 1	OSC	PNP	291V03H02	L1, 364	291V03H01
TR 2	MIXER	PNP	291V03H01	L1, 363	291V03H06
TR 3	1ST I.F. AMP	PNP	291V03H02	L1, 364	291V03H01
TR 4	2ND I.F. AMP	PNP	291V03H02	L1, 364	291V03H01
TR 5	AUDIO AMP	PNP	291V04H05		
TR 6	AUDIO DRIVER	PNP	291V04H15		
TR 7	AUDIO OUTPUT ▲	PNP	291V05H04		
TR 8	MATCHED PAIR ▲	PNP	291V05H04		

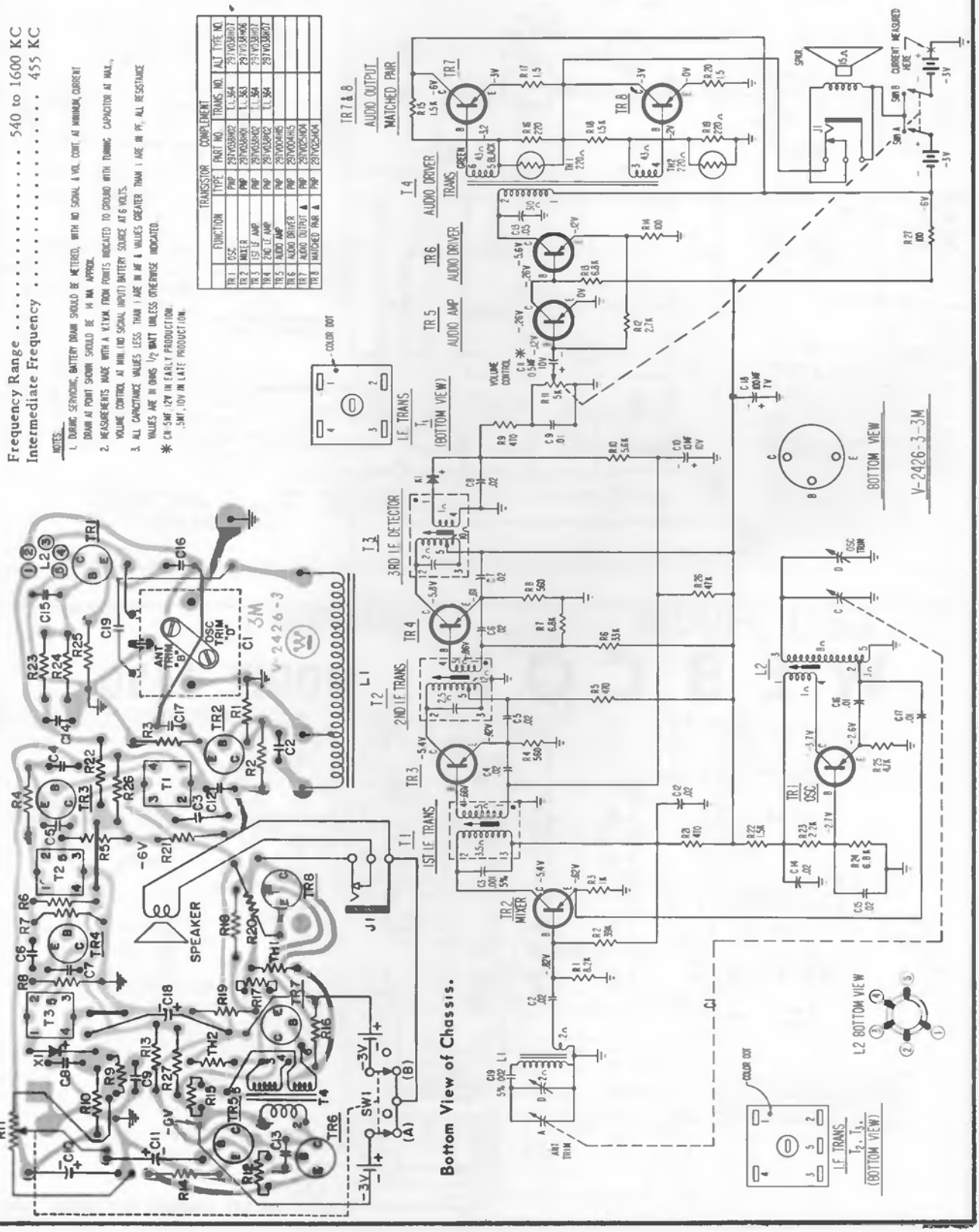

Bottom View of Chassis.

Westinghouse

MODELS H-848N5 H-849N5

(beige/oxford white) (blue/oxford white)

CHASSIS V-2427-1

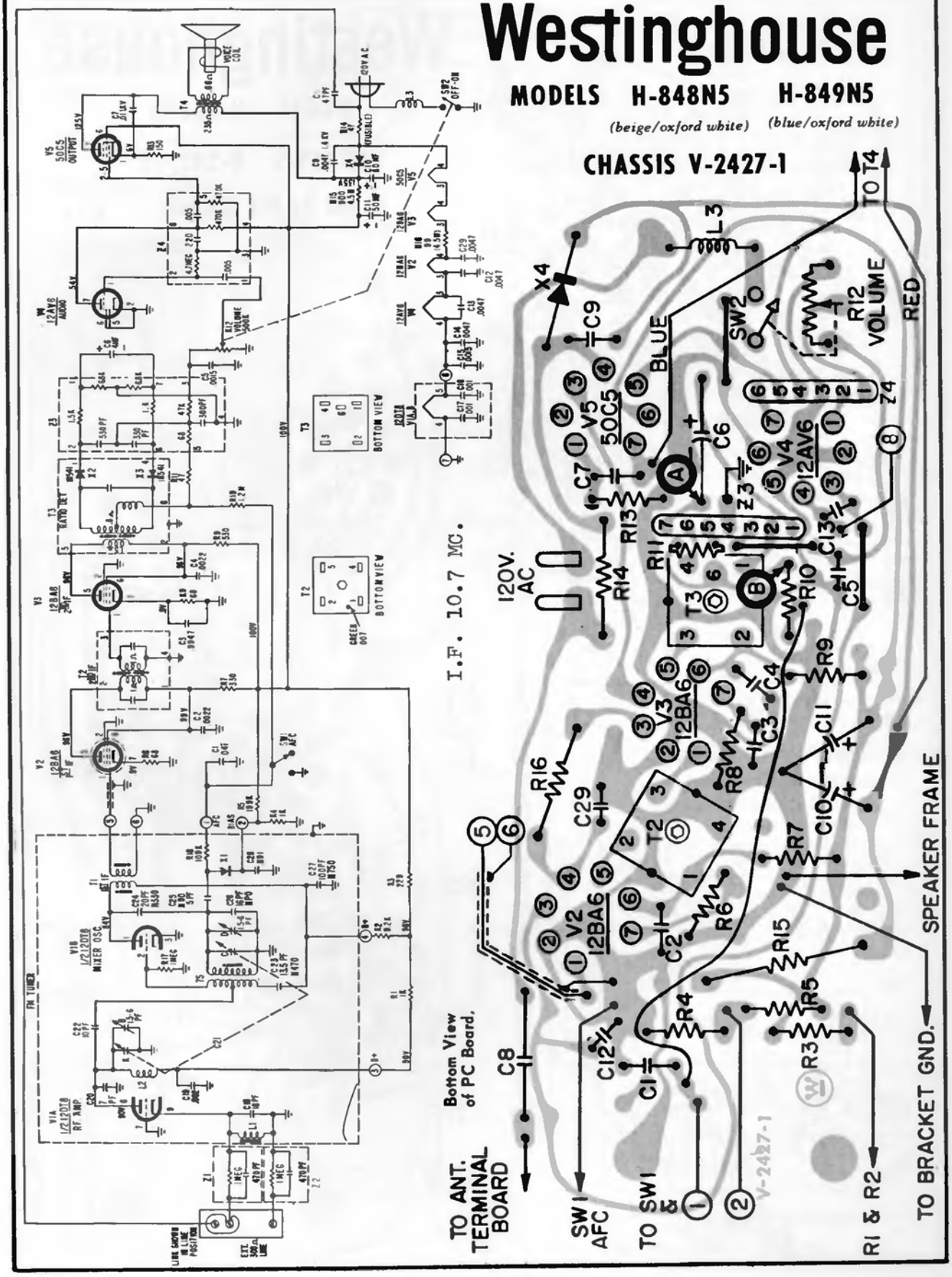

Westinghouse

MODEL H-839N5

CHASSIS V-2427-2

FM TABLE RADIO

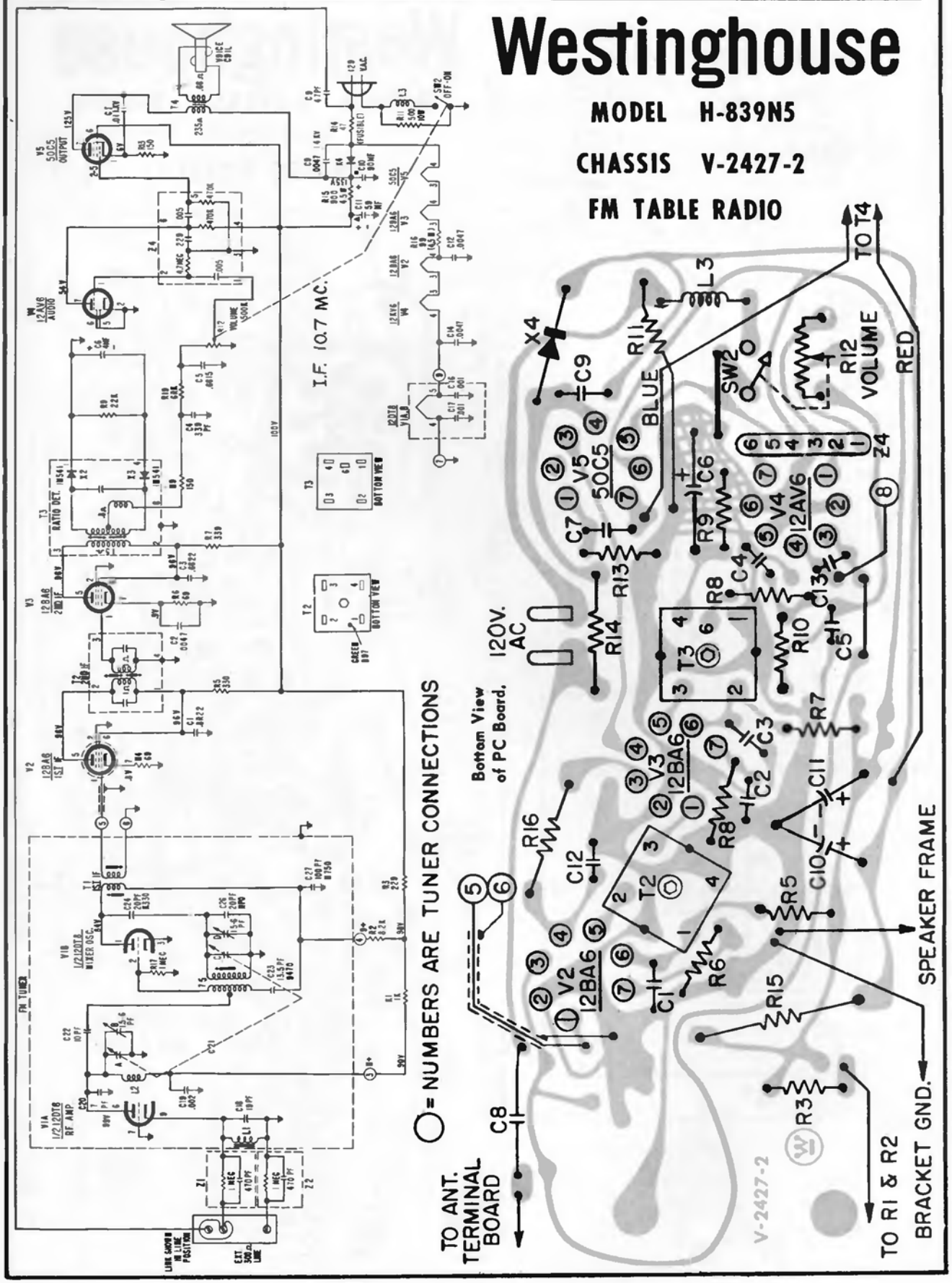

WESTINGHOUSE ELECTRIC

MODELS

ED-1 *(Blonde)*

ED-2 *(Brunette)*

TALKING DOLL

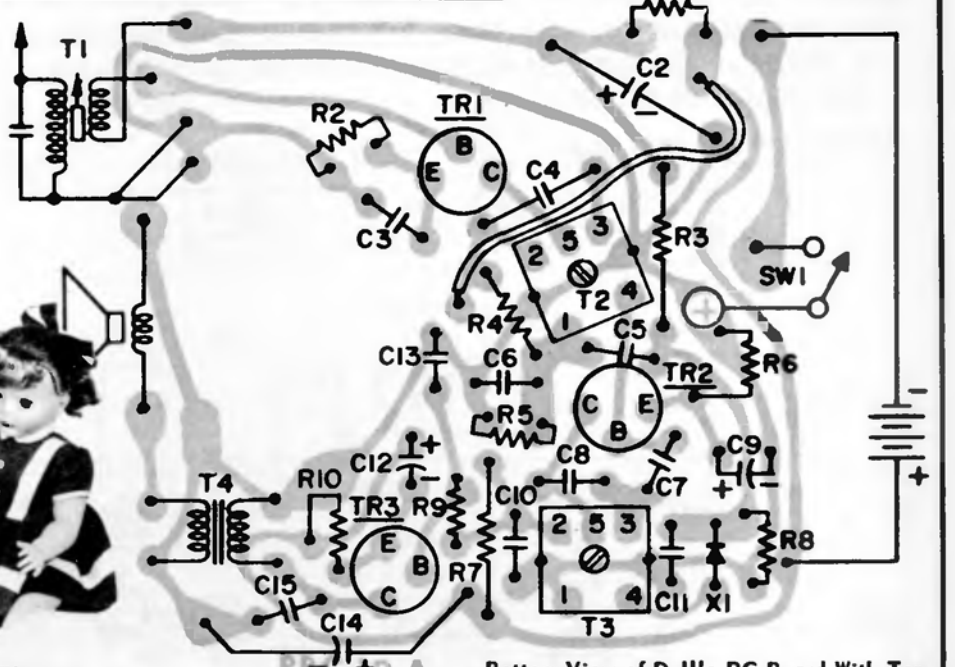

Bottom View of Doll's PC Board With Top Components Shown in Solid Outline.

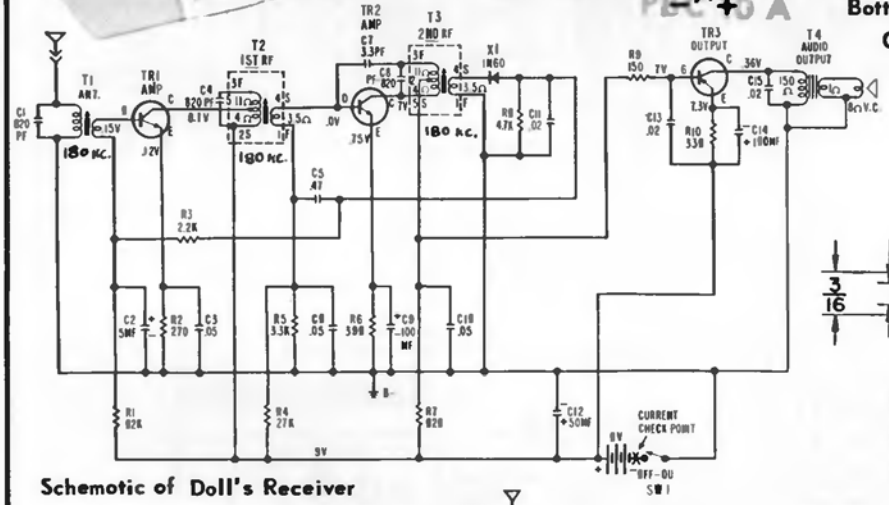

Schematic of Doll's Receiver

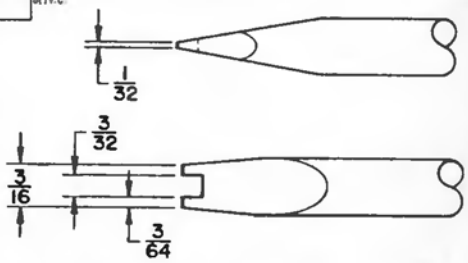

Speciol tool used for Motorboord Screw Removal. Should be made from o 3/16" screwdriver.

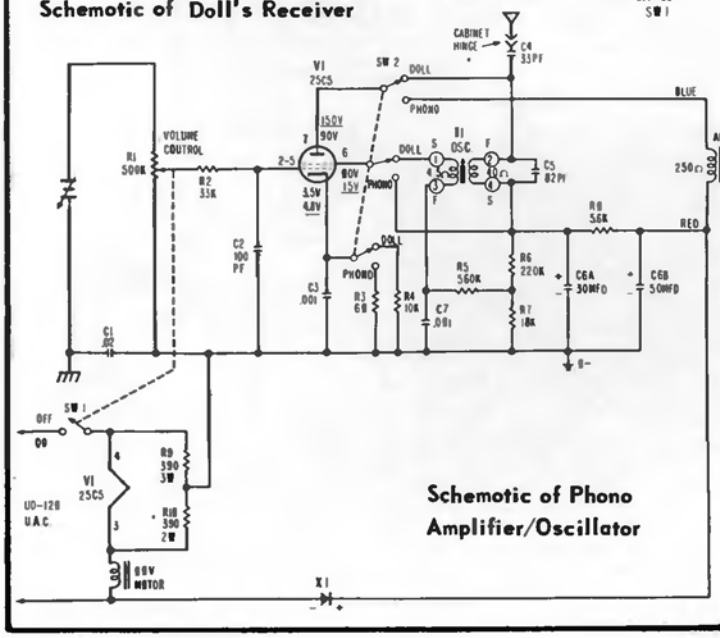

Schematic of Phono Amplifier/Oscillator

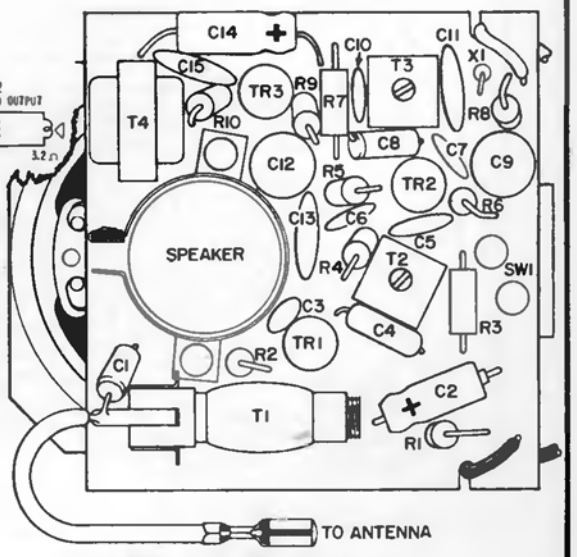

Top View of Doll's PC Board.

WESTINGHOUSE Chassis V-2428-3 and -4, used in Models H-850N6, H-851N6, H-852N6, H-855LN6, H-856LN6, H-871N6, H-872N6, H-873N6, H-875LN6, H-876LN6, H-877LN6.

(Continued on next page)

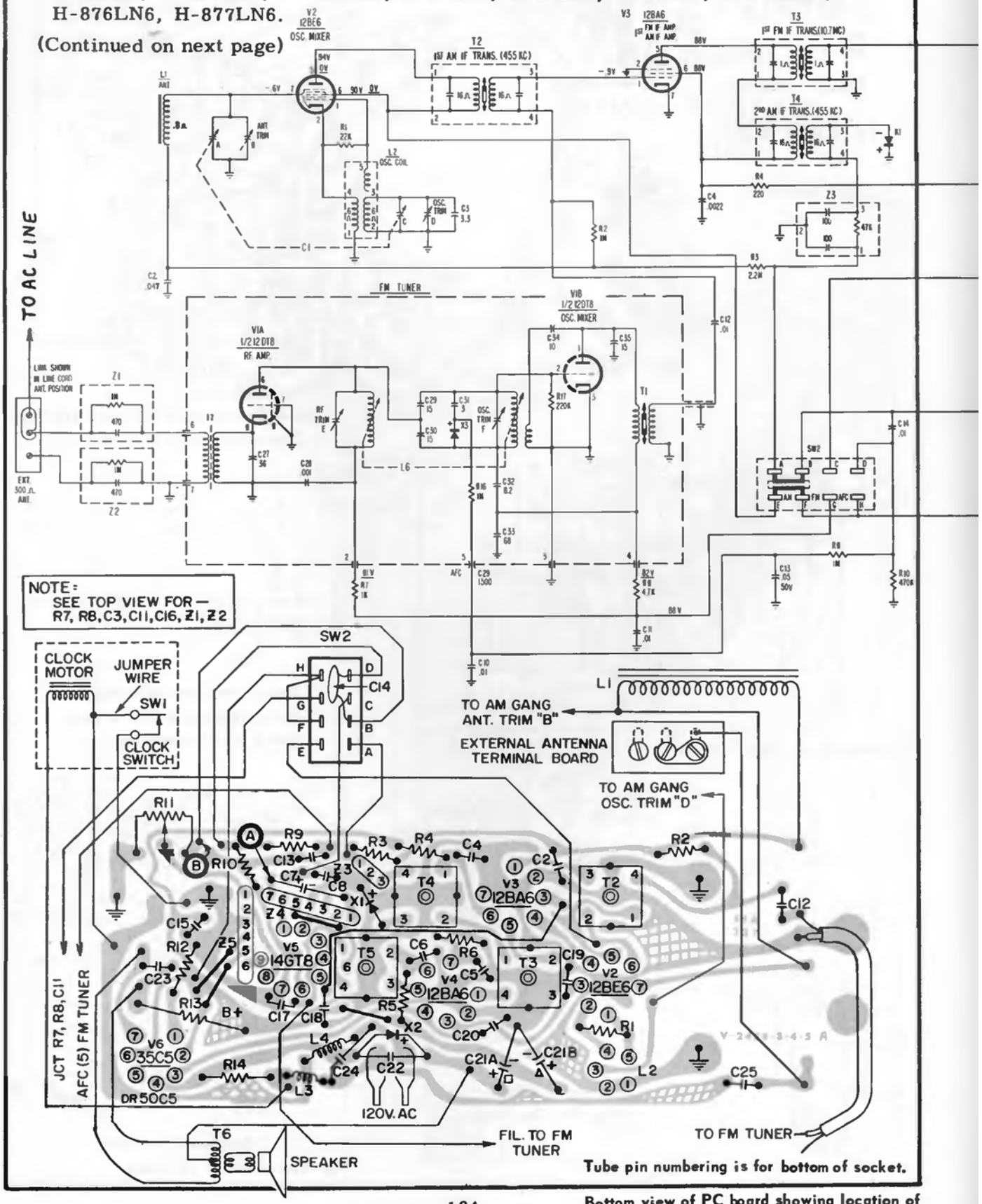

Tube pin numbering is for bottom of socket.

Bottom view of PC board showing location of top components in solid outlines.

WESTINGHOUSE Chassis V-2428-3 and -4, used in Models H-850N6, H-851N6, H-852N6, H-855LN6, H-856LN6, H-871N6, H-872N6, H-873N6, H-875LN6, H-876LN6, H-877LN6.

(Continued from preceding page, at right)

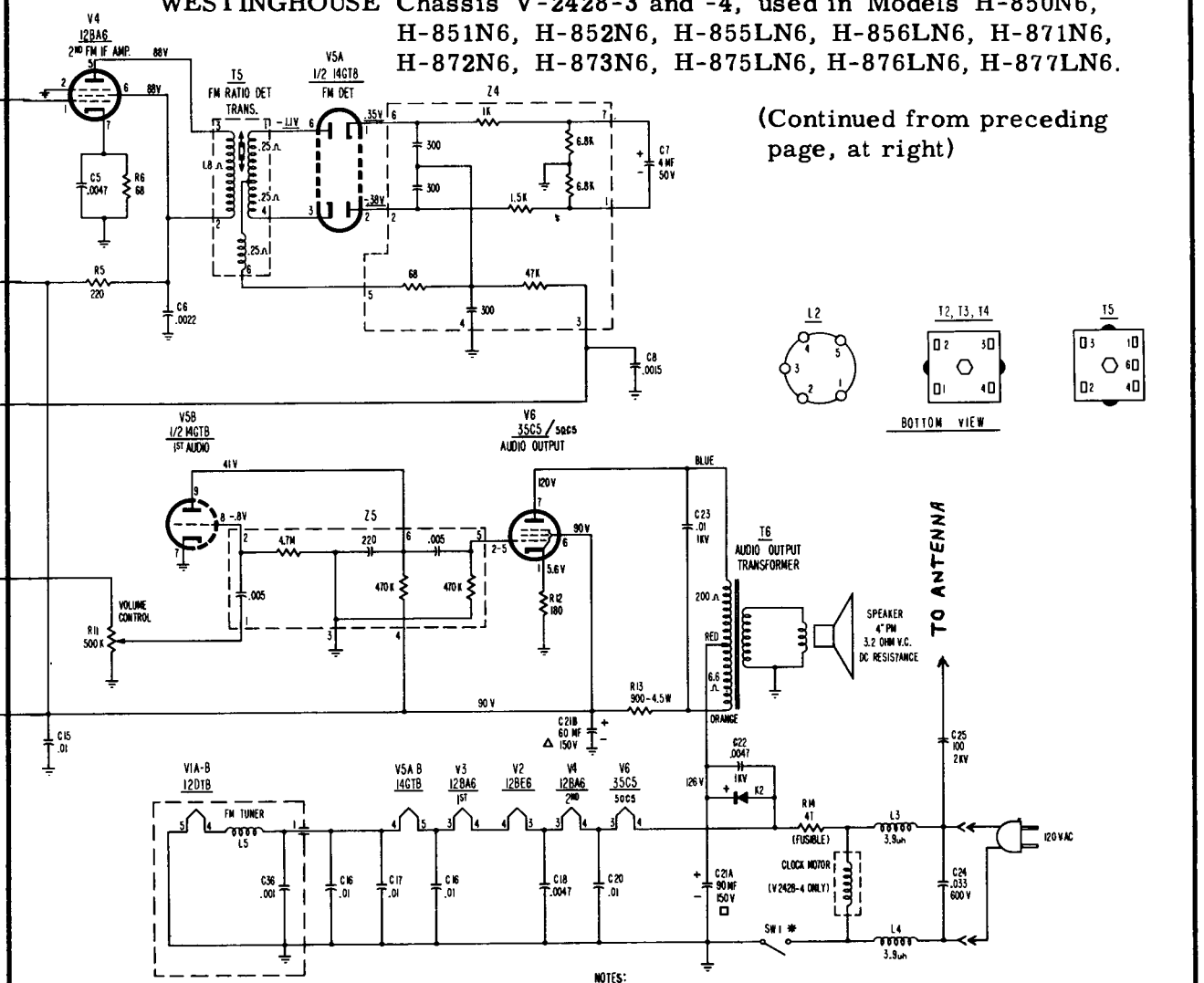

NOTES:

1. ALL CAPACITANCE VALUES LESS THAN 1(ONE) ARE IN MF AND VALUES GREATER THAN 1(ONE) ARE IN PF (PICOFARAD). ALL RESISTANCE VALUES ARE IN OHMS 1/2 WATT UNLESS OTHERWISE INDICATED.
2. VOLTAGES TAKEN WITH A VTVM FROM POINTS INDICATED TO B-, TUNING CAPACITOR AT MAXIMUM, VOLUME CONTROL AT MINIMUM, LINE VOLTARE AT 120 V. AC NO SIGNAL INPUT. SW2 IN AM POSITION UNDERLINED VOLTAGES SW2 IN FM POSITION.

* SW1 IS PART OF VOLUME CONTROL CHASSIS V 2428-3
SW1 IS PART OF CLOCK CHASSIS V 2428-4

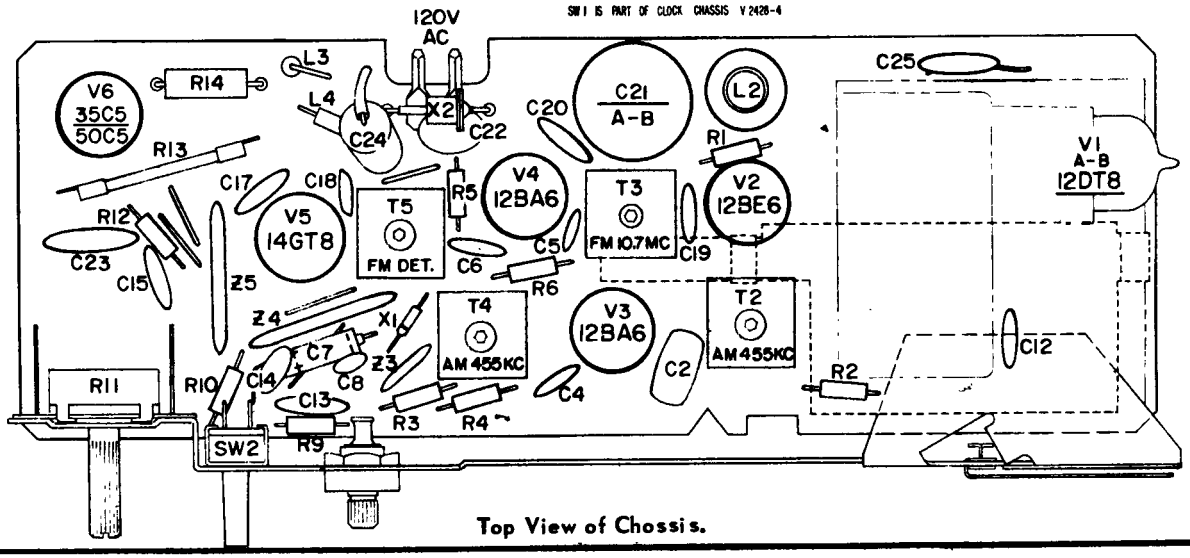

Top View of Chassis.

Westinghouse

CHASSIS V-2450-1
MODELS H-880T5, H-881T5

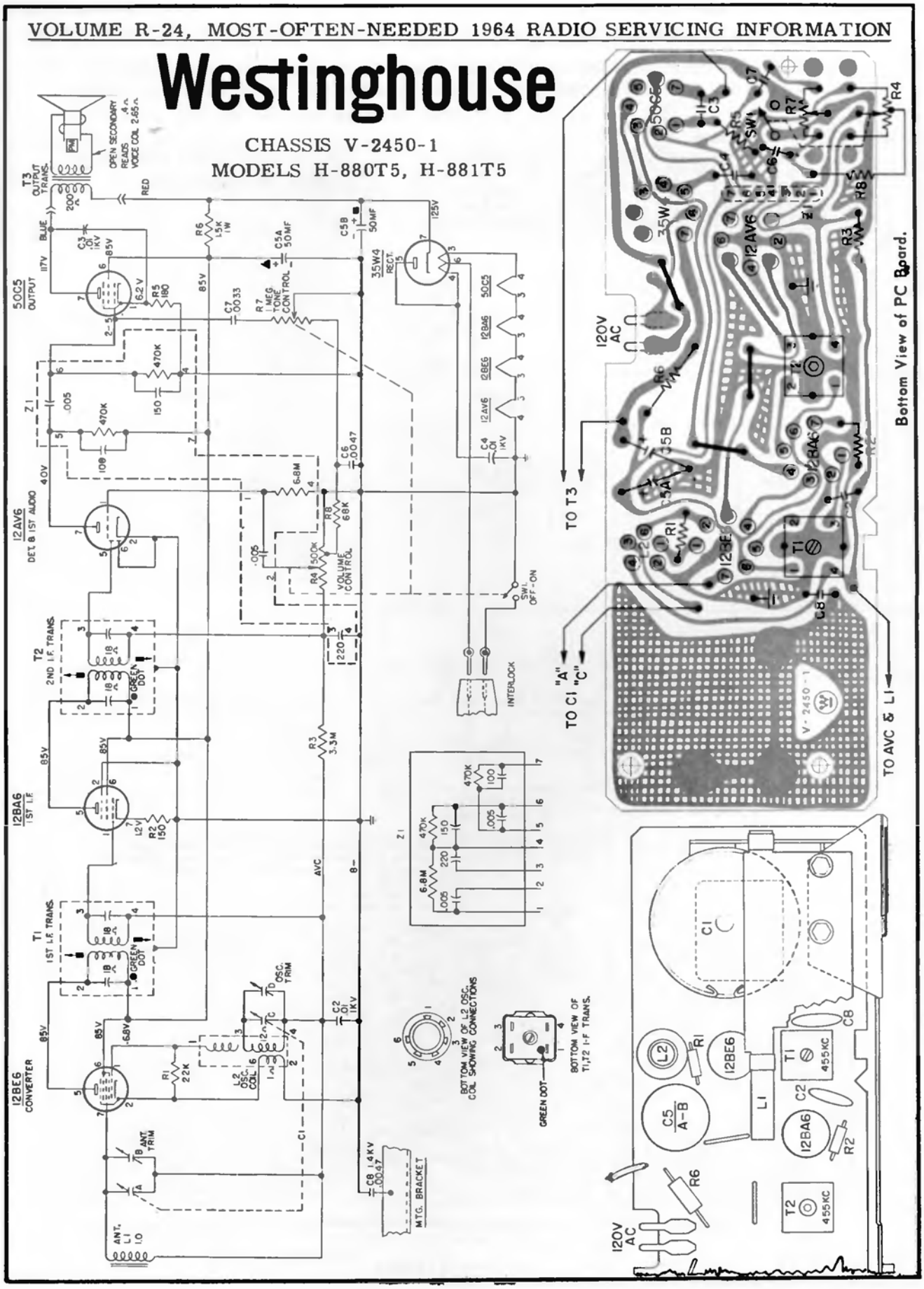

WESTINGHOUSE Chassis V-2507-7, Model H-69ACS1A

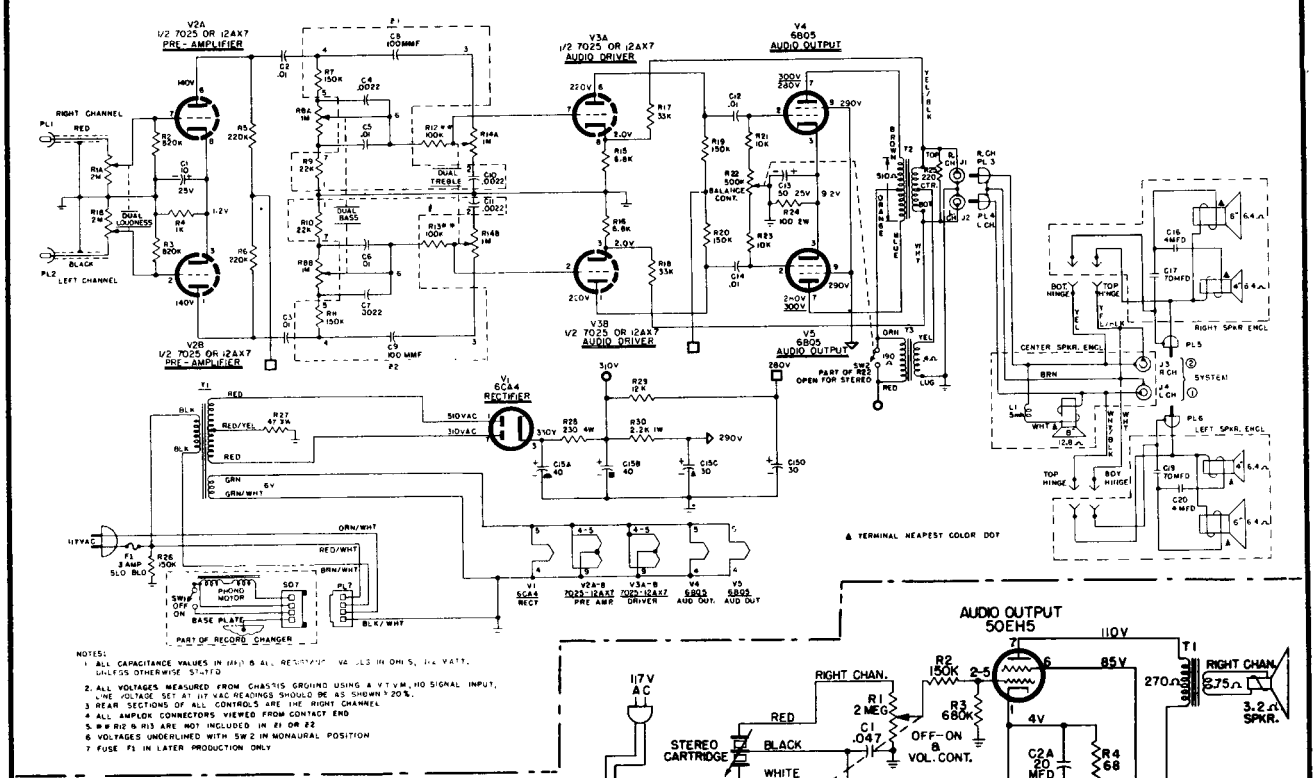

NOTES:
1. ALL CAPACITANCE VALUES IN MFD & ALL RESISTANCE VALUES IN OHMS, 1/2 WATT, UNLESS OTHERWISE STATED
2. ALL VOLTAGES MEASURED FROM CHASSIS GROUND USING A V.T.V.M. NO SIGNAL INPUT, LINE VOLTAGE SET AT 117 VAC READINGS SHOULD BE AS SHOWN ±20%.
3. REAR SECTIONS OF ALL CONTROLS ARE THE RIGHT CHANNEL
4. ALL AMPLOK CONNECTORS VIEWED FROM CONTACT END
5. ⊕ & R13 ARE NOT INCLUDED IN Z1 OR Z2
6. VOLTAGES UNDERLINED WITH SW 2 IN MONAURAL POSITION
7. FUSE F1 IN LATER PRODUCTION ONLY

Models H-62MPS1A, H-62MPS2A, H-62MPS3A, Chassis V-2508-2

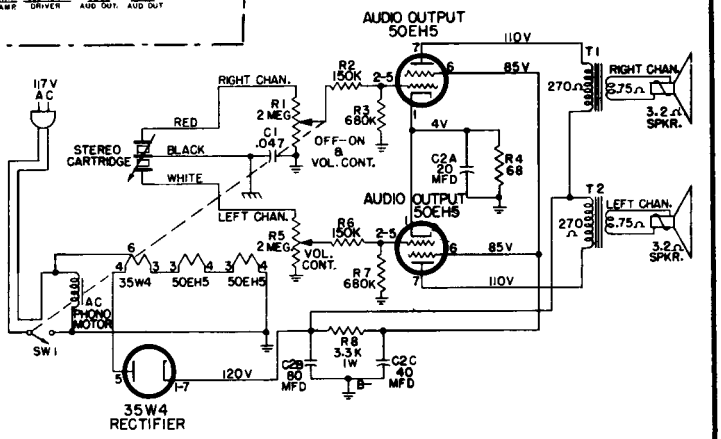

NOTES:
1. ALL CAPACITANCE VALUES IN MFD AND ALL RESISTANCE VALUES IN OHMS UNLESS OTHERWISE STATED.
2. ALL VOLTAGES MEASURED FROM B- USING A V.T.V.M. LINE VOLTAGE SET AT 117 V.A.C. READINGS SHOULD BE AS SHOWN ±20%.
3. CHASSIS GROUND ⏚ COMMON B- ⏚

Chassis V-2508-5, Models H-75AC1A, H-75AC2A
Chassis V-2508-14, Models H-96AC1, H-96AC2

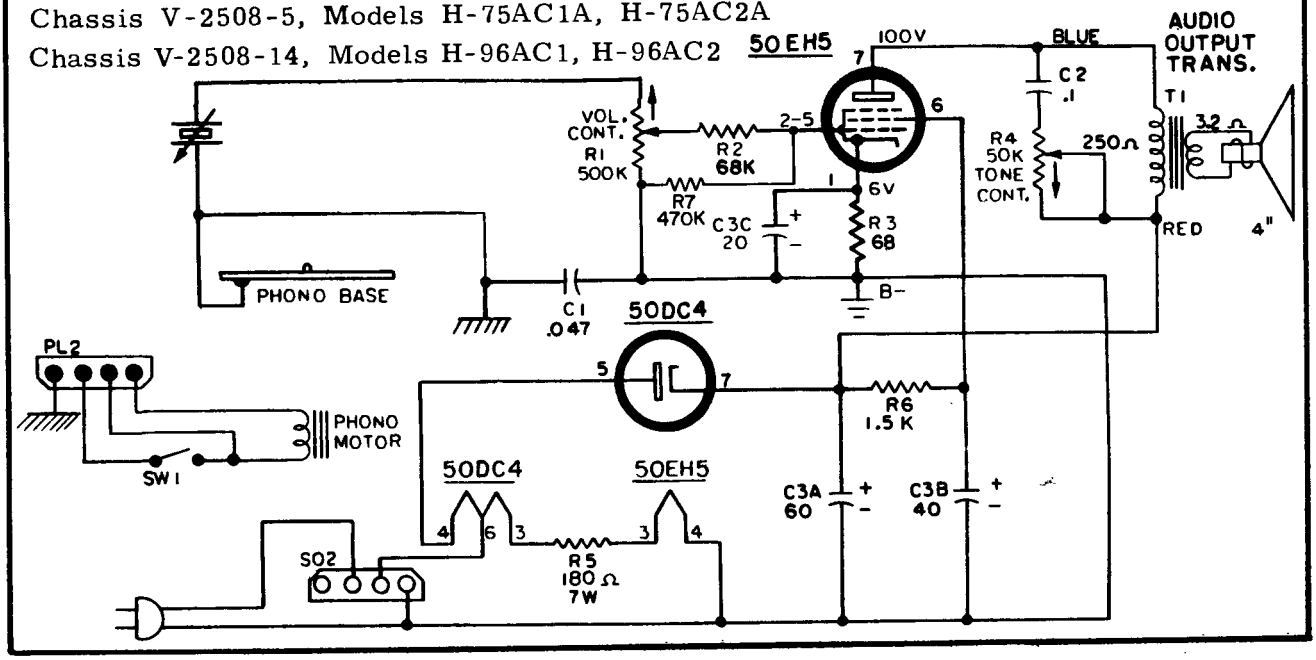

WESTINGHOUSE Chassis V-2508-13, Models H-85MP1, H-85MP2, H-85MP3

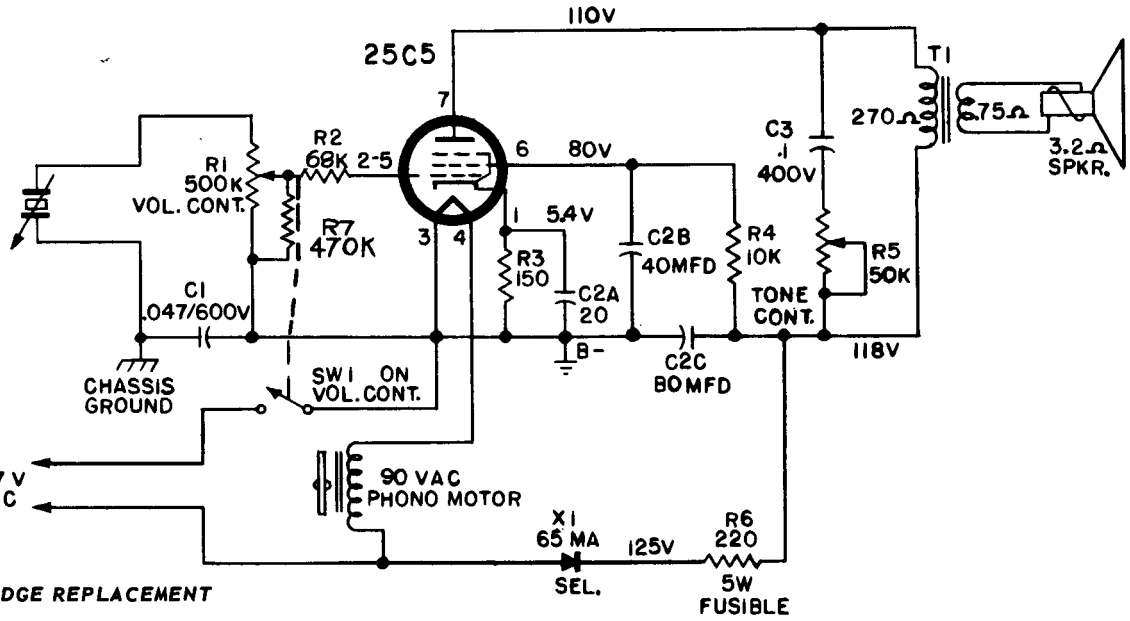

CARTRIDGE REPLACEMENT

1. Remove the knob retainer screw and turnover knob.
2. Pull the cartridge out from the tone arm. Remove the spring, washer, and push-on connectors.

CHASSIS REMOVAL

1. Remove two nylon-head screws from bottom of cabinet base.
2. Remove turntable.
3. Remove two screws located underneath turntable.
4. Snap the edge of the motorboard out of the retaining grooves in the cabinet. Lift motorboard out of cabinet.

CHASSIS V-2508-11, MODEL H-87ACS1

CHASSIS REMOVAL

1. Remove the tube service cover.
2. Remove the speaker compartment cover on the left side of the cabinet.
3. Remove the screws holding the motorboard. Lift the motorboard out of the cabinet.
4. Disengage the amp-lok from the changer. Unsolder the leads to the changer terminal board and the leads to the speakers.
5. Remove the control panel screws and lift the control panel out of the cabinet. The chassis is attached to studs on the underside of this panel.

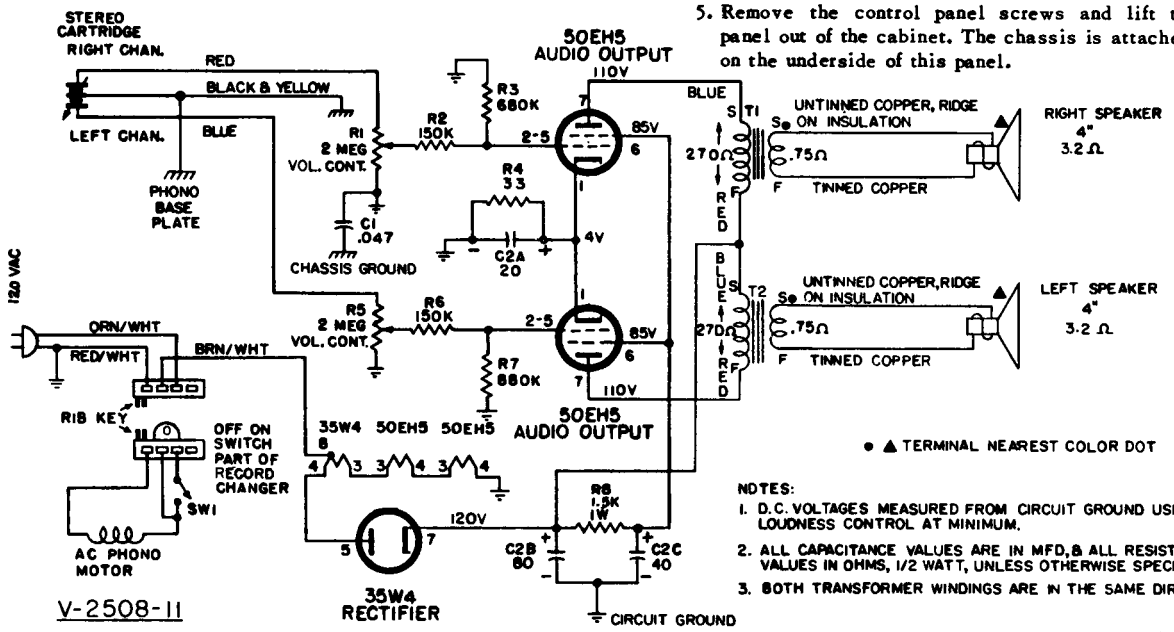

NOTES:
1. D.C. VOLTAGES MEASURED FROM CIRCUIT GROUND USING A VTVM, LOUDNESS CONTROL AT MINIMUM.
2. ALL CAPACITANCE VALUES ARE IN MFD, & ALL RESISTANCE VALUES IN OHMS, 1/2 WATT, UNLESS OTHERWISE SPECIFIED.
3. BOTH TRANSFORMER WINDINGS ARE IN THE SAME DIRECTION.

V-2508-11

WESTINGHOUSE Chassis V–2523-1, Model H-89ACS1

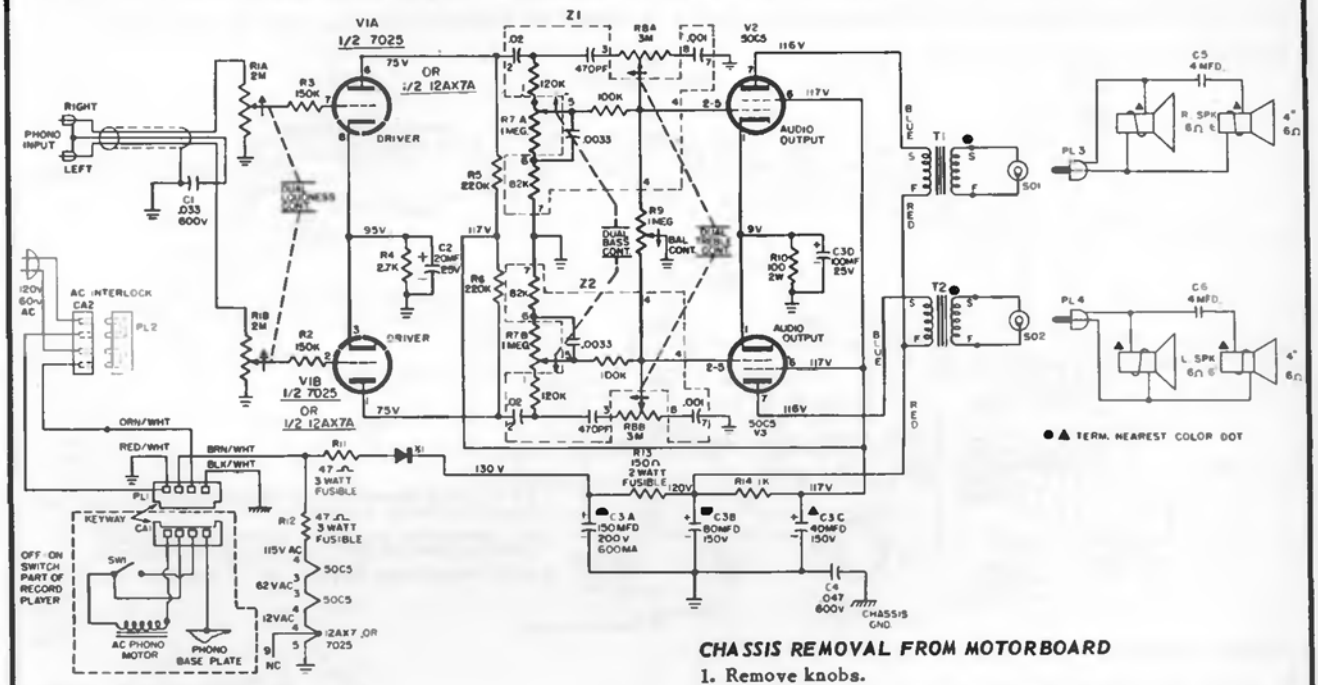

MOTORBOARD REMOVAL

1. Remove 4 rubber feet from bottom of case.
2. Lift entire motor board up and out of the case. Interlock plate screws must be removed before you can lift motor board. Be careful when pulling the motorboard out of the case. See that all components on the bottom of the board clear the case. In some instances it may be necessary to remove the tube service cover and pry the interlock out of its socket.
3. Unsolder the leads connected to phono output jacks. Note the colors and resolder the leads to the same terminals when they are replaced.

CHASSIS REMOVAL FROM MOTORBOARD

1. Remove knobs.
2. Remove 2 screws from control escutcheon.
3. Remove 2 screws from board underneath the control escutcheon.
4. Remove 2 screws located underneath the wooden escutcheon. These are accessible through holes in the escutcheon.
5. Disconnect the amplok and phono plug from the changer.
6. Remove one screw holding power supply section of chassis to motorboard.
7. Remove all chicken bands and tape from wires.
8. Remove the screw holding the line cord, located inside the plastic cup.

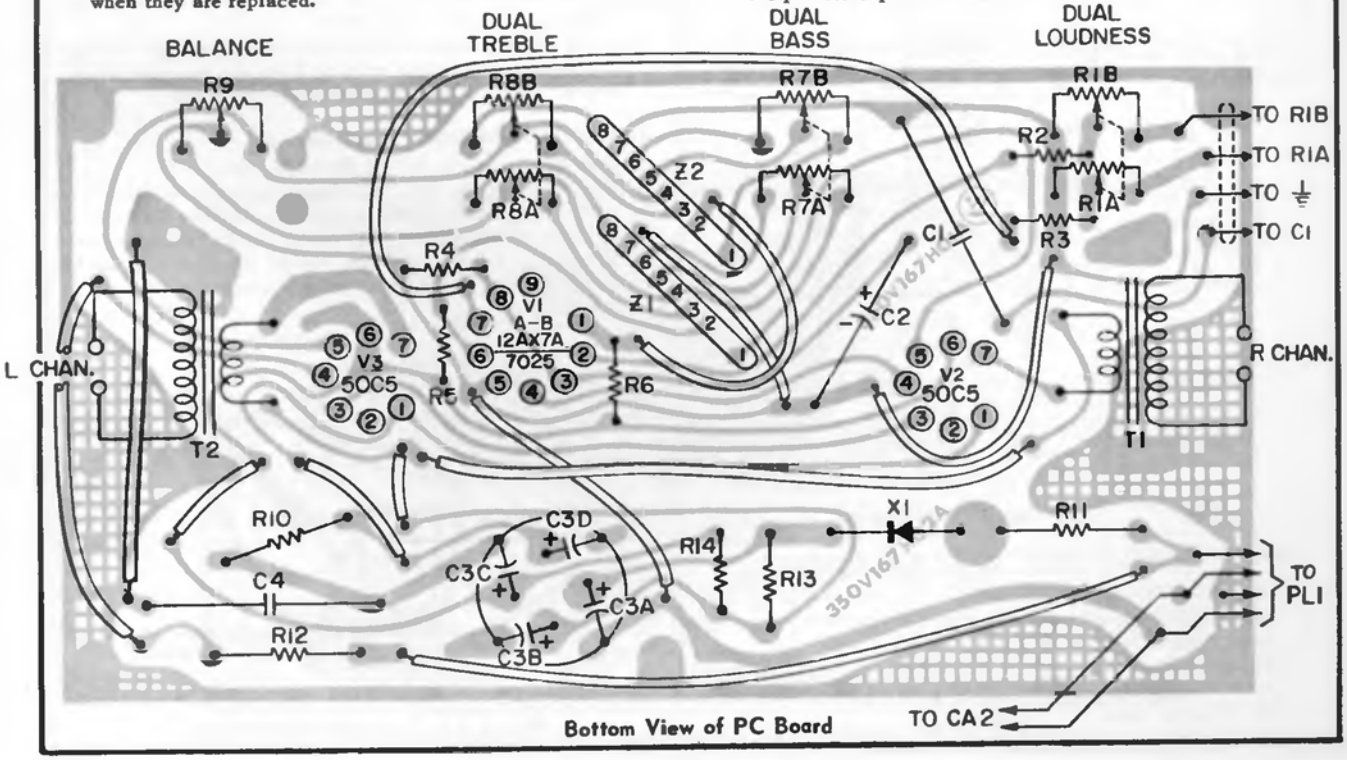

Bottom View of PC Board

WESTINGHOUSE Chassis V-2527-2, Models H-86ACS1A, H-86ACS2A, Also applicable to Chassis V-2527-1 used in same models and H-86ACS3.

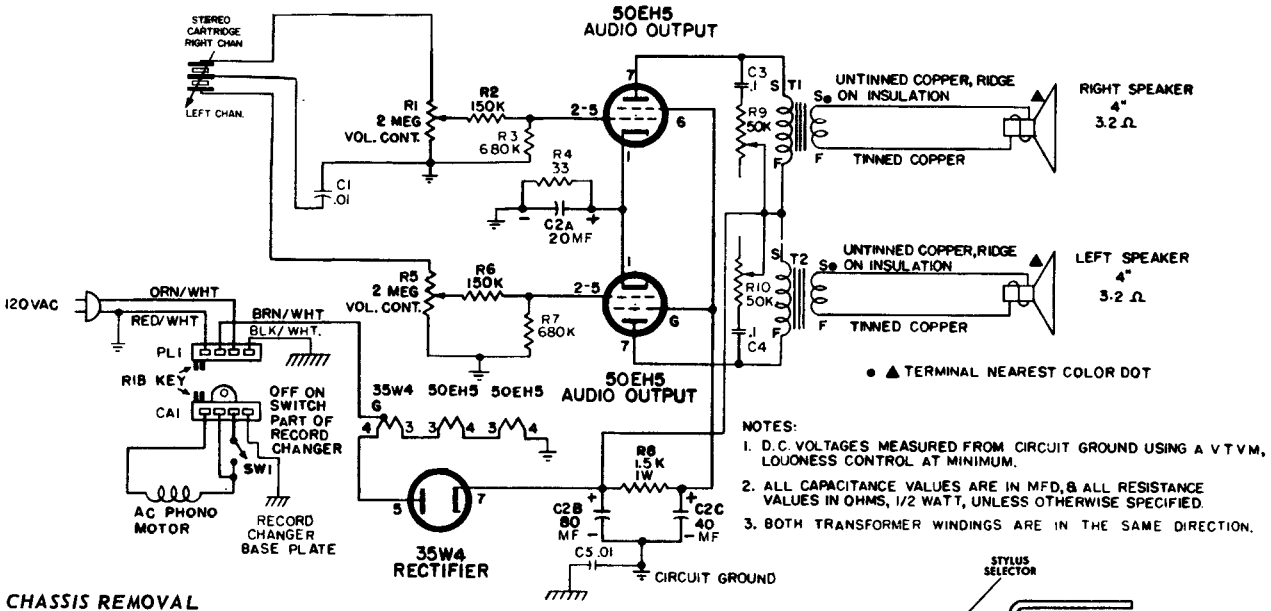

NOTES:
1. D.C. VOLTAGES MEASURED FROM CIRCUIT GROUND USING A VTVM, LOUDNESS CONTROL AT MINIMUM.
2. ALL CAPACITANCE VALUES ARE IN MFD. & ALL RESISTANCE VALUES IN OHMS, 1/2 WATT, UNLESS OTHERWISE SPECIFIED.
3. BOTH TRANSFORMER WINDINGS ARE IN THE SAME DIRECTION.

CHASSIS REMOVAL

1. Remove the perforated tube service cover, attached by one phillips screw.
2. Remove 4 phillips screws holding the motor-board. Lift the motor-board out of the cabinet.
3. Disengage the amp-lok and unsolder the three input leads to the amplifier. Unsolder the leads connected to the output transformers.
4. Remove the 3 knobs.
5. Remove the 4 speed nuts holding the chassis to the cabinet side. Remove the chassis from the cabinet.

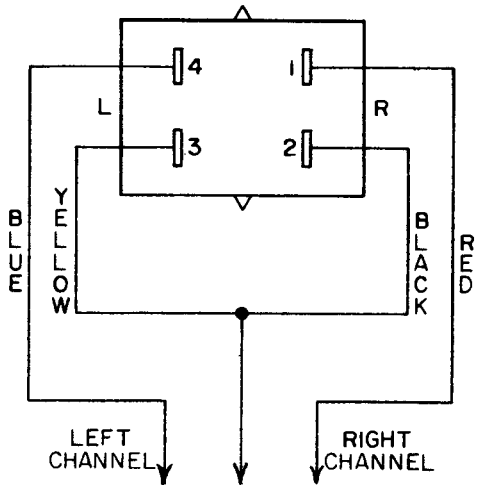

Figure 1 – Cartridge Wiring Diagram

CARTRIDGE REPLACEMENT (CHASSIS V-2527-2)

1. Observe the sequence of wires, as shown in Figure 1. Remove the push-on connectors from the terminals.
2. Remove the screw from the stylus selector knob.
3. Remove the cartridge, pulling it away from the cartridge holder. CAUTION: A spring and 2 washers are located on the mounting shaft.

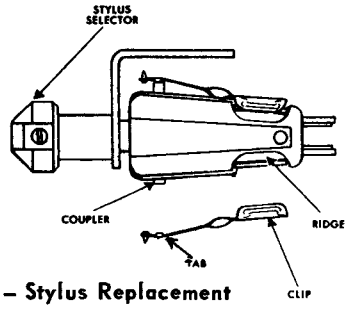

Figure 2 – Stylus Replacement

4. Slide the new cartridge into the cartridge holder with the stylus marked SA-250 facing in the same direction as the side of the stylus marking 33-45.
5. Apply slight pressure to the rear of the cartridge to align the holes in the stylus selector knob and mounting shaft. Replace the screw in the stylus selector knob.

STYLUS REPLACEMENT (see Figure 2)

1. Pull the stylus clip off the cartridge ridge.
2. Push the clip of the replacement stylus onto the ridge.
3. Lift the front part of the stylus a small amount so that it is not pressing against the coupler – then let it fall back and engage the coupler. The tabs on the stylus should be centered, with one on each side of the projecting end of the coupler.

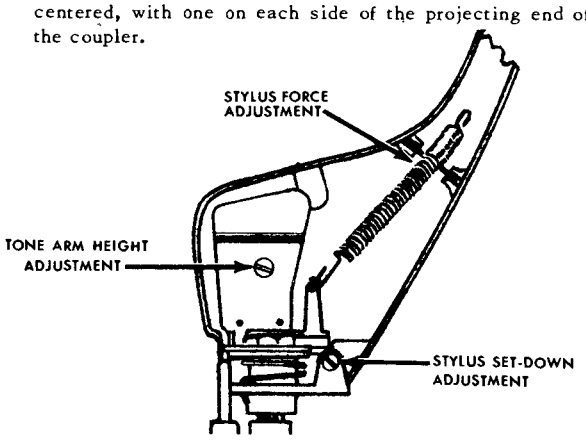

Figure 3 – Tone Arm Adjustments

WESTINGHOUSE Chassis V-2522-1, -2, Models H-79ACS1B, H-79ACS2B, H-88ACS1
Chassis V-2522-3, Models H-90ACS1, H-90ACS2, H-90ACS3,
are similar to sets listed.

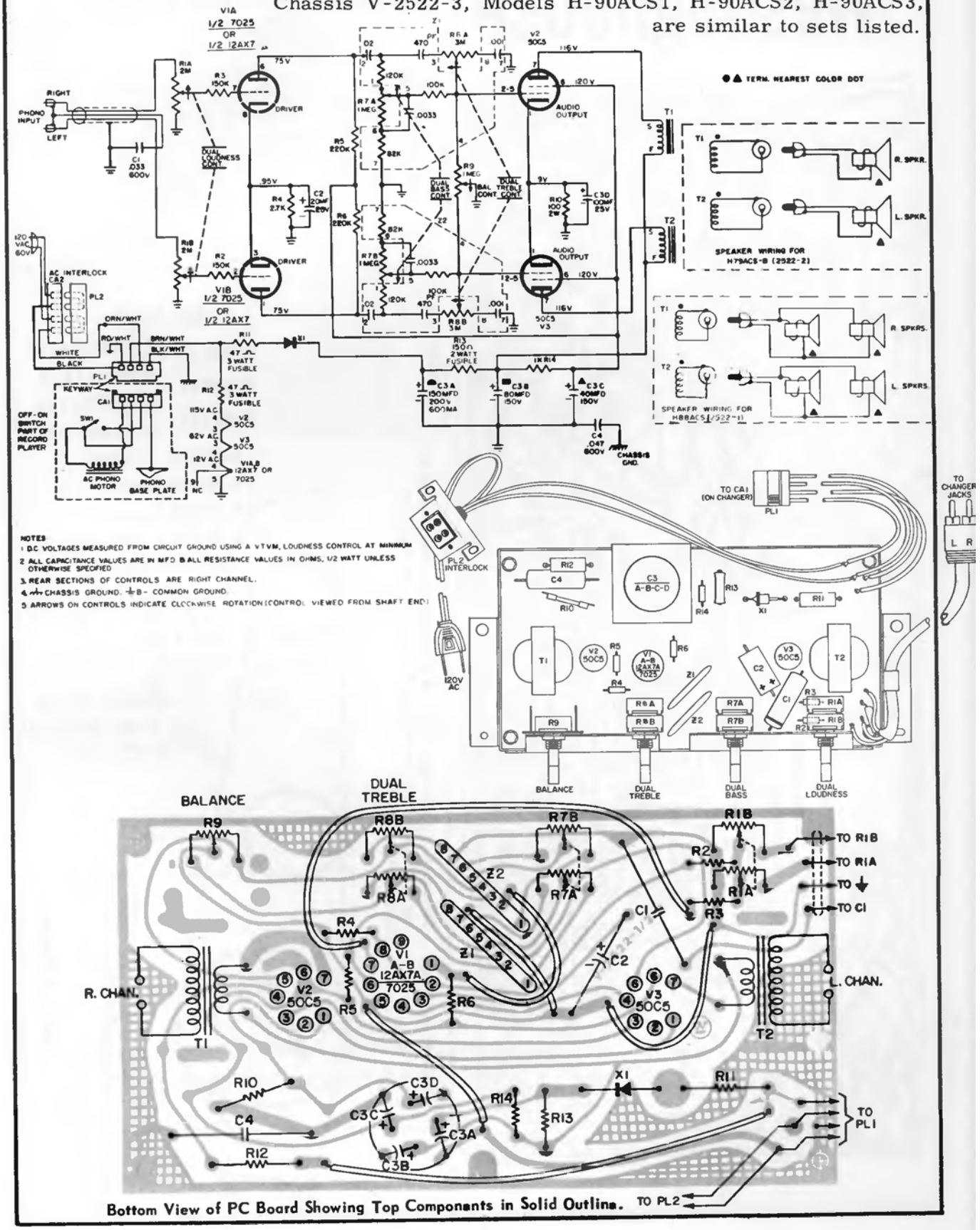

NOTES
1. DC VOLTAGES MEASURED FROM CIRCUIT GROUND USING A VTVM, LOUDNESS CONTROL AT MINIMUM
2. ALL CAPACITANCE VALUES ARE IN MFD & ALL RESISTANCE VALUES IN OHMS, 1/2 WATT UNLESS OTHERWISE SPECIFIED
3. REAR SECTIONS OF CONTROLS ARE RIGHT CHANNEL.
4. CHASSIS GROUND. ⏚B- COMMON GROUND.
5. ARROWS ON CONTROLS INDICATE CLOCKWISE ROTATION (CONTROL VIEWED FROM SHAFT END)

Bottom View of PC Board Showing Top Components in Solid Outline.

Westinghouse

(Continued on page at right)

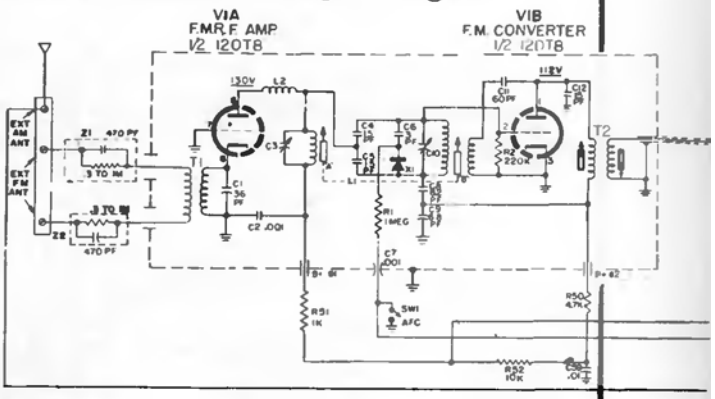

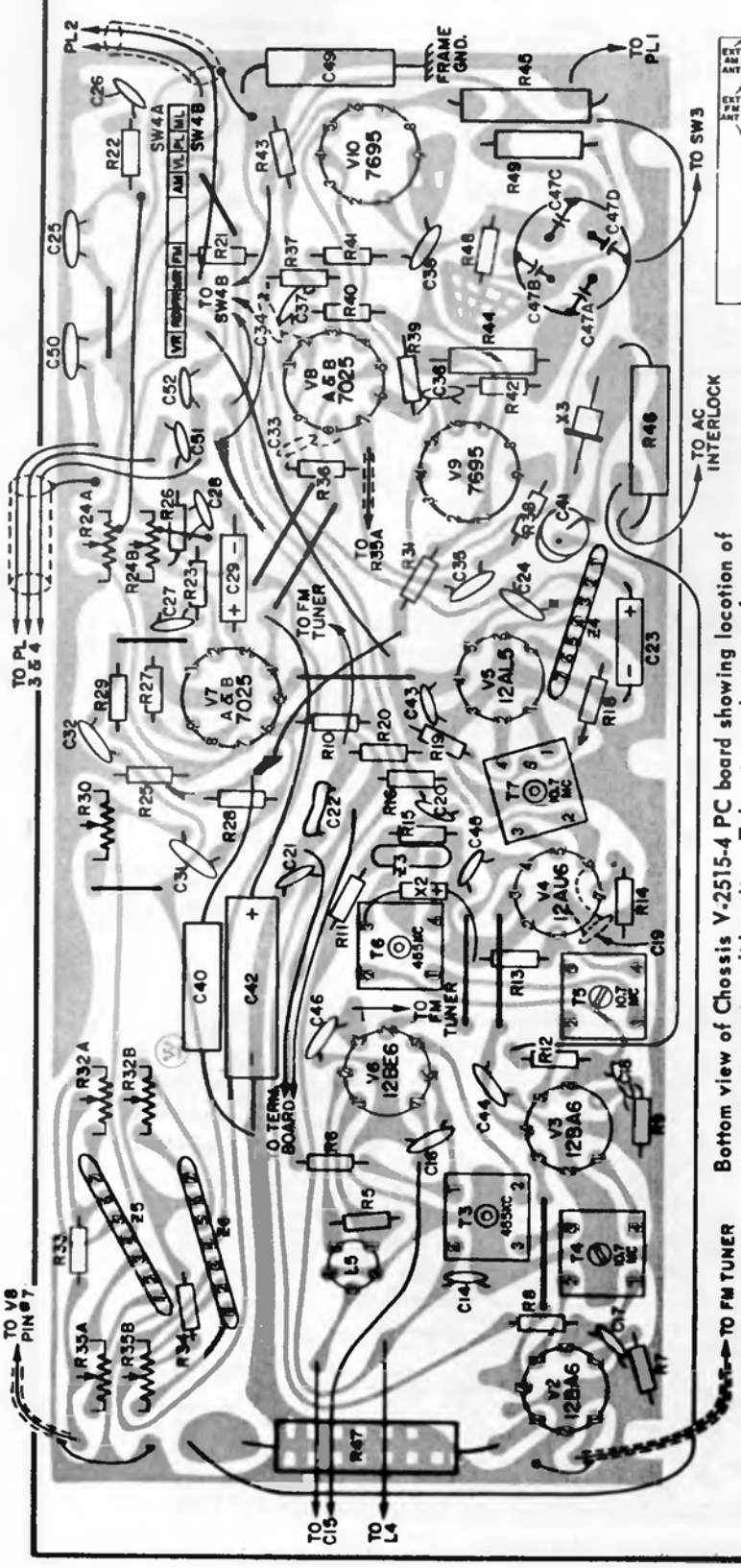

Bottom view of Chassis V-2515-4 PC board showing location of top components in solid outline. Tube pin numbering is for bottom of socket.

MODELS

H-M1790	H-M1810/A/B
H-M1791	H-M1811/A/B
H-M1793	H-M1813/A/B
	H-M1815/A/B

H-M1910 *(walnut)*
H-M1911 *(cherry)*
H-M1913 *(maple)*
H-M1914 *(butternut)*

CHASSIS V-2515-4

and similar Models H-M1760, H-M1761, H-M1763, using Chassis V-2515-8.

(Continued on the next page adjacent at right)

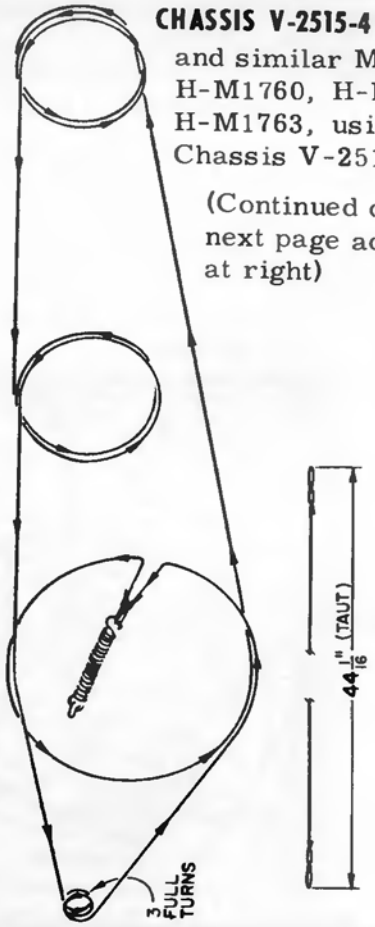

Dial Cord Stringing

WESTINGHOUSE Chassis V-2515-4, Models H-M1810/A/B, H-M1811/A/B, H-M1813/A/B, H-M1815/A/B, H-M1910, H-M1911, H-M1913, and H-M1914, and others models, continued from preceding page.

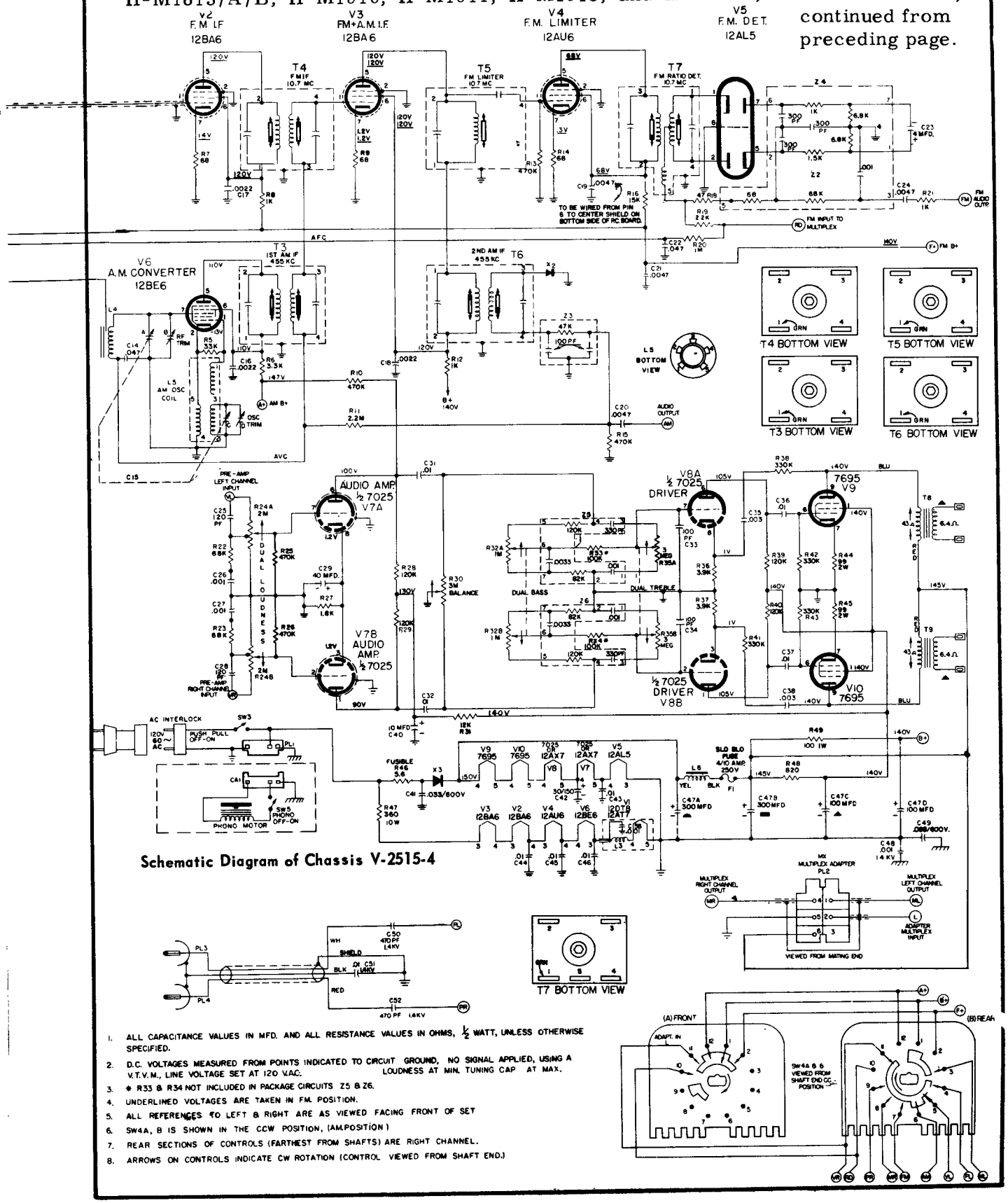

Schematic Diagram of Chassis V-2515-4

1. ALL CAPACITANCE VALUES IN MFD. AND ALL RESISTANCE VALUES IN OHMS, ½ WATT, UNLESS OTHERWISE SPECIFIED.
2. D.C. VOLTAGES MEASURED FROM POINTS INDICATED TO CIRCUIT GROUND, NO SIGNAL APPLIED, USING A V.T.V.M., LINE VOLTAGE SET AT 120 V.A.C. LOUDNESS AT MIN. TUNING CAP AT MAX.
3. * R33 & R34 NOT INCLUDED IN PACKAGE CIRCUITS Z5 & Z6.
4. UNDERLINED VOLTAGES ARE TAKEN IN FM. POSITION.
5. ALL REFERENCES TO LEFT & RIGHT ARE AS VIEWED FACING FRONT OF SET
6. SW4A, B IS SHOWN IN THE CCW POSITION, (AM POSITION)
7. REAR SECTIONS OF CONTROLS (FARTHEST FROM SHAFTS) ARE RIGHT CHANNEL.
8. ARROWS ON CONTROLS INDICATE CW ROTATION (CONTROL VIEWED FROM SHAFT END.)

ZENITH Model Royal 130, Chassis 6KT47Z1

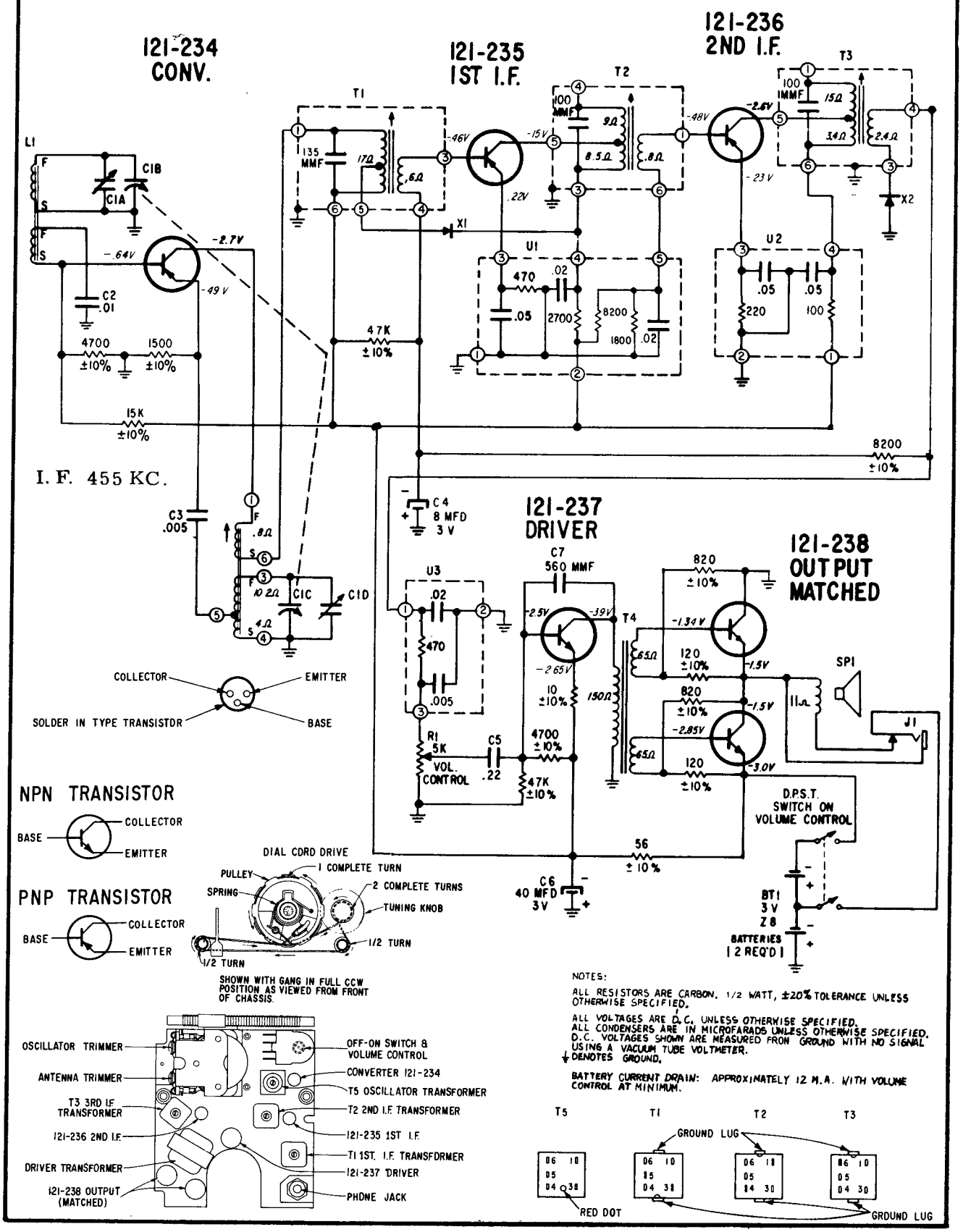

ZENITH RADIO MODELS L519C, F, G, W CHASSIS 5L07

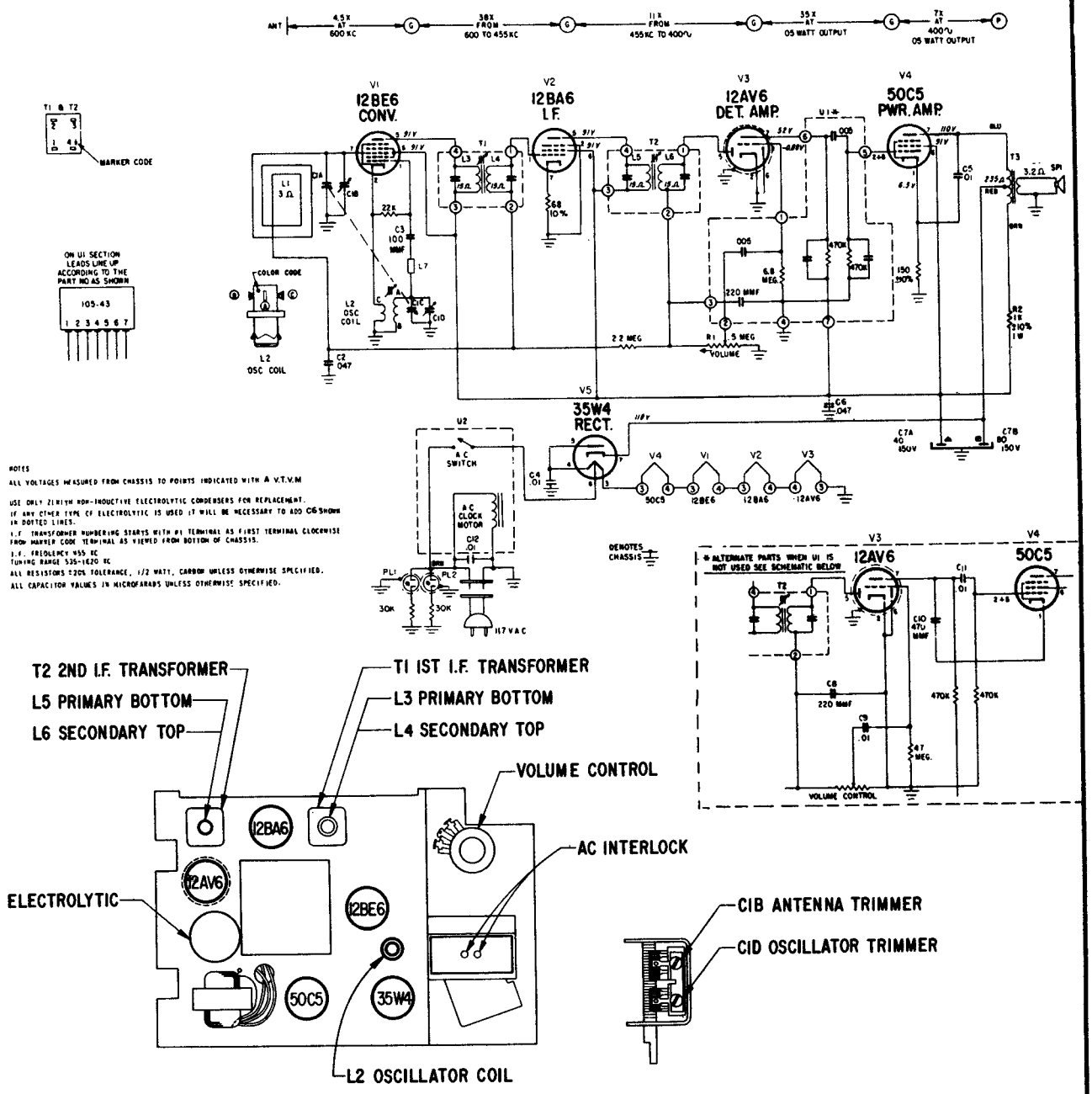

ALIGNMENT PROCEDURE

Operation	Connect Oscillator To	Dummy Antenna	Input Sig. Frequency	Set Dial At	Trimmers	Purpose
1	Converter Grid	.5 Mfd.	455 Kc.	600 Kc.	L3,L4,L5, L6	For I.F. Alignment.
2	One Turn Loop Coupled Loosely to Wave Magnet	—	1600 Kc.	1600 Kc.	CID	Set Oscillator to Dial Scale
3		—	1400 Kc.	1400 Kc.	CIB	Align Antenna Stage

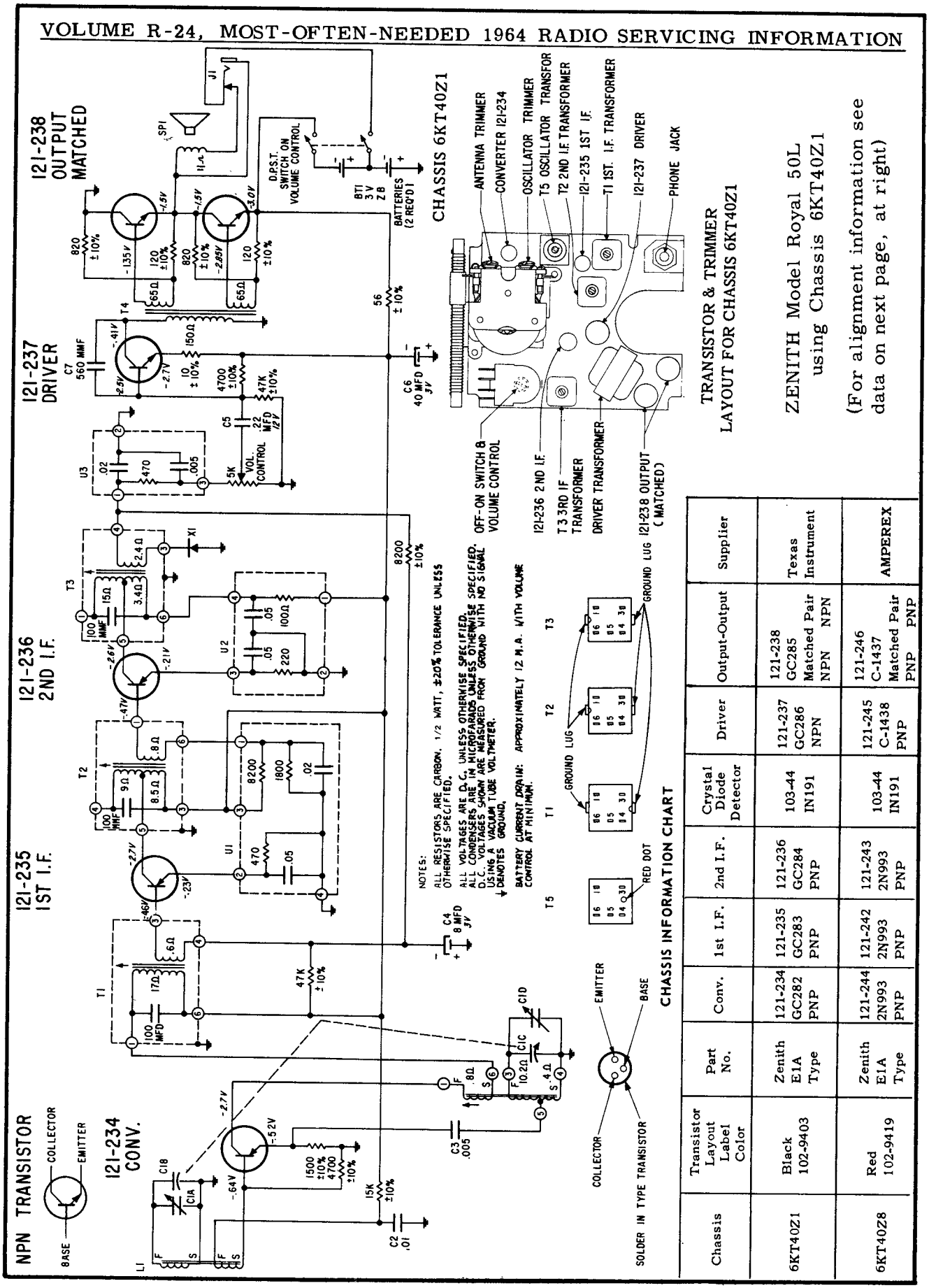

TRANSISTOR & TRIMMER LAYOUT FOR CHASSIS 6KT40Z1

ZENITH Model Royal 50L using Chassis 6KT40Z1

(For alignment information see data on next page, at right)

CHASSIS INFORMATION CHART

Chassis	Transistor Layout Label Color	Part No.	Conv.	1st I.F.	2nd I.F.	Crystal Diode Detector	Driver	Output-Output	Supplier
6KT40Z1	Black 102-9403	Zenith E1A Type	121-234 GC282 PNP	121-235 GC283 PNP	121-236 GC284 PNP	103-44 IN191	121-237 GC286 NPN	121-238 GC285 Matched Pair NPN NPN	Texas Instrument
6KT40Z8	Red 102-9419	Zenith E1A Type	121-244 2N993 PNP	121-242 2N993 PNP	121-243 2N993 PNP	103-44 IN191	121-245 C-1438 PNP	121-246 C-1437 Matched Pair PNP PNP	AMPEREX

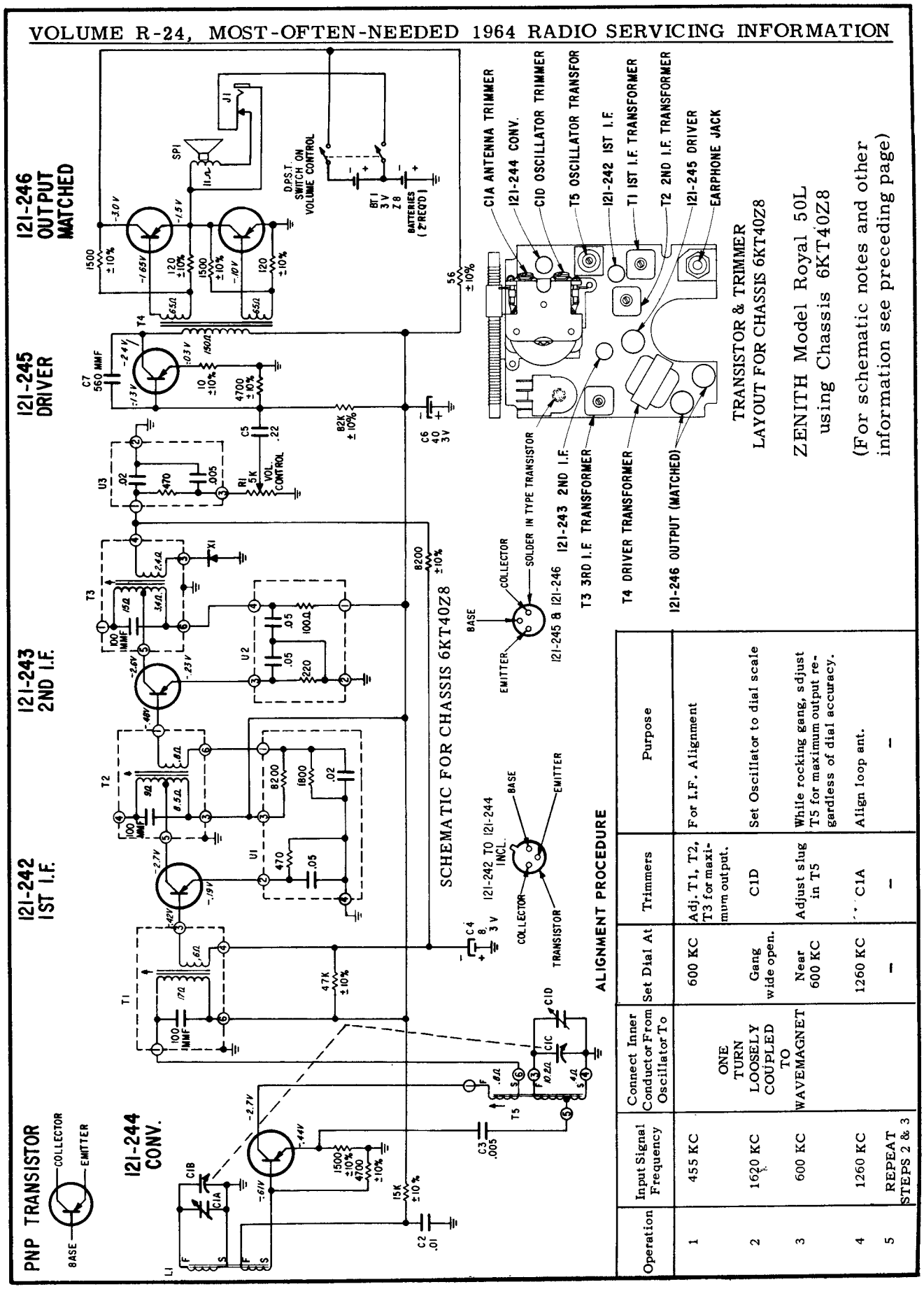

ALIGNMENT PROCEDURE

Operation	Input Signal Frequency	Connect Inner Conductor From Oscillator To	Set Dial At	Trimmers	Purpose
1	455 KC	ONE TURN LOOSELY COUPLED TO WAVEMAGNET	600 KC	Adj. T1, T2, T3 for maximum output.	For I.F. Alignment
2	1620 KC		Gang wide open.	C1D	Set Oscillator to dial scale
3	600 KC		Near 600 KC	Adjust slug in T5	While rocking gang, sdjust T5 for maximum output regardless of dial accuracy.
4	1260 KC		1260 KC	C1A	Align loop ant.
5	REPEAT STEPS 2 & 3		–	–	–

ZENITH Models 265, 645, 670, Chassis 6KT41Z1, 6KT42Z1, 6KT45Z1

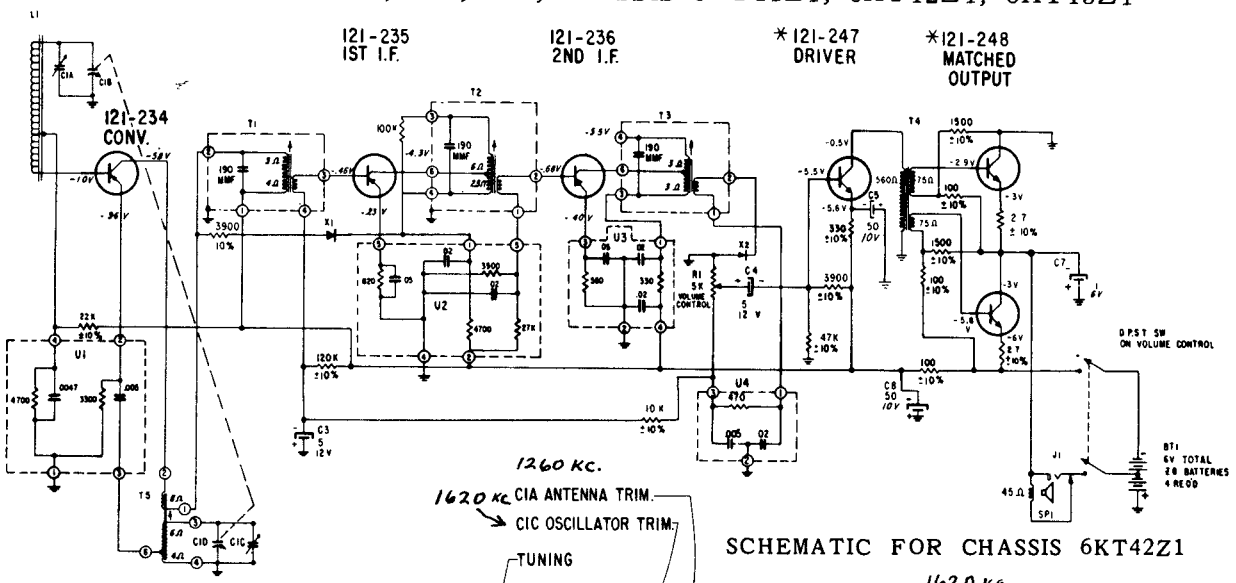

SCHEMATIC FOR CHASSIS 6KT42Z1

NOTES:
ALL RESISTORS ARE CARBON, 1/2 WATT, ±20% TOLERANCE UNLESS OTHERWISE SPECIFIED.
ALL VOLTAGES ARE D.C. UNLESS OTHERWISE SPECIFIED.
ALL CONDENSERS ARE IN MICROFARADS UNLESS OTHERWISE SPECIFIED.
D.C. VOLTAGES SHOWN ARE MEASURED FROM CHASSIS WITH NO SIGNAL USING A VACUUM TUBE VOLTMETER
DENOTES CHASSIS
BATTERY CURRENT DRAIN APPROX. 6.5 MA WITH VOLUME CONTROL AT MINIMUM.
SPEAKER IMPEDANCE 22Ω AT 400 CPS

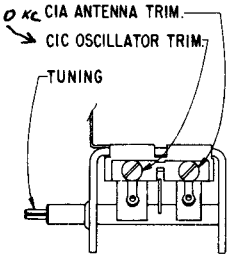

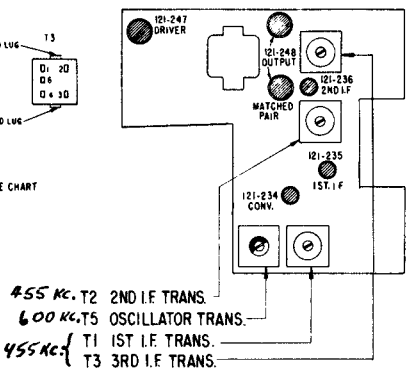

TRANSISTOR & TRIMMER LAYOUT FOR CHASSIS 6KT45Z1 & 6KT41Z1

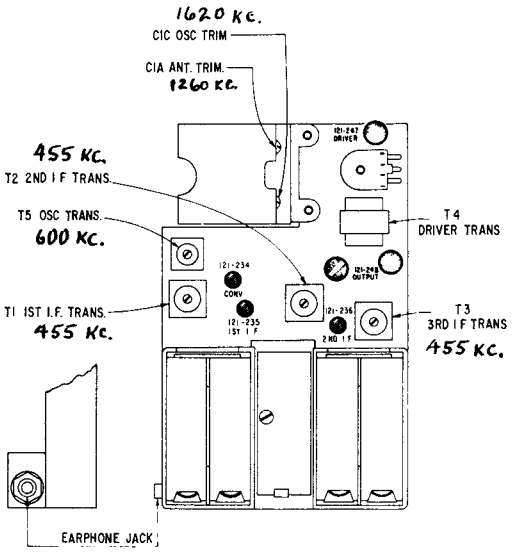

TRANSISTOR & TRIMMER LAYOUT FOR CHASSIS 6KT42Z1

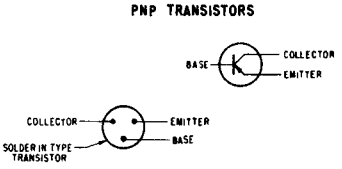

DRIVER	MATCHED OUTPUT
121-247	121-248
VIOLET	BLACK
BLACK	VIOLET
WHITE	BLUE

* THE MATCHING IDENTIFICATION WILL BE A COLORED DOT. THE MATCHING OF TRANSISTORS WILL BE AS INDICATED IN THE ABOVE CHART

PNP TRANSISTORS

NPN TRANSISTOR

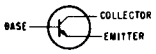

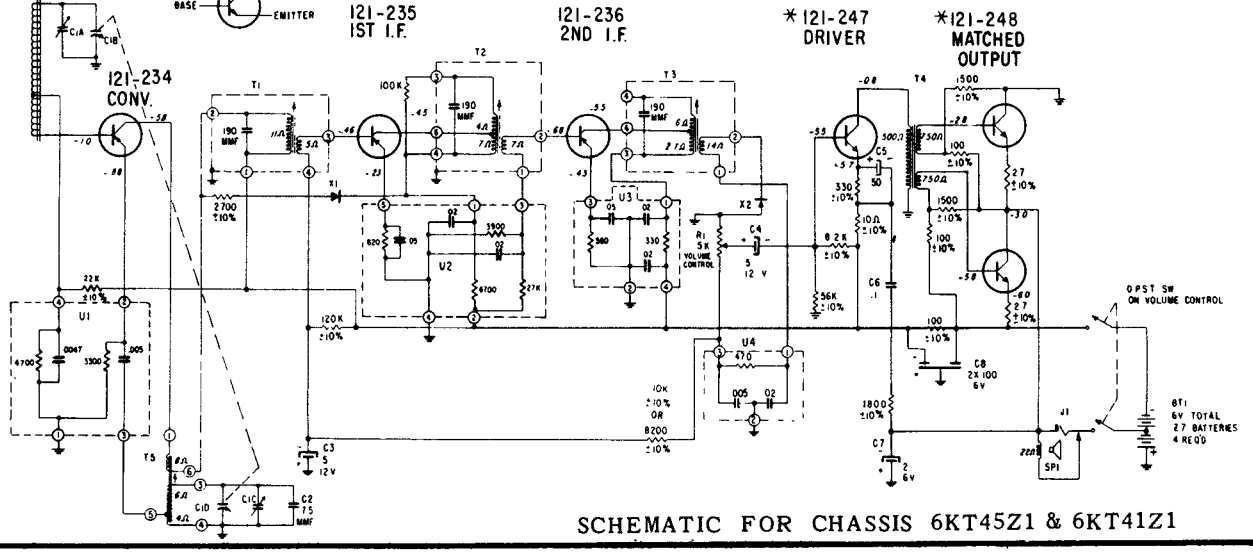

SCHEMATIC FOR CHASSIS 6KT45Z1 & 6KT41Z1

ZENITH MODELS 265, 645, 670, CHASSIS 6KT41Z1, 6KT42Z1, 6KT45Z1

(Diagram on preceding page)

CHASSIS, WIRING AND COMPONENTS

VIEWED FROM WIRING SIDE

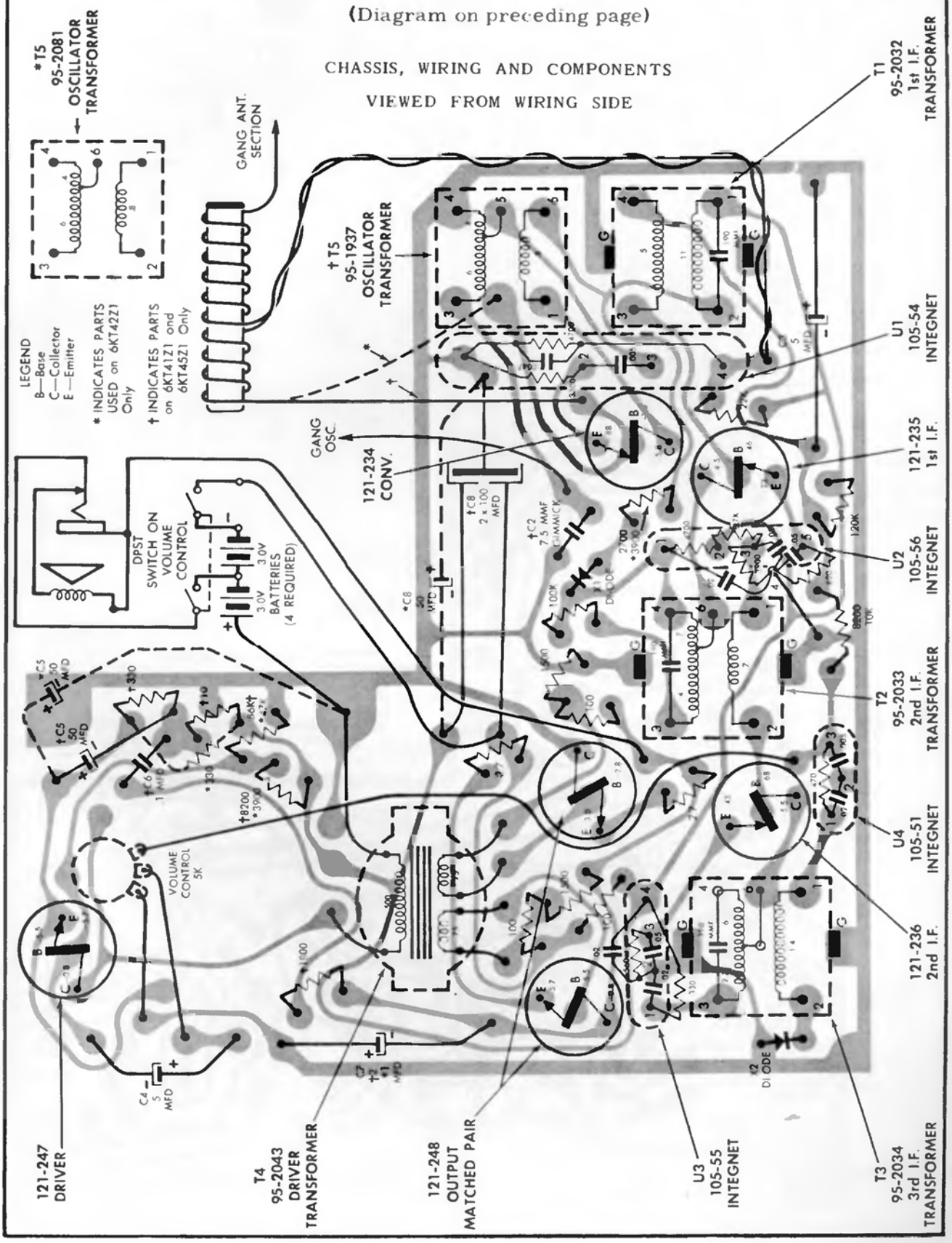

ZENITH Model "Royal 490" Chassis 7KT45Z1

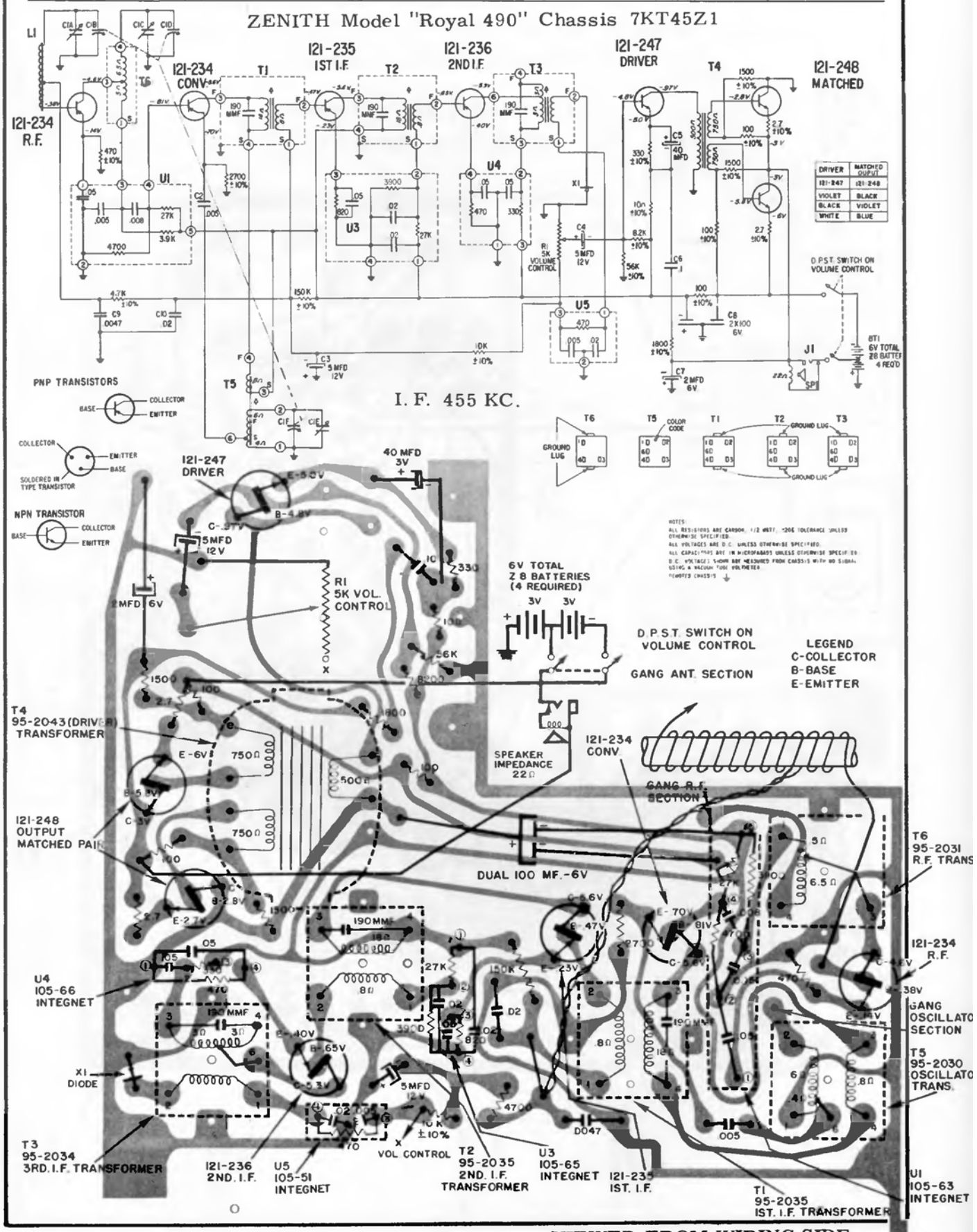

VIEWED FROM WIRING SIDE

ZENITH RADIO Model K615B, C, W, Chassis 6K05

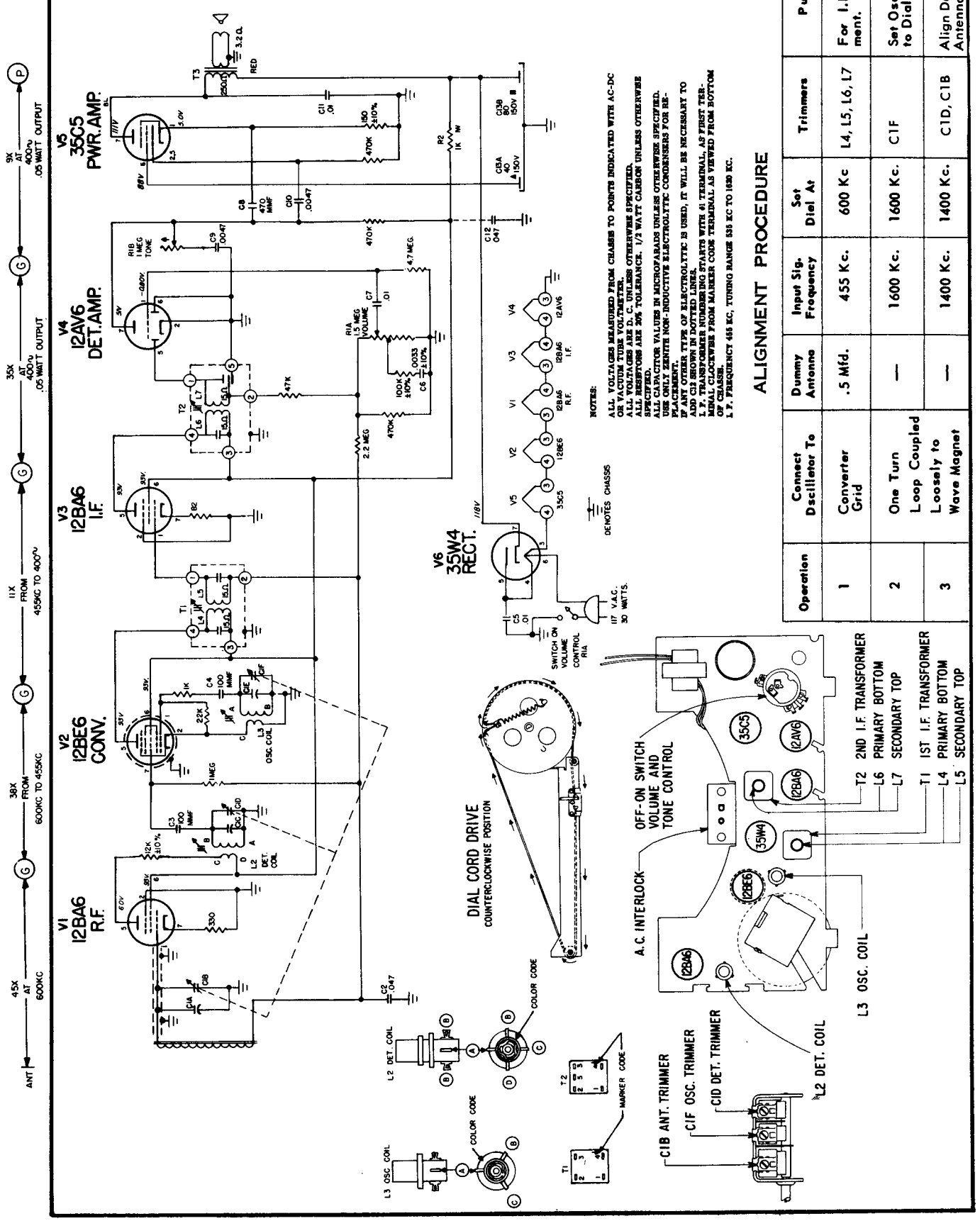

NOTES:
ALL VOLTAGES MEASURED FROM CHASSIS TO POINTS INDICATED WITH AC-DC OR VACUUM TUBE VOLTMETER.
ALL VOLTAGES ARE D. C. UNLESS OTHERWISE SPECIFIED.
ALL RESISTORS ARE 20% TOLERANCE, 1/2 WATT CARBON UNLESS OTHERWISE SPECIFIED.
CAPACITOR VALUES IN MICROFARADS UNLESS OTHERWISE SPECIFIED.
USE ONLY ZENITH NON-INDUCTIVE ELECTROLYTIC CONDENSERS FOR REPLACEMENT.
IF ANY OTHER TYPE OF ELECTROLYTIC IS USED, IT WILL BE NECESSARY TO ADD C12 SHOWN IN DOTTED LINES.
I. F. TRANSFORMER NUMBERING STARTS WITH #1 TERMINAL, AS FIRST TERMINAL CLOCKWISE FROM MARKER CODE TERMINAL AS VIEWED FROM BOTTOM OF CHASSIS.
I. F. FREQUENCY 455 KC, TUNING RANGE 535 KC TO 1650 KC.

ALIGNMENT PROCEDURE

Operation	Connect Oscillator To	Dummy Antenna	Input Sig. Frequency	Set Dial At	Trimmers	Purpose
1	Converter Grid	.5 Mfd.	455 Kc.	600 Kc	L4, L5, L6, L7	For I.F. Alignment.
2	One Turn Loop Coupled	—	1600 Kc.	1600 Kc.	C1F	Set Oscillator to Dial Scale
3	Loosely to Wave Magnet	—	1400 Kc.	1400 Kc.	C1D, C1B	Align Detector and Antenna Stage

ZENITH RADIO MODEL L624 CHASSIS 6L03

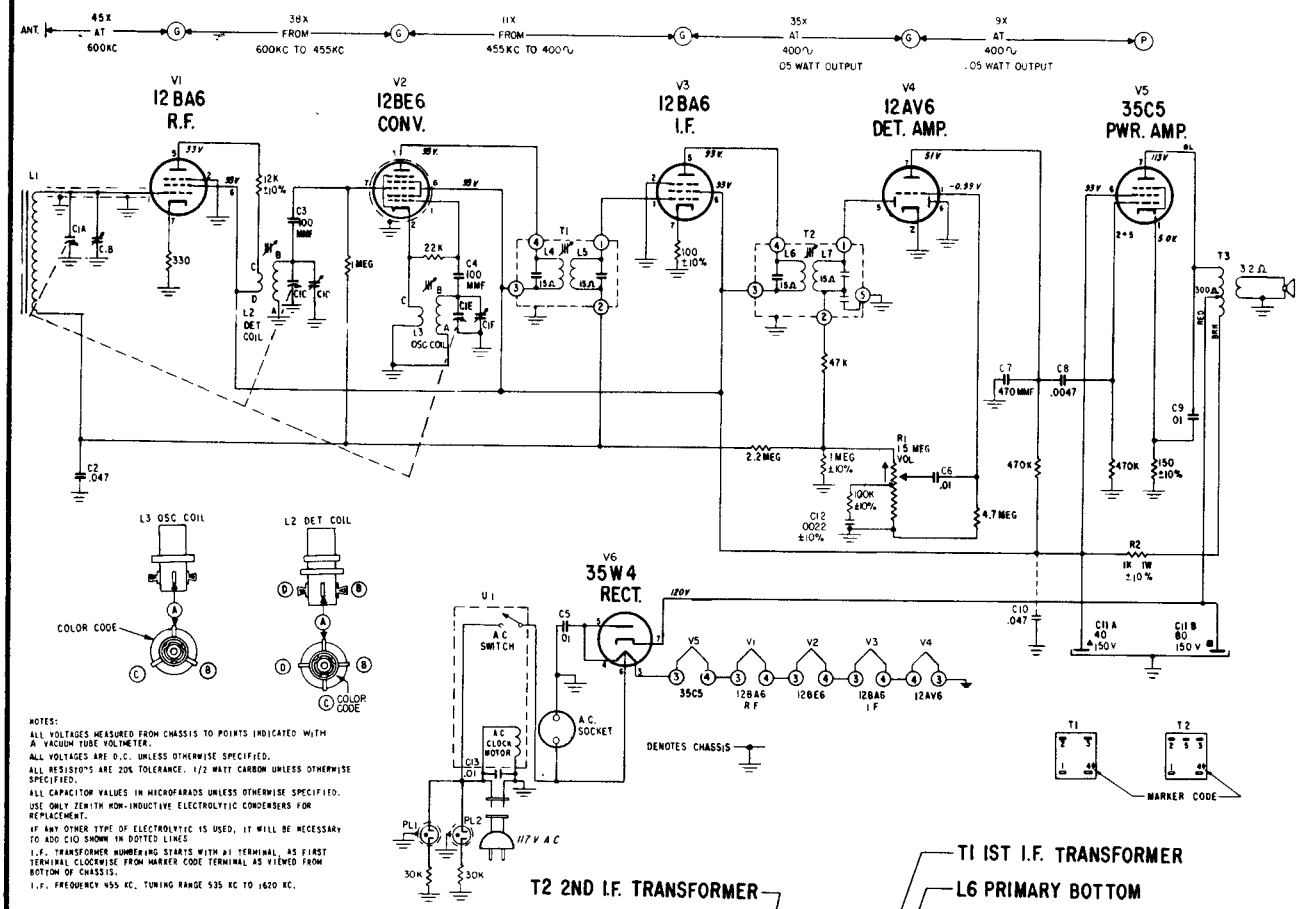

NOTES:

ALL VOLTAGES MEASURED FROM CHASSIS TO POINTS INDICATED WITH A VACUUM TUBE VOLTMETER.

ALL VOLTAGES ARE D.C. UNLESS OTHERWISE SPECIFIED.

ALL RESISTORS ARE 20% TOLERANCE. 1/2 WATT CARBON UNLESS OTHERWISE SPECIFIED.

ALL CAPACITOR VALUES IN MICROFARADS UNLESS OTHERWISE SPECIFIED.

USE ONLY ZENITH NON-INDUCTIVE ELECTROLYTIC CONDENSERS FOR REPLACEMENT.

IF ANY OTHER TYPE OF ELECTROLYTIC IS USED, IT WILL BE NECESSARY TO ADD C10 SHOWN IN DOTTED LINES

I.F. TRANSFORMER NUMBERING STARTS WITH #1 TERMINAL AS FIRST TERMINAL CLOCKWISE FROM MARKER CODE TERMINAL AS VIEWED FROM BOTTOM OF CHASSIS.

I.F. FREQUENCY 455 KC. TUNING RANGE 535 KC TO 1620 KC.

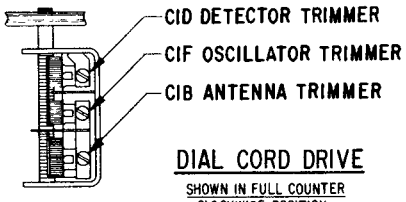

DIAL CORD DRIVE

SHOWN IN FULL COUNTER CLOCKWISE POSITION

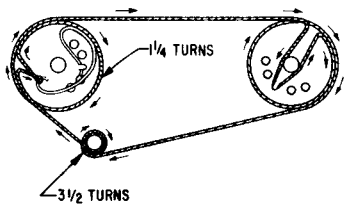

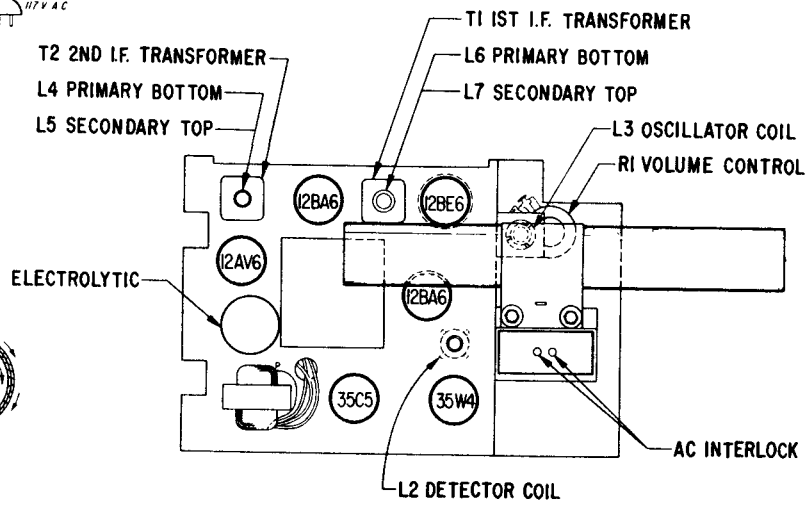

ALIGNMENT PROCEDURE

Operation	Connect Oscillator To	Dummy Antenna	Input Sig. Frequency	Set Dial At	Trimmers	Purpose
1	Converter Grid	.5 Mfd.	455 Kc.	600 Kc.	L4,L5,L6, L7	For I.F. Alignment.
2	One Turn Loop Coupled Loosely to Wave-magnet	——	1600 Kc.	1600 Kc.	C1F	Set Oscillator to Dial Scale.
3		——	1400 Kc.	1400 Kc.	C1D, C1B	Align Detector and Antenna Stage.

ZENITH RADIO MODEL L722C, G&W CHASSIS 6L06

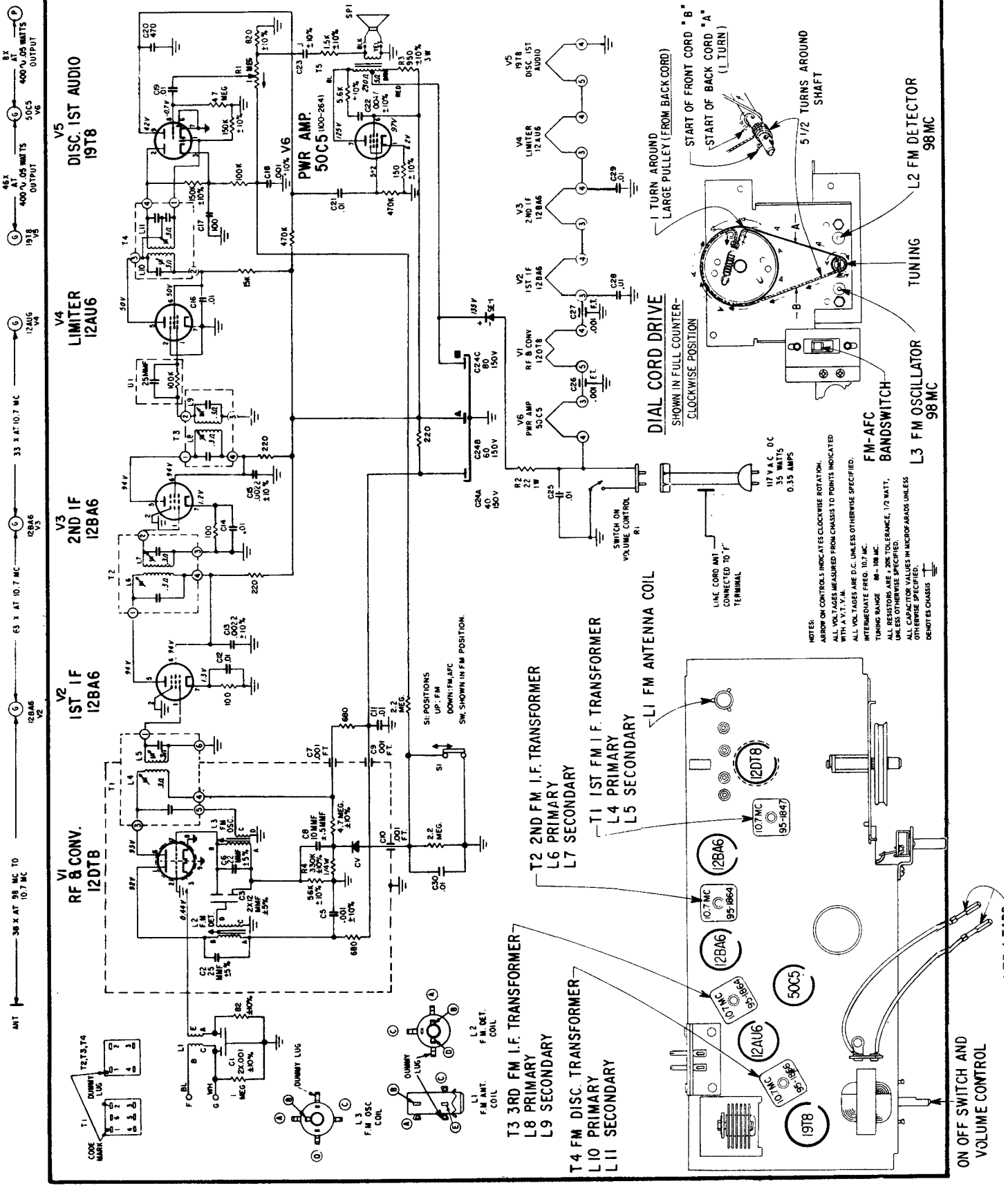

ZENITH RADIO MODEL L723C, G&W CHASSIS 7L04

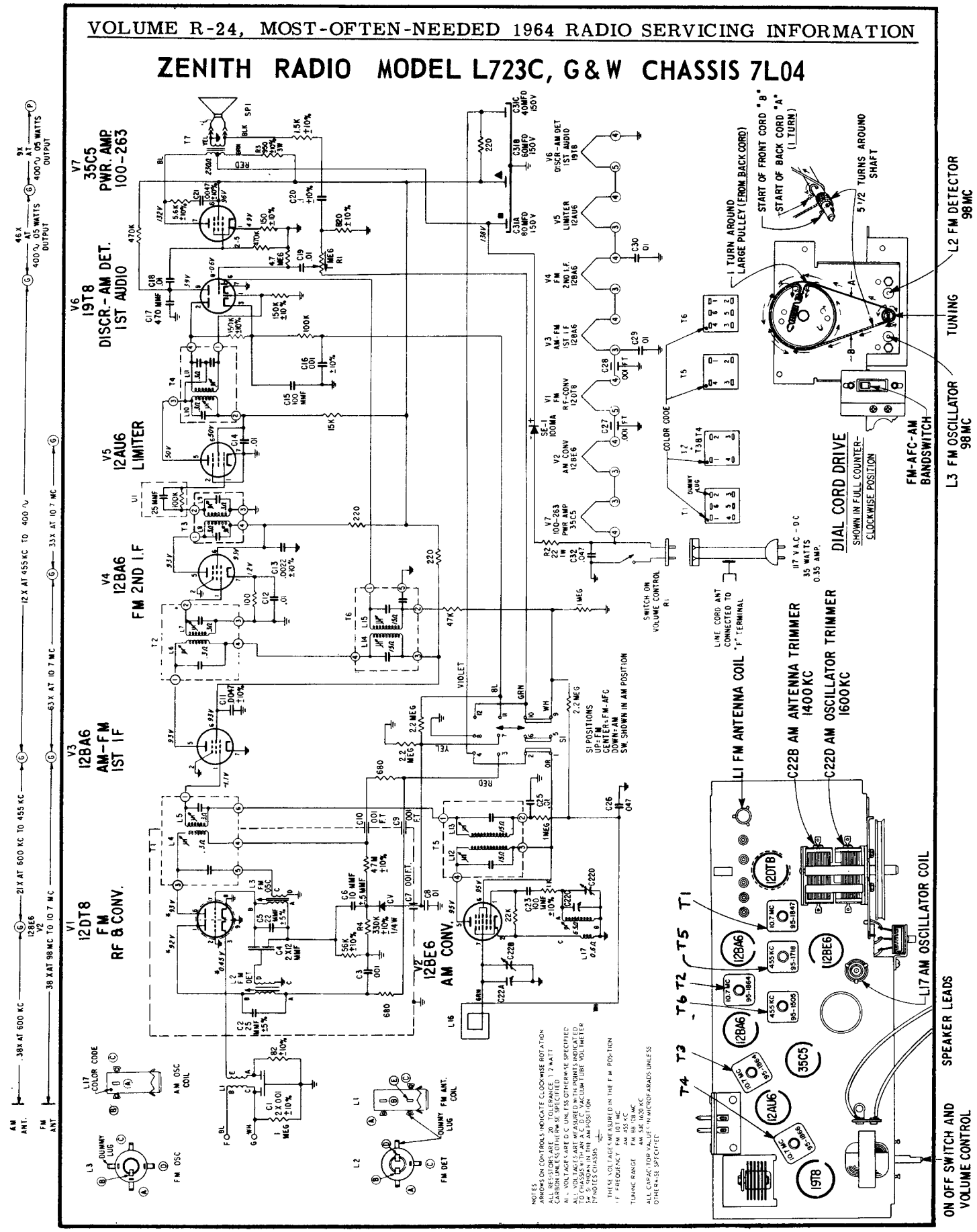

ZENITH 3L01 FOR MODELS SP401, MP401, ST1951, MT1951, MT1955, ST1959, SL2501 AND ML2601.

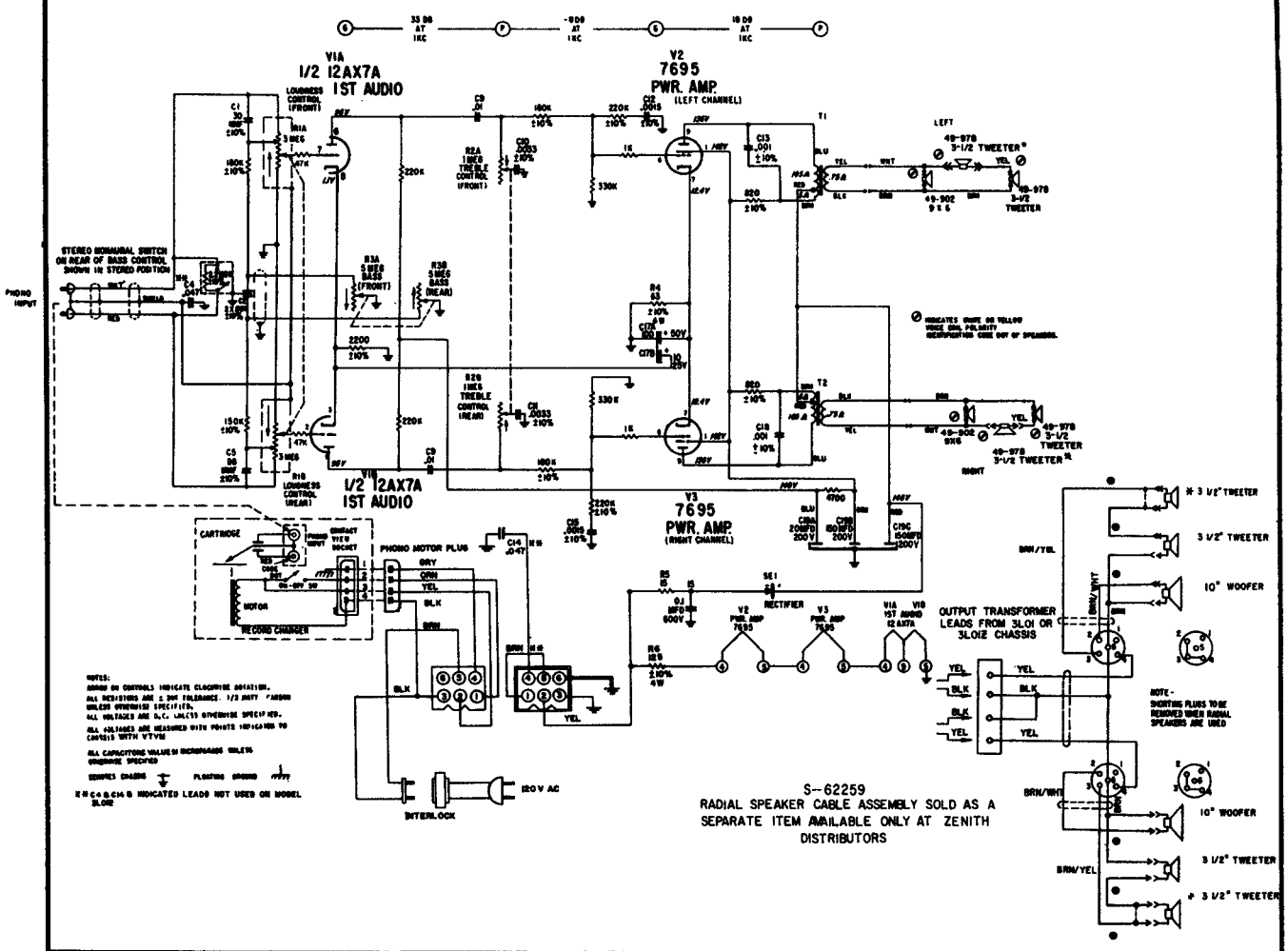

ZENITH Type 2L20 used in Models LPS45J, L

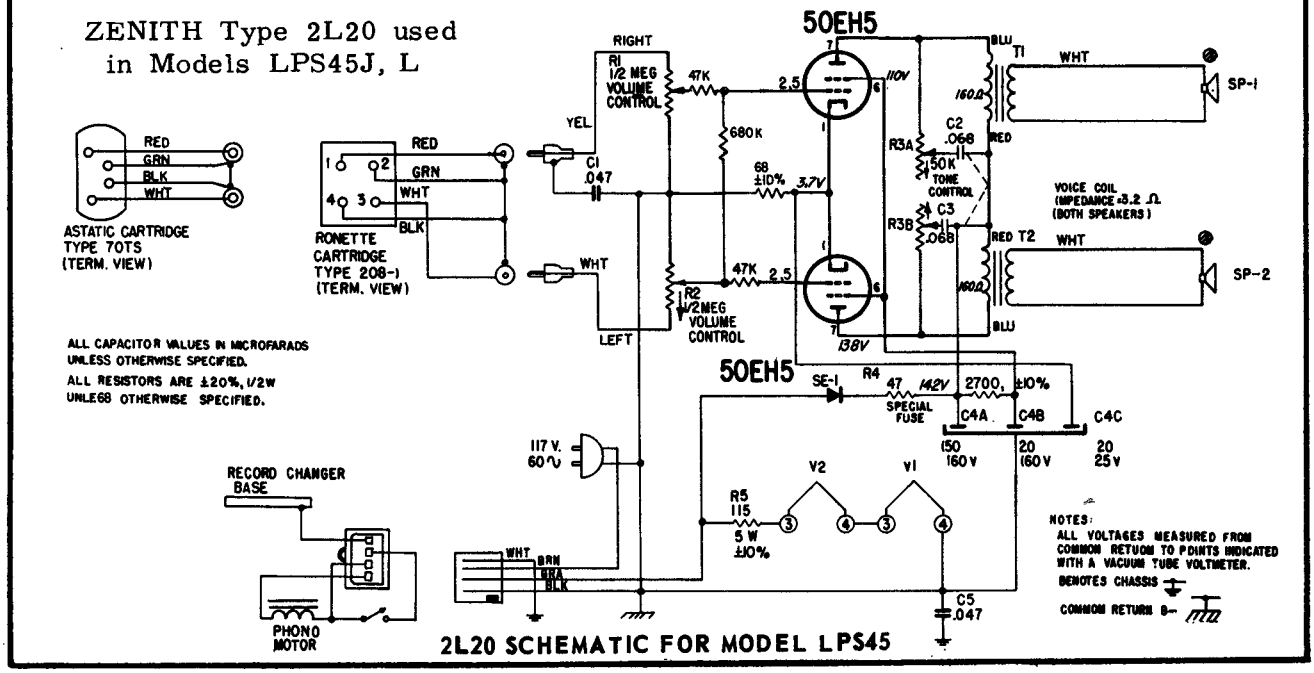

2L20 SCHEMATIC FOR MODEL LPS45

ZENITH 1L20 used in Models ZP2 types, and 1L21 used in Models LP8 types.

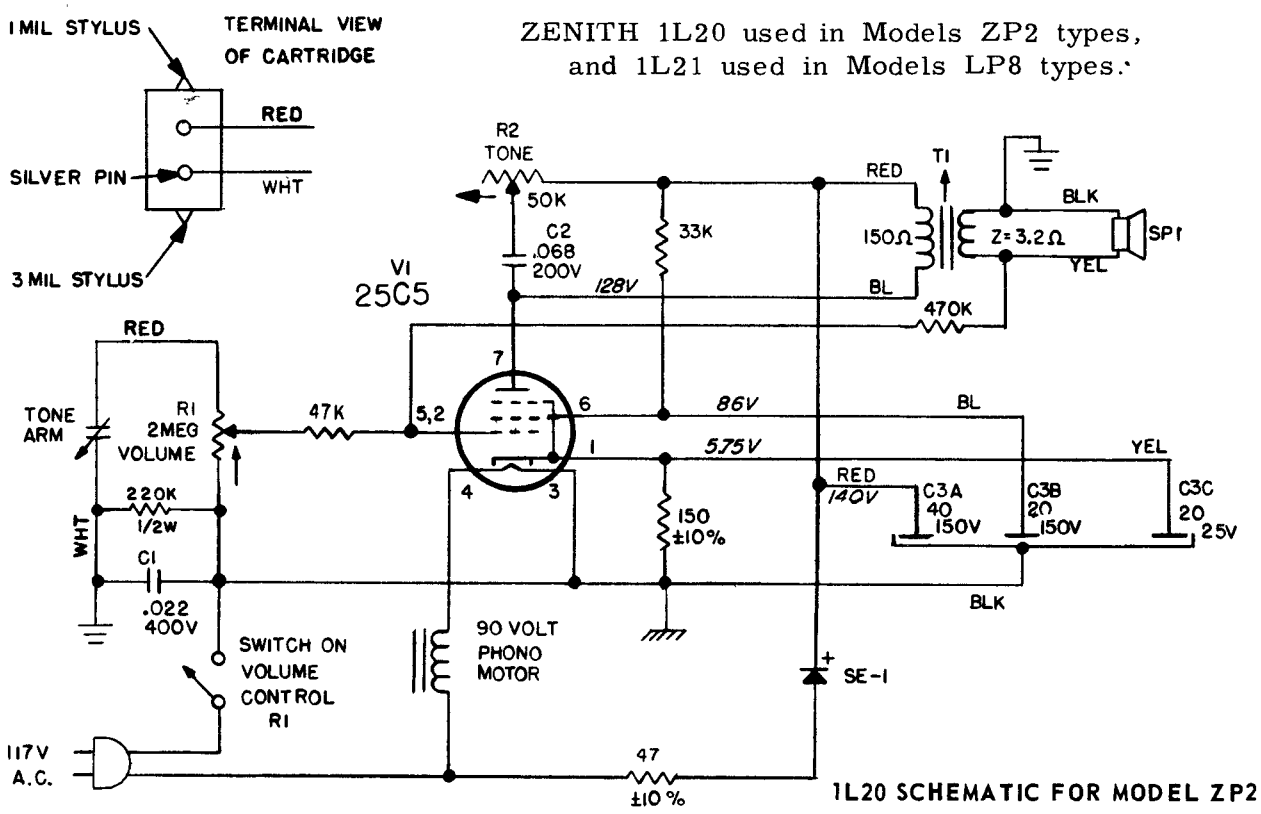

1L20 SCHEMATIC FOR MODEL ZP2

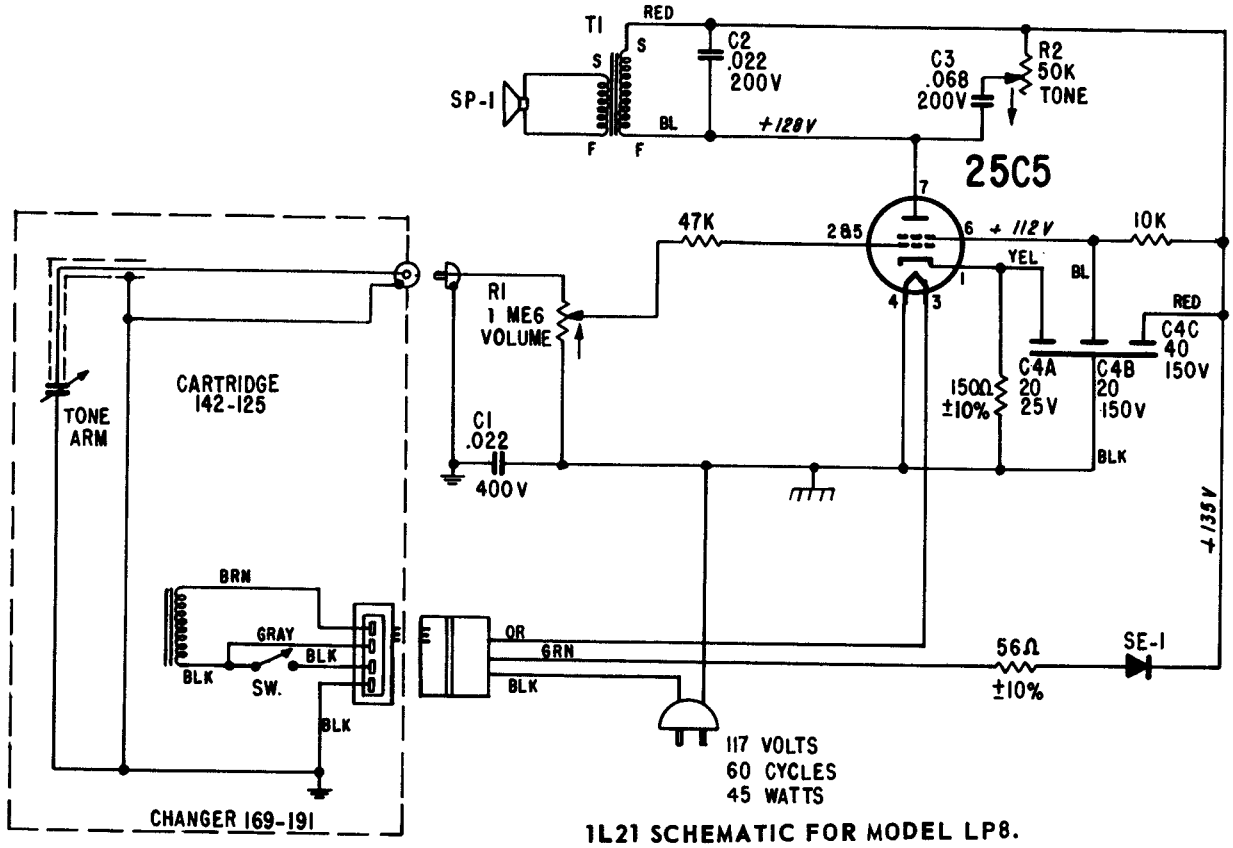

1L21 SCHEMATIC FOR MODEL LP8.

ZENITH 4L21 SCHEMATIC FOR MODELS ST1971, MT1971, ST1981, MT1981, ML2786 AND 7200.

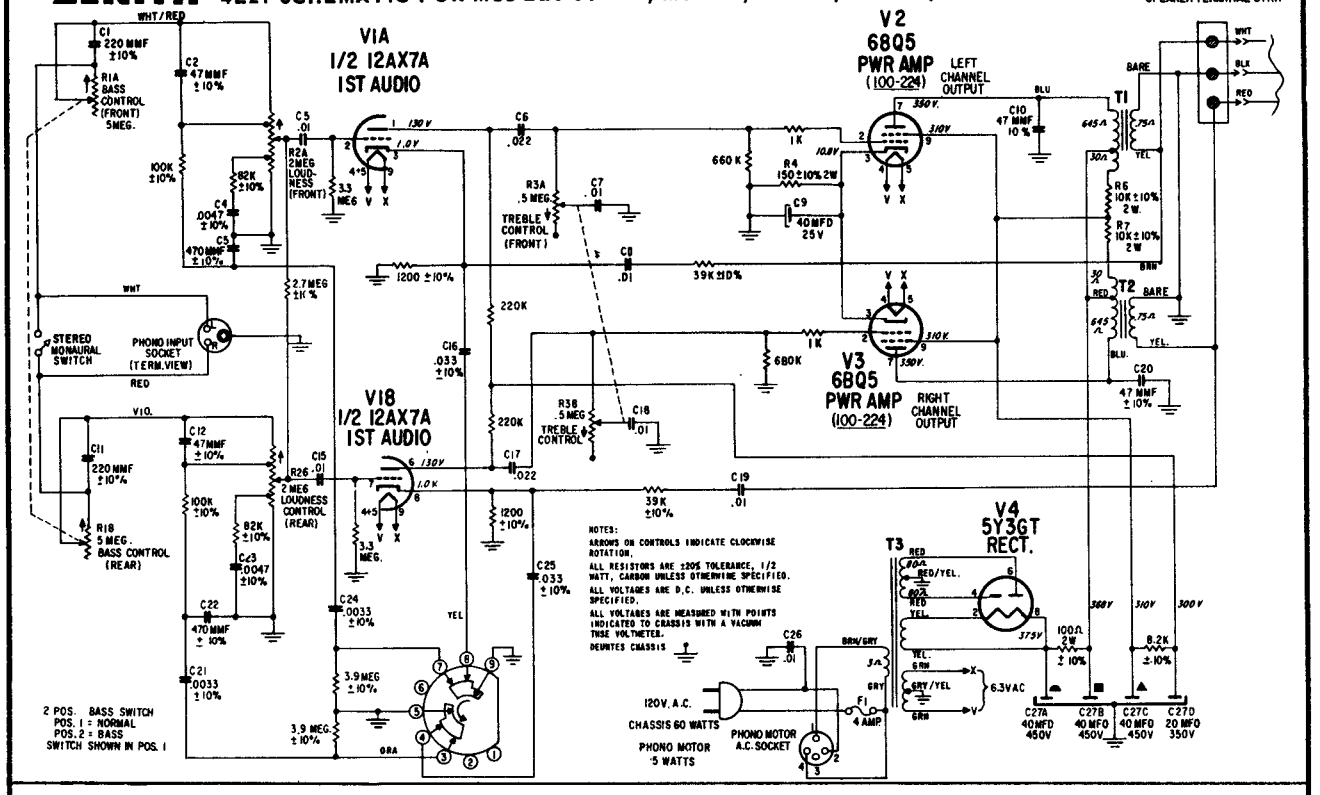

5L29 SCHEMATIC FOR MODELS SL2505, ML2605, ML2606, ML2607, ML2608, ML2610 AND ML2636.

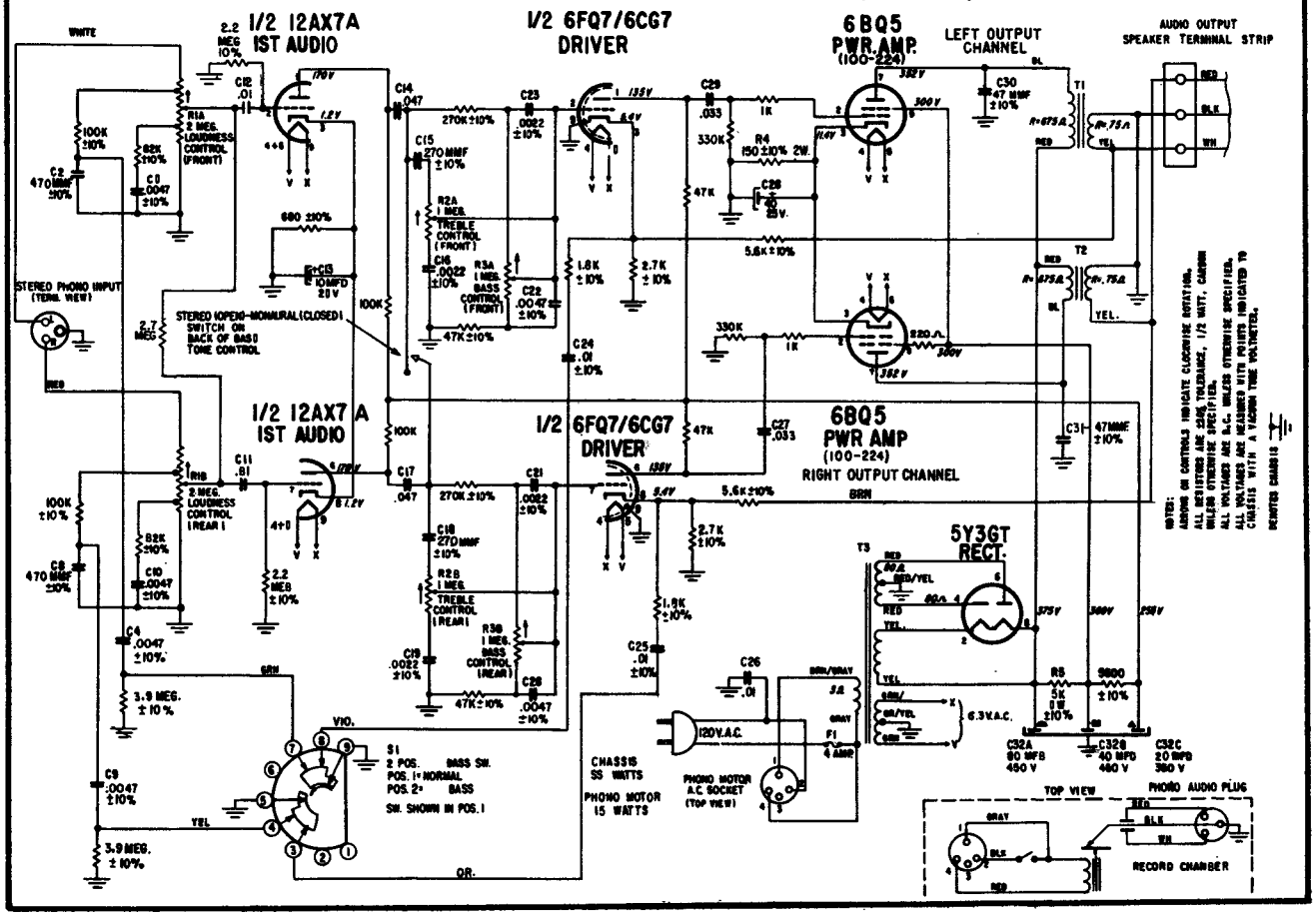

ZENITH

9L20 SCHEMATIC FOR MODELS ML2605, ML2606, ML2607, ML2608, ML2610, ML2636, ML2785, ML2786 AND 7200.

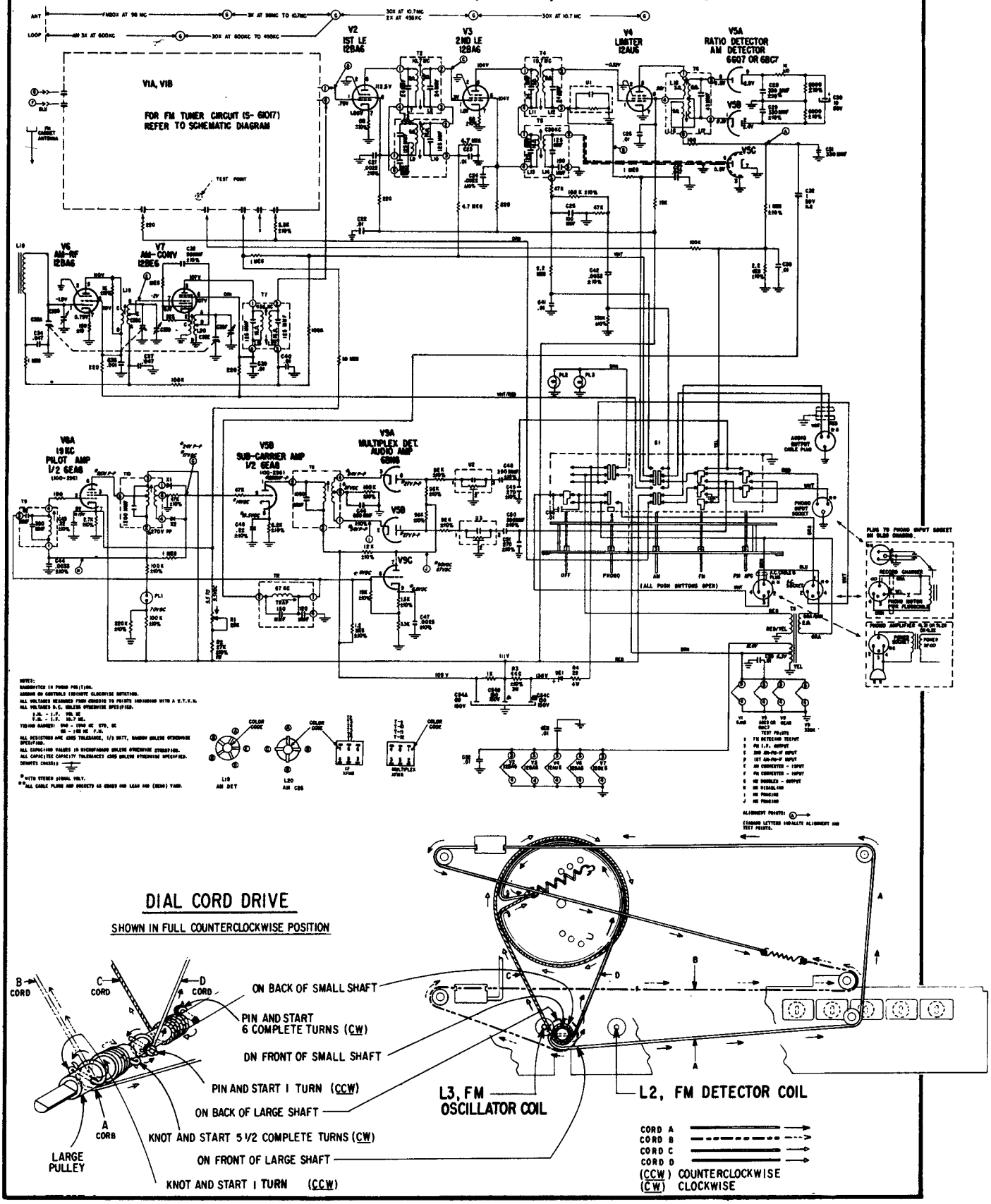

ZENITH

11L8T25 TUBE LAYOUT FOR MODELS ML2668, ML2670, ML2675, ML2685 AND 7500.

TEST POINTS	
A	1st FM LIMITER GRID
B	2nd FM-AM I.F. GRID
C	2nd FM LIMITER GRID
D	AM CONV. GRID
E	1st FM-AM-I.F. GRID
F	FM CONV. GRID
G	AM RF GRID
H	FM ANTENNA
J	RATIO DET. OUTPUT-67KC TRAP
K	MX, STEREO MONAURAL
L	19KC-DOUBLER
M	DET. COIL PEAK-PHASING
N	MX PHASING

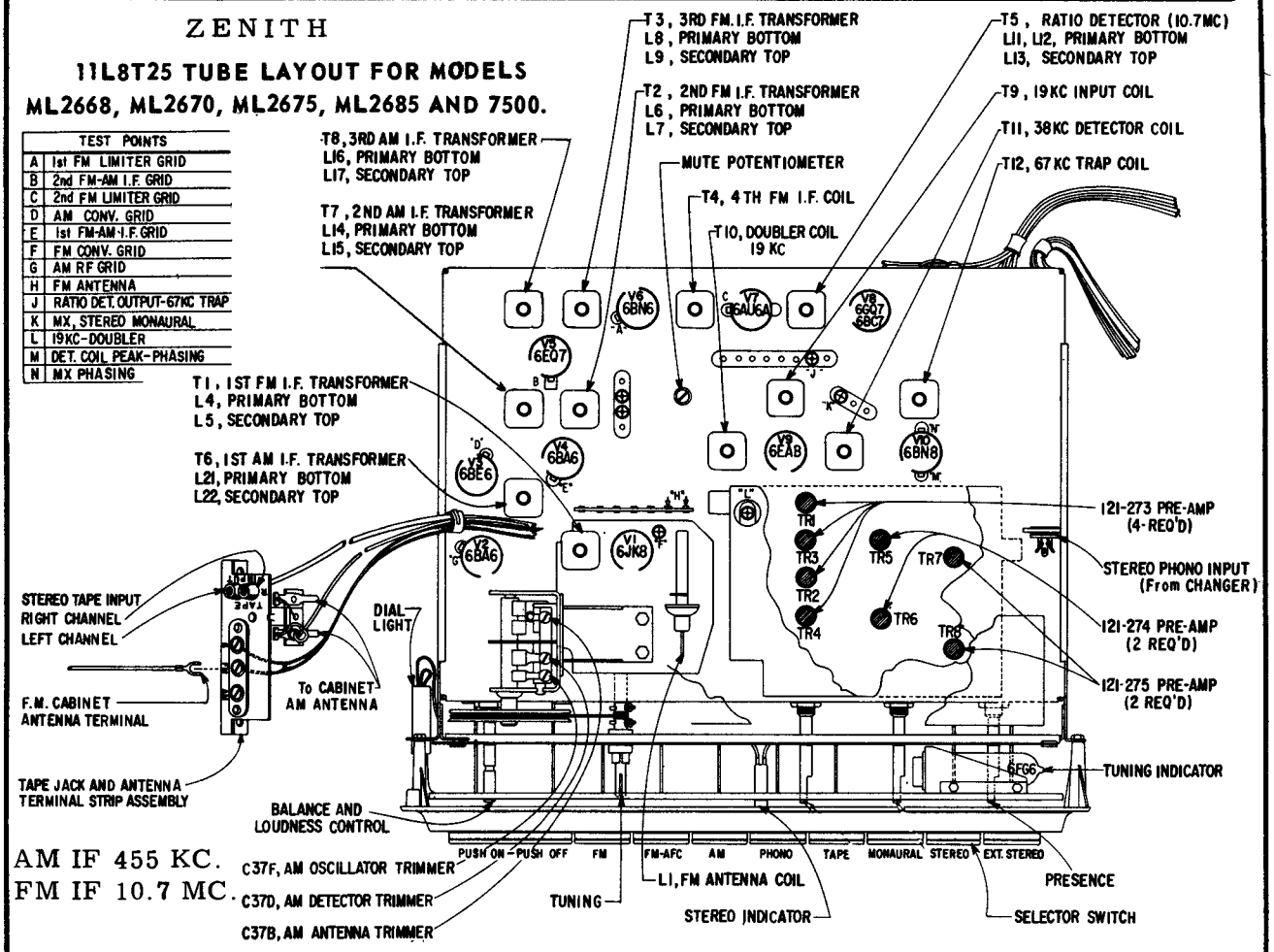

S-61017 AND S-61363 SCHEMATIC FOR FM TUNER USED ON CHASSIS 9L20 AND 11L8T25.

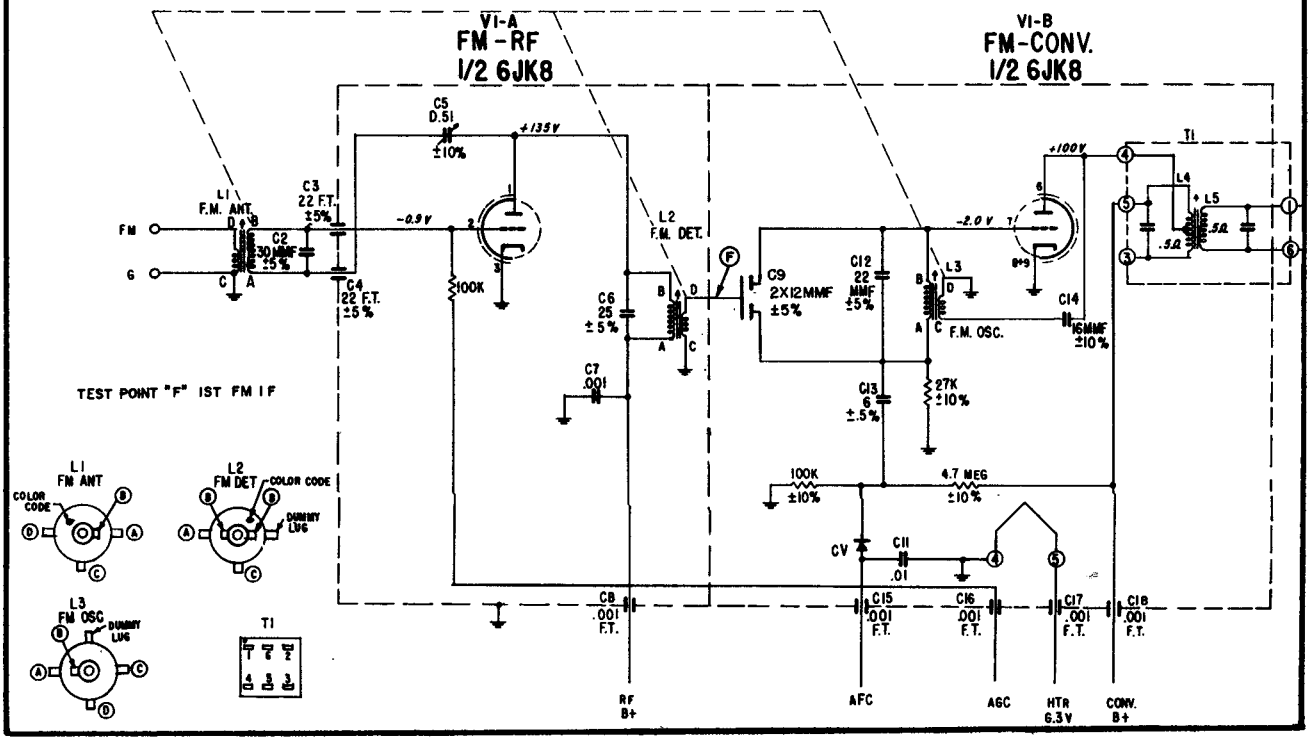

ZENITH **11L8T25 SCHEMATIC FOR MODELS ML2668, ML2670, ML2675, ML2685 AND 7500.**

(For chassis layout and FM tuner schematic see page 189)

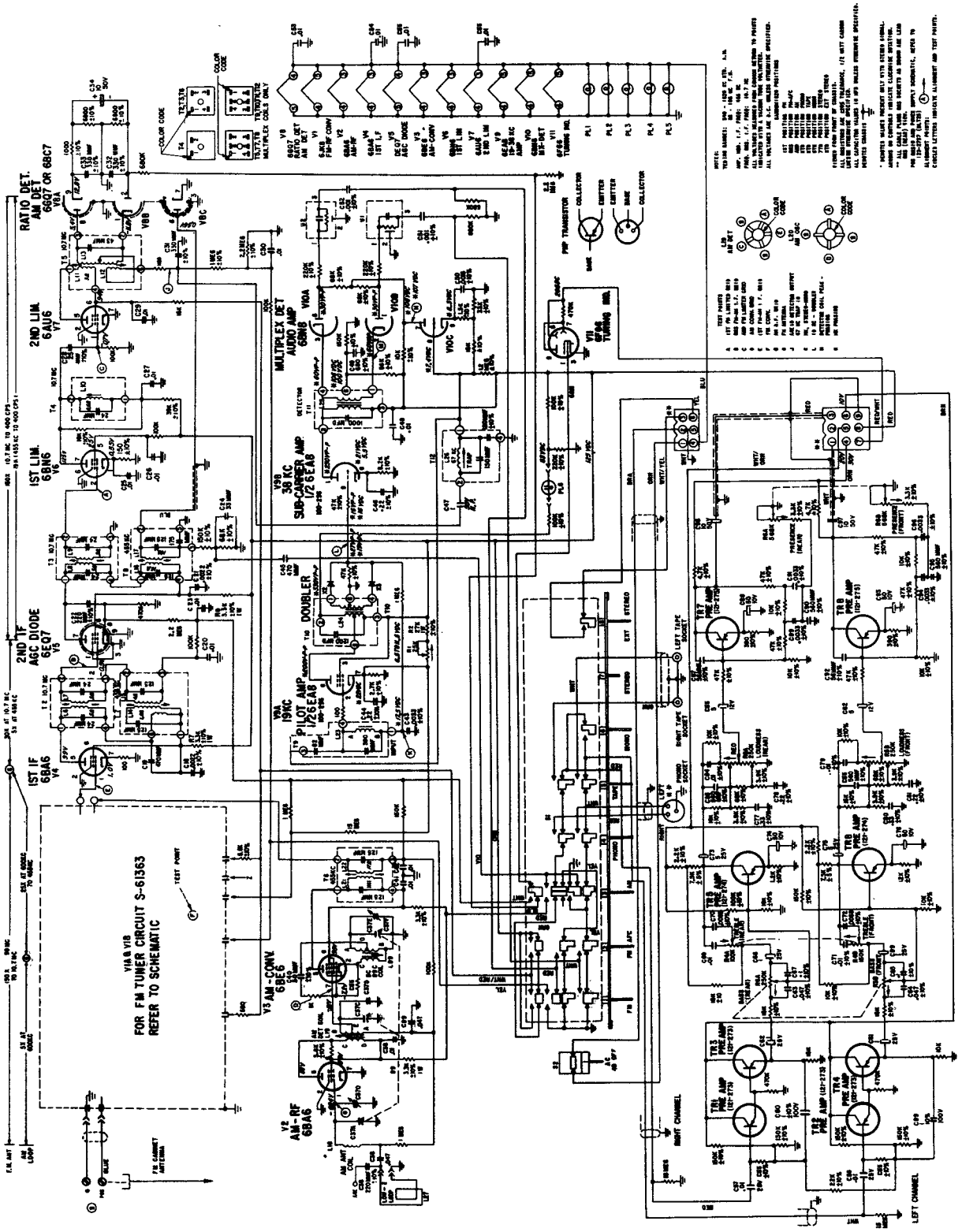

INDEX

Under each manufacturer's name, at left there are listed that make chassis and models in numerical order. The corresponding page number at right of each listing refers to the first page of the section dealing with such material.

(INDEX continued on page 192)

INDEX Continued