Most-Often-Needed

1963

Volume R-23

RADIO DIAGRAMS

and Servicing Information

Compiled by

M. N. BEITMAN

SUPREME PUBLICATIONS

Supreme Publications for Faster Radio-Television Repairs

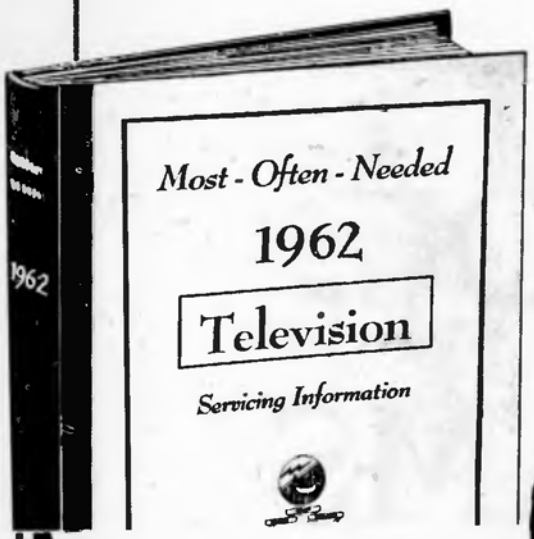

COVERS ALL POPULAR SETS

Here is your service data for faster, easier TV repairs. Lowest priced. Best by comparison. *Supreme* **TV** manuals have all needed service material on every popular TV set. Helpful, practical, factory-prepared data that will really make TV servicing easy for you. Benefit and save with these amazing values in service manuals. Only $3 per large volume. Used by 184,000 wise servicemen for faster repairs. Join them; begin to make TV repairs easily and quickly.

The repair of any TV set is simple with **Supreme Television** service manuals. Every set is covered in a practical manner to simplify trouble-shooting and repair. With this help find toughest faults in a jiffy. Most $3 TV volumes cover a whole year.

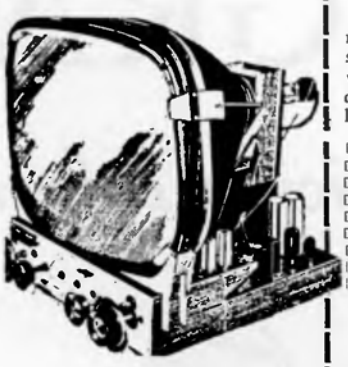

RADIO Manuals

Your best source for all needed RADIO diagrams and service data. Covers everything from most recent 1962 radios to pre-war old-timers; home radios, stereo, combinations, transistor portables, FM. Every manual has large schematics, all needed alignment facts, printed boards, voltages, trimmers, dial stringing, and hints. Volumes are big, 8½x11 inches, about 190 pages. See coupon at right for list of SUPREME popular radio service manuals ►

NO-RISK ORDER COUPON

TELEVISION SERVICE MANUALS

Supreme TV manuals are best for faster, easier TV repairs. Lowest priced. Factory data on practically all sets. Complete circuits, all needed alignment facts, wiring board views, waveforms, voltages, production changes, and double-page schematics. Only $3 per large annual manual. Check volumes wanted.

- ☐ New **Additional 1962 Television** Manual..... **$3.**
- ☐ **Early 1962 Television Servicing** Manual, only **$3.**
- ☐ **1961 TV** Manual, **$3.** ☐ **1960 TV** Manual, **$3.**
- ☐ **Additional 1959 TV, $3.** ☐ **Early 1959 TV, $3.**
- ☐ **1958 TV** Manual, **$3.** ☐ **Additional 1957 TV, $3.**
- ☐ **Early 1957 Television, $3.** ☐ **1956 TV** Manual, **$3.**
- ☐ **Additional 1955 TV, $3.** ☐ **Early 1955 TV, $3.**
- ☐ **1954 TV, $3.** ☐ **1953 TV, $3.** ☐ **1952 TV, $3.**
- ☐ **1951 TV, $3.** ☐ **Master Index** to all Manuals, **25¢**

RADIO DIAGRAM MANUALS

Here are low-priced radio manuals that simplify repairing. Cover everything from most recent 1962 radios to pre-war old-timers; home radios, stereo, combinations, transistor portables, FM, auto sets. Large schematics, all needed alignment facts, printed boards, voltages, dial stringing, hints. Volumes are big, 8½ x 11", about 190 pages, each.

$2.50

☐ **1962,** ☐ **1961,** ☐ **1960,** ☐ **1959,** ☐ **1958,** ☐ **1957,**
☐ **1956,** ☐ **1955,** ☐ **1954,** ☐ **1953,** ☐ **1952,** ☐ **1951,**
☐ **1950,** ☐ **1949,** ☐ **1948,** ☐ **1947.** ☐ **1946,** ☐ **1942,**
☐ **1941,** ☐ **1940,** ☐ **1926-36** **PRICE EACH, $2.50**

SUPREME PUBLICATIONS

1760 Balsam Road Highland Park, ILL.

Rush today **TV** and **Radio** manuals checked in no-risk order form of this ad. Send postpaid. I am enclosing full price. You guarantee my complete satisfaction or my money back.

Name: _____

Address: _____

City: _____ State: _____

ADMIRAL

7N2, 7N2A Tuner, 3PA7 Amplifier

Used in Models Y4461, A, Y4462, A, Y4463, A, Y4481, A, Y4482, A, Y4483, A, and Y4499, A.

Service material on pages 3 through 5

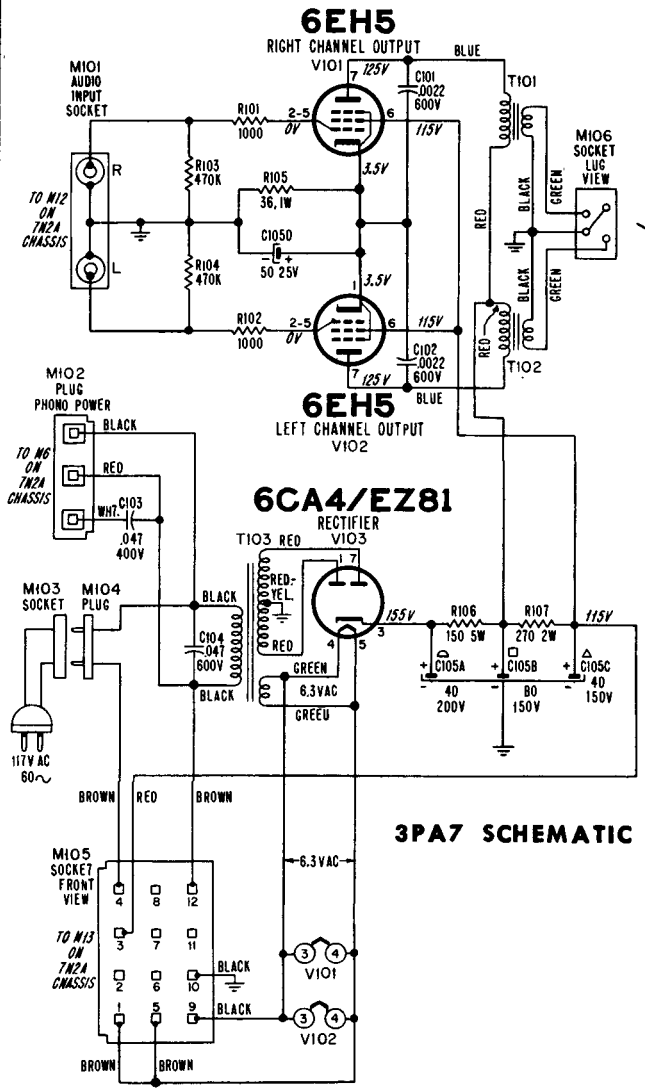

3PA7 SCHEMATIC

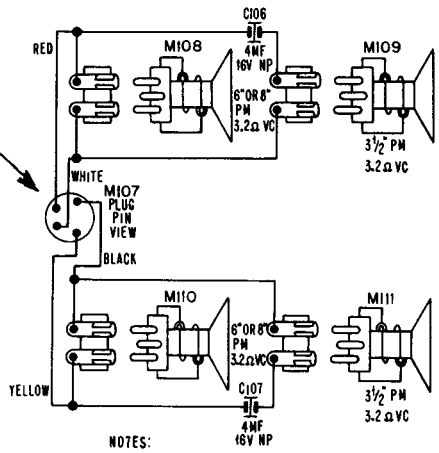

NOTES:
1. ALL VOLTAGES TAKEN WITH TUNER CONNECTED ±10%
2. RED DOT SPEAKER TERMINAL SHOWN AS SOLID LINE.

DIAL STRINGING PROCEDURE

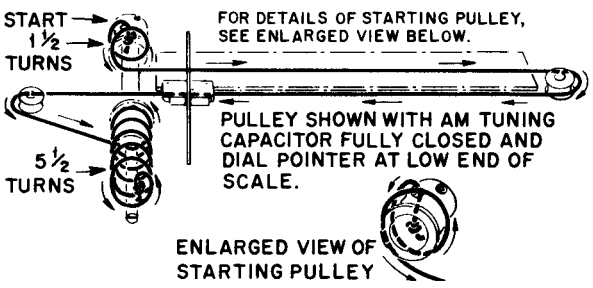

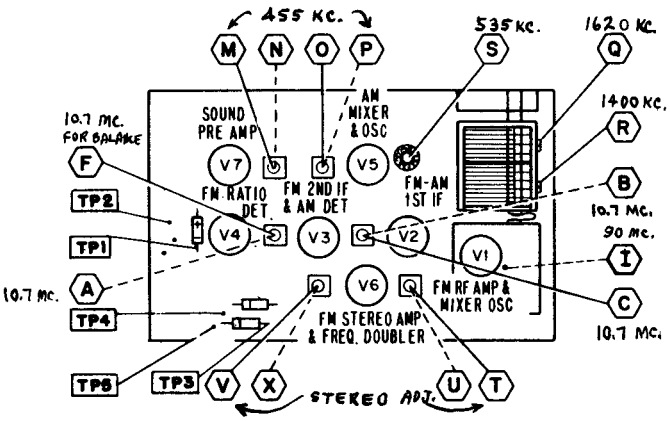

TOP VIEW OF 7N2A CHASSIS

ADJUSTMENTS INDICATED BY DASHED LINES ARE UNDER CHASSIS

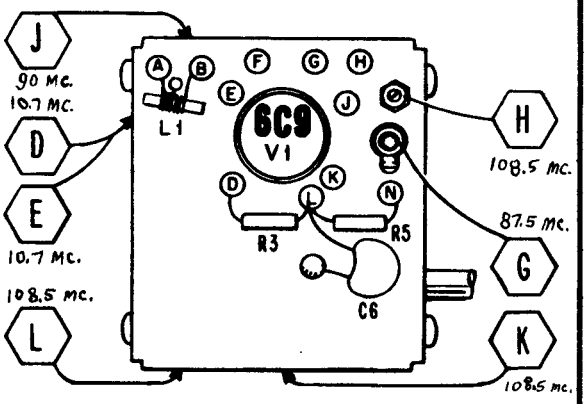

TOP VIEW OF FM TUNER SHOWING ALIGNMENT LOCATIONS

(D) is located at rear of tuner.
(E) is accessible through hole for (D). (E) is the slug nearest the escutcheon.
(I) is accessible through a hole in the bottom of the chassis (See chassis layout at left).

ADMIRAL Model 7N2A FM-AM Stereo Radio Tuner

(Diagram across pages 4 and 5, other data page 3)

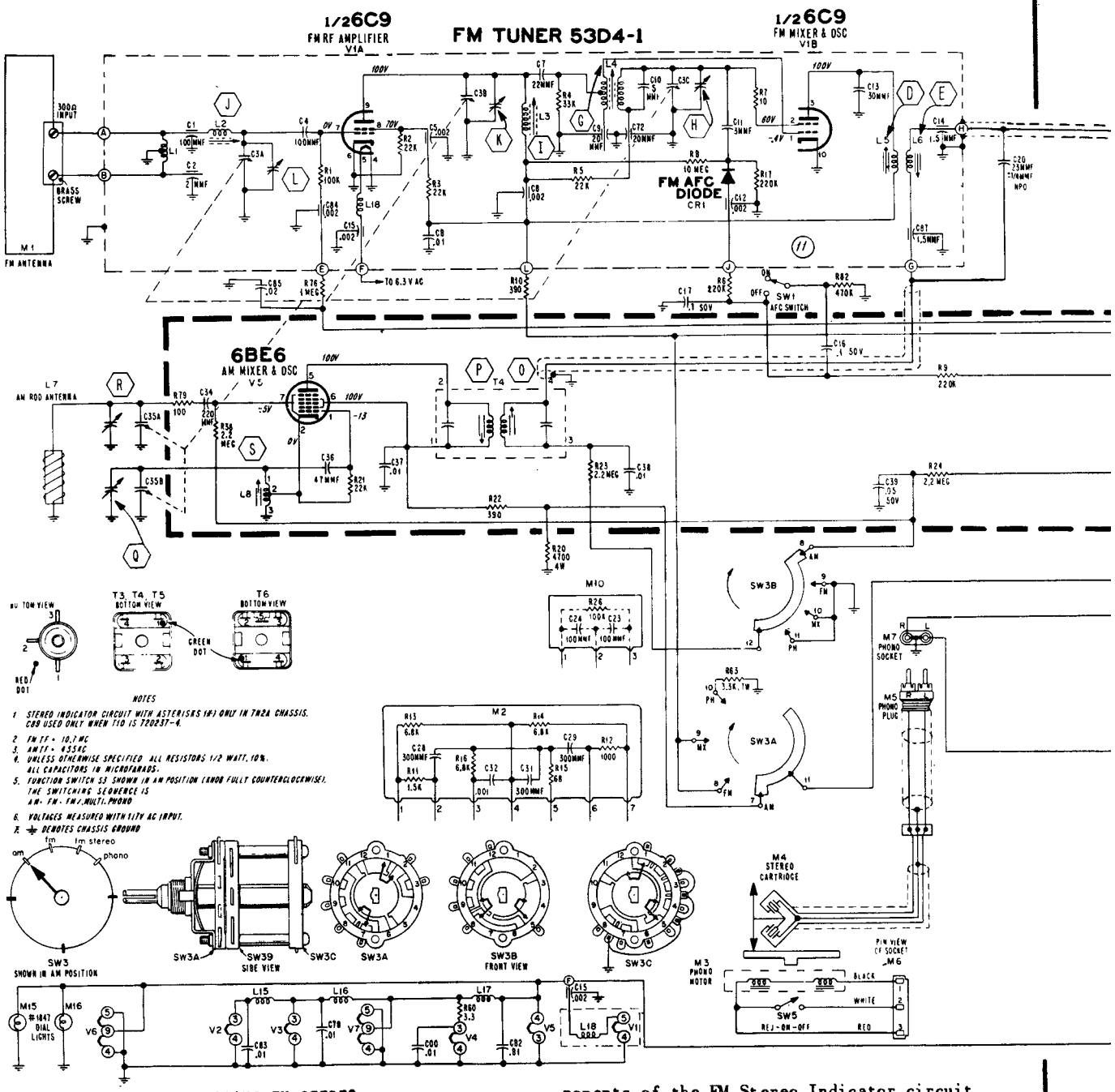

SERVICING FM STEREO

Trouble shooting can be accomplished by making voltage measurements without a signal. Signal tracing is possible with an oscilloscope and an FM stereo generator applying a pilot signal to the antenna. Signal tracing is also possible by injecting a 19KC CW signal at pin 7 of V6A.

7N2 SCHEMATIC

The 7N2A schematic shown above can be used for servicing the 7N2 chassis if you will note the following exceptions: the 7N2 does not have transistor Q1, stereo indicator lamp M14, rectifier CR4 and other associated wiring and components of the FM Stereo Indicator circuit.

Addition of the FM Stereo Indicator circuit to the 7N2 chassis is not recommended.

7N2A SCHEMATIC NOTES

1. Stereo indicator circuit with asterisks (*) only in 7N2A chassis. C89 used only when T10 is 72D237-4.
2. Unless otherwise specified: all resistors ½ watt, 10%, all capacitors in microfarads.
3. All voltages measured with 117V AC input.

ADMIRAL Model 7N2A FM-AM Stereo Radio Tuner
(Diagram across pages 4 and 5, other data page 3)

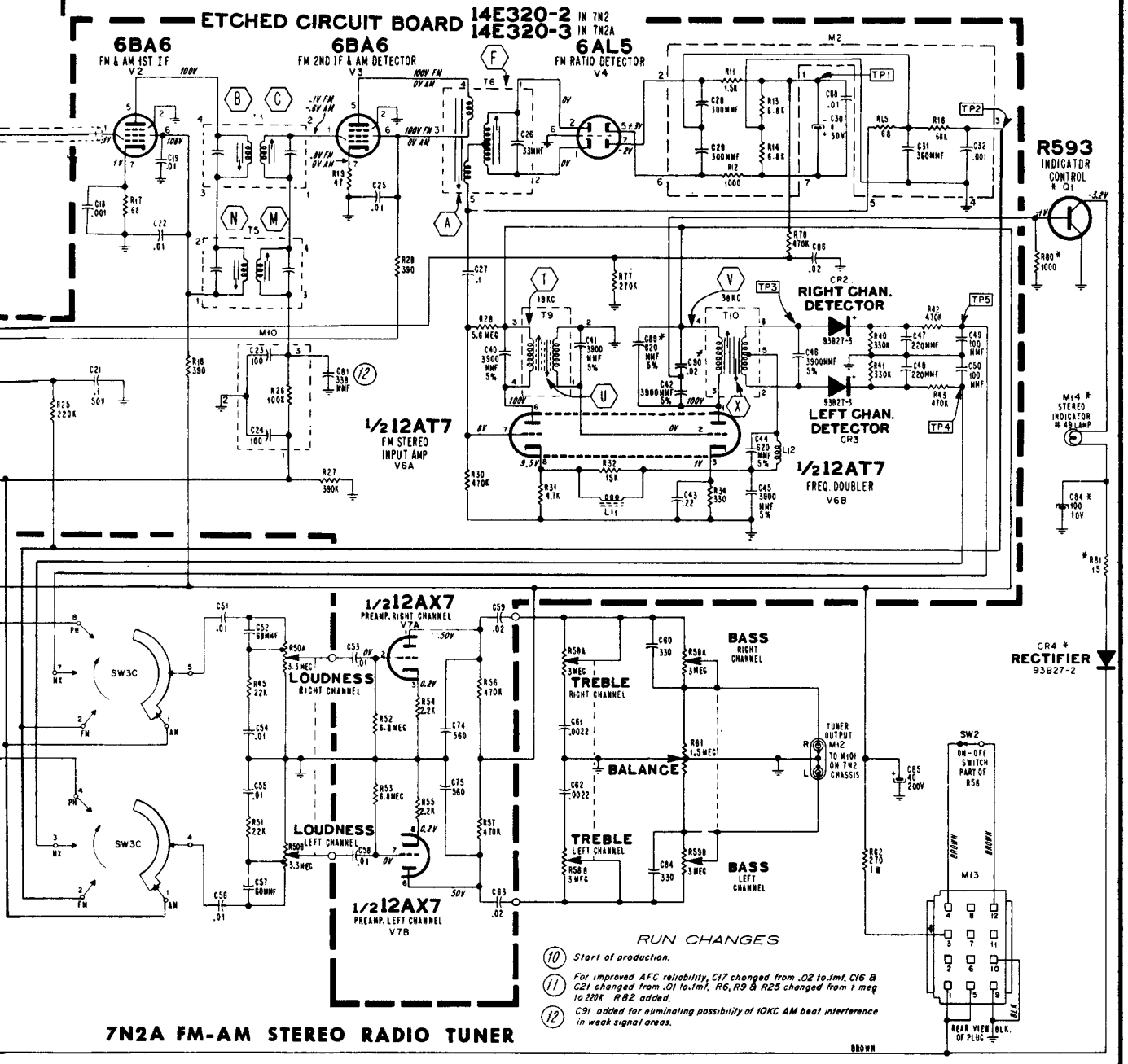

4. Function switch, S3, shown in AM position (knob fully clockwise). The switching sequence is AM - FM - FM Stereo - Phono.

5. ⏚ denotes chassis ground.

RUN NUMBER CHANGES

7N2 chassis are not stamped with run numbers. 7N2A chassis were stamped RUN 10 at the start of production.

The following changes were made at RUN 11 for improved AFC reliability:

C17 was changed from .02 to .1 mf, 50V ceramic.

C16 and C21 were changed from .01 to .1 mf, 50V ceramic.

R6, R9 and R25 were changed from 1 megohm to 220,000 ohms, ½ watt.

R82, 470,000 ohms, ½ watt was added.

The following change was made at RUN 12 to eliminate possibility of 10KC AM beat interference in weak signal areas:

Added C91, 330 mmf ceramic disc.

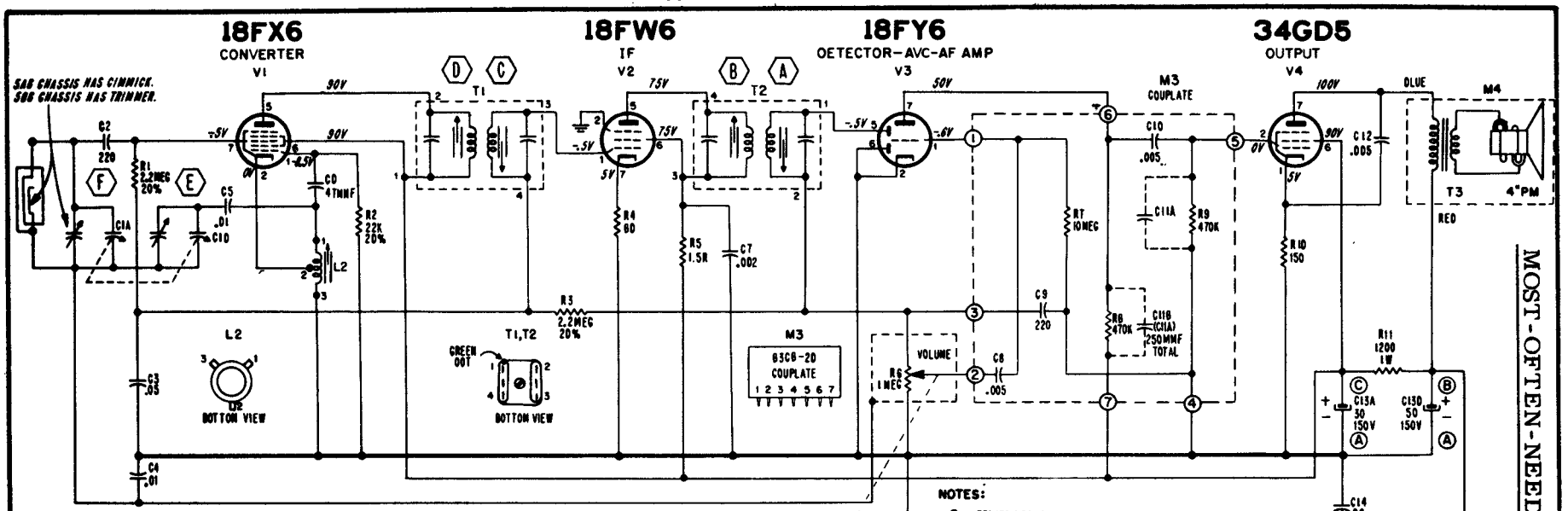

All readings made between tube socket terminals and common ground.

All voltages measured with vacuum-tube voltmeter.

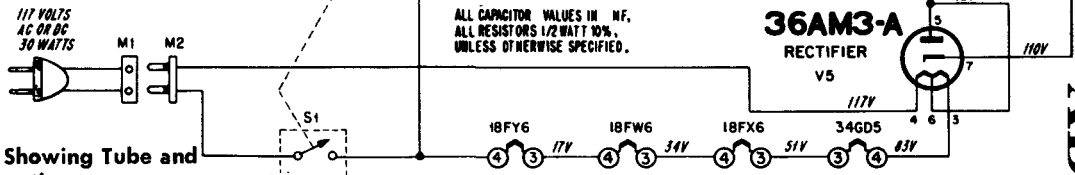

NOTES:

ETCHED CIRCUIT GROUND

ALL VOLTAGES TAKEN WITH VTVM, AT 117V LINE, NO SIGNAL INPUT. ALL VOLTAGES ± 10%.

ALL CAPACITOR VALUES IN MF. ALL RESISTORS 1/2 WATT 10%, UNLESS OTHERWISE SPECIFIED.

1400 Kc. F* E 1620 Kc.

Top View of Chassis Showing Tube and Alignment Points Locations.

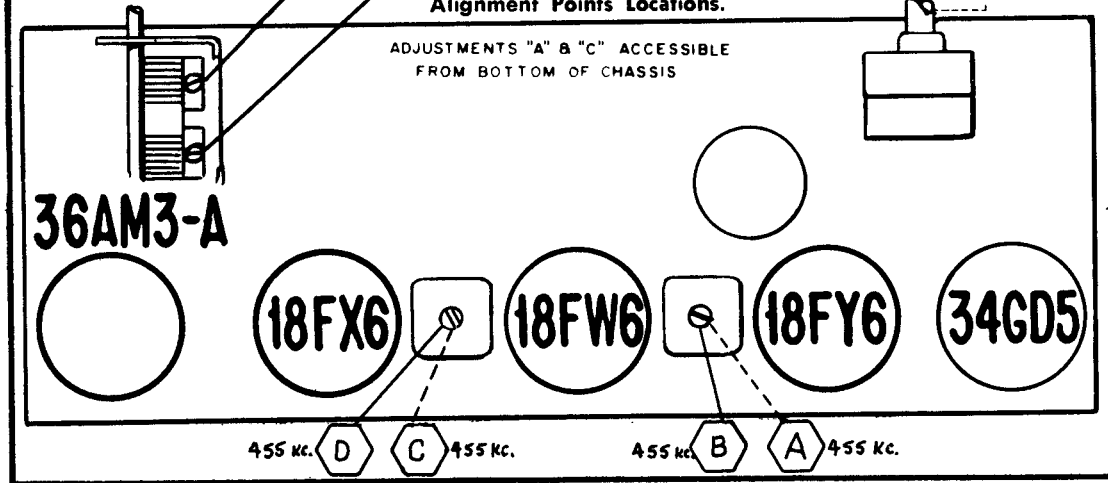

CHASSIS REMOVAL

Models Y3100, Y3104, Y3107 and Y3109 Only

One chassis mounting screw is accessible only after removing the tuning knob. The other is accessible after removing the cabinet back.

The cabinet back is held in four slots in the cabinet so is easily removed without the use of tools.

In Models Y3012A, Y3016A, and Y3019A Only, the cabinet is removed as shown in figure

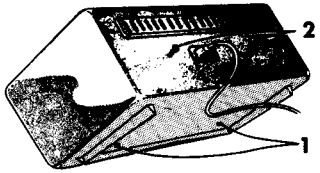

LOOSEN THESE SCREWS UNTIL HELD ONLY BY LAST THREADS THEN PUSH AGAINST SCREWS WITH THUMBS. REMOVE SCREWS AFTER CHASSIS SLIDES FORWARD

REMOVE THESE SCREWS

*FOR CHASSIS WITHOUT TRIMMER "F" ADJUST GIMMICK ON LOOP ANT.

TO REMOVE CHASSIS FOR SERVICING TUBES

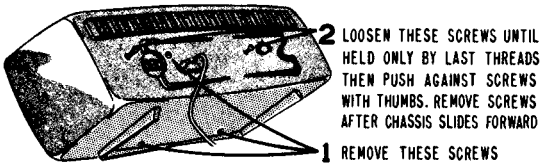

Figure 2. Rear View of Cabinet Showing Chassis Mounting Screws.

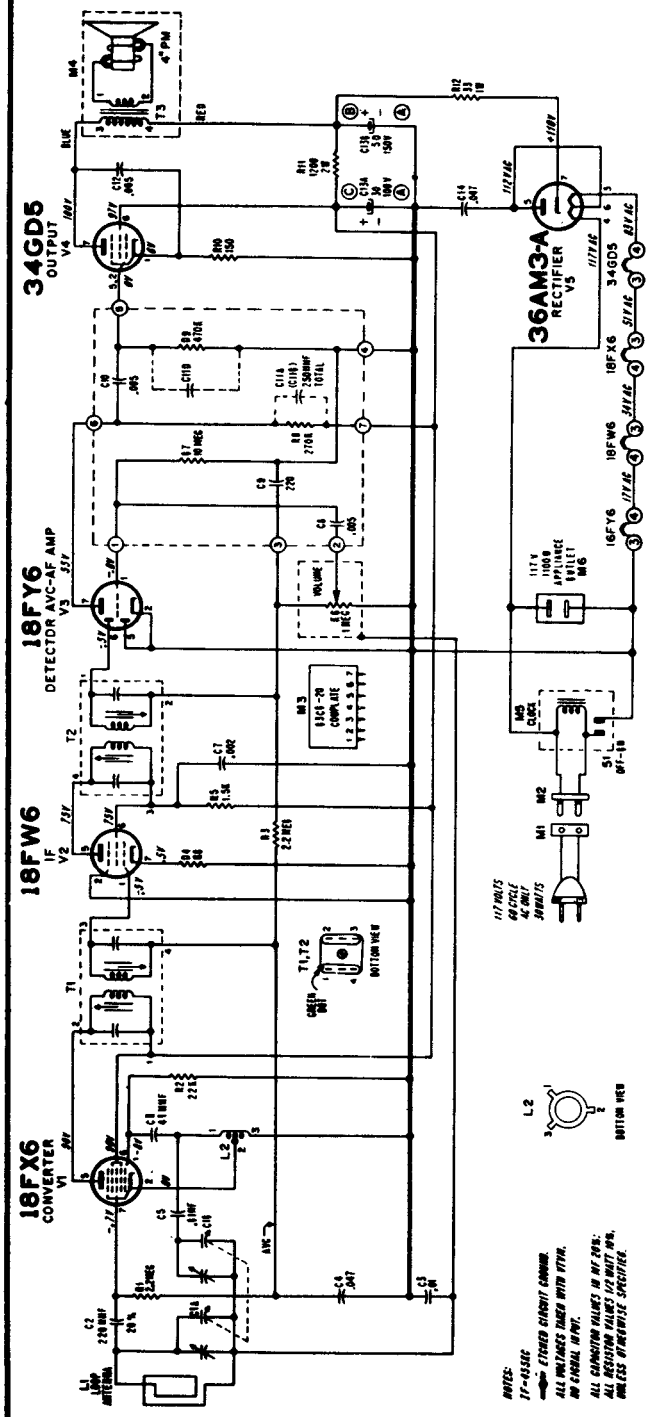

ADMIRAL

CHASSIS 5F6
MODELS Y3051A-Y3053A Y3058A

CHASSIS REMOVAL

1. Tilt cabinet forward and remove the two screws located on the bottom of cabinet. Also remove the center screw on the back. (The one just above the line cord socket.) See Figure 2.
2. Loosen the two screws remaining at the back until held only by their last threads. Apply enough pressure to these loosened screws with the thumbs, to break the AC interlock Connection inside the cabinet.
3. Remove screws completely and allow chassis, with attached front panel, to slide forward. Make certain that the Time Set Knob at the rear clears the hole provided in the cabinet back.

REMOVING THE CLOCK

1. Remove the cabinet (rear section) as instructed under Chassis Removal.
2. Remove the two knobs from the front and the four pushbuttons by pulling them straight off.
3. Remove the front crystal by pushing inward and then outward on the tabs located along the top and bottom edges. Remove the tuning and volume indicator discs.
4. Remove screw under tuning dial indicator.
5. Remove two screws holding volume control to cabinet front.
6. Remove two screws holding antenna brackets to cabinet front.
7. Remove the two nuts mounting the clock to the front panel. The clock is removable through front, after unsoldering leads.

GENERAL

When the radio is "off," pushing the SLEEP button will cause the radio to play from 10 minutes up to an hour depending upon the number of times the knob is pushed; once for 10 minutes, twice for 30 minutes, 3 times for 45 minutes and 4 times for 1 hour. The fifth time is a neutral position that cancels any previous setting.

"SNOOZE ALARM"—When the buzzer alarm starts, it is possible to catch 40 winks more sleep by simply pushing down the SLEEP button. The buzzer will then be silent for a period of approximately 10 minutes for one push of the button, 30 minutes for two, 45 minutes for three, 60 minutes for four. *Note*: The fifth push is a neutral position which cancels the previous setting and turns the buzzer back "on".

ADMIRAL

MODEL	CHASSIS
Y2231 Y2231GPS	6M3C
Y2232 Y2232GPS	
Y2238 Y2238GPS	
Y2301GP Y2301GPS	6M3D
Y2303GP Y2303GPS	
Y2307GP Y2307GPS	
Y2223A	6M3E

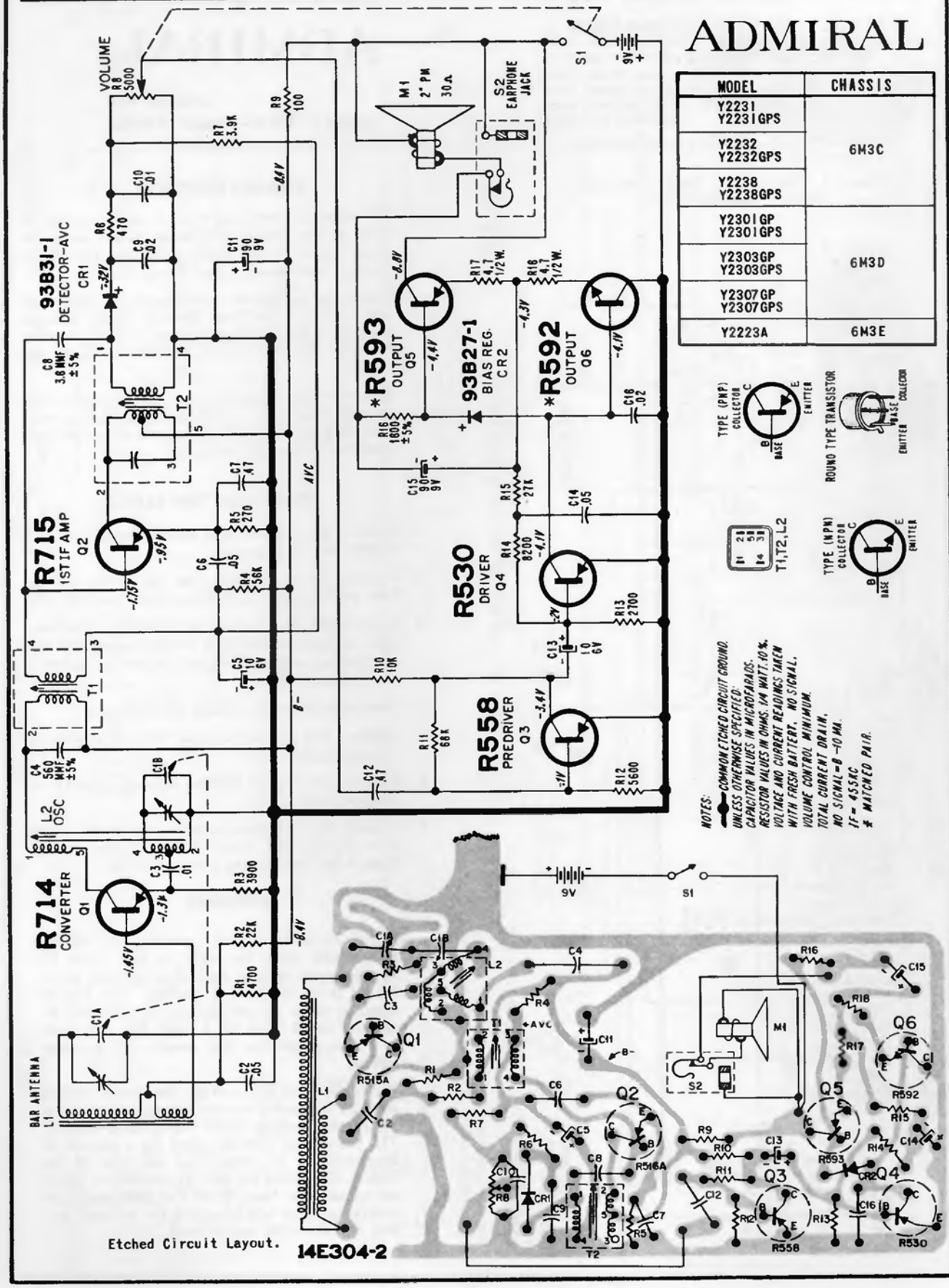

Etched Circuit Layout.

ADMIRAL

CHASSIS 6N3
MODEL Y3203

FREQUENCY RANGE: AM 535 KC to 1600 KC
FM 88 MC to 108 MC

INTERMEDIATE FREQUENCY: AM 455 KC
FM 10.7 MC

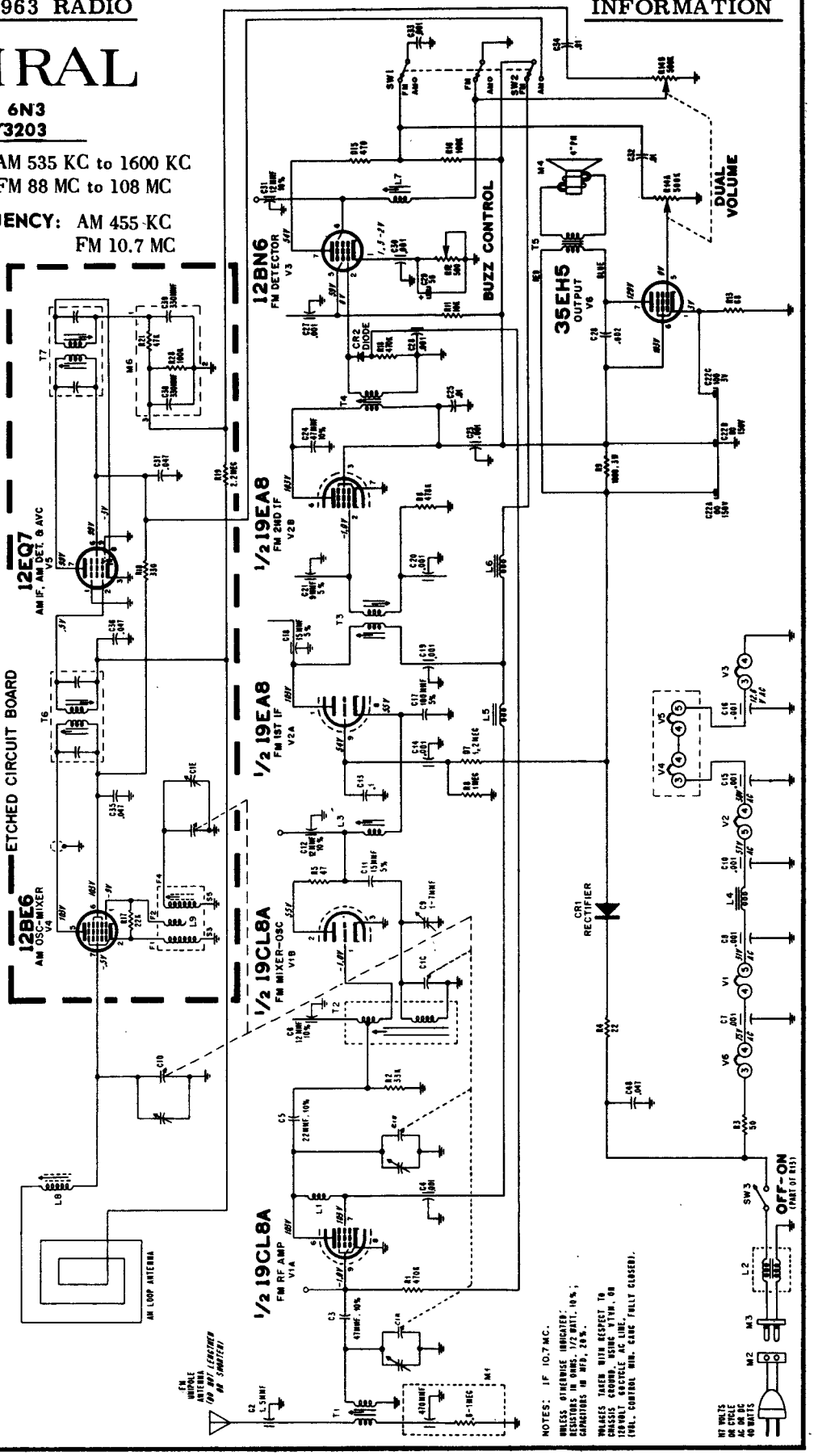

CHASSIS REMOVAL

To remove the chassis from the cabinet it is necessary to remove only the rear cabinet section, since the front panel and knobs are attached to the chassis.

1. Remove two screws from the back of cabinet.
2. Remove two screws from the bottom of cabinet.
3. Turn set bottom side up and using a screw driver, force chassis forward by pushing on the front panel section visible through the elongated chassis mounting holes. A small elevation is provided on the section of the panel inside this slot for this purpose. After the AC interlock connection has been broken, the chassis with front panel attached will slide forward easily and out of the rear section.

When replacing chassis into the cabinet rear, first thread the unipole antenna lead into the small hole provided in the rear of the cabinet.

ADMIRAL

CHASSIS 6V3, MODELS Y2332, Y2333, Y2338

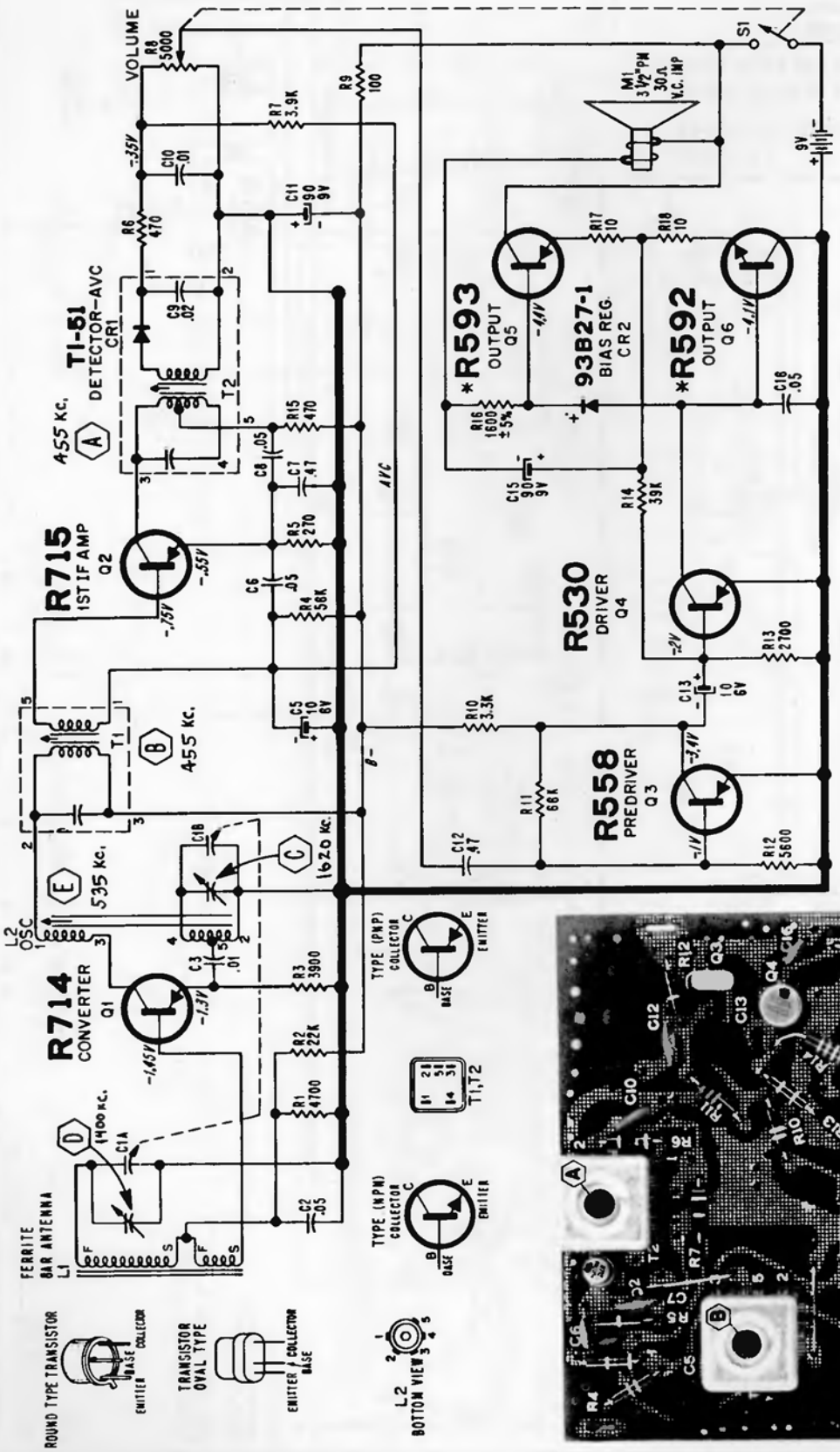

TOP VIEW OF ETCHED CIRCUIT BOARD SHOWING ALIGNMENT POINTS.

(C) AND (D) TRIMMERS ON GANG CAPACITOR

ADMIRAL

CHASSIS	MODEL
7K2	Y2311
	Y2312
	Y2319

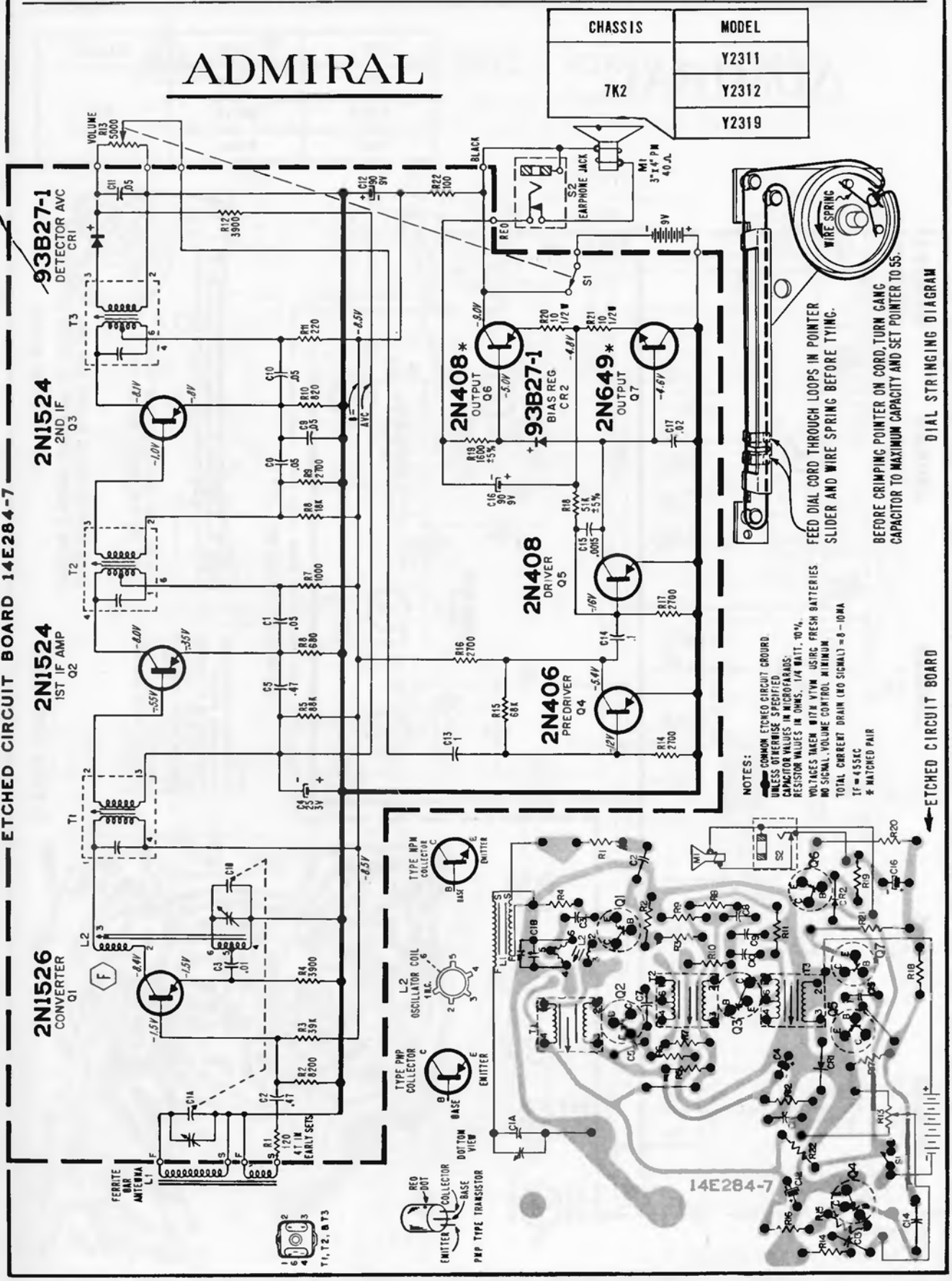

ADMIRAL

MODEL	COLOR	CHASSIS
Y2321	Black	BF2
Y2323	White	
Y2327	Brown	

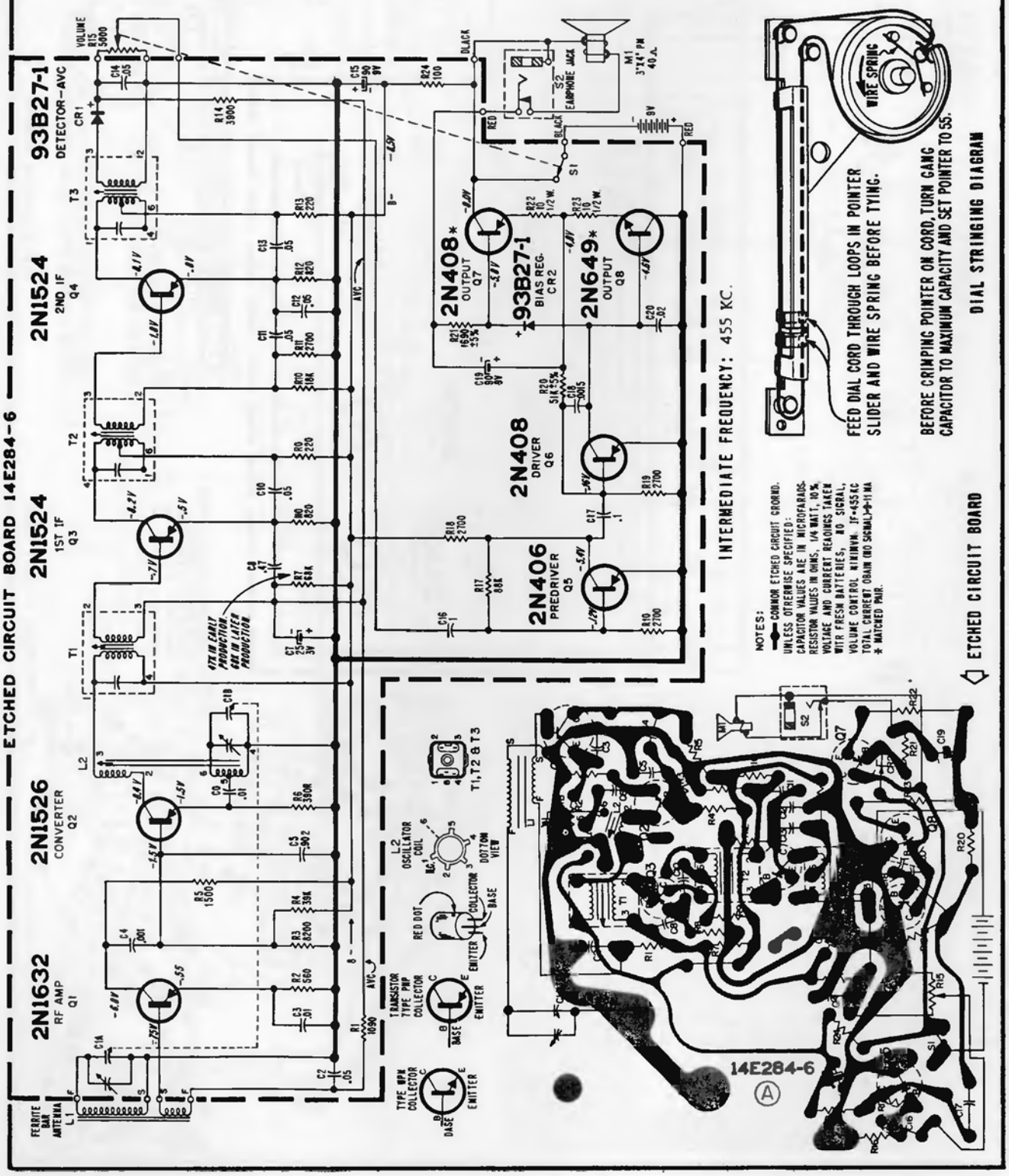

Arvin MODELS 42R25 — 42R29

Model 42R77 is electrically identical and has in addition Appliance Outlets.
Model 42R63 has Outlets, omits Clock, and is electrically identical in circuitry.

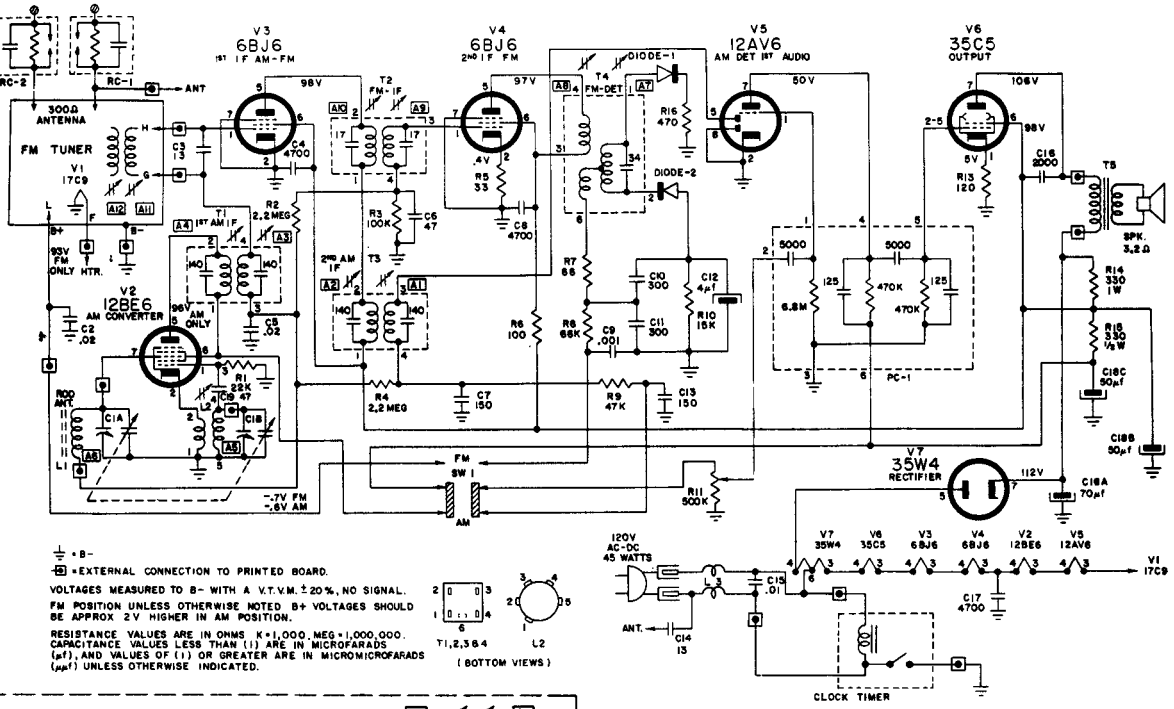

AM I.F. 455 KC.
FM I.F. 10.7 MC.

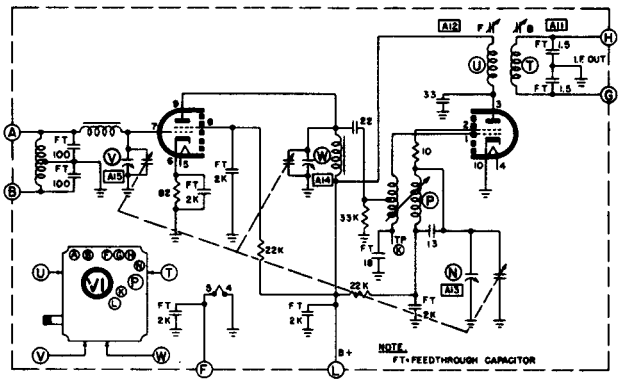

TUNER SCHEMATIC

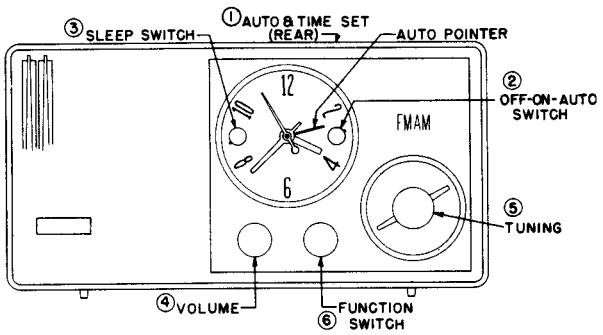

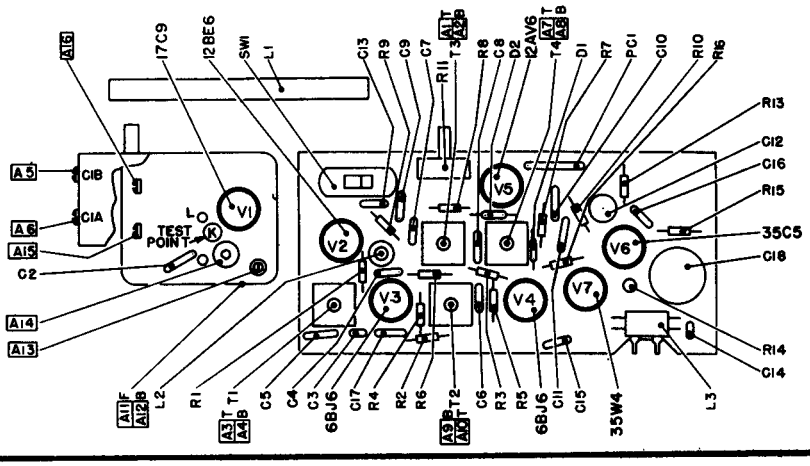

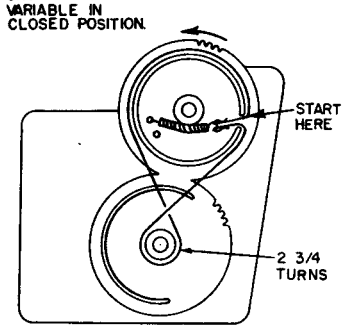

STRINGING DIAGRAM

Arvin MODEL 62R09 CODE 1. 66601

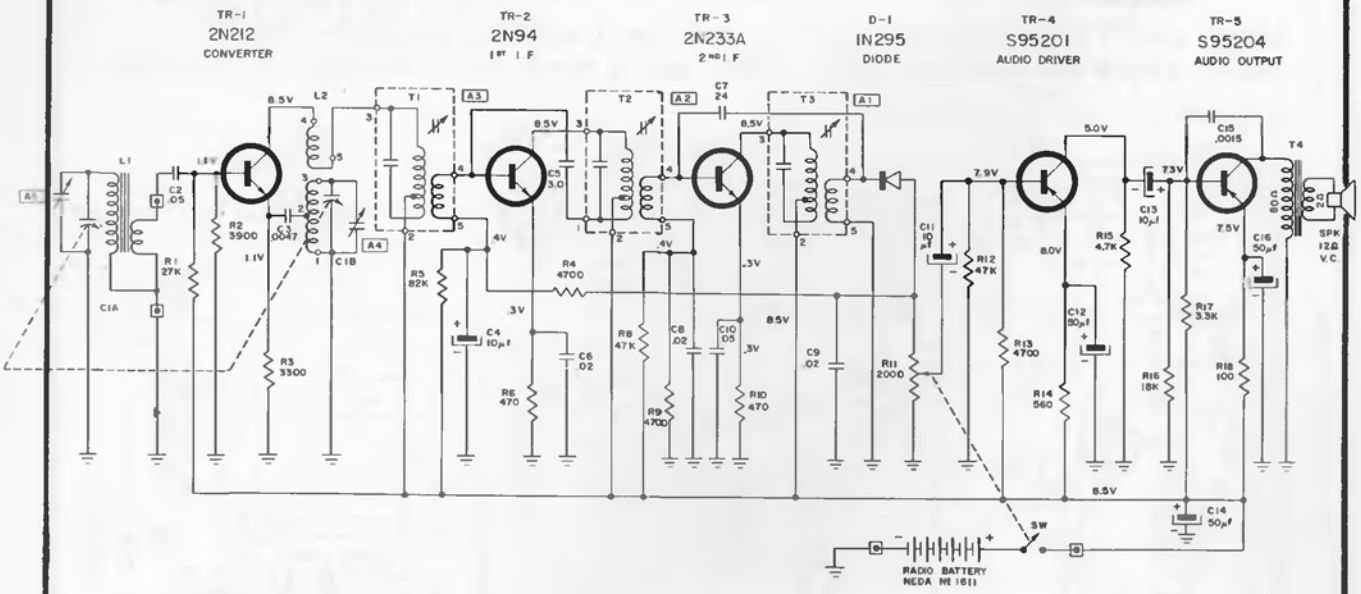

CAPACITANCE VALUES LESS THAN 1.0 ARE IN MICROFARADS (μf), AND VALUES GREATER THAN 1.0 ARE IN MICRO-MICROFARADS (μμf) EXCEPT WHERE NOTED.

VOLTAGE READINGS TO COMMON GROUND ARE MEASURED WITH VACUUM TUBE VOLTMETER UNDER NO SIGNAL CONDITIONS WITH TUNING CAPACITOR CLOSED AND VOLUME CONTROL AT MAXIMUM CLOCKWISE ROTATION.

RESISTANCE VALUES ARE IN OHMS; K=1000.

⏚ = COMMON GROUND SYMBOL.

⊡ = EXTERNAL CONNECTION TO PRINTED CIRCUIT.

TOTAL BATTERY CURRENT DRAIN UNDER NO SIGNAL CONDITIONS, 10 TO 16 MA.

I.F. TRANSFORMER & OSCILLATOR COIL (BOTTOM VIEW)

SIGNAL TEST POINTS	TEST FREQUENCY	SERIES CAPACITOR TO GENERATOR	INPUT FOR 5 MW OUTPUT (.25V ACROSS 12Ω)
TR-3 BASE	455 KC	.05 μf	500 μV
TR-2 BASE	455 KC	.05 μf	50 μV
TR-1 BASE	455 KC	.05 μf	2 μV
STANDARD LOOP	1000 KC	STANDARD LOOP	200 μV / M

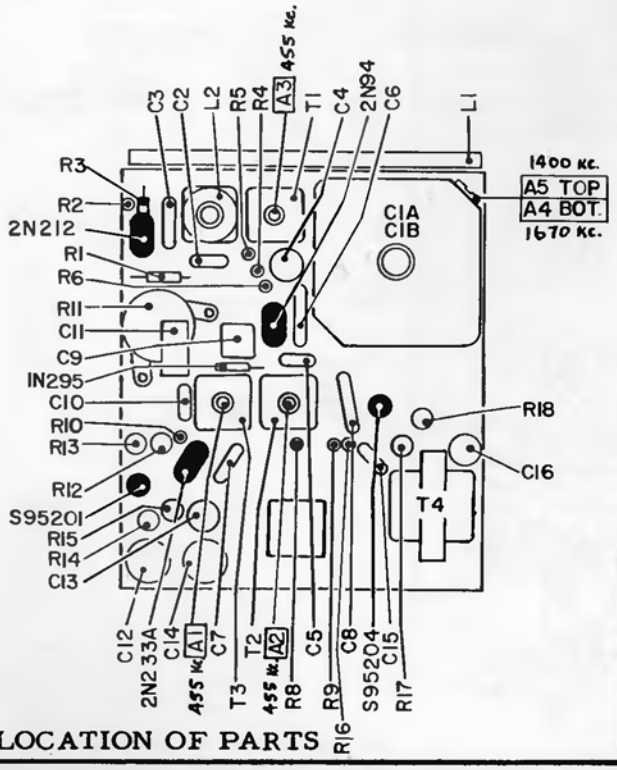

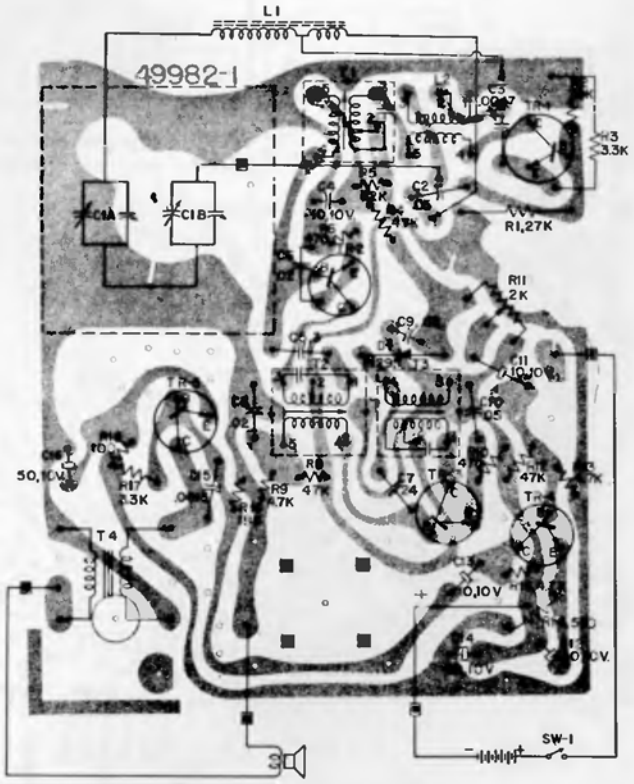

LOCATION OF PARTS

Arvin

MODELS 62R48 62R49

CODE 1. 66401

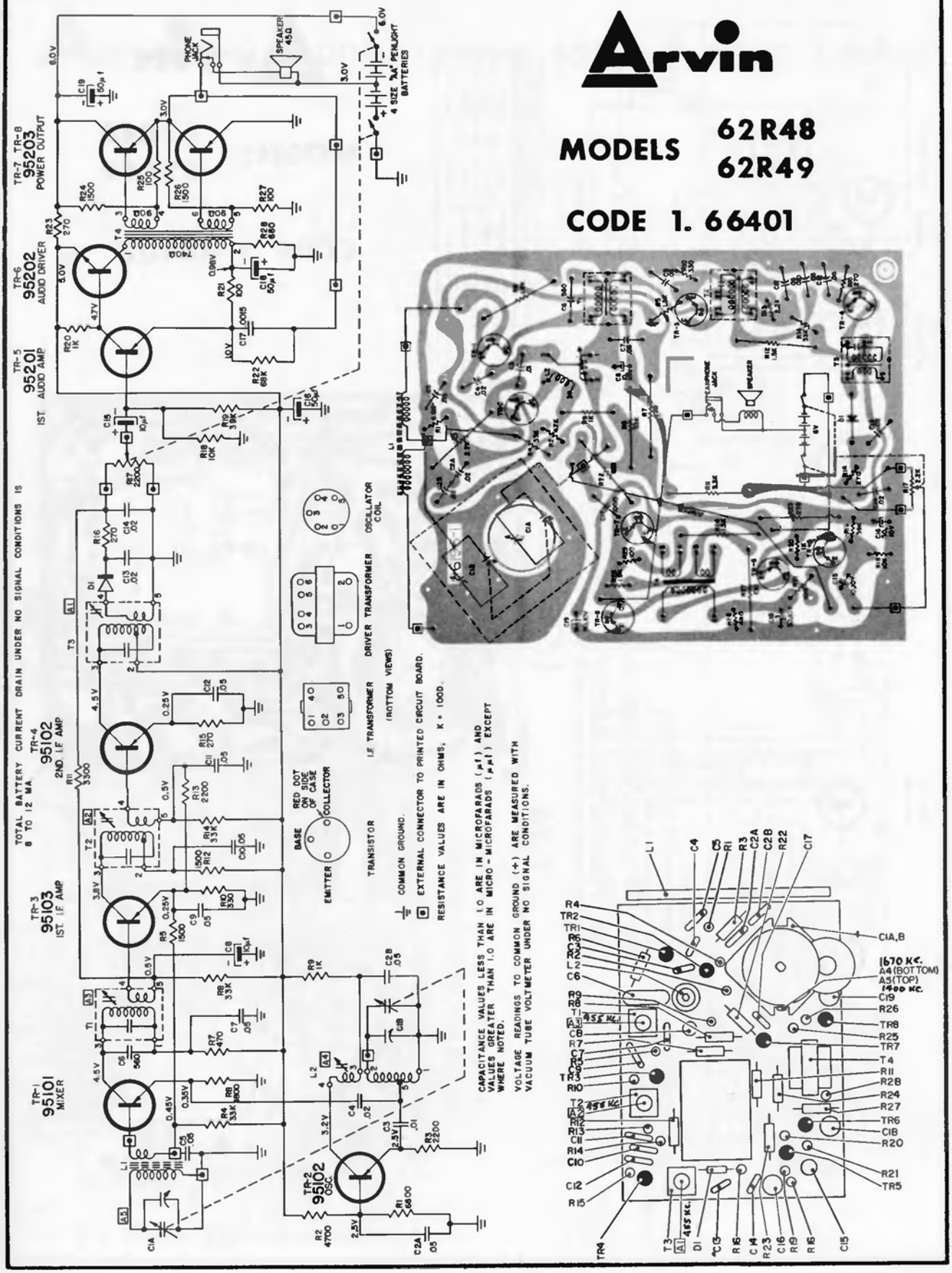

Arvin

MODELS 62R48 62R49

CODE 1. 66402

SIGNAL TEST POINTS	TEST FREQUENCY	SERIES CAPACITOR TO GENERATOR	50 MW OUTPUT (1.5V ACROSS 45Ω)
TR-4 BASE	455 KC	.06 μf	650 μV
TR-3 BASE	455 KC	.05 μf	30 μV
TR-1 BASE	455 KC	.05 μf	8 μV
STANDARD LOOP	1000 KC	STANDARD	200 μV/M

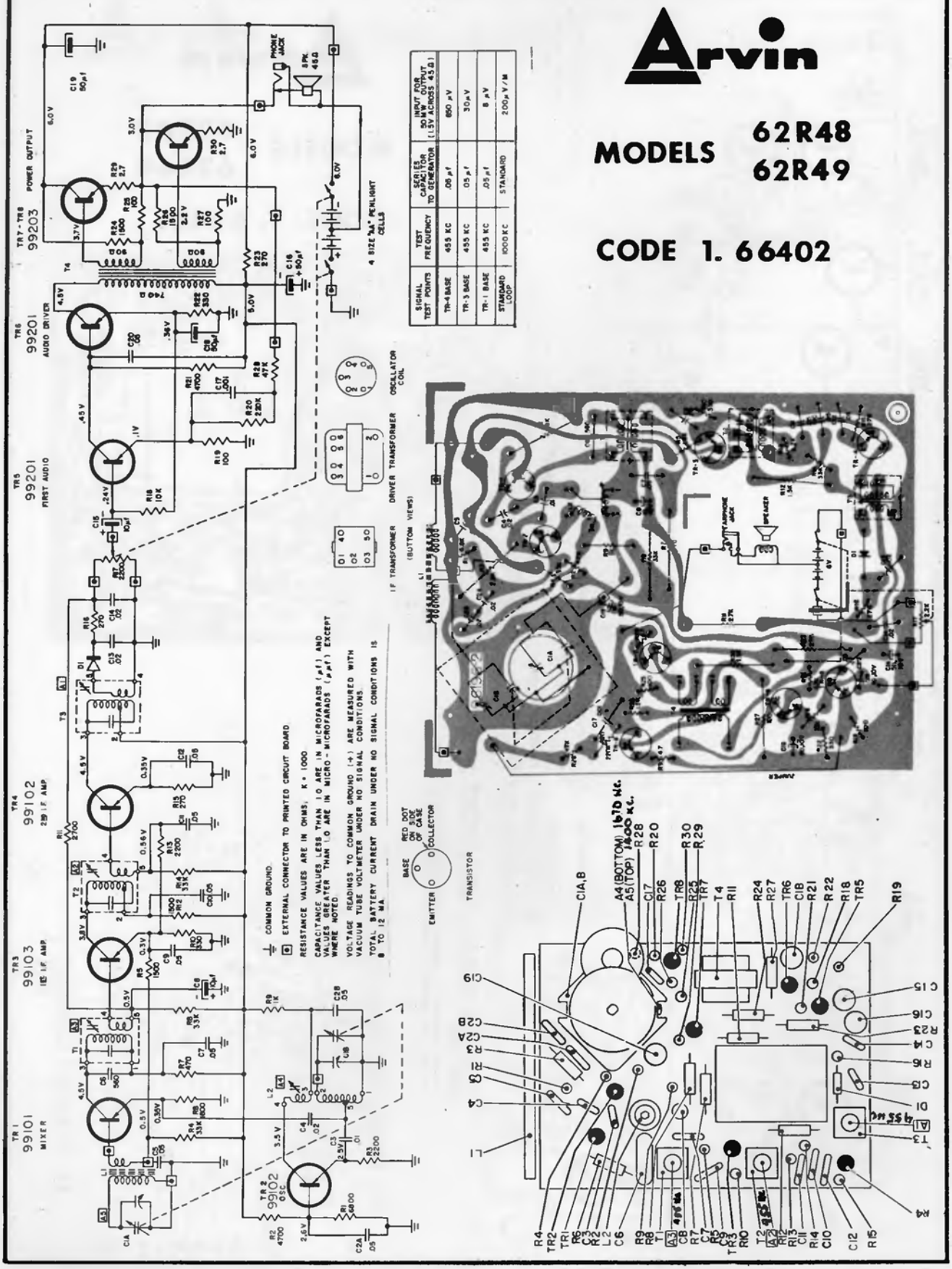

Arvin MODELS 62R65, 62R69, CODE 1.66102

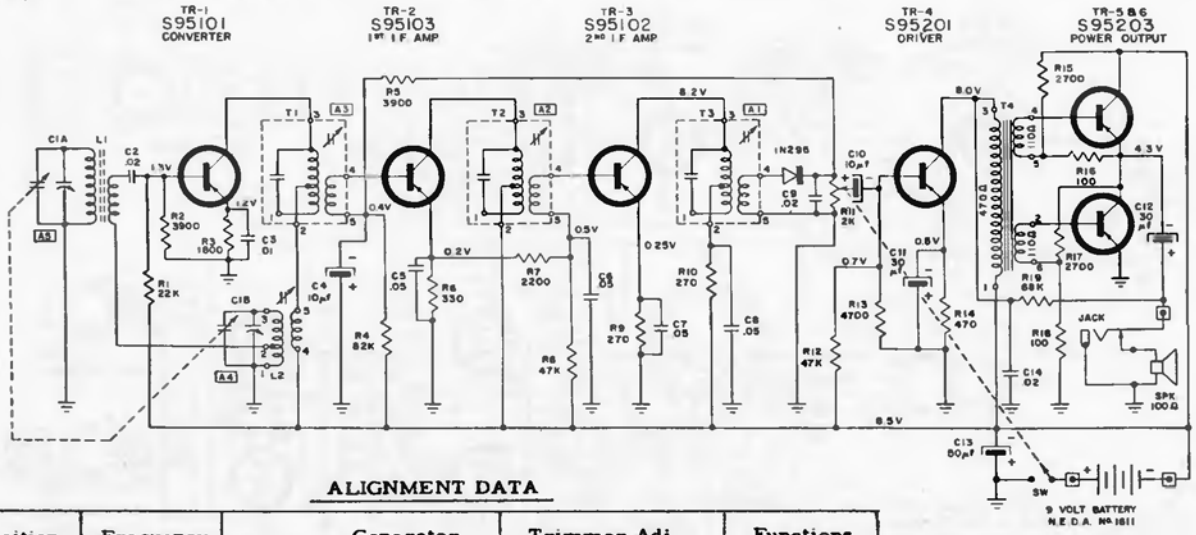

ALIGNMENT DATA

Position of Variable	Frequency of Generator	Dummy Antenna	Generator Output Connection	Trimmer Adj. in order shown for Max. Output	Functions of Trimmer
Open	455 Kc	.05 mf.	C1A	A1 (Top of T3)	I. F.
				A2 (Top of T2)	I. F.
				A3 (Top of T1)	I. F.
Open	1670 Kc		*Test Loop	A4	Oscillator
1400 Kc	1400 Kc		*Test Loop	A5	Antenna
600 Kc	600 Kc		*Test Loop	Check Point	

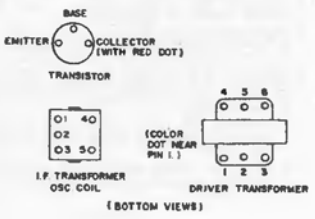

*Standard Hazeltine Test Loop Model 1150 or 3 turns of wire 6" in diameter placed about one foot from the receiver antenna.

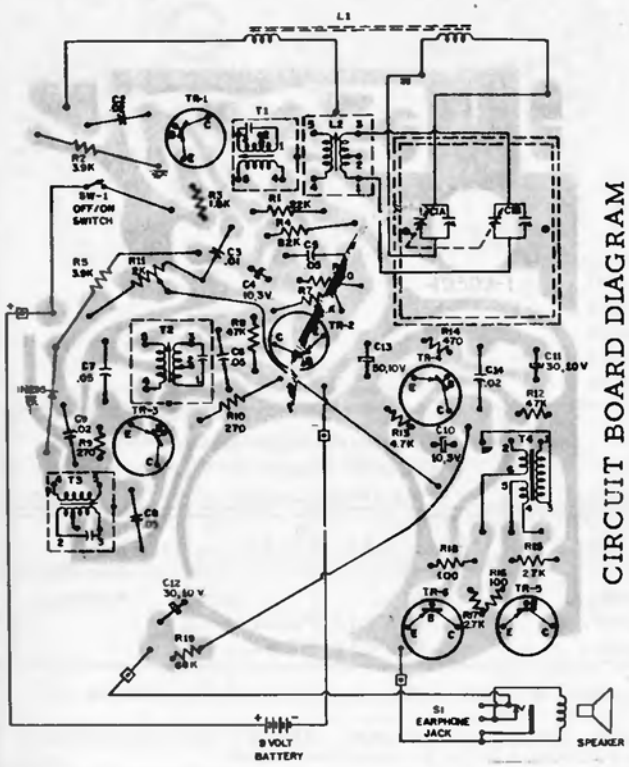

CIRCUIT BOARD DIAGRAM

⏚ = COMMON GROUND.

⊡ = EXTERNAL CONNECTION TO PRINTED CIRCUIT.

RESISTANCE VALUES ARE IN OHMS; K = 1000.

CAPACITANCE VALUES LESS THAN 1.0 ARE IN MICROFARADS (μf) AND VALUES GREATER THAN 1.0 ARE IN MICRO-MICROFARADS (μμf) EXCEPT WHERE NOTED.

VOLTAGE READINGS TO COMMON GROUND (+) ARE MEASURED WITH VACUUM TUBE VOLTMETER UNDER NO SIGNAL CONDITIONS.

TOTAL BATTERY CURRENT DRAIN UNDER NO SIGNAL CONDITIONS, 7 TO 10 MA.

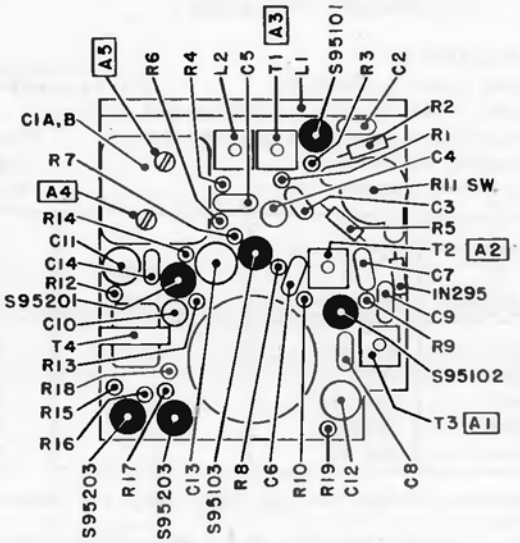

LOCATION OF PARTS (Top)

Arvin MODEL 72P25 CODE 1.69701

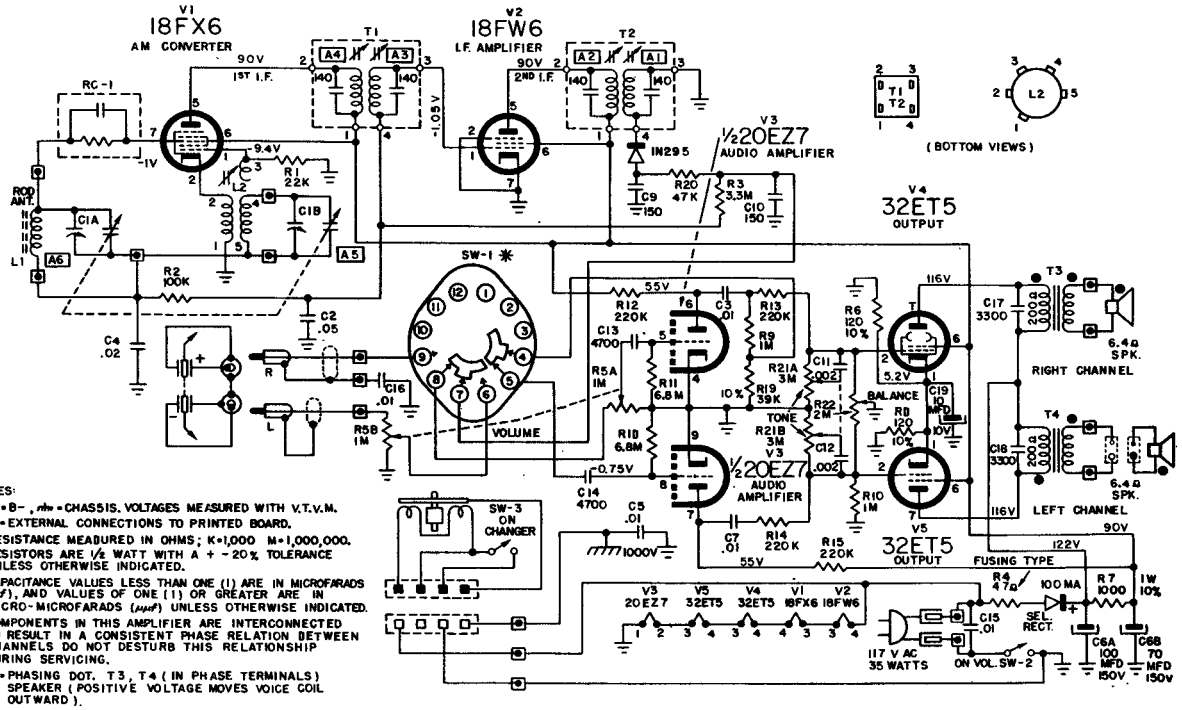

NOTES:
1. ⏚ = B−, ⏚ = CHASSIS. VOLTAGES MEASURED WITH V.T.V.M.
2. ⊟ = EXTERNAL CONNECTIONS TO PRINTED BOARD.
3. RESISTANCE MEASURED IN OHMS; K=1,000 M=1,000,000.
4. RESISTORS ARE ½ WATT WITH A + −20% TOLERANCE UNLESS OTHERWISE INDICATED.
5. CAPACITANCE VALUES LESS THAN ONE (1) ARE IN MICROFARADS (μf), AND VALUES OF ONE (1) OR GREATER ARE IN MICRO-MICROFARADS (μμf) UNLESS OTHERWISE INDICATED.
6. COMPONENTS IN THIS AMPLIFIER ARE INTERCONNECTED TO RESULT IN A CONSISTENT PHASE RELATION BETWEEN CHANNELS DO NOT DESTURB THIS RELATIONSHIP DURING SERVICING.
7. ● = PHASING DOT. T3, T4 (IN PHASE TERMINALS) SPEAKER (POSITIVE VOLTAGE MOVES VOICE COIL OUTWARD).
*8. SELECTOR SWITCH VIEWED FROM FRONT IN FULL COUNTER CLOCKWISE, RADIO POSITION − 60° DETENT.

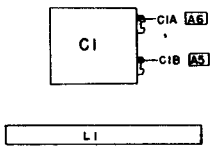

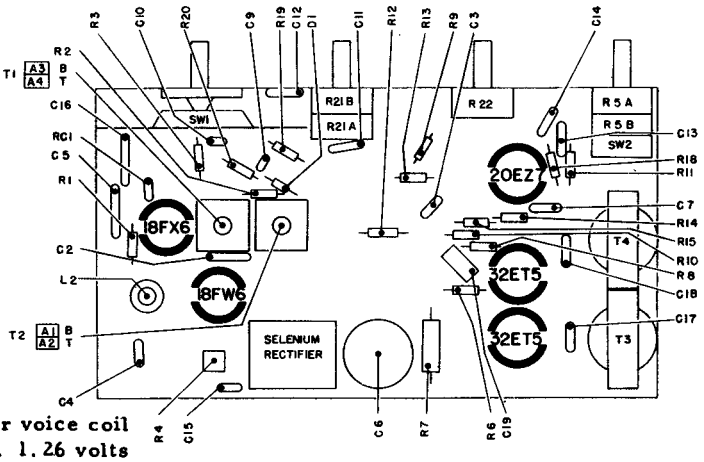

ALIGNMENT PROCEDURE

PRELIMINARY:

Output meter connection ..... Across speaker voice coil
Output meter reading to indicate 500 milliwatts .. 1.26 volts
Connection of generator ground lead ..... Floating ground
Generator modulation ..... 30% 400 cycles
Position of Volume Control ..... Fully clockwise

Position of Variable	Frequency of Generator	Dummy Antenna	Generator Output Connection	Trimmers Adjusted in Order Shown* for Maximum Output	Function of Trimmer
Open	455 Kc	.05 μ fd	Pin 7 18FX6	A1, A2, A3, A4	I.F.
Open	1670 Kc		* Test Loop	A5	Oscillator
1400	1400 Kc		* Test Loop	A6	Antenna
1000	1000 Kc		* Test Loop	Fan C1A Plates	
600	600 Kc		* Test Loop	Fan C1A Plates	

*Standard Hazeltine Test Loop Model 1150 or a 6" diameter loop, composed of 3 turns of wire, placed about one foot from the set loop.

The alignment procedure should be repeated in the original order for greatest accuracy. Always keep the output from the signal generator at its lowest possible value to make the AVC action of the receiver ineffective.

Arvin

MODEL 72P33 CODE 1.72401
MODEL 72P03 CODE 1.68301

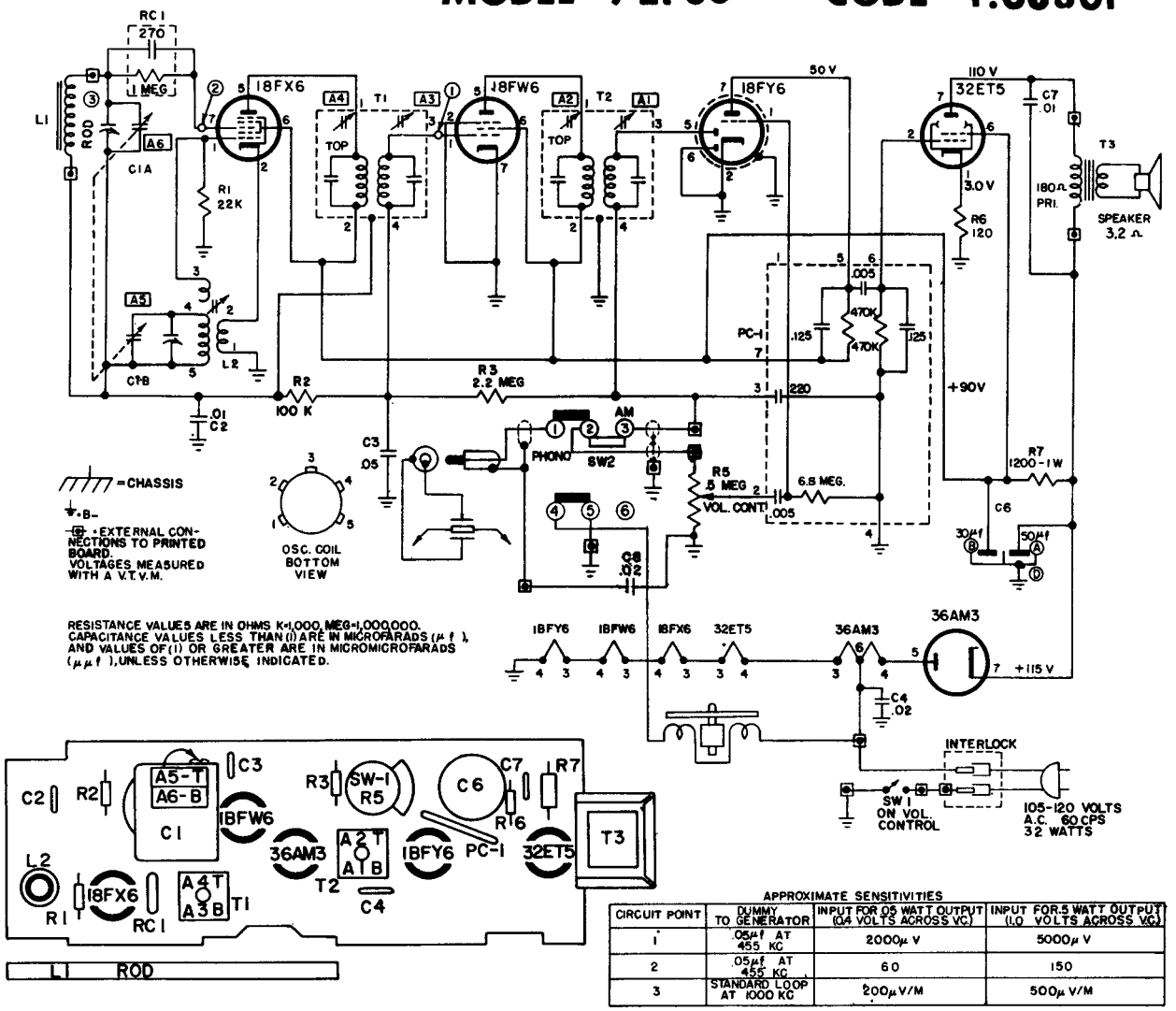

APPROXIMATE SENSITIVITIES

CIRCUIT POINT	DUMMY TO GENERATOR	INPUT FOR .05 WATT OUTPUT (.04 VOLTS ACROSS VC.)	INPUT FOR .5 WATT OUTPUT (1.0 VOLTS ACROSS VC.)
1	.05µf AT 455 KC	2000µ V	5000µ V
2	.05µf AT 455 KC	60	150
3	STANDARD LOOP AT 1000 KC	200µV/M	500µV/M

ALIGNMENT PROCEDURE

PRELIMINARY:

Output meter connection ..... Across speaker voice coil
Output meter reading to indicate 50 milliwatts (standard output) ..... 1.26 volts
Connection of generator ground lead ..... Floating ground
Generator modulation ..... 30% 400 cycles
Position of Volume Control ..... Fully clockwise

Position of Variable	Frequency of Generator	Dummy Antenna	Generator Output Connection	Trimmers Adjusted in Order Shown for Maximum Output	Function of Trimmer
Open	455 Kc	.05 µ fd	Pin 7 18FX6	A1, A2, A3, A4	I.F.
Open	1640 Kc		* Test Loop	A5	Oscillator
1400	1400 Kc		* Test Loop	A6	Antenna
1000	1000 Kc		* Test Loop	Fan C1A Plates	
600	600 Kc		* Test Loop	Fan C1A Plates	

*Standard Hazeltine Test Loop Model 1150 or 3 turns of wire about 6" in diameter placed about one foot from the set loop.

ARVIN Models 72P59 and 72P68 (72P68 uses a 3-speaker system)

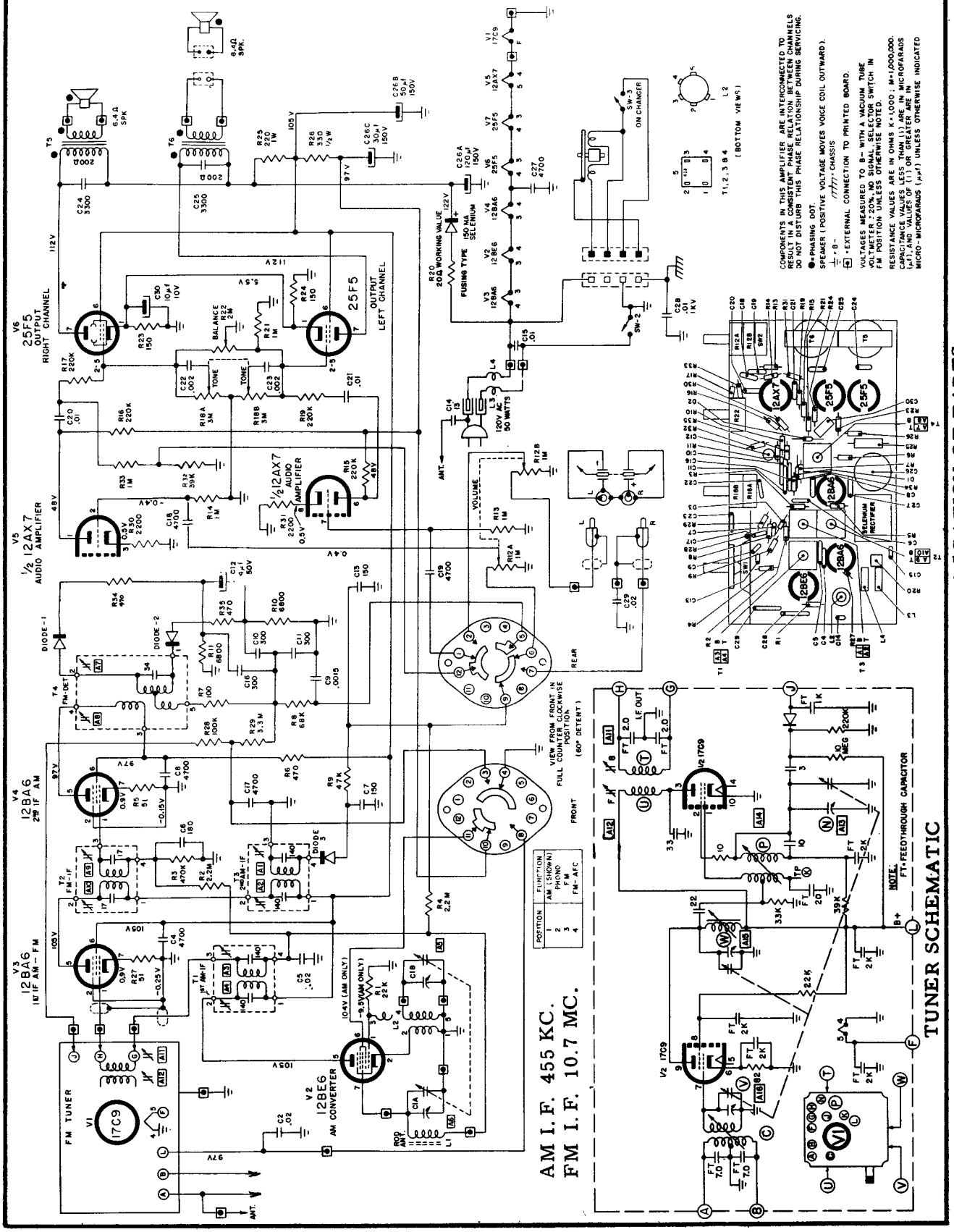

Arvin MODEL 92P48 CODE 1.70601

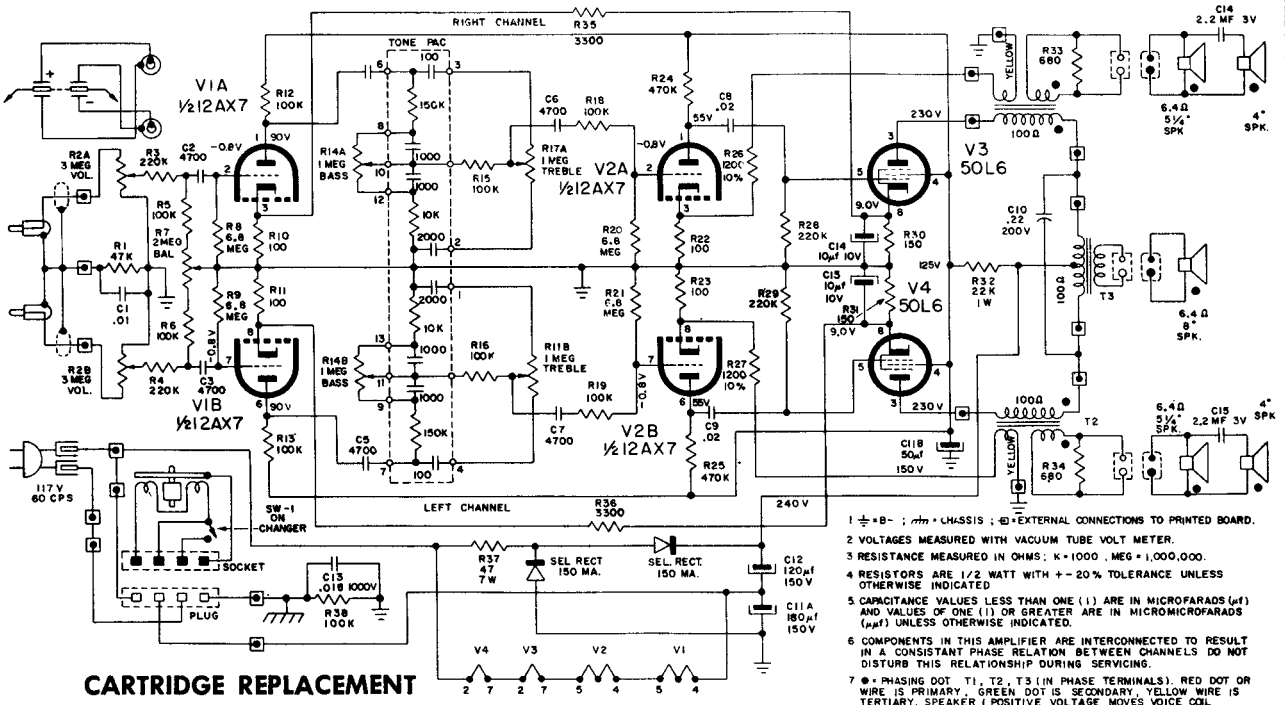

1 ⏚ = B- ; ⏥ = CHASSIS ; ⊕ = EXTERNAL CONNECTIONS TO PRINTED BOARD.
2 VOLTAGES MEASURED WITH VACUUM TUBE VOLT METER.
3 RESISTANCE MEASURED IN OHMS; K = 1000 , MEG = 1,000,000.
4 RESISTORS ARE 1/2 WATT WITH + - 20% TOLERANCE UNLESS OTHERWISE INDICATED
5 CAPACITANCE VALUES LESS THAN ONE (1) ARE IN MICROFARADS (µf) AND VALUES OF ONE (1) OR GREATER ARE IN MICROMICROFARADS (µµf) UNLESS OTHERWISE INDICATED.
6 COMPONENTS IN THIS AMPLIFIER ARE INTERCONNECTED TO RESULT IN A CONSISTANT PHASE RELATION BETWEEN CHANNELS DO NOT DISTURB THIS RELATIONSHIP DURING SERVICING.
7 ● = PHASING DOT T1, T2, T3 (IN PHASE TERMINALS). RED DOT OR WIRE IS PRIMARY, GREEN DOT IS SECONDARY, YELLOW WIRE IS TERTIARY. SPEAKER (POSITIVE VOLTAGE MOVES VOICE COIL OUTWARD).
8 RESISTORS WITH THE SAME "R" NUMBER AND LETTERS FOLLOWING ARE GANGED TOGETHER

CARTRIDGE REPLACEMENT

To remove cartridge grasp the tip of the cartridge, and pull straight out. (See Illustration) To replace cartridge, align grooves in cartridge with grooves in cartridge holder and push in gently.

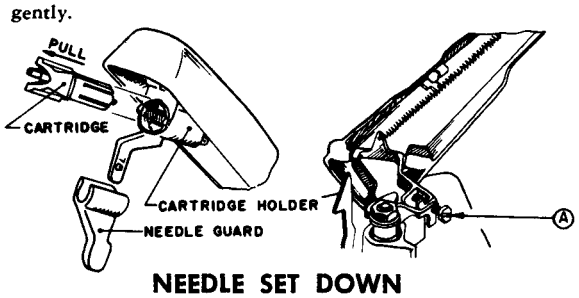

NEEDLE SET DOWN

Make needle set down adjustment only when necessary. To obtain the correct needle set down point, a screwdrive slot screw indicated by A (see illustration) is located at base of the tone arm. Turning screw clockwise moves the needle toward the outer edge of the record; counter-clockwise rotation moves the needle toward the center of the record.

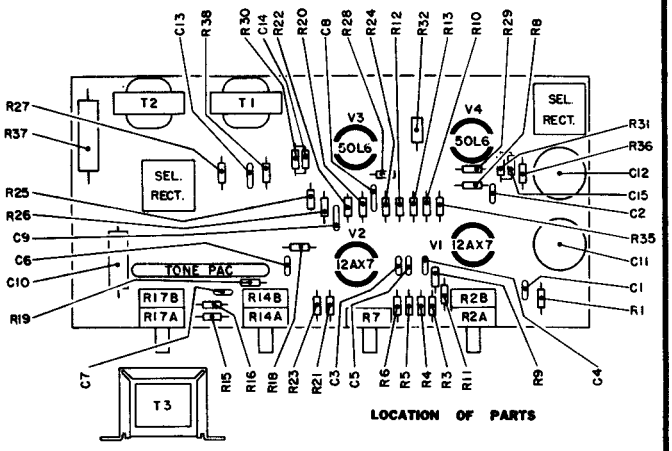

SCHEMATIC LOCATION	PART NO.	DESCRIPTION
	CAPACITORS	
C1	43674-1	.01 uf., Disc.
C2, 3, 4, 5, 6, 7	43674-15	.0047 uf., Disc.
C8, 9	43674-7	.02 uf., Disc.
C10	45503-4	.22 uf., Paper Tubular
C11A, B	97711-8	180-50/150V., Elect.
C12	97711-3	120 uf/150V., Elect.
C13	41135-6	.02 uf., Disc., 1000V
C14, 15	44396-2	10 uf., 10V., Elect.
T1, 2	96430-3	Transformer, Output
T3	43393-7	Transformer, Output

SCHEMATIC LOCATION	PART NO.	DESCRIPTION
	RESISTORS	
R1	43687-473	470 ohm, 1/2W., 20%
R2A, B	47100-9	Control, Stereo, Dual 3 meg ohm
R3, 4, 28, 29	43687-224	220K ohm, 1/2W., 20%
R5, 6, 12, 13, 15, 16, 18, 19, 38	43687-104	100K ohm, 1/2W., 20%
R7	49000-14	Control, Balance, 2 meg ohm
R8, 9, 20, 21	43687-685	6.8 meg ohm, 1/2W., 20%
R10, 11, 22, 23	43687-101	100 ohm, 1/2W., 20%
R14A, B	47100-15	Control, Bass, Dual, 1 meg ohm
R17A, B	47100-15	Control, Treble, Dual, 1 meg ohm
R24, 25	43687-474	470K ohm, 1/2W., 20%
R26, 27	43689-122	1200 ohm, 1/2W., 10%
R30, 31	43687-151	150 ohm, 1/2W., 20%
R32	47325-223	22K ohm, 1W., 20%
R33, 34	43689-681	680 ohm, 1/2W., 10%
R35, 36	43687-332	3300 ohm, 1/2W., 20%
R37	47727-4	47 ohm, Fusing

CHANNEL MASTER

Models 6532, 6533

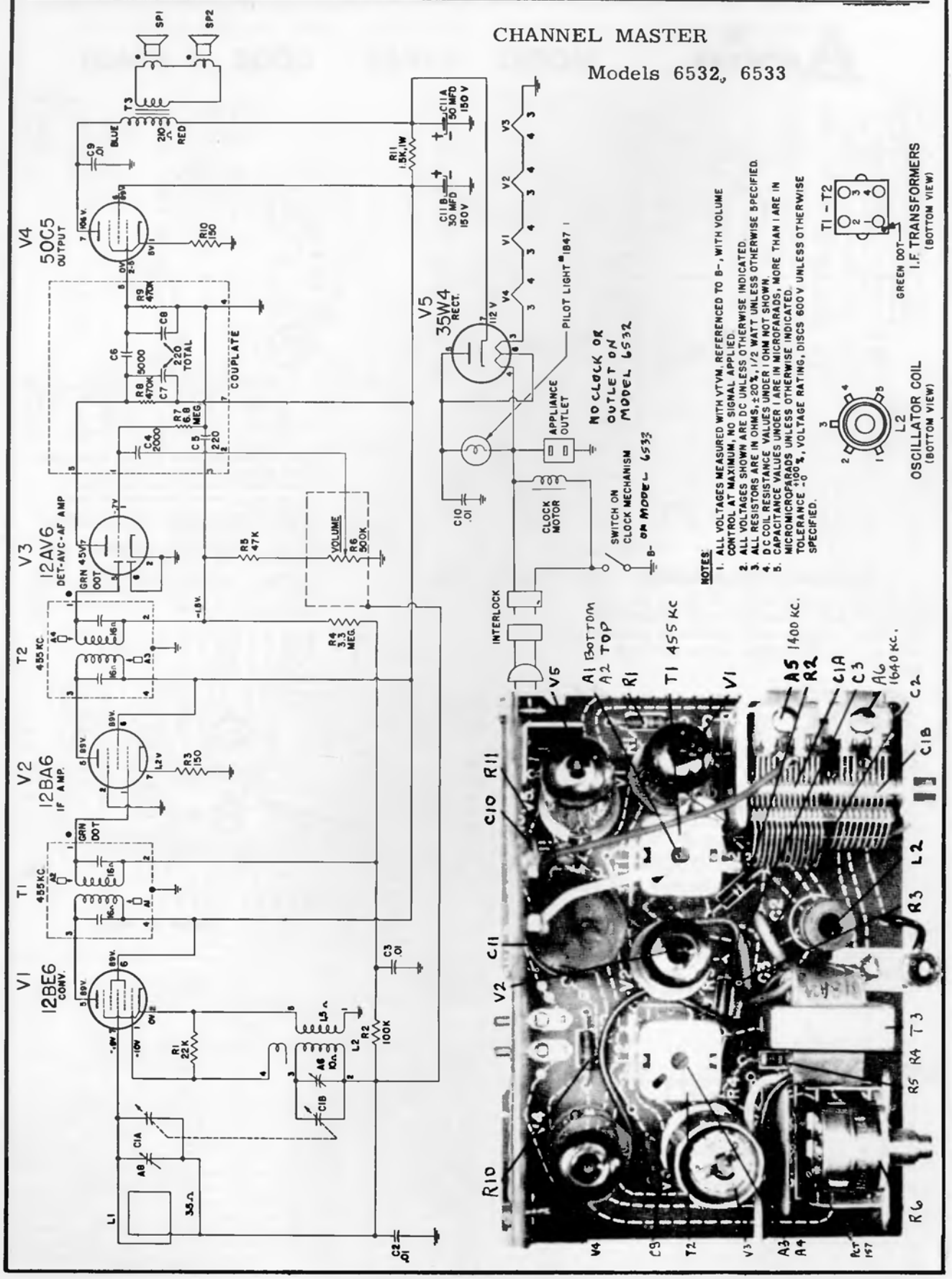

Delco

BUICK Model 980296
CHEVROLET Model 985264
PONTIAC Models 983579, 983687
STUDEBAKER Models AC-3216, AC-3247, AC-3256

(Continued on pages 24 and 25)

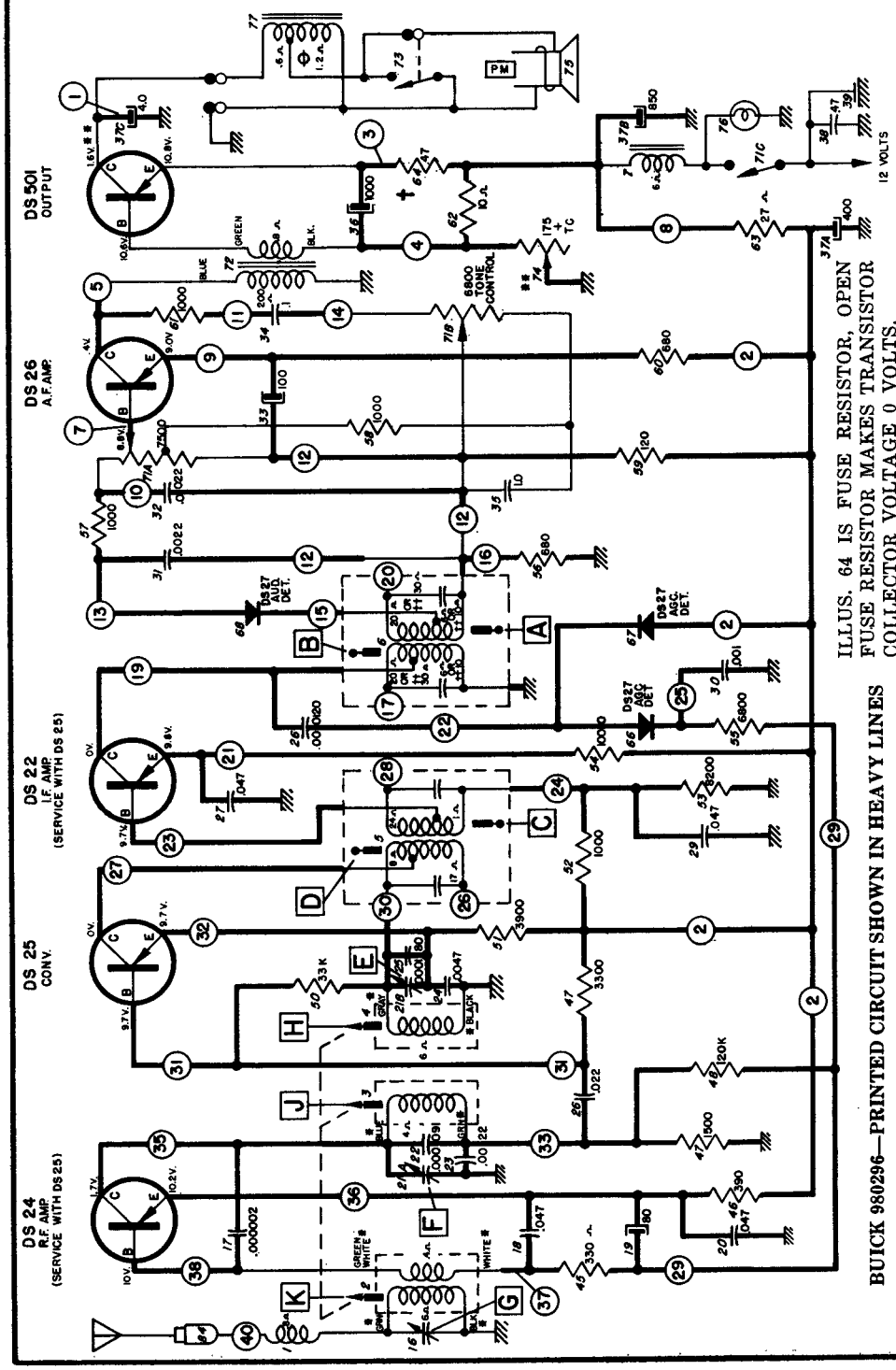

ILLUS. 64 IS FUSE RESISTOR, OPEN FUSE RESISTOR MAKES TRANSISTOR COLLECTOR VOLTAGE 0 VOLTS.

VOLTAGES MEASURED TERMINAL TO CHASSIS WITH A VOM—NO SIGNAL AND 12.0 VOLTS AT ILLUS. 39.
TOTAL "A" DRAIN AT 12V.—1.2 AMPS.
TOLERANCE ON VOLTAGES ± 10%
*—INDICATES LEAD FROM TUNER COIL ASS'Y.
**—BEFORE MEASURING TRANSISTOR VOLTAGES, THE SHORTING TYPE SPEAKER SOCKET MUST BE OPENED AND A 4 OHM SPEAKER CONNECTED, IF TRANSISTOR IS REPLACED, ADJUST BIAS POTENTIOMETER (ILLUS. 74) TO OBTAIN PROPER COLLECTOR VOLTAGE WITH 12 VOLTS INPUT TO RADIO.
"F"—ILLUS. 64 IS A FUSE RESISTOR FOR THE TRANSISTOR. SERVICE WITH EXACT REPLACEMENT.
Φ—OUTPUT TRANSFORMER WILL APPEAR SHORTED IF SHORTING TYPE SPEAKER SWITCH IS NOT HELD OPEN.

Applicable alignment table is on page 26 under a similar Buick model.

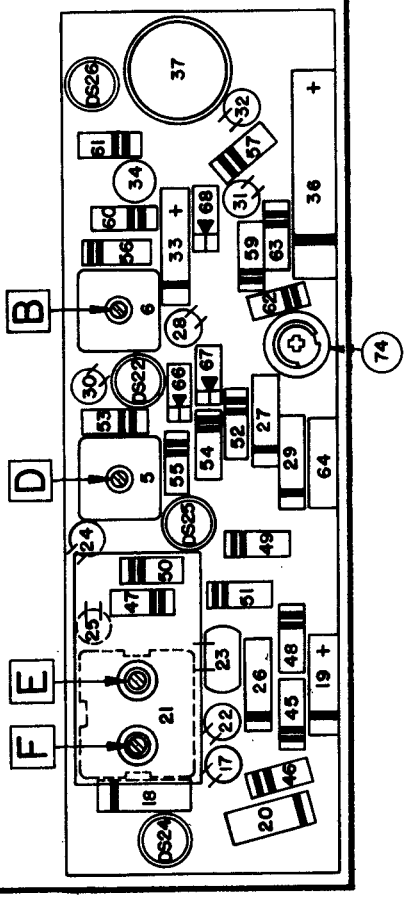

BUICK 980296—PRINTED CIRCUIT SHOWN IN HEAVY LINES

DELCO RADIO
BUICK Model 980296
CHEVROLET Model 985264
PONTIAC Models 983579, 983687
STUDEBAKER Models AC-3216, AC-3247, AC-3256

(Continued from page 23. Applicable alignment table is on page 26, under another model.)

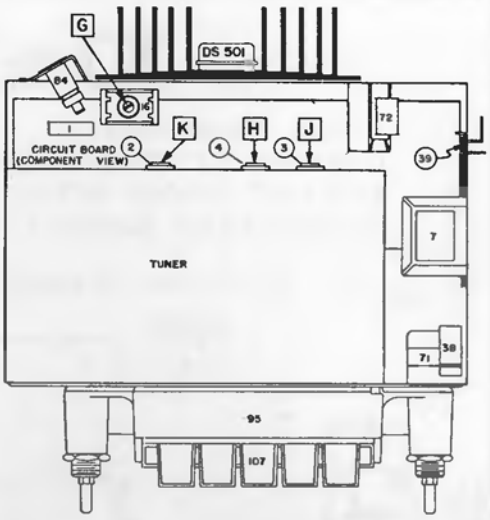

I. TROUBLESHOOTING PROCEDURE

1. Turn radio on (ear near speaker). If no "thump" is heard, suspect: open fuse, open "Fuse resistor," loose speaker plug, open speaker, or shorted DS501 transistor.

2. Isolate trouble to a stage (AF, IF, Conv., RF—see letters on circuit board below). Use a noise generator or other device at each point, starting with 1.

3. Measure voltages in defective stage. Note: Voltage between 10.8 V. line (conductor #2) & emitter (E) of each stage checks conduction of that stage.

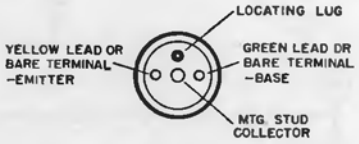

DS 501—Transistor Terminals

NOTE: Mtg. insulators, #1221642, not packaged with DS-501. These insulators are not required if radiator is insulated from case.

II. VOLTAGE AND TROUBLE HINTS

Stage Voltage (B, C, E, to ground)	Bias Voltage (B to E)	Defect	Quick Check to Confirm
Normal	Over .5 V.	Open small transistor	*Bridge good one across old one
Normal	Normal	Open capacitor	Bridge good one across old one
E is zero	Wrong polarity	Shorted emitter cap.	Ohmmeter
C is 11 V.	Normal	Open collector circuit	Ohmmeter
E is very low.	"0" or reversed	Open emitter circuit	Ohmmeter
Normal	Normal	Defective IF	Ohmmeter & try for peak.

* Small transistors may be checked for open by bridging a good one across (without unsoldering old one). All three leads must be firmly connected. If radio starts playing, replace old one.

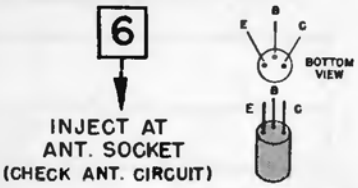

DS-22, 24, 25 and 26 Transistor Terminals

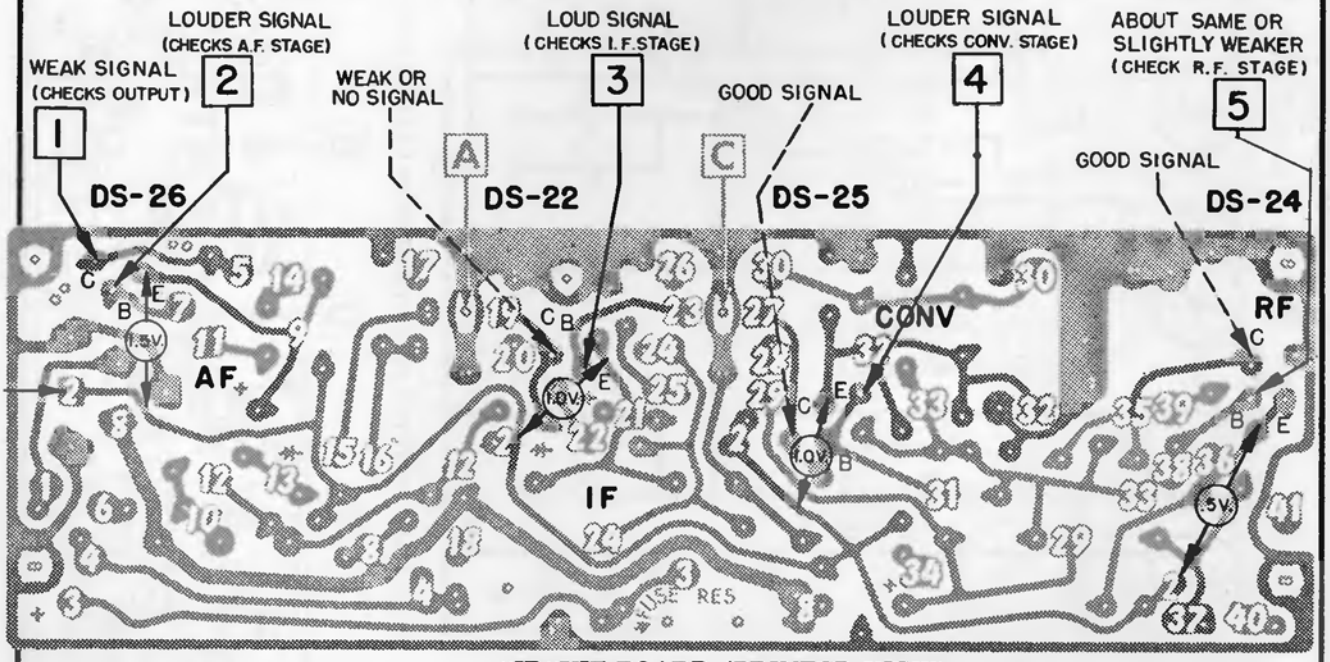

CIRCUIT BOARD (PRINTED VIEW)

NUMBERS IN SQUARES ARE MAJOR TEST POINTS FOR STAGE ISOLATION—INJECT SIGNAL

Delco

LATE PRODUCTION CHANGES

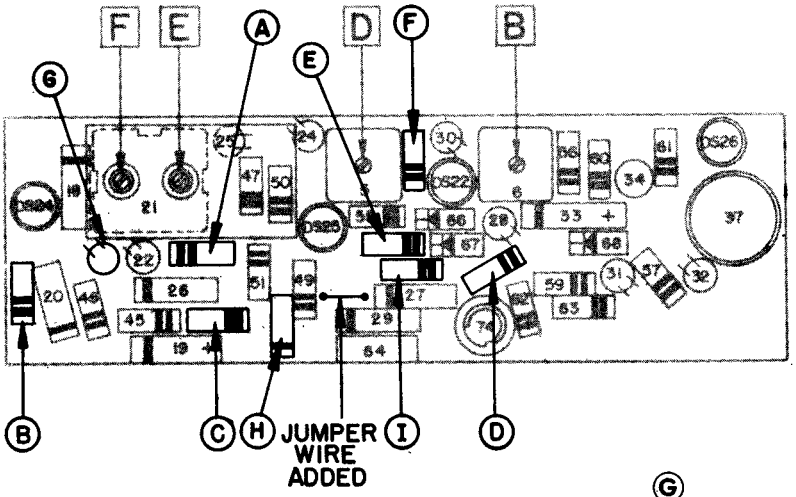

Models Involved

Pontiac PB - 983579
Tempest PB - 983687
Buick PB - 980296
Special PB - 980316
Studebaker PB-AC-3216, AC-3247, AC-3256

Parts Added

Description

560 ohm, ½ watt
15 ohm, ½ watt
33,000 ohm, ½ watt

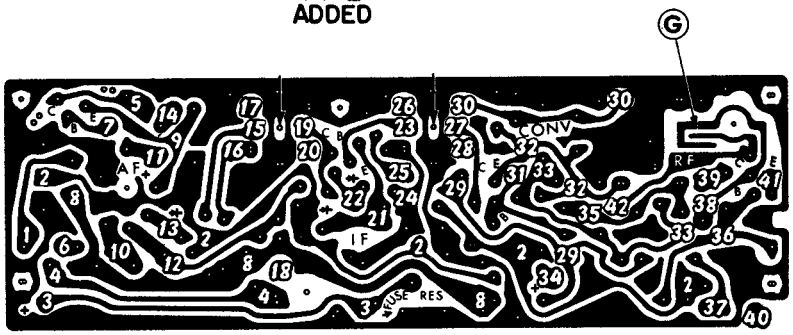

Changes (Refer to component view.)

A - Add 560 ohm resistor, ½ watt
B - Add 15 ohm resistor, ½ watt
C - Change from 120K to 150K ohms
D - Change from 1000 to 4700 ohms
E - Add 33K ohm resistor, ½ watt
F - Change from 8.2K ohm (6.8K ohm in models 983687 & 980316) to 33K ohm.
G - Remove .000002 mfd. capacitor (replaced by printed capacitor.)
H - .0022 mfd. tubular capacitor replaces disc type and is mounted in new location on the printed circuit board.
I - 1000 ohm resistor is mounted in new location on printed circuit board.

Island #2 is separated into two parts, and interconnected with a jumper wire.

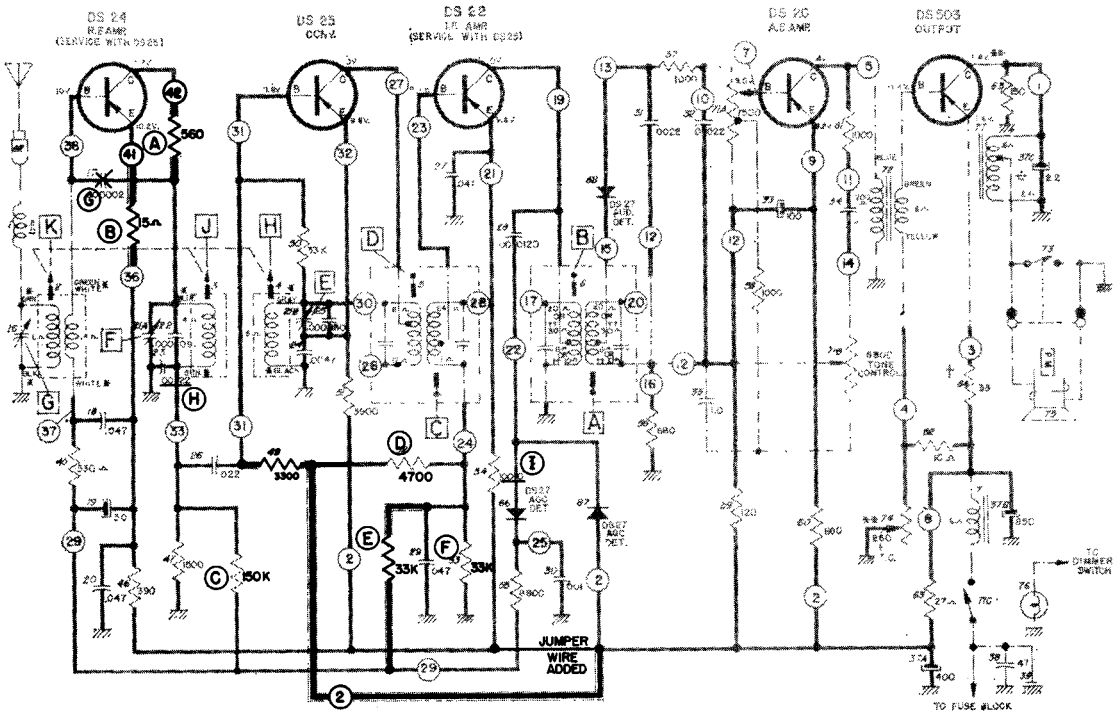

SCHEMATIC DIAGRAM—CHANGES IN SOLID LINES

Delco

BUICK MODEL 980316

(This set is very similar to 980296, etc., on pages 23, 24, and 25. Refer to these pages to supplement material on this page.)

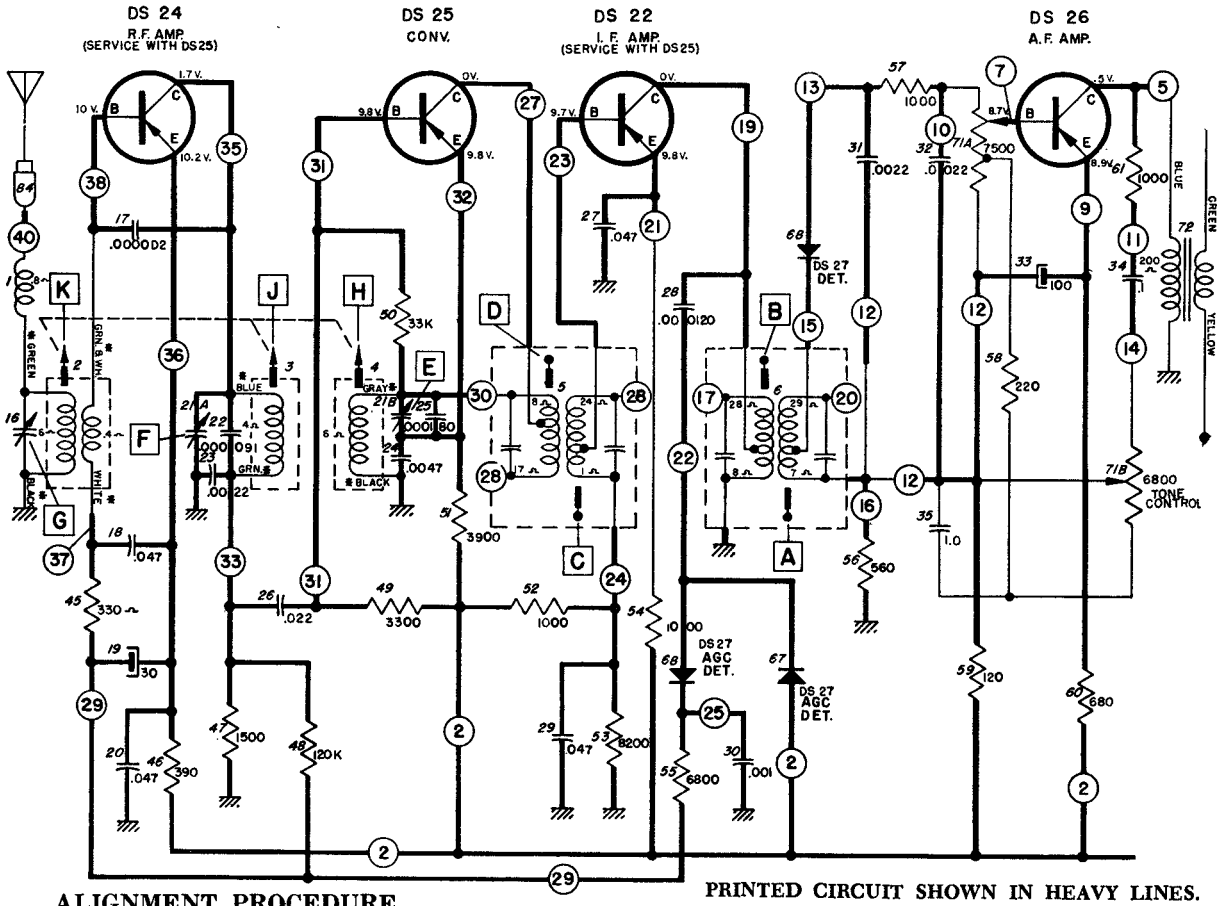

(For balance of circuit see diagram on page 23)

PRINTED CIRCUIT SHOWN IN HEAVY LINES.

(For diagram notes see page 23)

ALIGNMENT PROCEDURE

Output Meter Connections.....Across Voice Coil

Generator Return.....To Receiver Chassis

Dummy Antenna.....In Series With Generator

Volume Control Position.....Maximum Volume

Generator Output.....Minimum for Readable Indication

STEPS	SERIES CAPACITOR OR DUMMY ANTENNA	CONNECT SIGNAL GENERATOR TO	SIGNAL GENERATOR FREQUENCY	TUNE RECEIVER TO	ADJUST IN SEQUENCE FOR MAX. OUTPUT
1	0.1 Mfd.	DS-25 Converter Base	262 KC	High Frequency Stop	A, B, C, D
2	.000082 Mfd.	Antenna Connector	1615 KC	High Frequency Stop	*E, F, G
3	.000082 Mfd.	Antenna Connector	600 KC	Signal Generator Signal	J, K
4	.000082 Mfd.	Antenna Connector	1615 KC	High Frequency Stop	F, G
5	.000082 Mfd.	Antenna Connector	1100 KC	Signal Generator Signal	L**

*Before making this adjustment check mechanical setting of oscillator core "H". The rear of the core should be 1⅝" from the mounting end of the coil form. (This measurement is readily made by inserting a suitable plug in the mounting end of the coil form.) Core adjustment should be made with a non-metallic screw driver.

**L is the pointer adjustment screw which is on the connecting link, between the pointer assembly and the parallel guide bar. It should be adjusted so that the dial pointer corresponds with the 1100 K.C. mark on the dial.

With the radio installed and the car antenna plugged in adjust the antenna trimmer "G" for maximum volume with the radio tuned to a weak station between 600 - 1000 KC (see sticker on case.)

Delco Radio

OLDSMOBILE DELUXE WITH PUSHBUTTON TUNING
MODEL 982029

(For additional service data see page 24; alignment table on page 26)

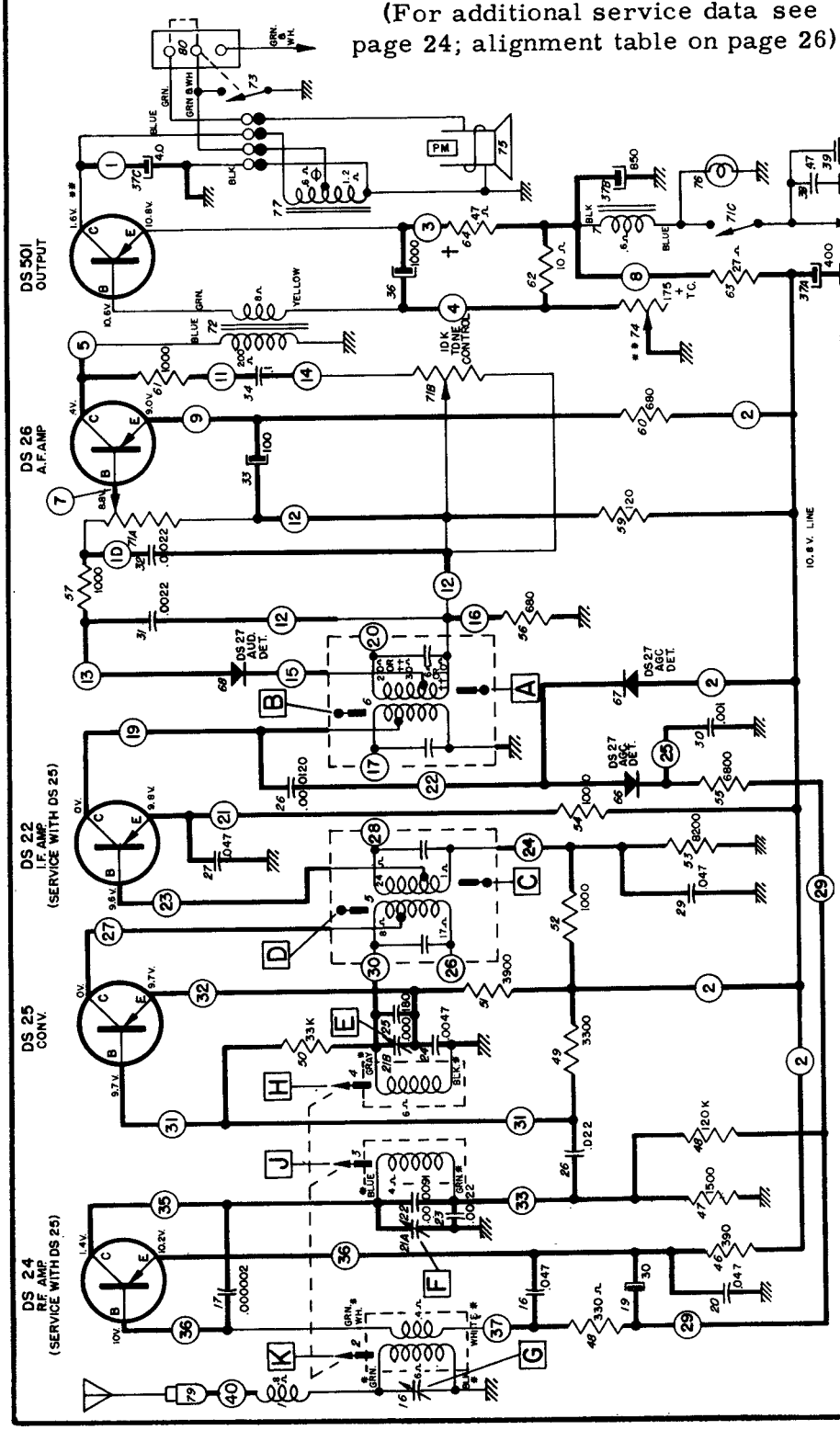

OLDSMOBILE 982029—PRINTED CIRCUIT SHOWN IN HEAVY LINES.

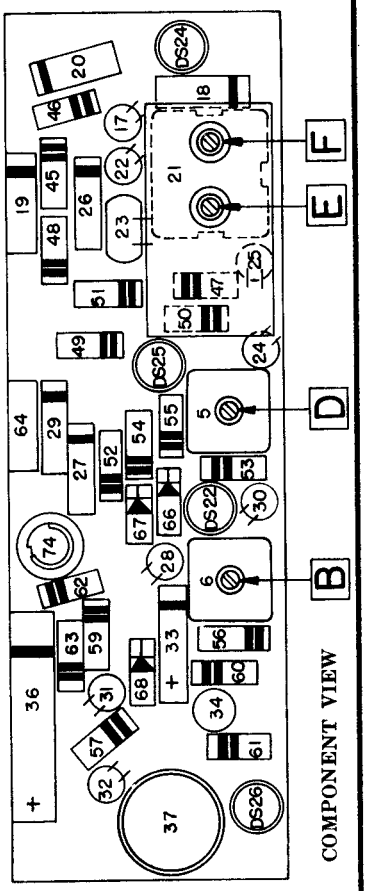

COMPONENT VIEW

VOLTAGES MEASURED TERMINAL TO CHASSIS WITH A VOM— NO SIGNAL AND 12.0 VOLTS AT ILLUS. 39.
TOTAL "A" DRAIN AT 12V.-1.2 AMPS.
TOLERANCE ON VOLTAGES ± 10%
*—INDICATES LEAD FROM TUNER COIL ASS'Y.
**—BEFORE MEASURING TRANSISTOR VOLTAGES, THE SPEAKER AND TRANSFORMER ASS'Y MUST BE CONNECTED, IF TRANSISTOR IS REPLACED, ADJUST BIAS POTENTIOMETER (ILLUS. 74) TO OBTAIN PROPER COLLECTOR VOLTAGE WITH 12 VOLTS INPUT TO RADIO.
†—ILLUS. 64 IS A FUSE RESISTOR FOR THE TRANSISTOR. SERVICE WITH EXACT REPLACEMENT.
⊕—OUTPUT TRANSFORMER WILL APPEAR SHORTED IF SHORTING SWITCH IN REAR SPEAKER SOCKET IS NOT HELD OPEN.
††—WIRE SIZE CHANGED IN LATER PRODUCTION—COIL INTERCHANGEABLE.

Caution: Collector Voltage of DS-501 Transistor must be measured at transistor case (not at the heat radiator).

The Output Transformer is Mounted on Speaker. Do Not Operate Without it.

Delco

BUICK WONDER BAR MODEL 980297
PONTIAC DELUXE ELECTRAMATIC MODEL 983578

(Additional service data and alignment on page 29, adjacent at right)

BASIC TROUBLESHOOTING

1. Put ear next to speaker and turn radio on. If slight "thump" is heard as this is done, trouble is in tube stages—try new tubes.
2. If no "thump" at all is heard, measure voltage from transistor case to radio chassis. If 1-2 volts is present, transistor is operating normally and trouble is either in speaker, speaker interlock socket, or one of the tube circuits.
3. If no voltage is present in step 2, check transistor circuit and particularly the transistor fuse resistor, Illustration No. 69.

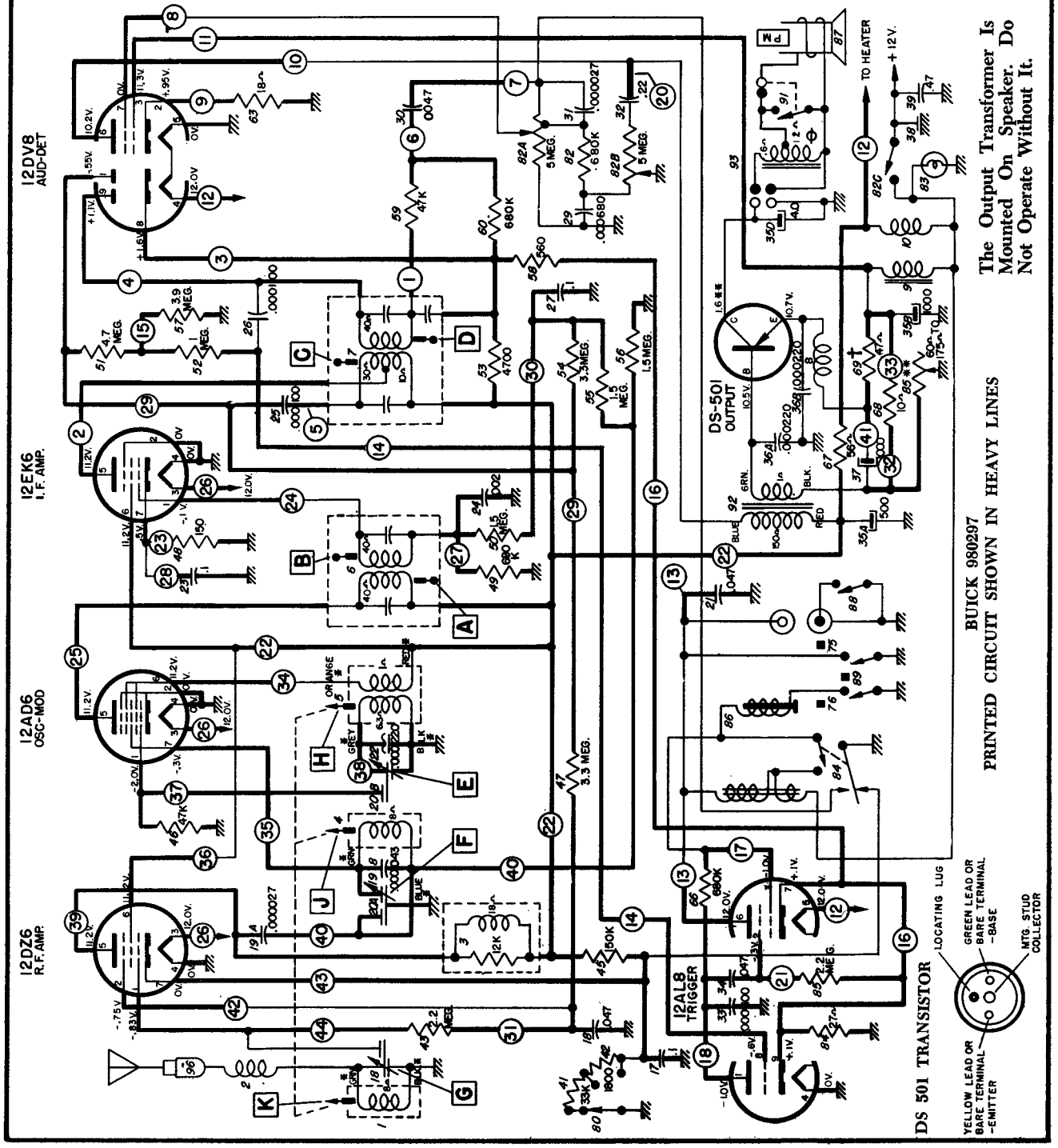

DELCO - BUICK Model 980297, PONTIAC Model 983578, Continued

SCHEMATIC DATA

Voltages measured terminal to chassis with a VTVM - No signal and 12.0 volts at Illustration 38.

Oscillator grid voltage taken with set tuned to 1000 kc.
Total "A" drain at 12 volts - 2.6 amps.
Tolerance on voltage ±10%.

• —Indicates lead from tuner coil assy.

••—Before measuring transistor voltages, the shorting type speaker socket must be opened and a 4 ohm speaker connected. If transistor is replaced, adjust bias potentiometer (Illustration 85) to obtain proper collector voltage with 12 volts input to radio. Speaker must be connected.

+—Illustration 69 is a fuse resistor for the transistor.

⊖—Output transformer may appear shorted if shorting type speaker socket is not held open.

■—F-3 tuner uses combination switch (Illus. #89), F-4 tuner uses separate switches.

WHITE NUMBERS ON PRINTED CIRCUIT DRAWING CORRESPOND TO THE ENCIRCLED NUMBERS ON SCHEMATIC.

ILLUSTRATION #69 IS A FUSE RESISTOR. IF THIS IS OPEN, THE TRANSISTOR VOLTAGE WILL BE "O."

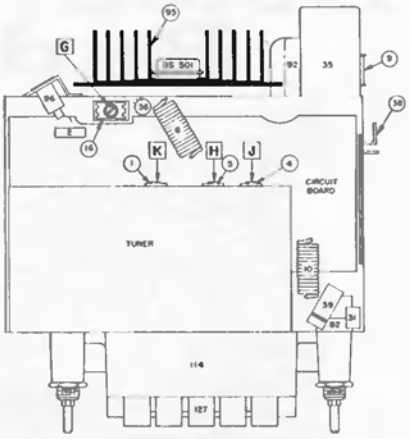

TUBE VIEW

IF RADIO IS POWERED BY BATTERY ELIMINATOR, USE 16 VOLTS FOR PROPER SOLENOID ACTION.

PUSHBUTTON SETUP PROCEDURE

Pull Pushbutton out. Tune in desired station manually. Push button all the way in.

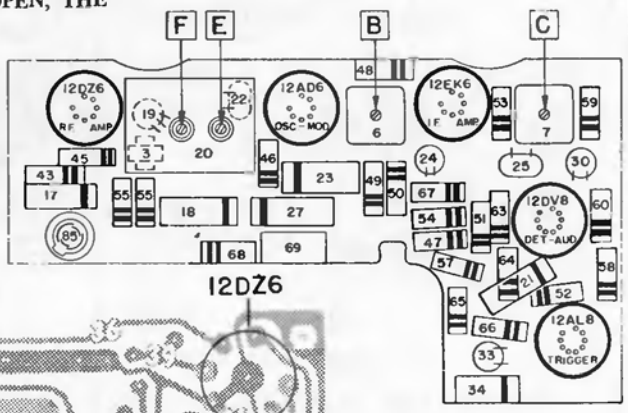

COMPONENT VIEW

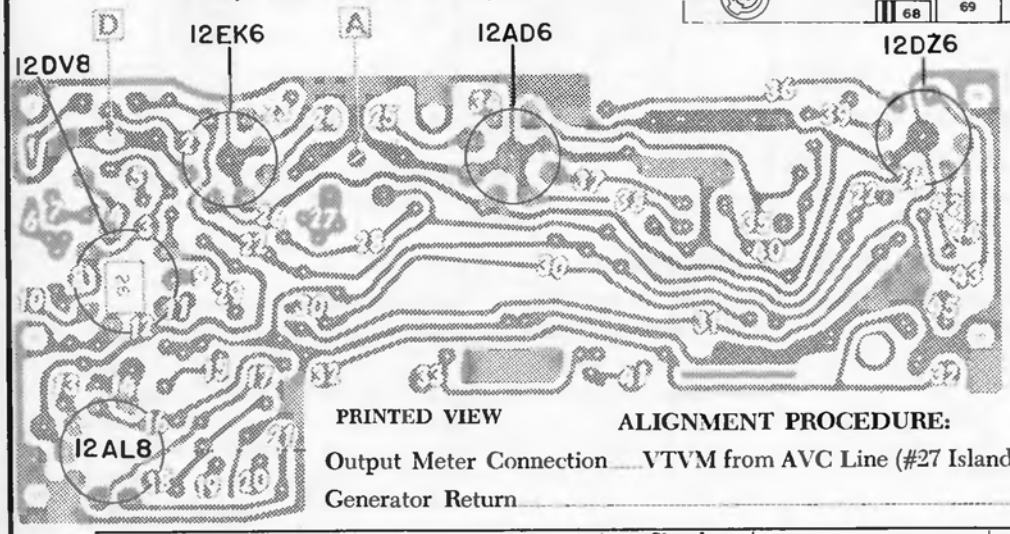

PRINTED VIEW

ALIGNMENT PROCEDURE:

Output Meter Connection ..... VTVM from AVC Line (#27 Island-Circuit Board) To Chassis

Generator Return ..... Receiver Chassis

Step	Dummy Antenna	Connect Signal Generator To	Signal Generator Frequency	Tune Receiver To	Adjust in Sequence For Output Indicated
1	0.1 Mfd.	12AD6 Grid (Pin 7)	262 KC	• High Frequency Stop	A, B, C (Max.), D (Min.)
2	.000082 Mfd.	Antenna Connector	1615 KC	High Frequency Stop	••E, F, G (Max.)
3	.000082 Mfd.	Antenna Connector	600 KC	Signal Generator Signal	J, K (Max.)
4	.000082 Mfd.	Antenna Connector	1615 KC	Signal Generator Signal	F, G (Max.)
5	.000082 Mfd.	Antenna Connector	1100 KC	Signal Generator Signal	•••L

•Tune manually towards the high frequency end of dial to the point where the solenoid switch closes.

••Before making this adjustment, check the setting of oscillator core "H." The rear of the core should be 1⅝" from the mounting end of the coil form. This measurement is readily made by inserting a suitable plug in the mounting end of the coil form. The core adjustment is made from the mounting end of the coil form with a non-metallic screwdriver.

•••"L" is the pointer adjustment in the middle of the core guide bar—adjust so pointer reads 1100 KC. With the radio installed and the antenna plugged in, adjust the antenna trimmer "G" for maximum volume with the radio tuned to a weak station between 600 and 1000 KC (see sticker on case.)

Delco Radio

OLDSMOBLE RADIO MODEL 982030

(Circuit diagram on page 31, adjacent at right)

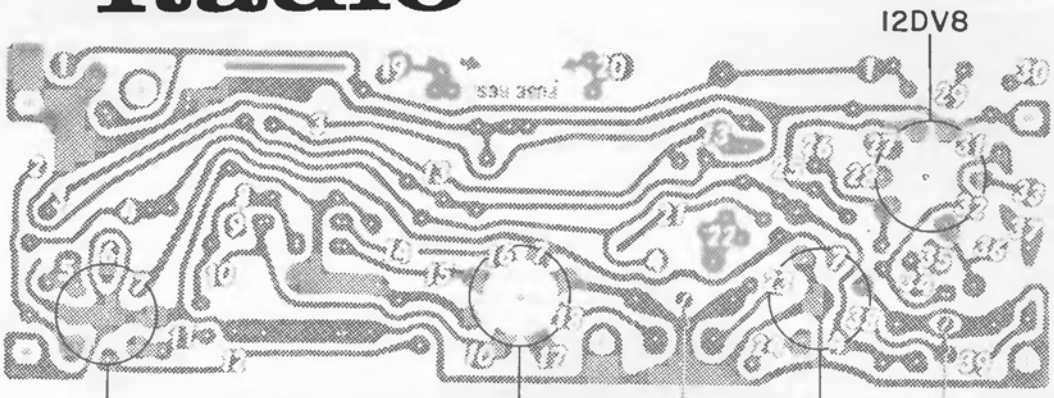

PRINTED VIEW

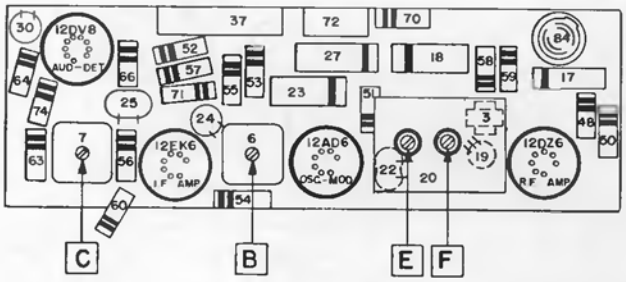

COMPONENT VIEW

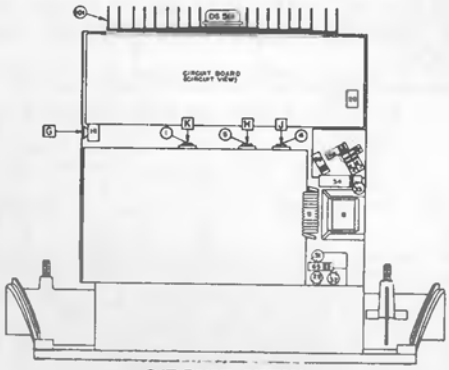

CIRCUIT VIEW

PUSHBUTTON SETUP PROCEDURE

Pull Pushbutton out. Tune in desired station manually. Push button all the way in.

SIGNAL SEEKING TUNER ALIGNMENT PROCEDURE:

NOTE: When aligning the signal seeker tuner type radio, be sure to use a vacuum tube voltmeter as indicated.

Output Meter Connection ..... VTVM From AVC Line (#22 Island-Circuit Board) To Chassis
Generator Return ..... Receiver Chassis
Dummy Antenna ..... In Series With Generator
Sensitivity Control ..... Maximum
Volume Control ..... Maximum Volume
Tone Control ..... Treble
Generator Output ..... Not to exceed 2 volts at VTVM

Step	Dummy Antenna	Connect Signal Generator To	Signal Generator Frequency	Tune Receiver To	Adjust In Sequence For Output Indicated
1	0.1 Mfd.	12AD6 Grid (Pin 7)	262 KC	*High Frequency Stop	A, B, C (Max.), D (Min.)
2	.000068 Mfd.	Antenna Connector	1615 KC	High Frequency Stop	**E, F, G (Max.)
3	.000068 Mfd.	Antenna Connector	600 KC	Signal Generator Signal	J, K (Max.)
4	.000068 Mfd.	Antenna Connector	1615 KC	Signal Generator Signal	F, G (Max.)
5	.000068 Mfd.	Antenna Connector	1100 KC	Signal Generator Signal	***L

*Tune manually towards the high frequency end of dial and stop at the point where the solenoid switch closes.

**Before making this adjustment, check the setting of oscillator core "H." The rear of the core should be 1⅝" from the mounting end of the coil form. This measurement is readily made by inserting a suitable plug in the mounting end of the coil form. The core adjustment is made from the mounting end of the coil form with a non-metallic screwdriver.

***"L" is the pointer adjustment slot on the pointer assembly—adjust so pointer reads 1100 KC.
With the radio installed and the antenna plugged in, adjust the antenna trimmer "G" for maximum volume with the radio tuned to a weak station between 600 and 1000 KC (see sticker on case.)

DELCO - OLDSMOBILE Model 982030

(Continued from page 30, at left)

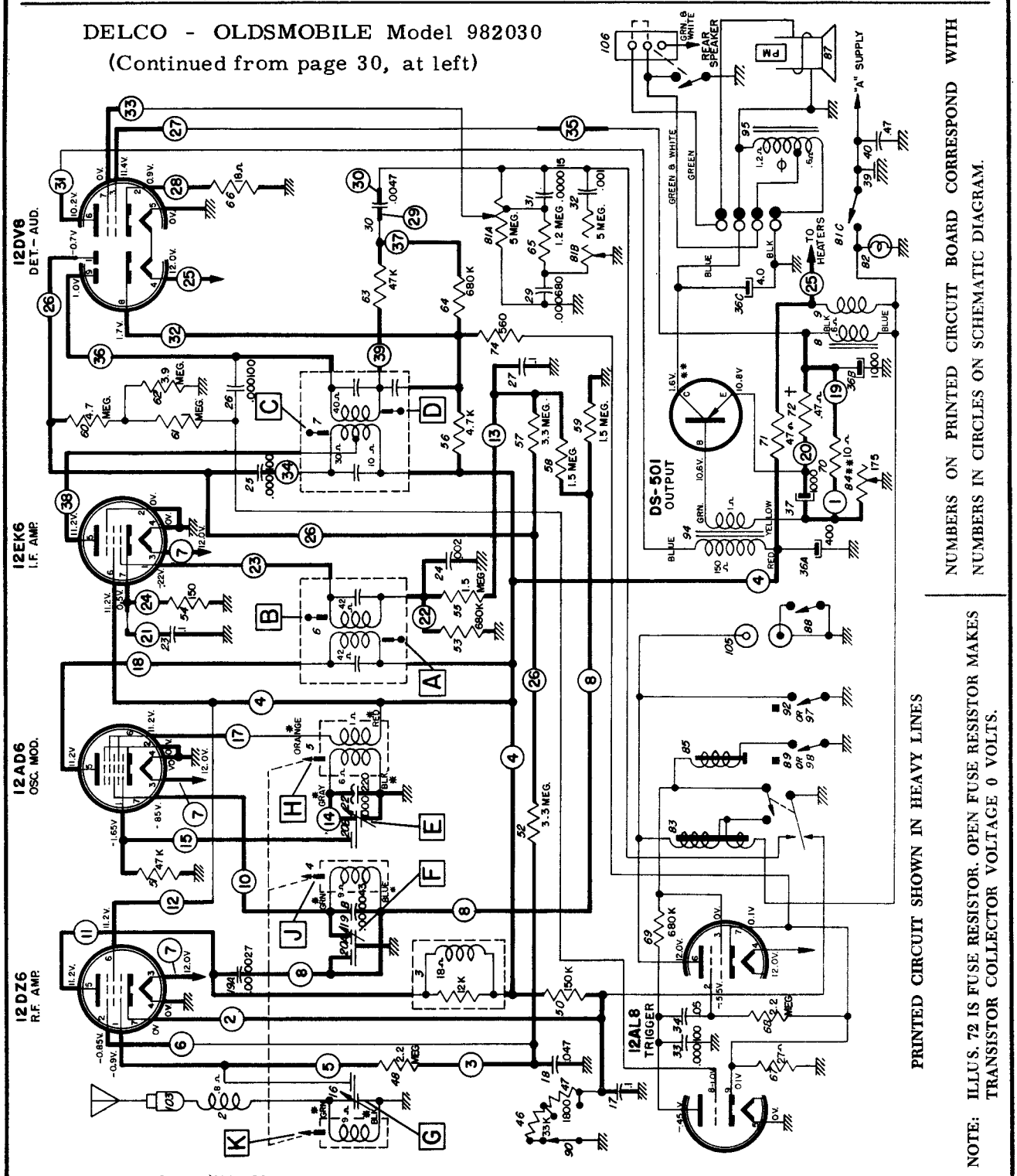

OLDSMOBILE 982030

SCHEMATIC DATA

Oscillator grid voltage taken tuned to 1000 kc.

Total "A" drain 2.6 amperes.

* Indicates lead from tuning coil assembly.

■—F3 and F4 tuner use different switches.

Voltages measured terminal to chassis with a VTVM—No signal—12.0 volts at Illustration #39.

**—Before measuring transistor voltages be sure speaker and transformer are connected to radio. If transistor is replaced adjust bias potentiometer (Illustration #84 to obtain the proper collector voltage.)

† —Illustration #72 is a fuse resistor for the transistors. An open fuse resistor will give 0 volts collector voltage.

⊖—Output transformer may appear shorted if rear speaker control or jumper is not inserted into Illus. #106.

Delco

CHEVROLET RADIO MODEL 985332

CONVAIR Models 985158, 985159, 985189, and 985315 are practically identical to this 985332.

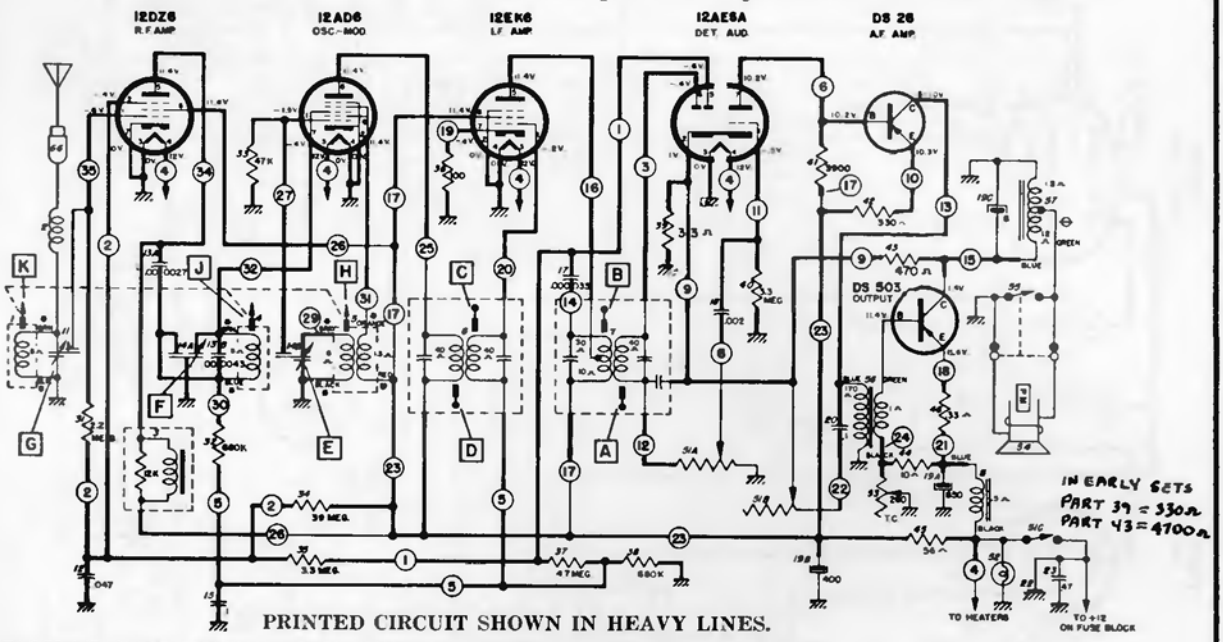

PRINTED CIRCUIT SHOWN IN HEAVY LINES.

VOLTAGES MEASURED TERMINAL TO CHASSIS WITH A VTVM—NO SIGNAL AND 12.0 VOLTS AT ILLUS. 22.

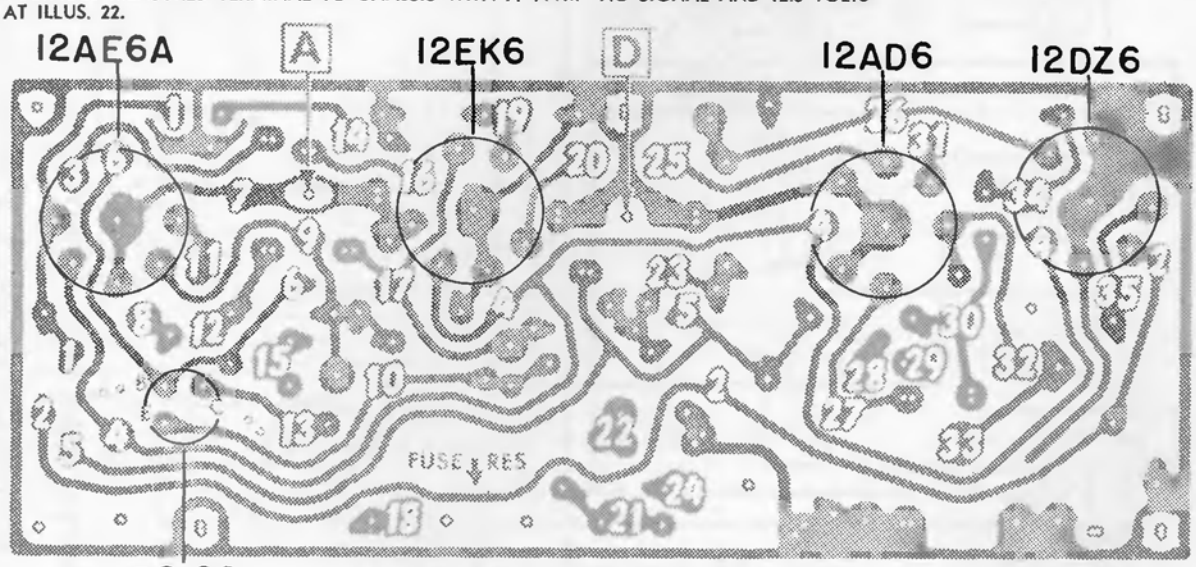

CIRCUIT BOARD (PRINTED VIEW)

STEPS	SERIES CAPACITOR OR DUMMY ANTENNA	CONNECT SIGNAL GENERATOR TO	SIGNAL GENERATOR FREQUENCY	TUNE RECEIVER TO	ADJUST IN SEQUENCE FOR MAX. OUTPUT
1	0.1 Mfd.	12AD6 Grid (Pin #7)	262 KC	High Frequency Stop	A, B, C, D,
2	0.000082 Mfd.	Antenna Connector	1615 KC	High Frequency Stop	*E, F, G,
3	0.000082 Mfd.	Antenna Connector	600 KC	Signal Generator Signal	J, K
4	0.000082 Mfd.	Antenna Connector	1615 KC	High Frequency Stop	F, G

*Before making this adjustment check mechanical setting of oscillator core "H." The rear of the core should be 1⅝" from the mounting end of the coil form. (This measurement is readily made by inserting a suitable plug in the mounting end of the coil form.) Core adjustment should be made with a non-metallic screwdriver.

With the radio installed and the car antenna plugged in adjust the antenna trimmer "G" for maximum volume with the radio tuned to a weak station between 600 and 1000 KC (see sticker on case).

Emerson

MODELS:
888 "TITAN"
888 "GALAXY"
CHASSIS: 120655

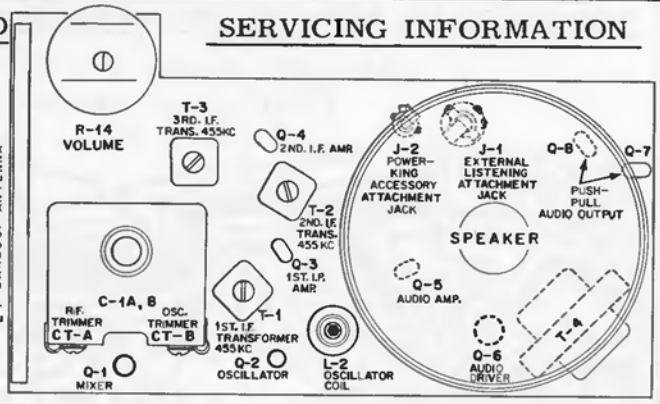

ALIGNMENT POINT LOCATION

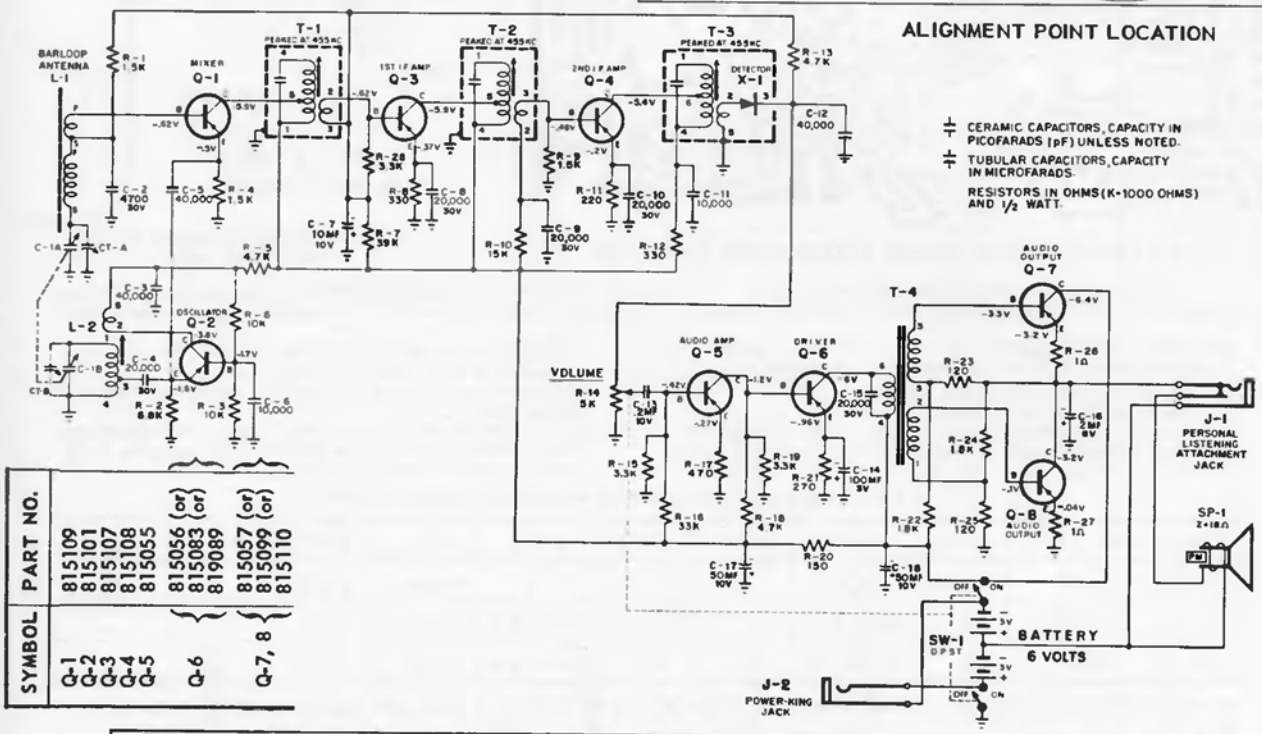

CERAMIC CAPACITORS, CAPACITY IN PICOFARADS (pF) UNLESS NOTED.
TUBULAR CAPACITORS, CAPACITY IN MICROFARADS.
RESISTORS IN OHMS (K=1000 OHMS) AND 1/2 WATT.

SYMBOL	PART NO.
Q-1	815109
Q-2	815101
Q-3	815107
Q-4	815108
Q-5	815055
Q-6	815056 (or) 815083 (or) 819089
Q-7, 8	815057 (or) 815099 (or) 815110

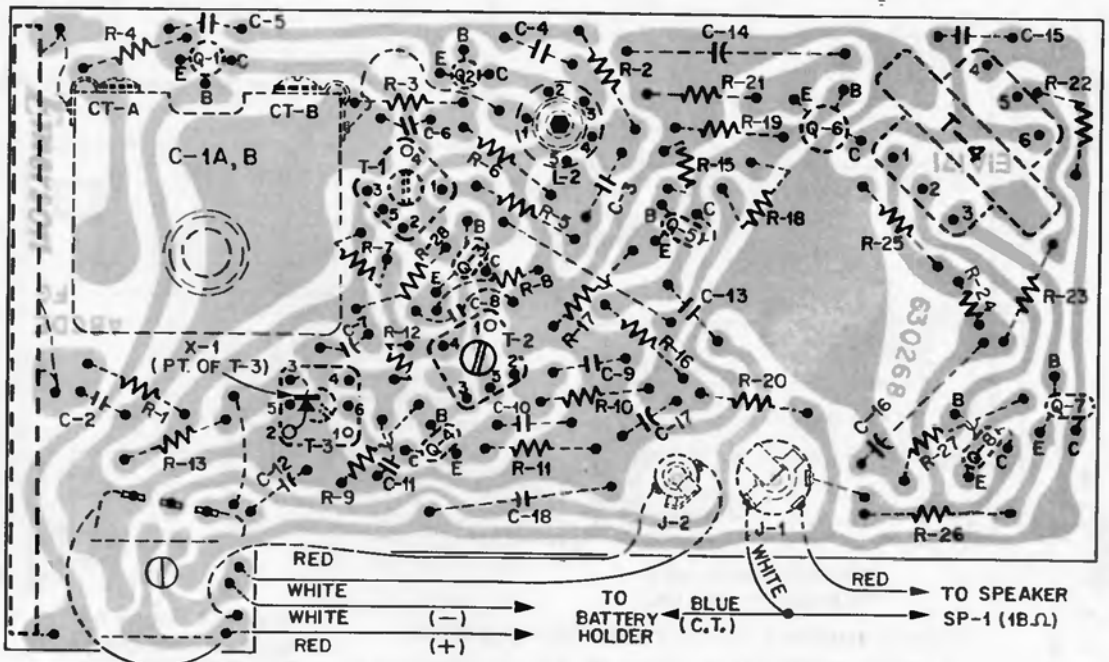

ETCHED PRINTED CIRCUIT, CHASSIS 120655 (BOTTOM VIEW)

EMERSON Models P-1904, P-1905, Chassis 120599B

(Main circuit diagram on page 35, at right)

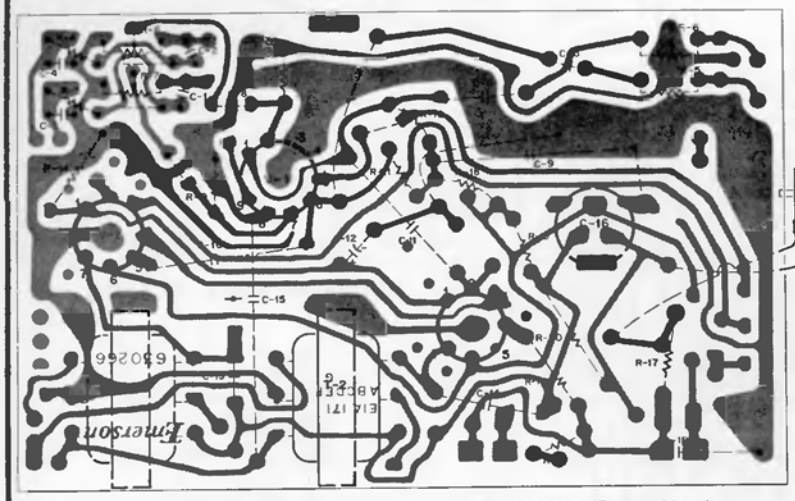

FIG. 2 – ETCHED PRINTED CIRCUIT, CHASSIS 120599B (Bottom View)

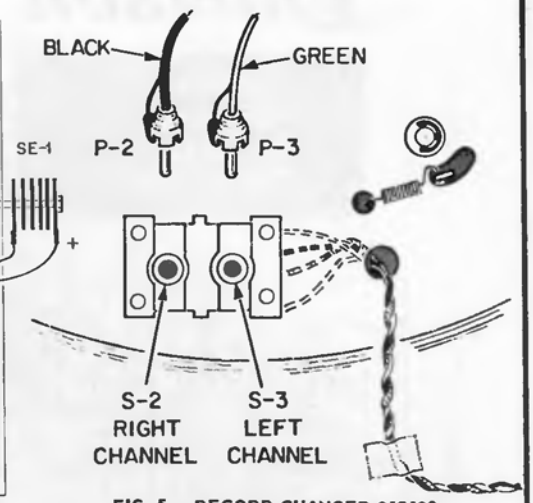

FIG. 5 – RECORD CHANGER 819180, UNDERSIDE VIEW

CONDITIONS FOR VOLTAGE AND RESISTANCE MEASUREMENTS, STEREO AMPLIFIER CHASSIS 120599-B.

VOLTAGE MEASUREMENTS were taken under the following conditions, using an RCA "Voltohmyst" or equivalent VTVM:

1) Line voltage maintained at 115 volts AC.
2) Volume control set for minimum volume.
3) All voltage measurements made between points indicated and B-neutral (negative side of electrolytic capacitor C-16) unless otherwise noted.

RESISTANCE MEASUREMENTS were made under the following conditions, using an RCA "Voltohmyst" or equivalent VTVM:

1) ON-OFF switch (SW-1) in OFF position and line cord disconnected from AC outlet.
2) AC connector for record changer (P-4) disengaged from motor socket (S-4).
3) All resistance measurements made between points indicated and B-neutral (negative side of electrolytic capacitor C-16) unless otherwise noted.

RESISTANCE READINGS, STEREO AMPLIFIER CHASSIS 120599B

SYM.	TUBE TYPE	PIN 1	PIN 2	PIN 3	PIN 4	PIN 5	PIN 6	PIN 7	PIN 8	PIN 9
V-1	12AX7	*570K	6.8 M	0	0	18	*570K	6.8 M	0	9
V-2	50EH5	33	30 to .5 M	18	64	30 to .5 M	*450	*370	–	–
V-3	50EH5	33	30 to .5 M	64	112	30 to .5 M	*450	*370	–	–

* MEASURED WITH COMMON LEAD OF METER CONNECTED TO POSITIVE SIDE OF SELENIUM RECTIFIER SE-1.

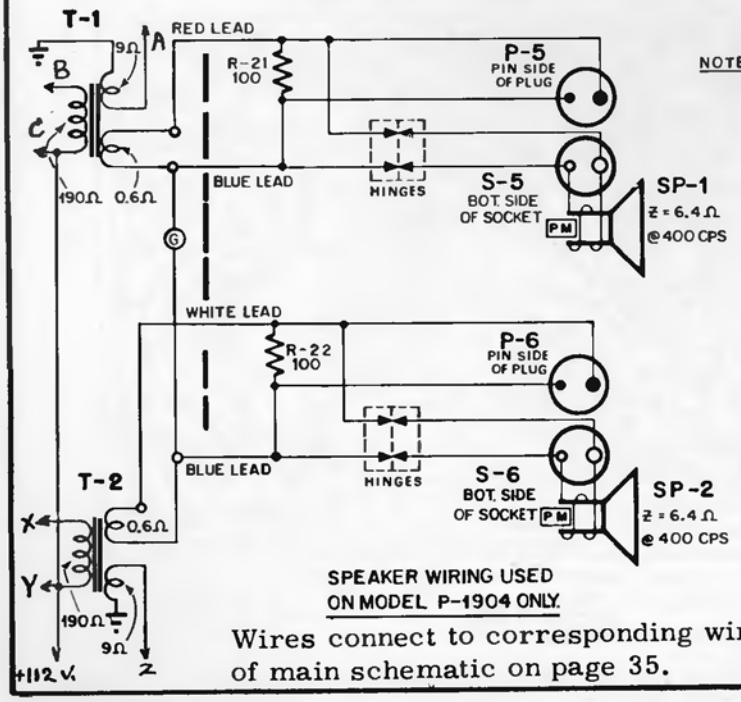

SPEAKER WIRING USED ON MODEL P-1904 ONLY.

NOTE:
CORRECT PHASING OF SPEAKERS MUST BE OBSERVED.

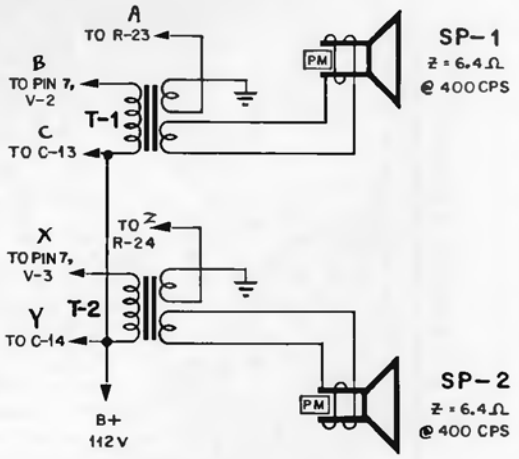

SPEAKER WIRING ON MODEL P-1905 ONLY.

Wires connect to corresponding wires of main schematic on page 35.

EMERSON Chassis 120599B

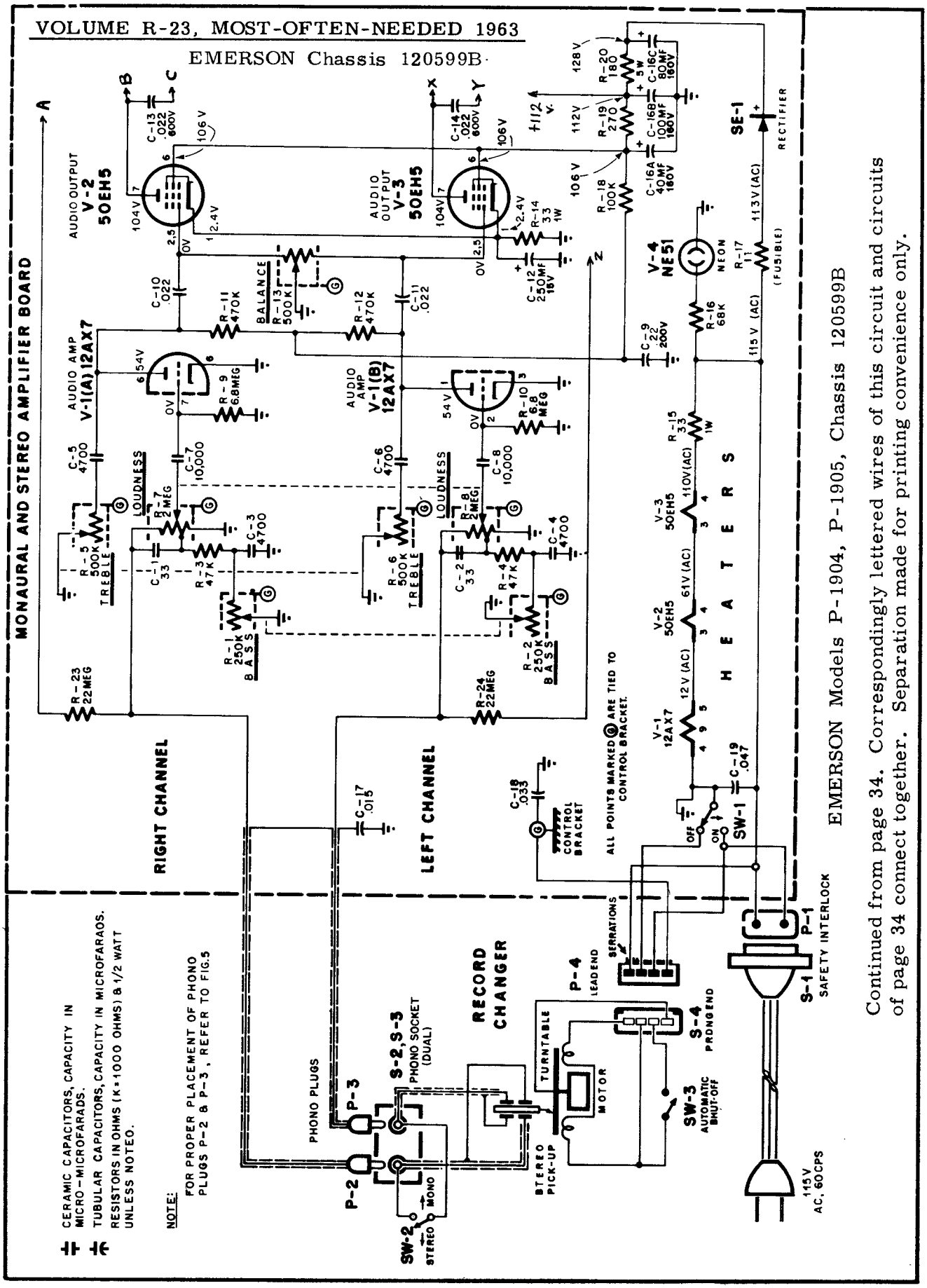

EMERSON Models P-1904, P-1905, Chassis 120599B

Continued from page 34. Correspondingly lettered wires of this circuit and circuits of page 34 connect together. Separation made for printing convenience only.

EMERSON Chassis 120547B, Models P-1908, P-1912

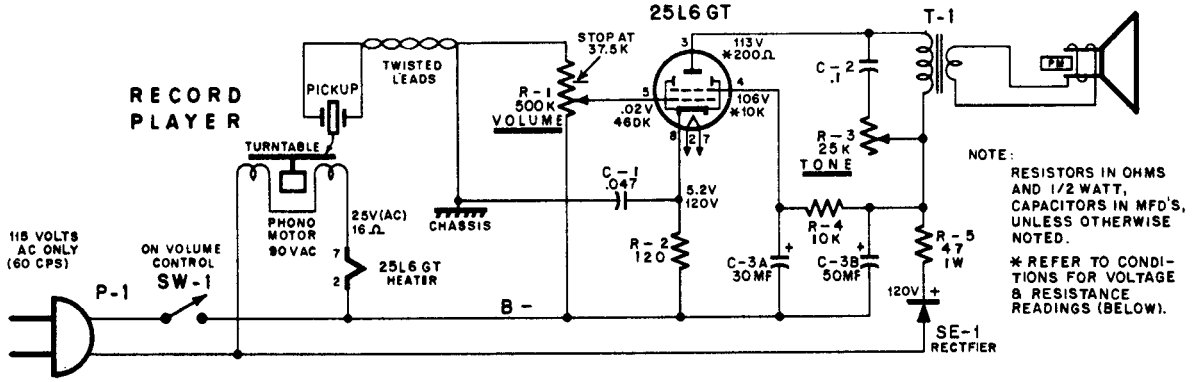

EMERSON Chassis 120548B, Models P-1907A, P-1916

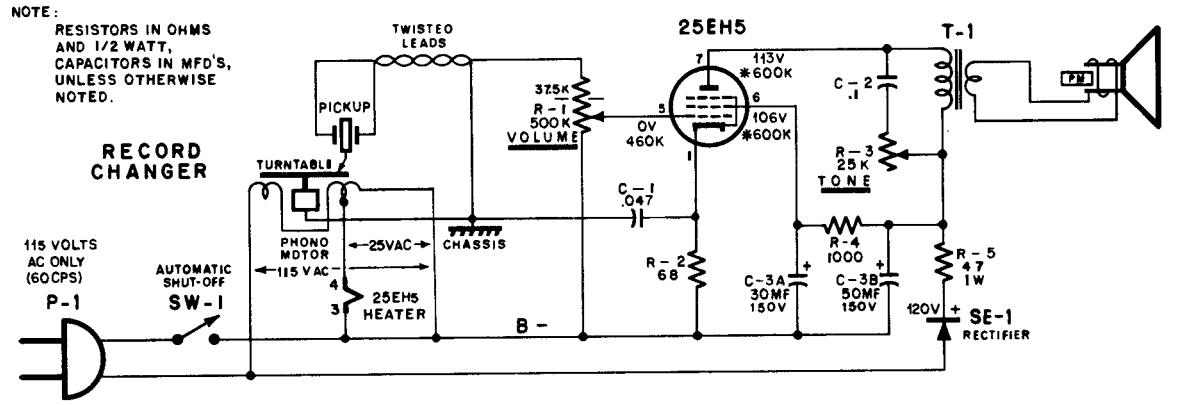

EMERSON Chassis 120558B, Models P-1910, P-1917, P-1918

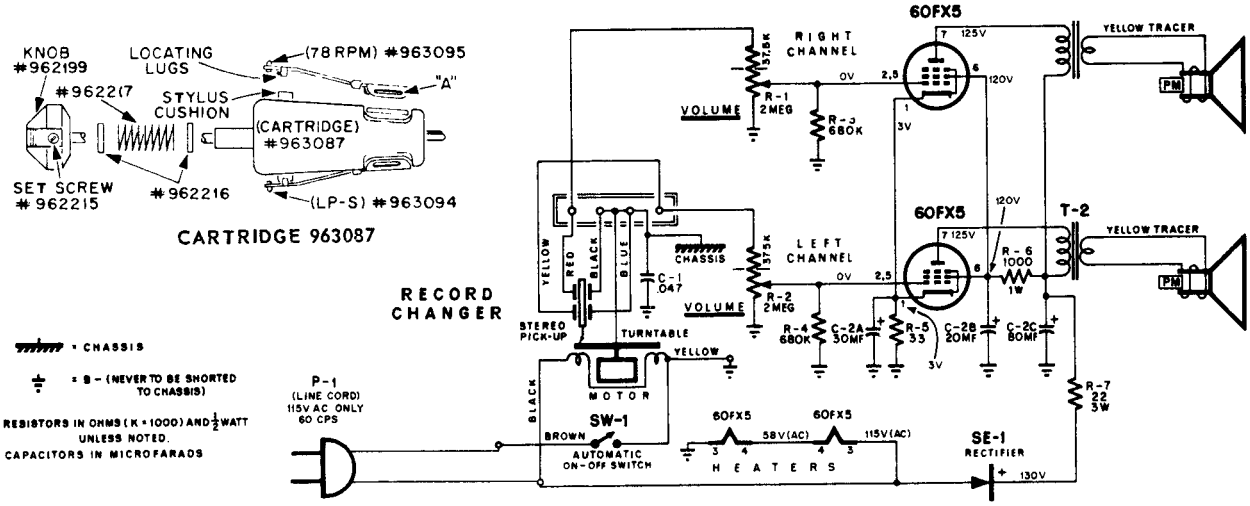

CONDITIONS FOR VOLTAGE AND RESISTANCE READINGS

1. Voltages indicated are positive d.c., resistances in ohms, unless otherwise indicated.
2. Measurements made with voltahmyst or equivalent.
3. All measurements taken from pin to B minus unless otherwise indicated.
4. Voltage measurements taken with:
   a) Line voltage maintained at 115 volts a.c.
   b) Volume control set for maximum volume.
5. Resistance measurements taken with:
   a) Power line cord disconnected from outlet.
   b) Volume control set for maximum volume.
6. Nominal tolerance on component values makes possible a variation of ± 15% in voltage and resistance readings.
7. N.C. denotes no connection, K is kilohms, Meg. is megohms.
8. Resistances marked with * vary due to capacitor charge. Allow about 30 seconds for meter to settle.

GENERAL ELECTRIC

MODEL T160A

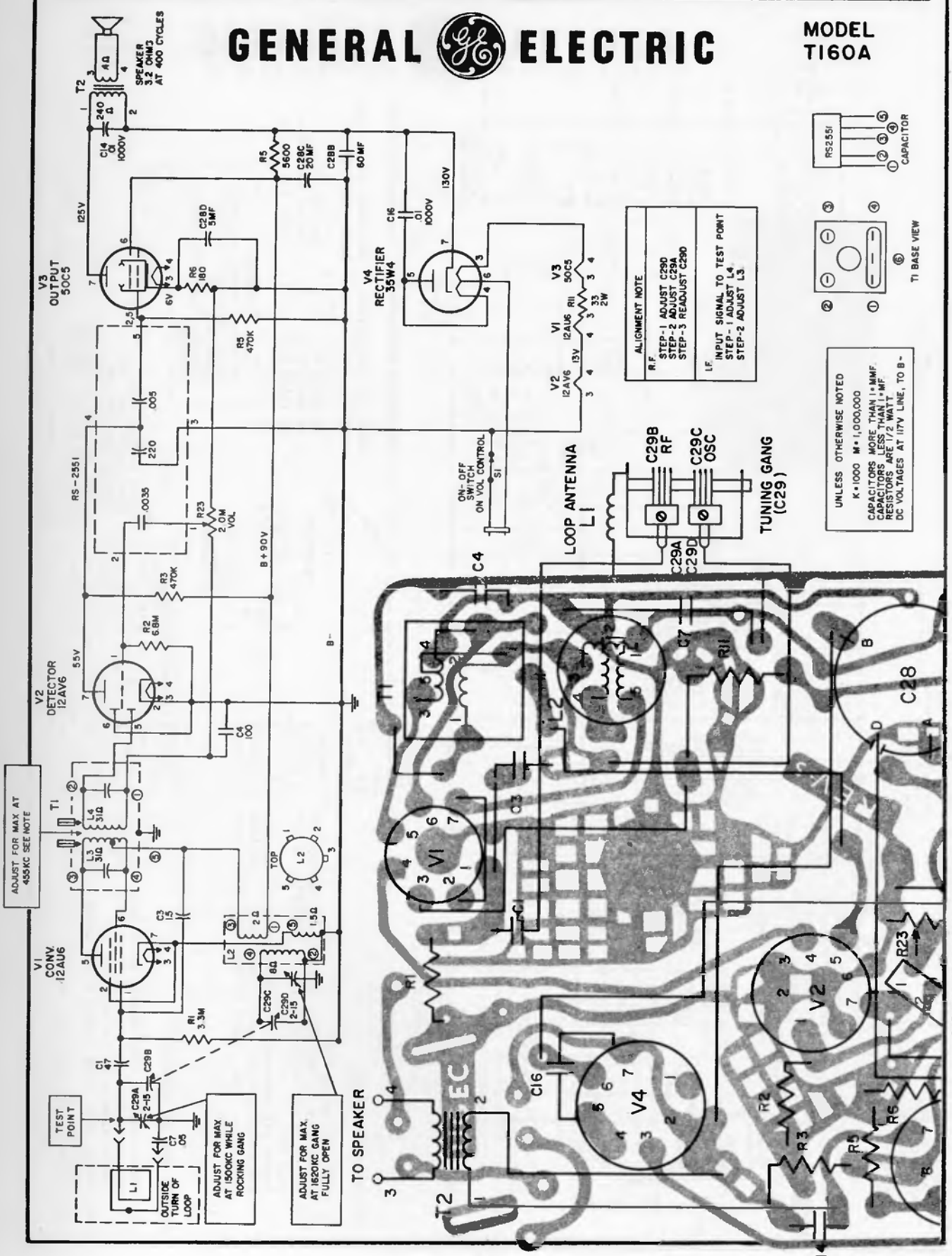

COMPONENT WIRING DIAGRAM

GENERAL ELECTRIC

Radio Models R310A R315A

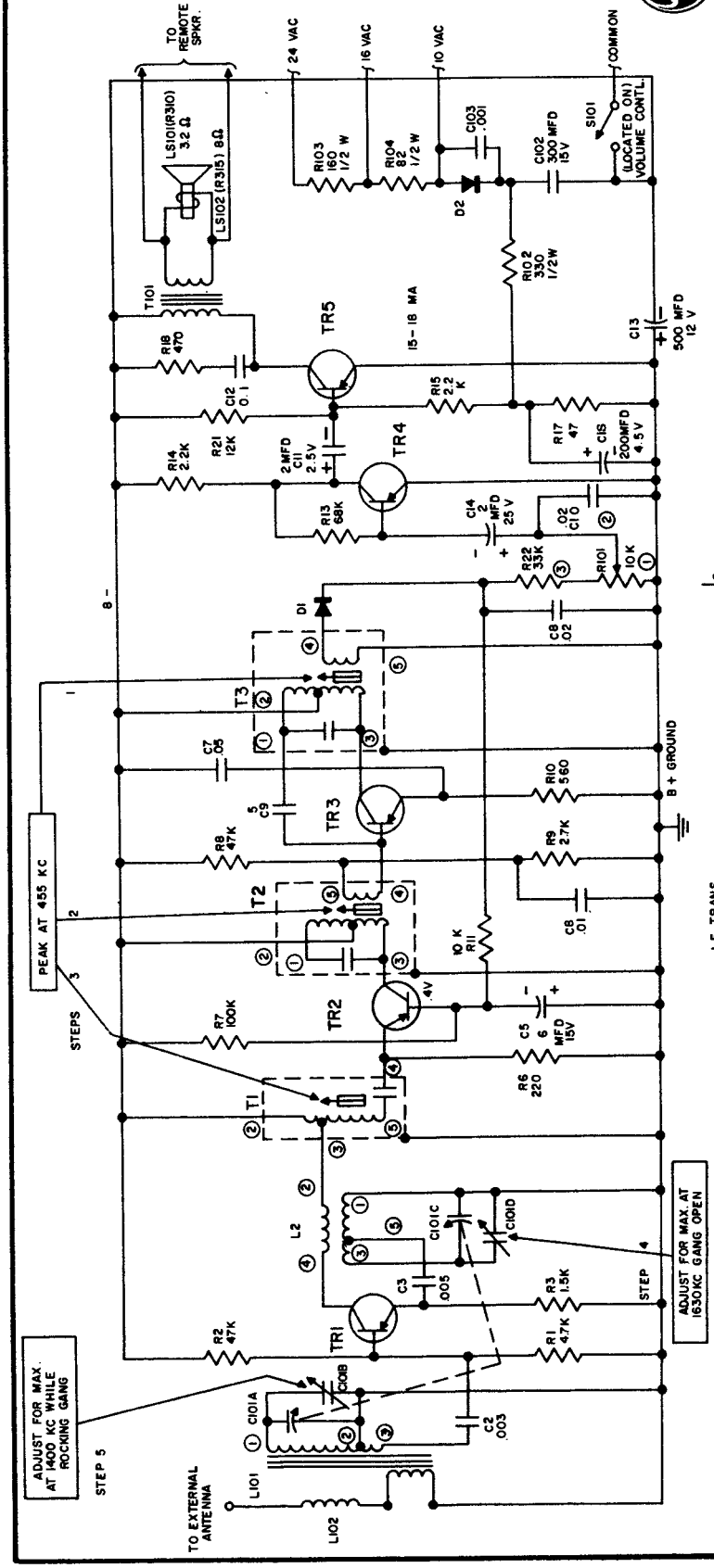

COLOR CODE FOR DIFFERENT TRANSFORMER OUTPUTS

When the transformer supplies:	Use Power Leads From Radio Colored:
10 Volts A.C.	Red and White
16 Volts A.C.	Yellow and White
24 Volts A.C.	Green and White

ALIGNMENT

SET VOLUME CONTROL AT MAXIMUM. CONNECT OUTPUT METER OR SCOPE ACROSS VOICE COIL. INDUCTIVELY COUPLE SIGNAL GENERATOR TO RECEIVER.

REMOTE SPEAKER
R315A ONLY

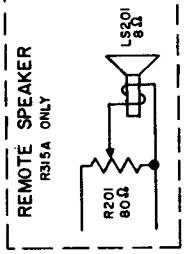

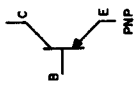

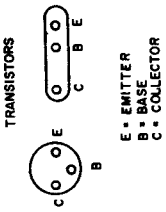

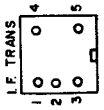

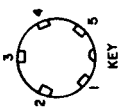

NOTES:
1. UNLESS OTHERWISE NOTED: CAPACITORS MORE THAN 1 • MMF CAPACITORS LESS THAN 1 • MF RESISTORS ARE 1/4 WATT AND K • 1000
2. VOLTAGES & CURRENT READINGS ARE AVERAGE UNDER NO SIGNAL CONDITIONS. VOLTAGES ARE NEGATIVE WITH RESPECT TO GROUND.
3. REPLACE WITH TRANSISTOR TYPES SHOWN.

AVERAGE QUIESCENT TRANSISTOR VOL.

	TR1	TR2	TR3	TR4	TR5
E	.89	.31	.21	0	0
B	.84	.5	.37	.19	.19
C	7.4	7.4	7.4	2.8	7.0

DISASSEMBLY

MASTER RADIO REMOVAL

1. Pull off tuning knob.
2. Remove four screws which are used at the top and bottom of the cabinet to secure the radio to the wall box.
3. Remove all wire nuts from transformer, antenna, and remote station leads, carefully labeling each wire. Then remove the master radio from the wall.

REMOTE STATION REMOVAL

1. Remove the two knurled-head bolts appearing in the upper left and lower right corners on the remote station escutcheon.
2. Remove wire nuts from wires going to the speaker.
3. Remove remote unit from the wall.

GENERAL ELECTRIC

MODELS
C410A
C411A

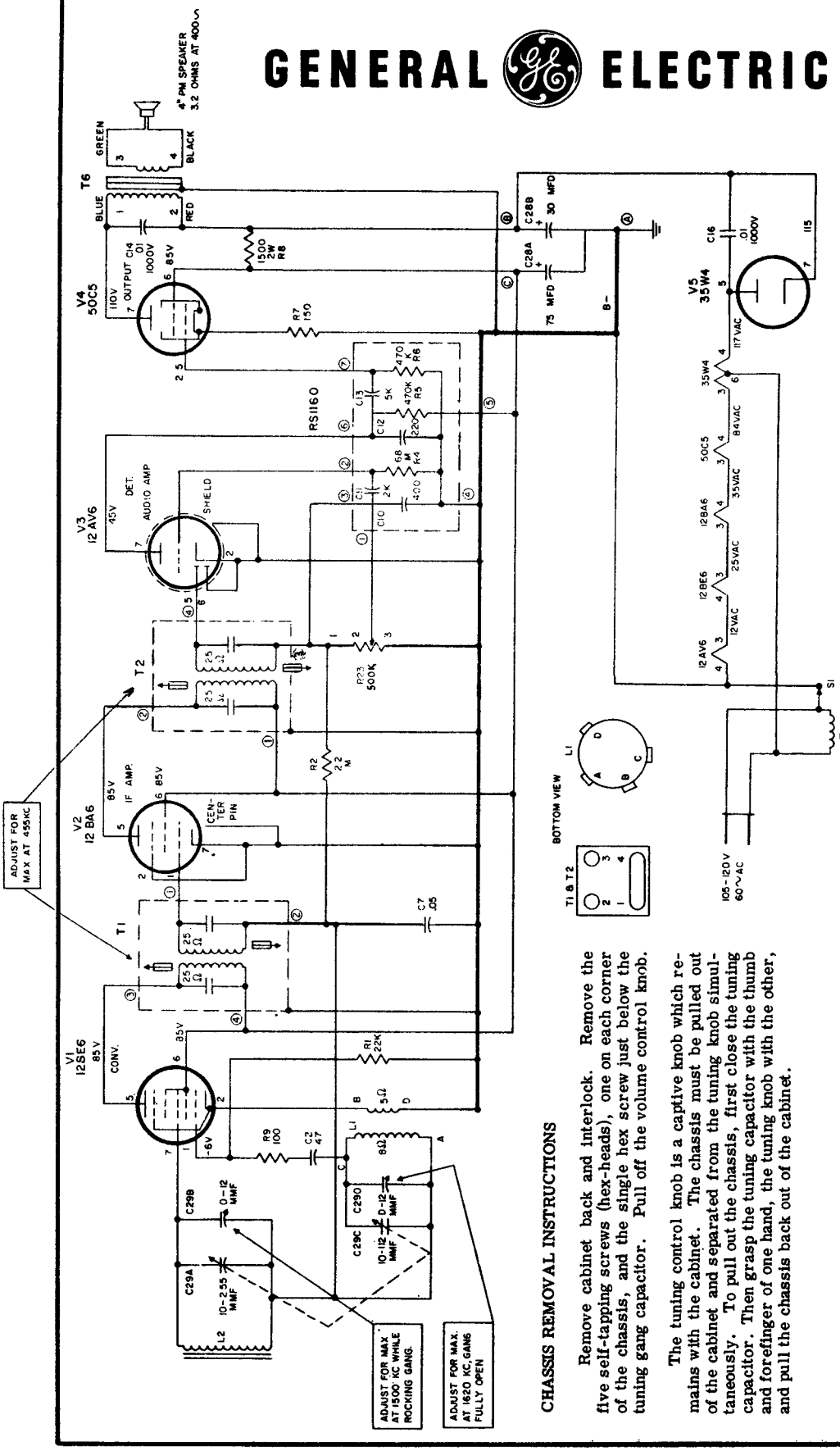

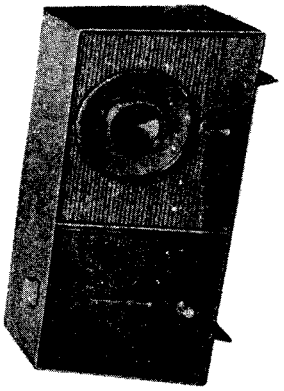

model C410A

CHASSIS REMOVAL INSTRUCTIONS

Remove cabinet back and interlock. Remove the five self-tapping screws (hex-heads), one on each corner of the chassis, and the single hex screw just below the tuning gang capacitor. Pull off the volume control knob.

The tuning control knob is a captive knob which remains with the cabinet. The chassis must be pulled out of the cabinet and separated from the tuning knob simultaneously. To pull out the chassis, first close the tuning capacitor. Then grasp the tuning capacitor with the thumb and forefinger of one hand, the tuning knob with the other, and pull the chassis back out of the cabinet.

REPLACEMENT OF COMPONENTS

After removing a defective part, the mounting holes should be cleaned of all solder. The replacement part can be inserted more easily and a better soldering connection can be accomplished. It is important to use extreme care while soldering on this chassis. Only apply the soldering iron long enough to melt the solder and pull out the part being replaced. Too much heat on the chassis will cause the copper plating to become unbonded. Since too much heat may damage a component or unbond the copper pattern, a soldering iron of approximately 35 watts maximum is recommended.

GENERAL ELECTRIC

Models C465A, C466A, C467A

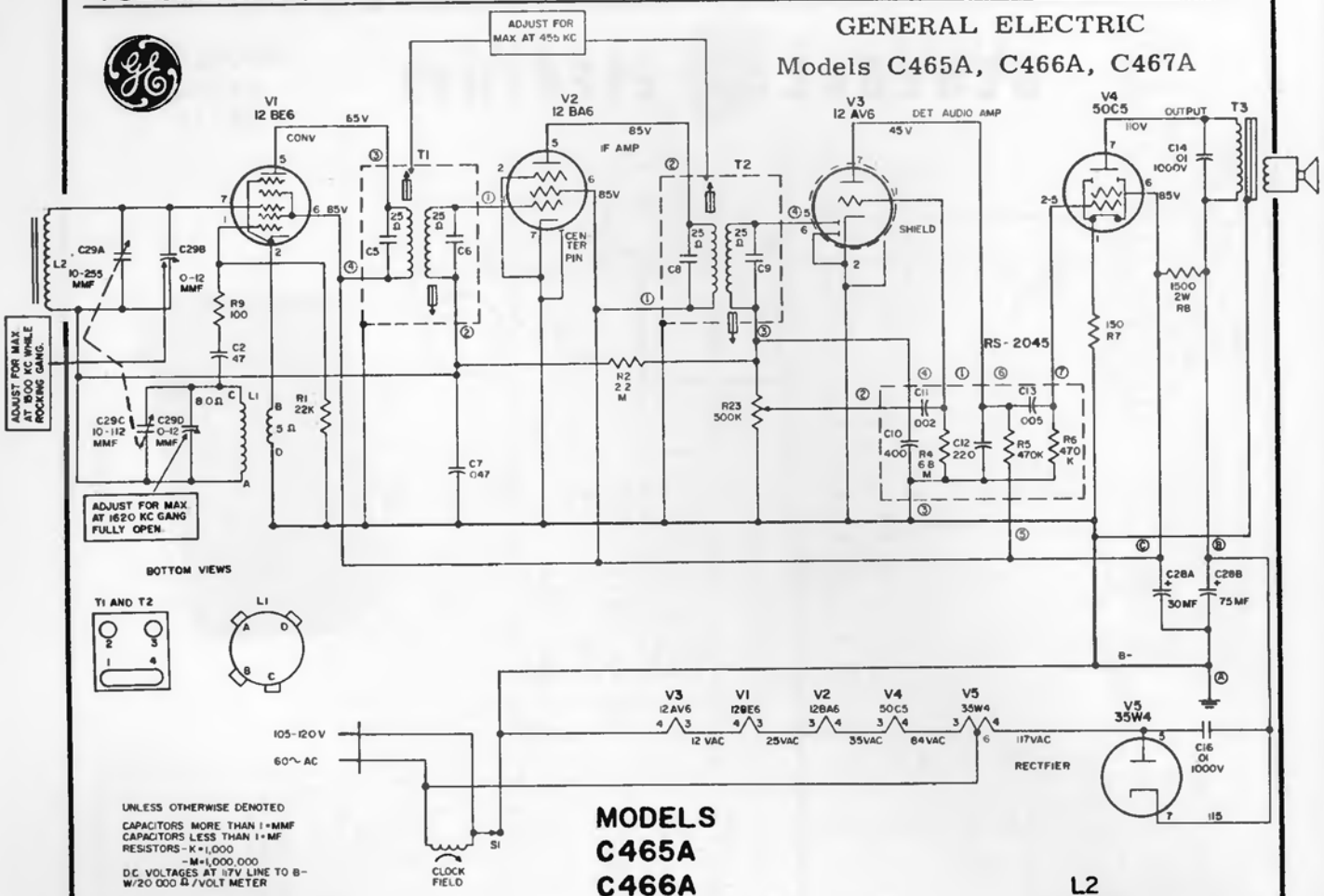

MODELS
C465A
C466A
C467A

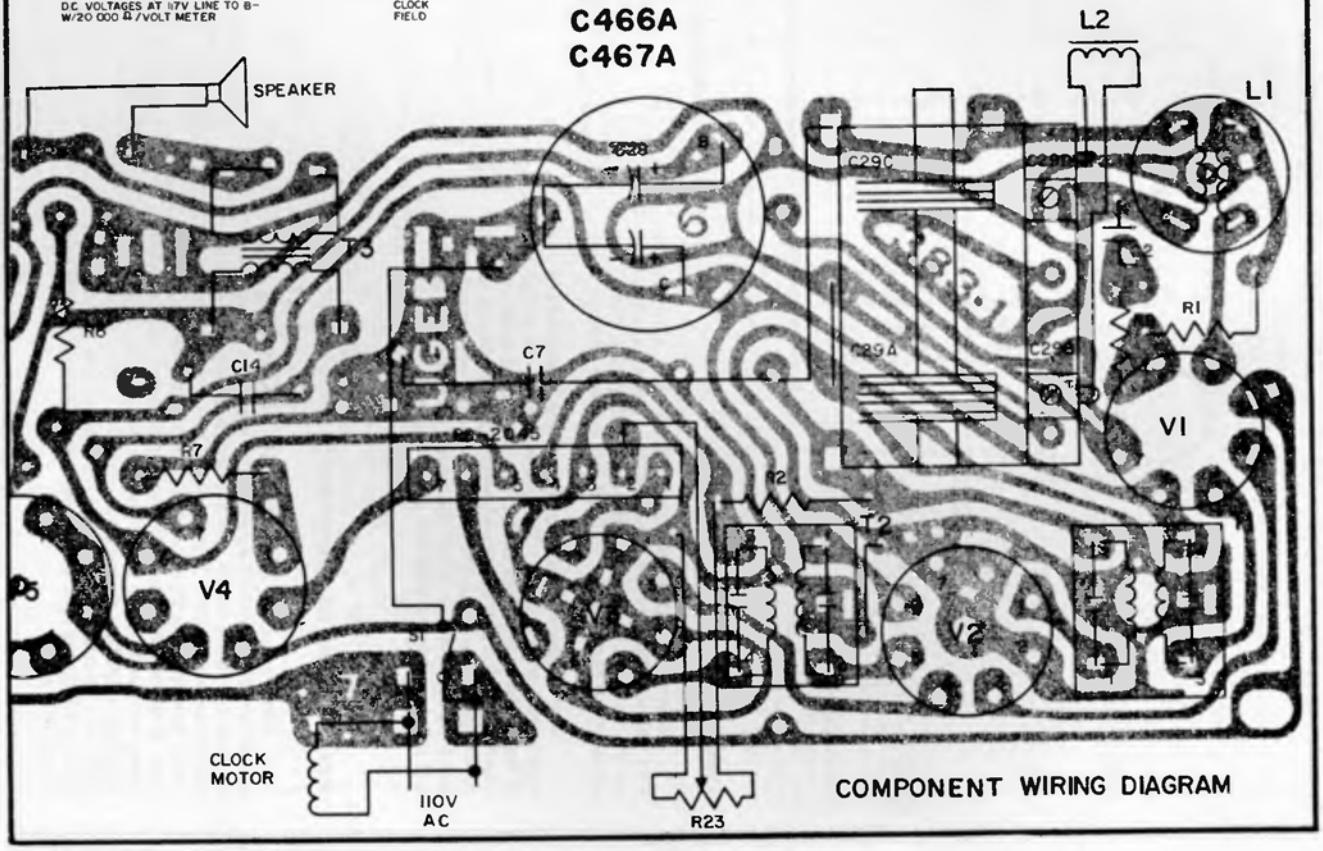

COMPONENT WIRING DIAGRAM

GENERAL ELECTRIC

RADIO MODEL C470A

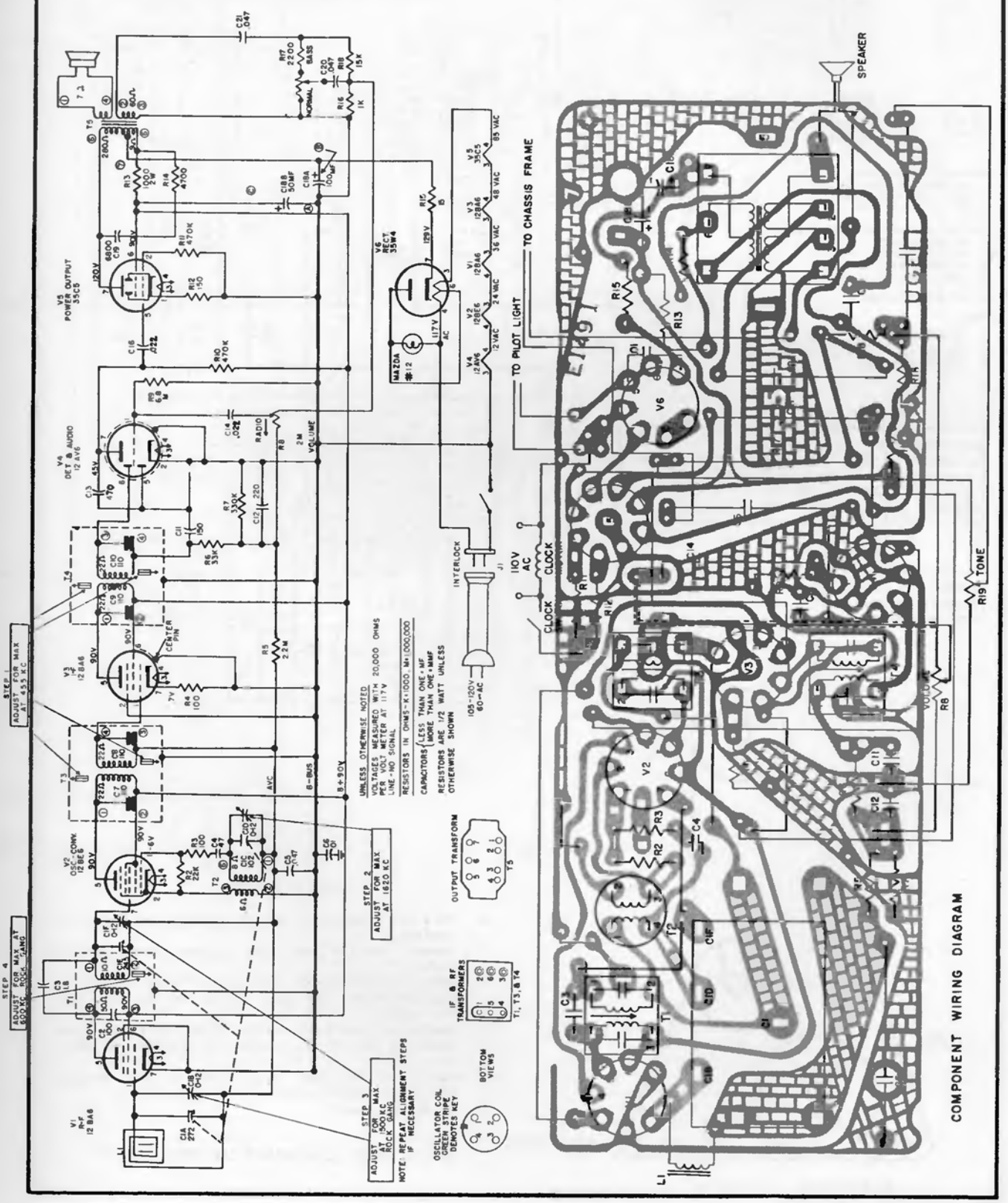

GENERAL ELECTRIC Models T245A, T246A, T250A, T255A, T256A, C525A

BOTTOM VIEWS

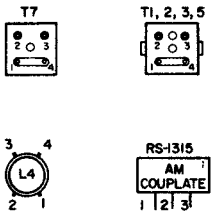

DETECTOR RC COUPLATE

UNLESS OTHERWISE NOTED:
K=1,000 M=1,000,000
CAP. MORE THAN 1 = MMF
CAP. LESS THAN 1 = MF

VOLTAGE READING TAKEN WITH-VTVM
1. 120 VOLT AC INPUT
2. SET IN FM POSITION
3. VOLUME CONTROL AT MIN.
4. TUNING GANG SET TO 108 MC

* SET IN AM POSITION

NOTE:
1. USED ON T250 AND T255 ONLY.
2. USED ON T250, T255 AND C525 ONLY.
3. USED ON T246, T250 AND T255 ONLY.
4. USED ON C525 ONLY.

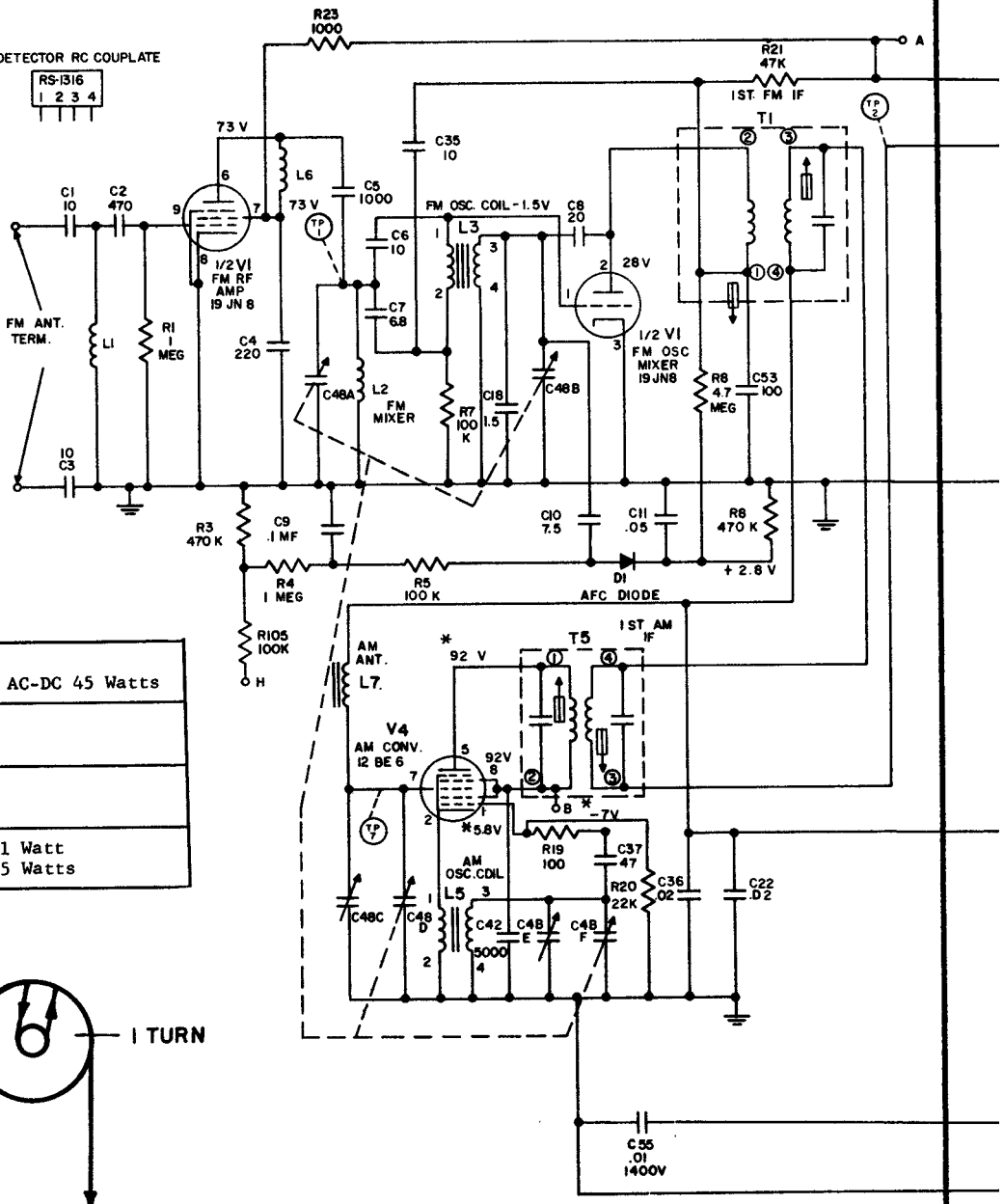

ELECTRICAL RATING:	105 - 120 Volt AC-DC 45 Watts
TUNING RANGE:	AM 540-1600 KC FM 88-108 MC
I. F. :	AM 455KC FM 10.7MC
POWER OUTPUT:	Undistored: 1 Watt Maximum: 1.5 Watts

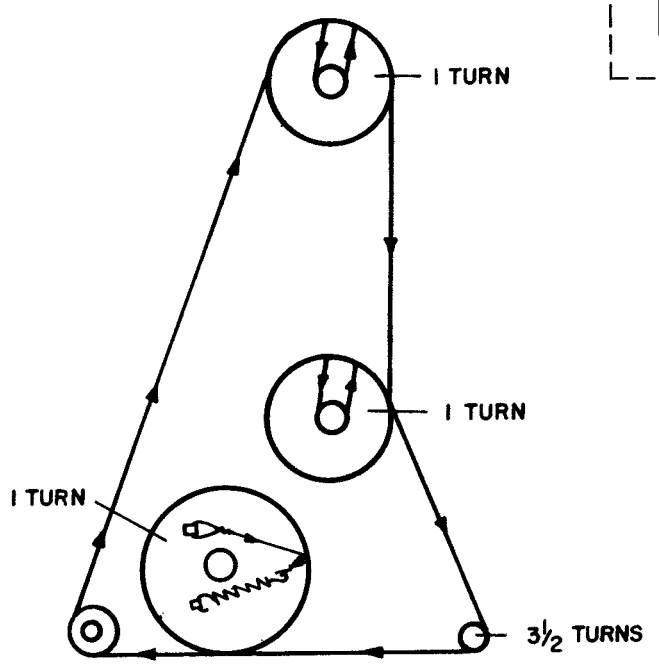

STRINGING DIAGRAM

CHASSIS REMOVAL

1. Pull all knobs off control shafts on front of cabinet.
2. Remove two 1/4" hex-head screws from cabinet back.
3. Lift right hand side of cabinet back, disengaging interlock, and then slide out to the right and out.
4. Remove six hex-head screws from cabinet bottom securing chassis and output transformer to cabinet.
5. Label and unsolder wires going to the speaker and pilot light bulbs.
6. Slide out chassis.

(Diagram continued to next page)

GENERAL ELECTRIC Models T245A, T246A, T250A, T255A, T256A, C525A

(Diagram and material continued from preceding page, at left)

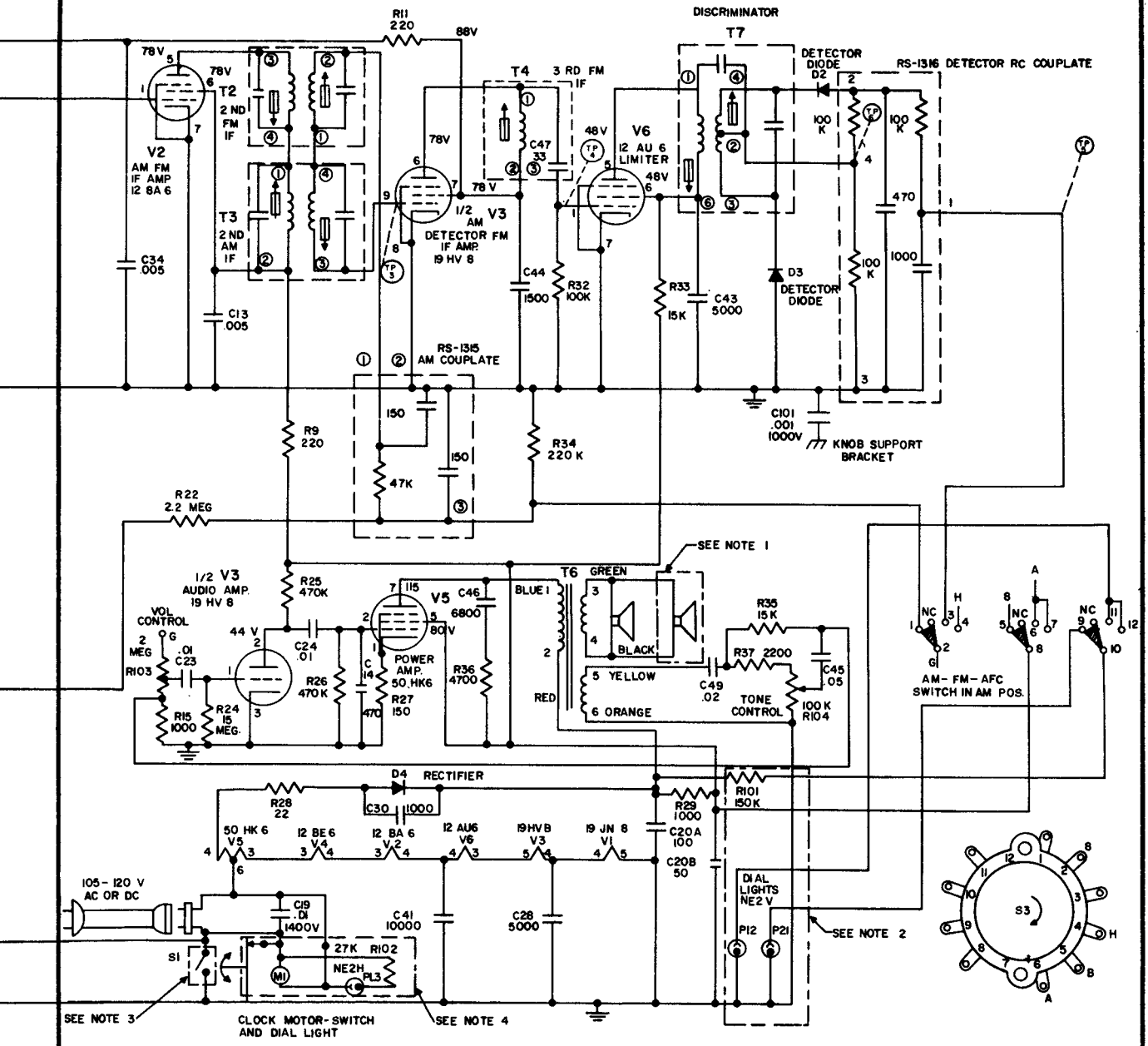

FM OSCILLATOR COIL

The FM oscillator coil, L3, may require adjustment if components, other than tubes, are changed in the FM oscillator-mixer section. Check the band end frequencies. If the set tunes through 108 and 88 MC do not touch the coil. If the oscillator frequency is low, adjust L3 by spreading the turns slightly. (This raises the dial reading.) If the oscillator frequency is high adjust L3 by squeezing the turns together slightly. (This lowers the dial reading.)

NOTE: A small change in the space between any 2 turns of L3 shifts the frequency approximately 1 MC.

PILOT LIGHTS

NOTE: Radio model C-525 uses a type NE-2V bulb for band indication and dial lighting. A type NE-2H bulb is used for the clock face lighting. Since the NE-2H requires a higher firing voltage, it should never be substituted for the NE-2V bulb, since there is no assurance that the former will light on DC. Also, the NE-2V bulb cannot be used in series with the 27K resistor (R102) as too much voltage would be placed across the bulb, severely limiting its life.

GENERAL ELECTRIC

Model P845A

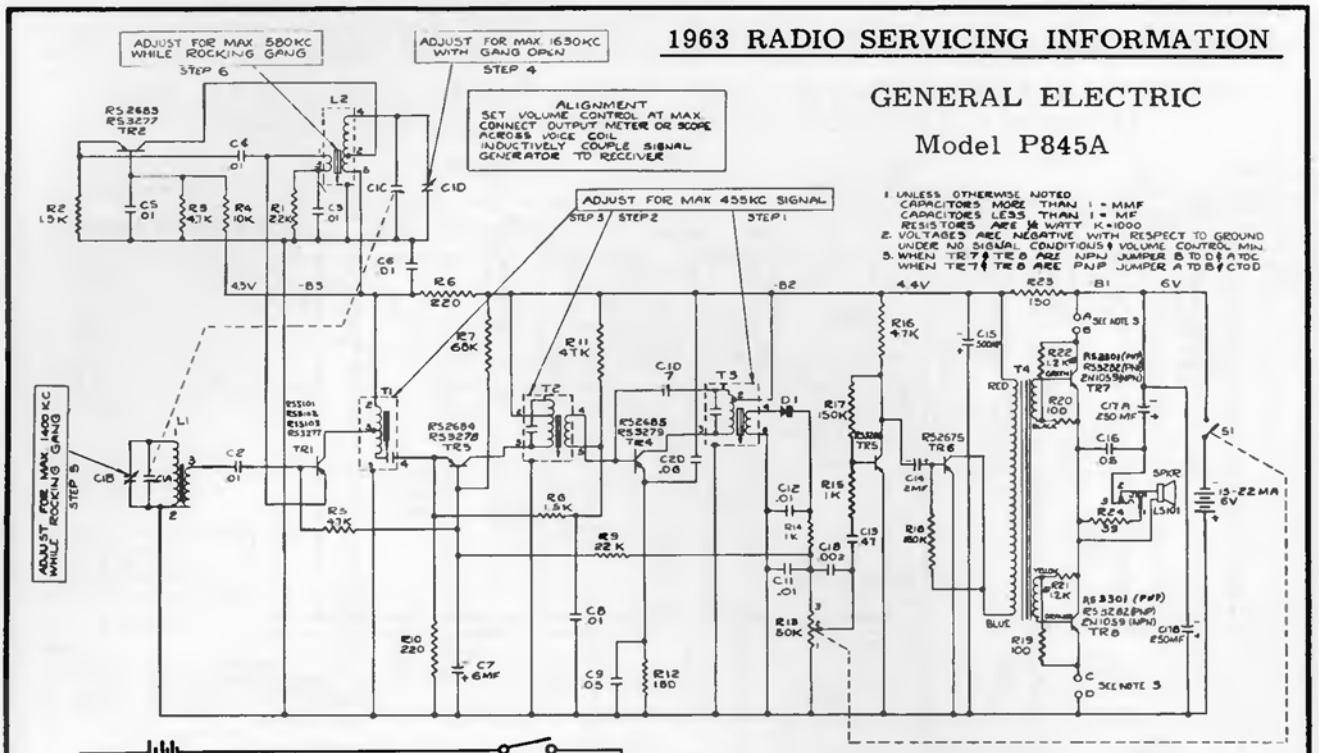

(Additional material on next page)

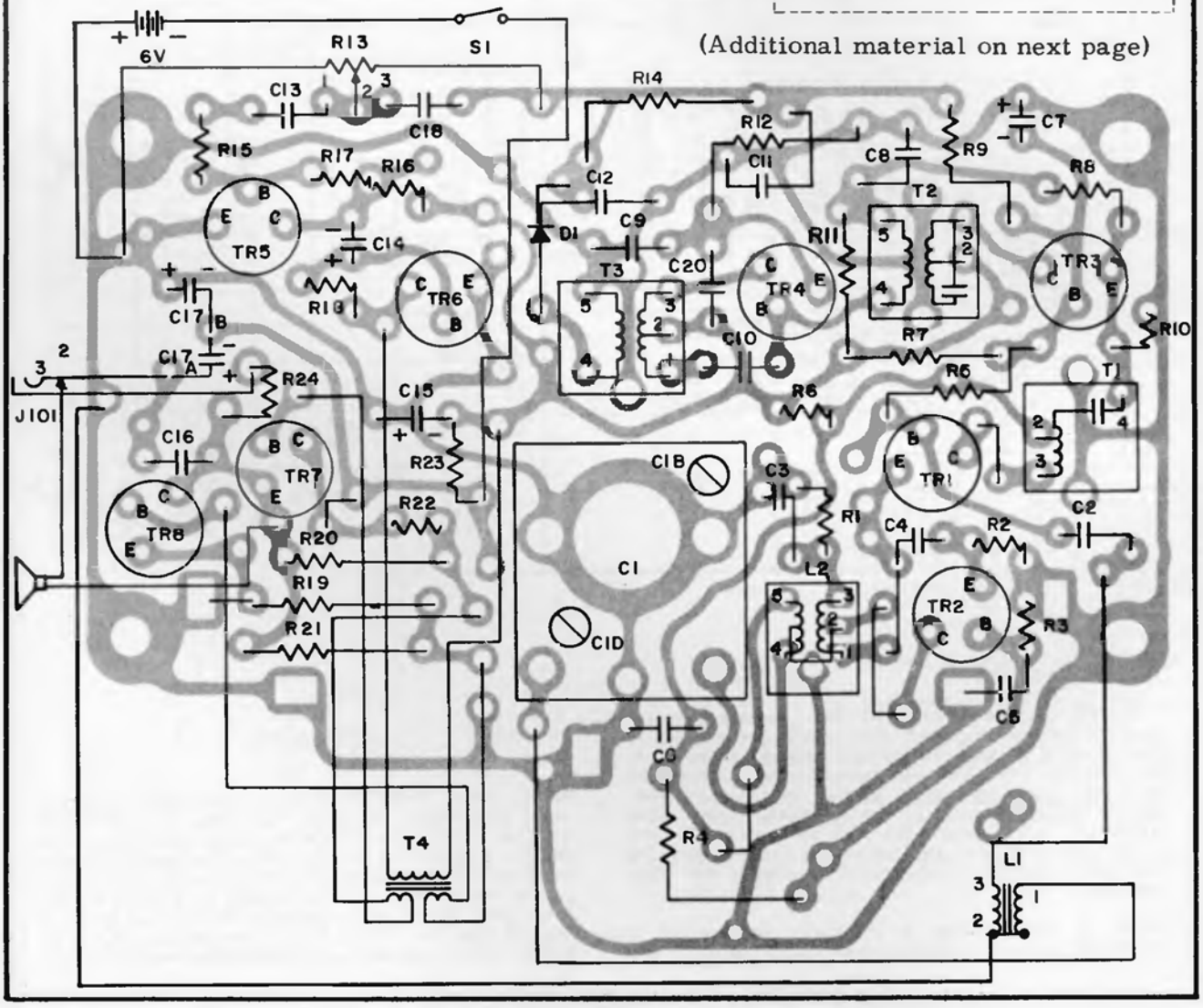

GENERAL ELECTRIC

Model P845A

(Material continued)

TRANSISTOR MTG. PATTERN

CHASSIS REMOVAL

1. Remove two phillips head screws located on the cabinet back.
2. Remove the screw holding the battery compartment door and remove the penlite batteries.
3. Remove the two phillips head screws located beneath the extreme right and left batteries.
4. Lift off cabinet back and remove four 1/4" hex-head bolts from the circuit board.
5. Carefully lift out chassis from cabinet.

TABLE OF TRANSISTOR VOLTAGES

		EMITTER	BASE	COLLECTOR	FUNCTION
TR1		.4	.45	4.8	MIXER
TR2		9.5	.98	4.5	OSCILLATOR
TR3		2.5 to .45	.42 to .55	4.4	1st I.F. AMPLIFIER
TR4		.2 to .4	.35 to .5	4.4	2nd I.F. AMPLIFIER
TR5		0	.1 to .2	1 to 2.2	AUDIO AMPLIFIER
TR6		0	.2	4.2	AUDIO DRIVER
TR7	NPN	2.9	2.7	0	PUSH PUSH AUDIO OUTPUT
	PNP	2.9	3.1	6	
TR8	NPN	6	5.8	2.9	
	PNP	0	.2	2.9	

I.F. TRANSFORMER (OSC. COIL)

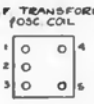

GENERAL ELECTRIC

Models P820C, P821C, P822C

CATALOG NO.	SYMBOL	DESCRIPTION	PRICE
*-RS-5101	TR1	Osc. Converter.....	2.10
*-RS-5201	TR2	1st I.F.....	2.10
*-RS-5301	TR3	2nd I.F.....	2.10
*-RS-5504	TR4	Driver.....	2.10
*-RS-5704	TR5, TR6	Outputs.....	2.10

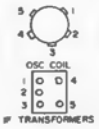

NOTES
1. UNLESS OTHERWISE NOTED
   CAPACITORS MORE THAN 1 = UUFD
   CAPACITORS LESS THAN 1 = UFD
   RESISTORS ARE 1/2 WATT AND K=1000
2. VOLTAGES & CURRENT READINGS ARE AVERAGE UNDER NO SIGNAL CONDITIONS VOLTAGES ARE NEGATIVE WITH RESPECT TO GROUND
3. REPLACE TRANSISTORS BY CATALOG NUMBERS LISTED IN PARTS LIST

ALIGNMENT
SET VOLUME CONTROL AT MAXIMUM
CONNECT OUTPUT METER OR SCOPE ACROSS VOICE COIL
INDUCTIVELY COUPLE SIGNAL GENERATOR TO RECEIVER

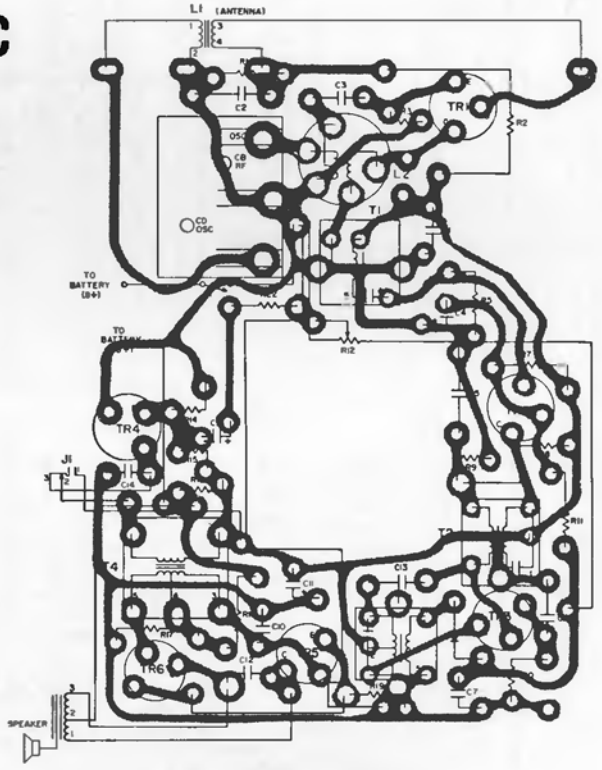

COMPONENT WIRING DIAGRAM

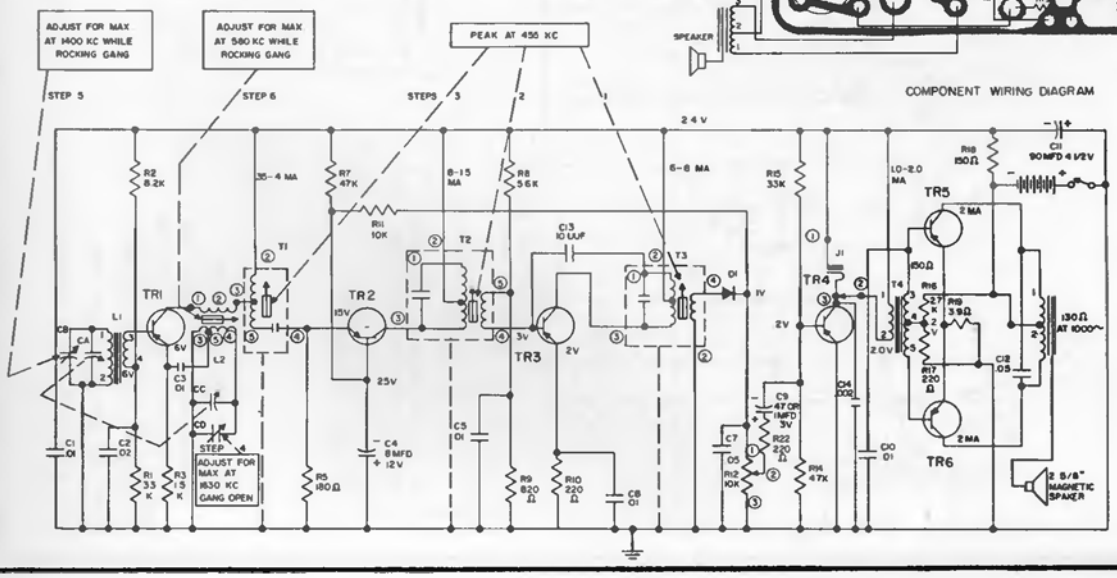

GENERAL ELECTRIC

MODELS
P810A
P811A

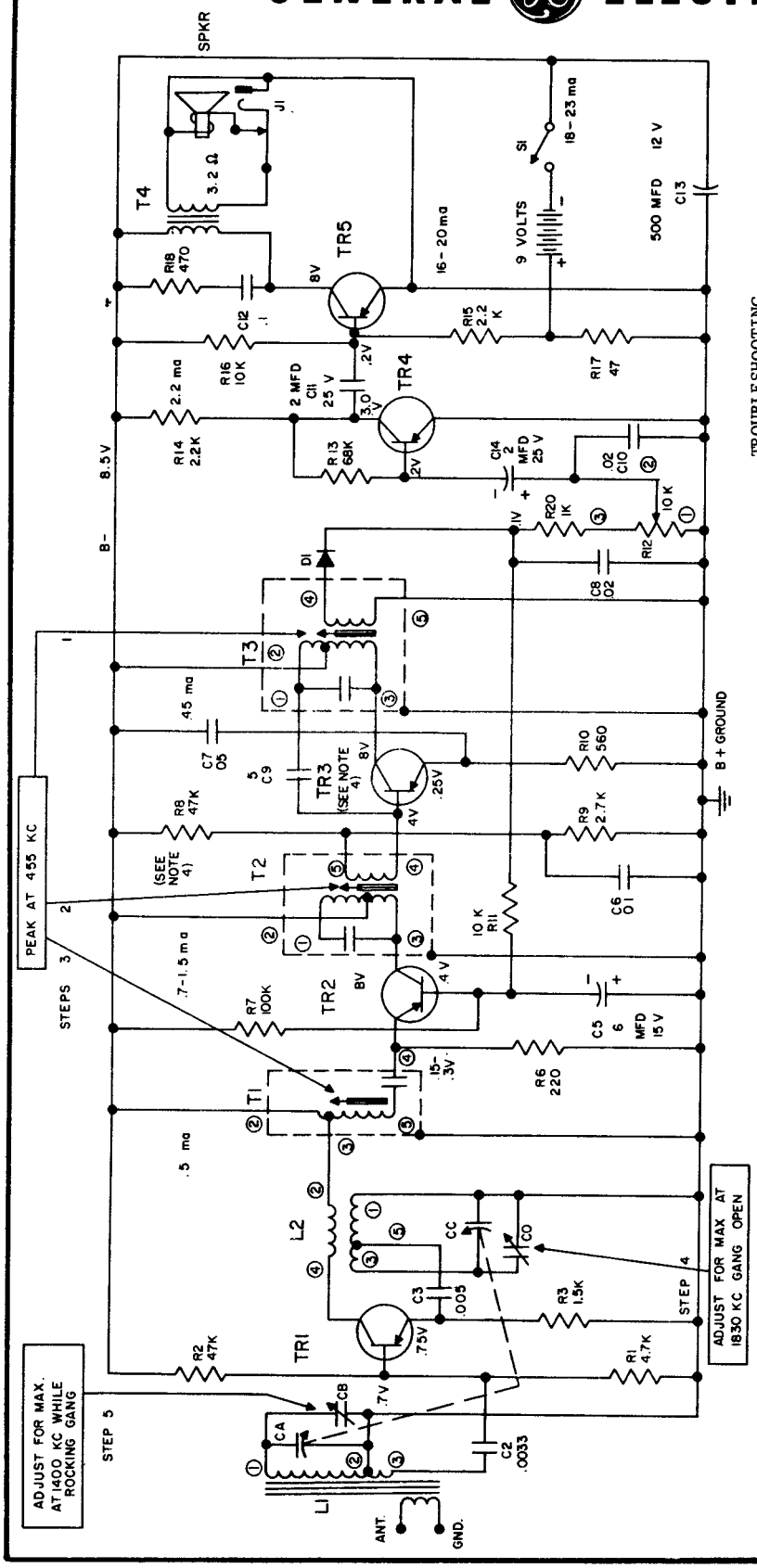

TROUBLESHOOTING

A check of battery condition and total current drain of the receiver should be made first. All current measurements are made at quiescence with the receiver turned on, volume control at minimum, tuning gang closed, and with no-signal conditions.

The total quiescent receiver current drain is from 18 to 23 ma. This is measured by inserting a milliammeter in series with the batteries.

If an excessive total quiescent current drain is recorded, the individual collector currents of each transistor should be checked. An excessive current reading may mean a shorted transistor; no current will indicate that a transistor or associated circuit component is defective.

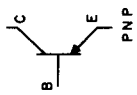

TRANSISTORS

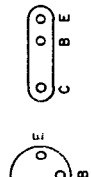

E = EMITTER
B = BASE
C = COLLECTOR

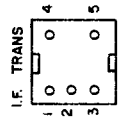

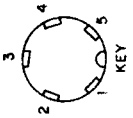

BOTTOM VIEWS

ALIGNMENT

SET VOLUME CONTROL AT MAXIMUM. CONNECT OUTPUT METER OR SCOPE ACROSS VOICE COIL. INDUCTIVELY COUPLE SIGNAL GENERATOR TO RECEIVER.

NOTES:

1. UNLESS OTHERWISE NOTED: CAPACITORS MORE THAN 1 = MMF CAPACITORS LESS THAN 1 = MF RESISTORS ARE 1/4 WATT AND K = 1000
2. VOLTAGES AND CURRENT READINGS ARE AVERAGE UNDER NO SIGNAL CONDITIONS. VOLTAGES ARE NEGATIVE WITH RESPECT TO GROUND.
3. REPLACE WITH TRANSISTOR TYPES SHOWN IN PARTS LIST.
4. R8 IS 33K WHEN TR3 IS RS-5304.

GENERAL ELECTRIC

MODELS
P852A
P853A
P8522A
P8523A

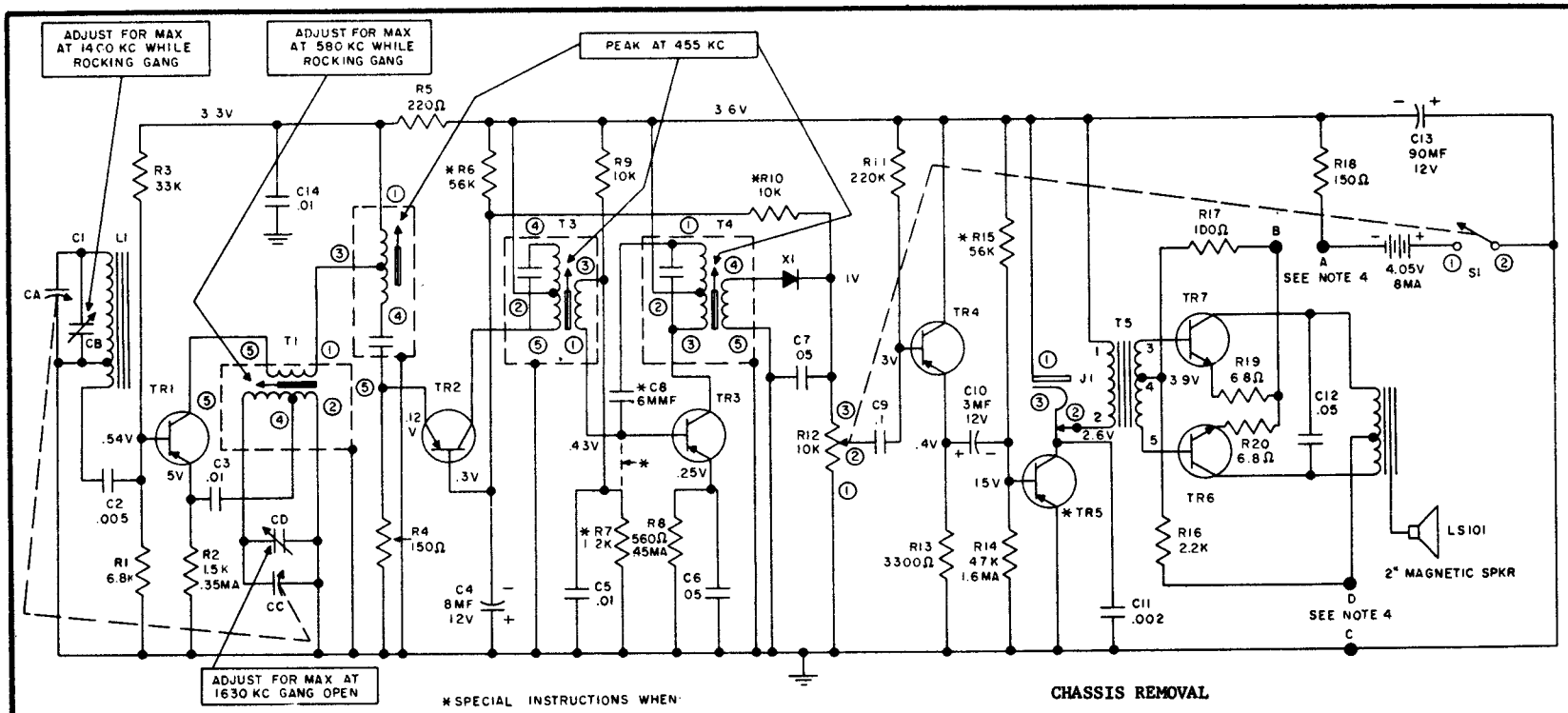

ALIGNMENT

SET VOLUME CONTROL AT MAXIMUM
CONNECT OUTPUT METER OR SCOPE ACROSS VOICE COIL
INDUCTIVELY COUPLE SIGNAL GENERATOR TO RECEIVER

*SPECIAL INSTRUCTIONS WHEN:
TR1 IS RS 3322
TR2 IS RS 3323
TR3 IS RS 3324
TR5 IS RS 3316-1 OR 2
R6 - 39K
R7 - 1.5K CONNECTED FROM GRND TO BASE OF TR3
R10 - 6.8K
R15 {-39K WHEN TR5 IS RS 3316-1 OR RS 3310 / -56K WHEN TR5 IS RS 3316-2}

C8 - DELETE

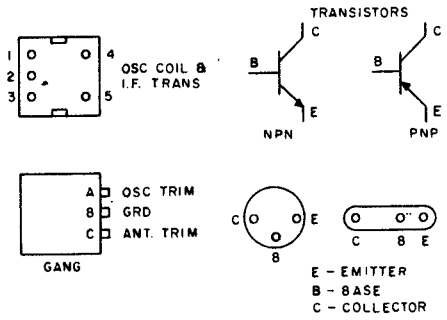

NOTES

1. UNLESS OTHERWISE NOTED:
   CAPACITORS MORE THAN 1 = MMF
   CAPACITORS LESS THAN 1 = MF
   RESISTORS ARE 1/4 WATT & K = 1000
2. VOLTAGES & CURRENT READINGS ARE AVERAGE UNDER NO SIGNAL CONDITIONS. VOLTAGES ARE NEGATIVE WITH RESPECT TO GROUND.
3. REPLACE WITH TRANSISTOR TYPES SHOWN, OR ORDER BY CATALOG NUMBER AS LISTED IN PARTS LISTS.
4. TR6 & 7 NPN - CONNECT C TO D & A TO B.
   TR6 & 7 PNP - CONNECT A TO D & C TO B.
5. SCHEMATIC SHOWN FOR GRP 1 TRANSISTORS.

CHASSIS REMOVAL

1. Remove cabinet back (with 1/8" tip screwdriver).
2. Remove two hex-head screws holding circuit board to cabinet front (with 1/8" Xcelite P4 spintite or equivalent).
3. Remove earphone jack by unscrewing knurled nut counterclockwise on cabinet top.
4. Tilt up volume control side of chassis board and lift out of cabinet front.

NOTE: Earphone jack must be inserted through fishpaper insulator and bushings before mounting jack to cabinet.

TROUBLESHOOTING

A check of battery condition and total current drain of the receiver should be made first. All current measurements are made at quiescence with the receiver turned on, volume control at minimum, tuning gang closed, and with no-signal conditions.

The total receiver current drain is 8 to 12 mils. This is measured by inserting a milliammeter in series with the batteries.

If an excessive total current drain is recorded, the individual collector currents of each transistor should be checked.

TRANSISTOR LIST

	GROUP 1	GROUP 2
TR1	RS2690	RS3322
TR2	RS2691	RS3323
TR3	RS2692	RS3324
TR4	RS3308	RS3308
	RS2697	RS2697
TR5	RS2689	RS3316-1
		RS3316-2
		RS3310
TR6 }	2N1059	2N1059
TR7 }	RS3318	RS3318

GENERAL ELECTRIC

MODEL P871A

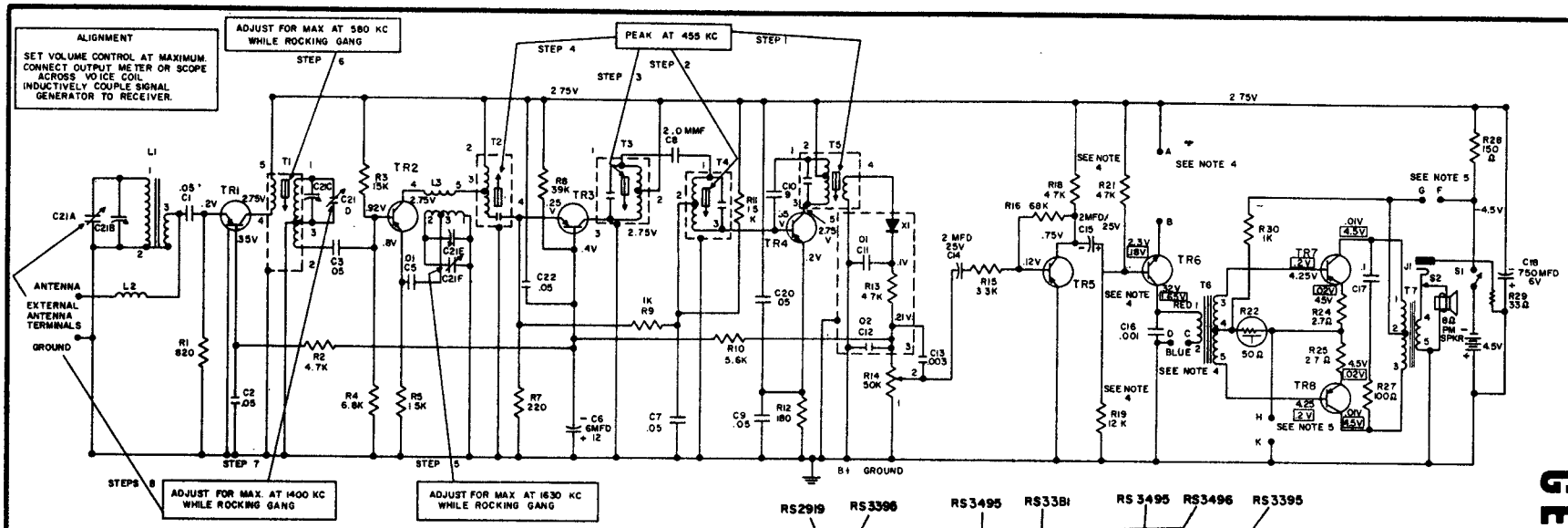

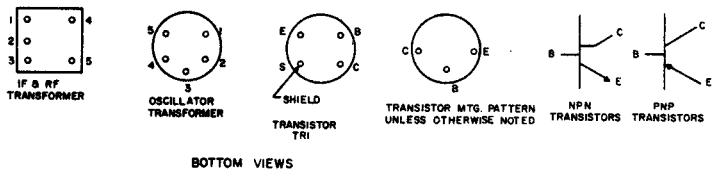

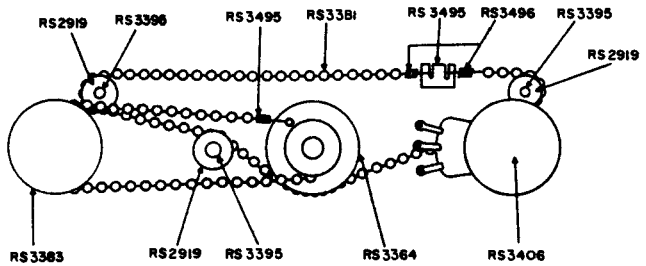

DIAL CHAIN DIAGRAM

NOTES:

1. UNLESS OTHERWISE NOTED CAPACITORS MORE THAN 1 MMF CAPACITORS LESS THAN 1 MF RESISTORS ARE 1/4 WATT & K=1000
2. VOLTAGES & CURRENT READINGS ARE AVERAGE UNDER NO SIGNAL CONDITIONS. VOLTAGES ARE NEGATIVE WITH RESPECT TO GROUND
3. REPLACE WITH TRANSISTOR TYPES SHOWN, OR ORDER BY CATALOG NUMBER AS LISTED IN PARTS LIST
4. WHEN TR6 IS PNP SWITCH VALUES OF R21 AND R19, CONNECT C TO A & B TO D
5. WHEN TR7 & TR8 ARE NPN's, CONNECT G TO K & H TO F.
6. WHEN TR7 & TR8 ARE PNP's, CONNECT G TO F AND H TO K.
7. VOLTAGES SHOWN IN ▭ ARE WITH RESPECTIVE TRANSISTORS PNP
8. C15 IS SHOWN WITH THE POLARITY REQUIRED WHEN TR6 IS PNP. REVERSE C15 POLARITY WHEN TR6 IS NPN.

CHASSIS REMOVAL

1. Remove four screws holding cabinet back to cabinet front.
2. Remove screw holding battery compartment door to cabinet bottom.
3. Slide out cabinet back and clip stand.
4. Remove volume knob and lockwasher.
5. Remove 3 hex-head screws securing circuit board to brackets.
6. Unsolder all connecting leads going to board.

TROUBLESHOOTING

A check of battery condition and total current drain of the receiver should be made first. All current measurements are made at quiescence with the receiver turned on, volume control at minimum, tuning gang closed, and with no signal conditions.

The total receiver current drain is 25 to 30 mils. Current drain is measured with the receiver in the off position and a milliammeter inserted across S1.

An excessive current reading may mean a shorted transistor; no current will indicate that a transistor or associated circuit component is defective.

NO RECEPTION:
1. Check battery voltage and battery contacts.
2. Check on-off switch.
3. Check all antenna lead connections.
4. Check coil L3.

WEAK AUDIO:
1. Check battery voltage for 4.5 volts (B+ Ground).
2. Check receiver current.
3. Check alignment.

INTERMITTENT:
1. Check battery contacts for corrosion.
2. Check solder connections on dip-soldered side of circuit board.

ALIGNMENT

A built-in antenna is used in the carrying handle of this radio model. Best sensitivity will be obtained when the handle is swung away from the cabinet. At about a 45° angle away from the cabinet, you will feel the handle slip into a notch, or detent. This is the proper antenna position for RF alignment and maximum sensitivity.

GENERAL ELECTRIC
Model P885B

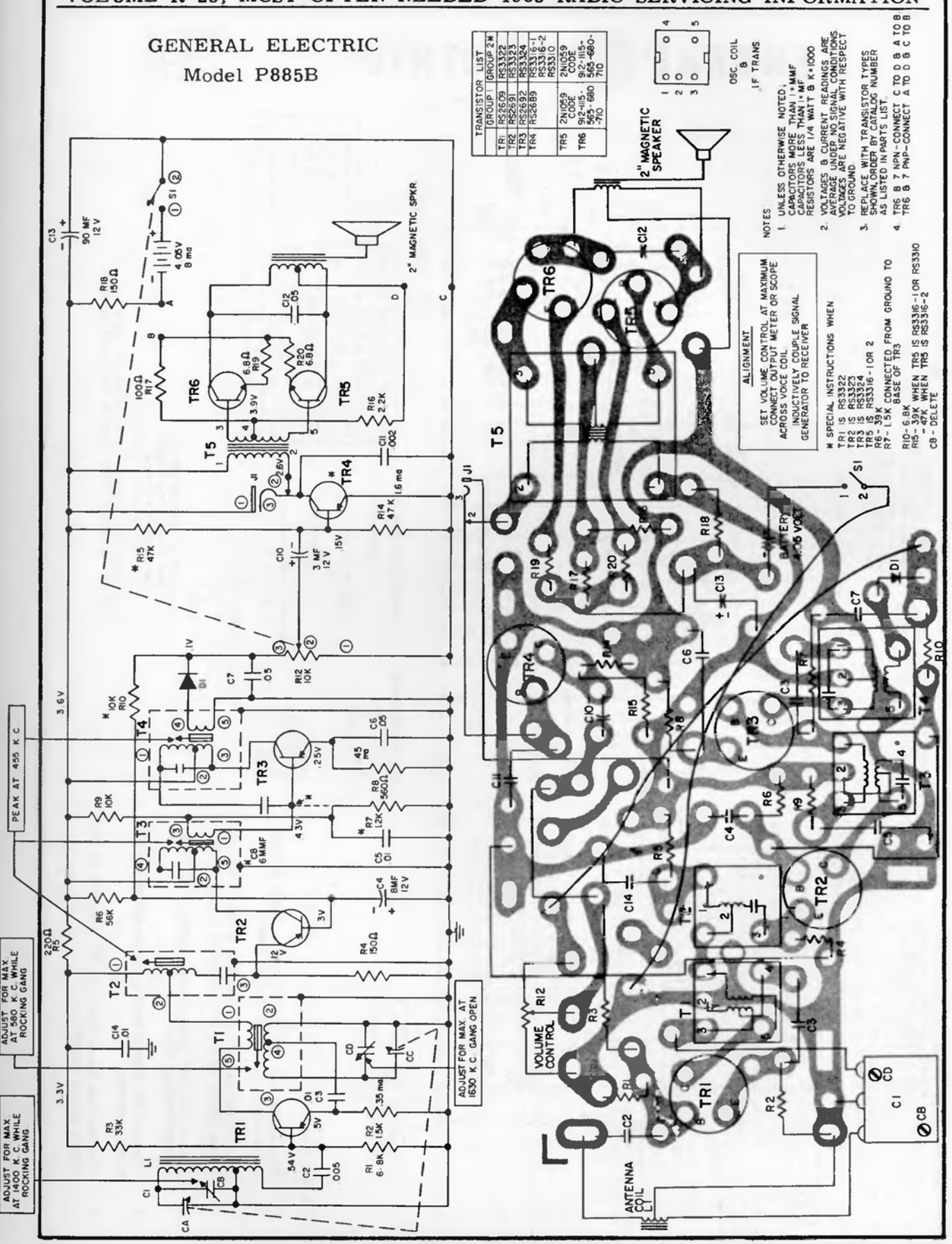

GENERAL ELECTRIC

MODELS
P910A
P911A

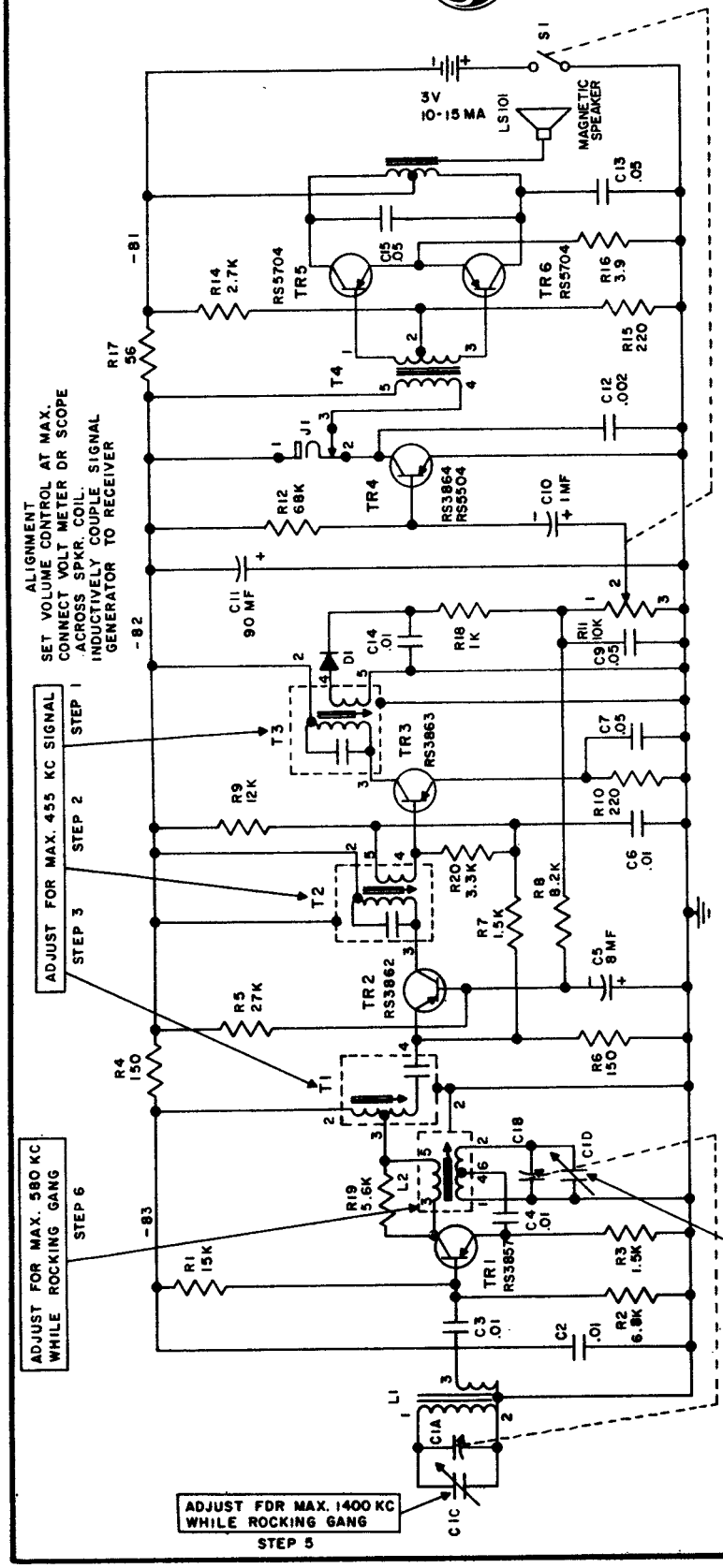

TABLE OF TRANSISTOR VOLTAGES			
	EMITTER	BASE	COLLECTOR	FUNCTION
TR1	0	.65	2.5	OSC MIXER
TR2	.19 TO .29	.34 TO .4	2.6	1st I.F. AMP
TR3	.18 TO .3	.35 TO .43	2.6	2nd I.F. AMP
TR4	.0	.2	2.6	AUDIO DRIVER
TR5	.04	.2	3	PUSH PULL
TR6	.04	.2	3	AUDIO OUTPUT

NOTES:

1. UNLESS OTHERWISE NOTED
   CAP. MORE THAN 1 = MMF
   CAP. LESS THAN 1 = MF
   RES. ARE 1/2 WATT K = 1000
2. VOLTAGES ARE NEGATIVE WITH RESPECT TO GRD UNDER NO SIGNAL CONDITIONS & VOL. CONTROL MIN.

CHASSIS REMOVAL

1. Remove the dial knob screw with a small Phillips screw driver and lift off the dial knob.
2. Remove cabinet back by inserting a coin in the slot on the bottom of the set, giving it a slight twist.
3. Remove two 1/8" Phillips-head screws located underneath the batteries.
4. Remove 1/8" Phillips-head screw located next to the tuning capacitor.
5. Slide out the circuit board in the direction of the cabinet bottom and lift out.

GENERAL ELECTRIC

MODEL C937A

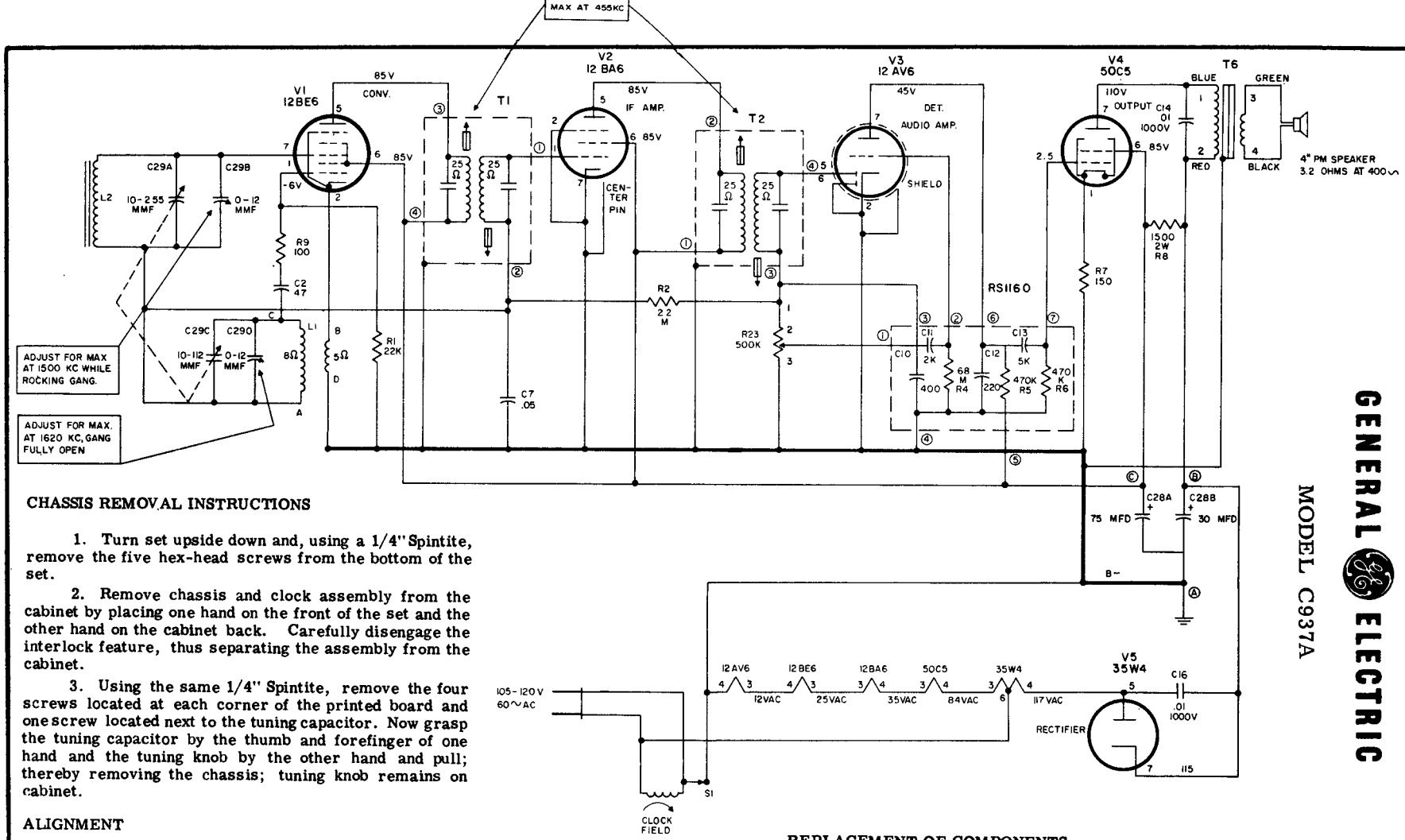

CHASSIS REMOVAL INSTRUCTIONS

1. Turn set upside down and, using a 1/4" Spintite, remove the five hex-head screws from the bottom of the set.

2. Remove chassis and clock assembly from the cabinet by placing one hand on the front of the set and the other hand on the cabinet back. Carefully disengage the interlock feature, thus separating the assembly from the cabinet.

3. Using the same 1/4" Spintite, remove the four screws located at each corner of the printed board and one screw located next to the tuning capacitor. Now grasp the tuning capacitor by the thumb and forefinger of one hand and the tuning knob by the other hand and pull; thereby removing the chassis; tuning knob remains on cabinet.

ALIGNMENT

When aligning, always connect the output lead of the signal generator to the grid of an IF tube through a .05 MF capacitor. This will prevent the output impedance of the generator from having a loading effect on the circuit. The signal input should be low and the volume control set at maximum so the AVC will not affect the output.

REPAIRING OF PRINTED BOARDS

In event that the copper foil has been damaged, the break can be repaired by flowing solder across the gap. If the gap is too large, it can be bridged by soldering a piece of hook-up wire across it. If the copper foil becomes raised from the board, clip off the raised portion and replace it with a section of wire.

UNLESS OTHERWISE DENOTED
CAPACITORS MORE THAN 1= MMF
CAPACITORS LESS THAN 1= MF
RESISTOR- K= 1,000
- M= 1,000,000
DC VOLTAGES AT 117 V LINE TO B- W/20,000 Ω/ VOLT METER

BOTTOM VIEW

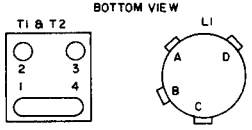

REPLACEMENT OF COMPONENTS

After removing a defective part, the mounting holes should be cleaned of all solder. The replacement part can be inserted more easily and a better soldering connection can be accomplished. It is important to use extreme care while soldering on this chassis. Only apply the soldering iron long enough to melt the solder and pull out the part being replaced. Too much heat on the chassis will cause the copper plating to become unbonded. Since too much heat may damage a component or unbond the copper pattern, a soldering iron of approximately 35 watts maximum is recommended.

GENERAL ELECTRIC

TU220 WITH FM STEREO
MODELS TU220A,B,C,E,G & H

(Schematic diagram on the next page adjacent at right)

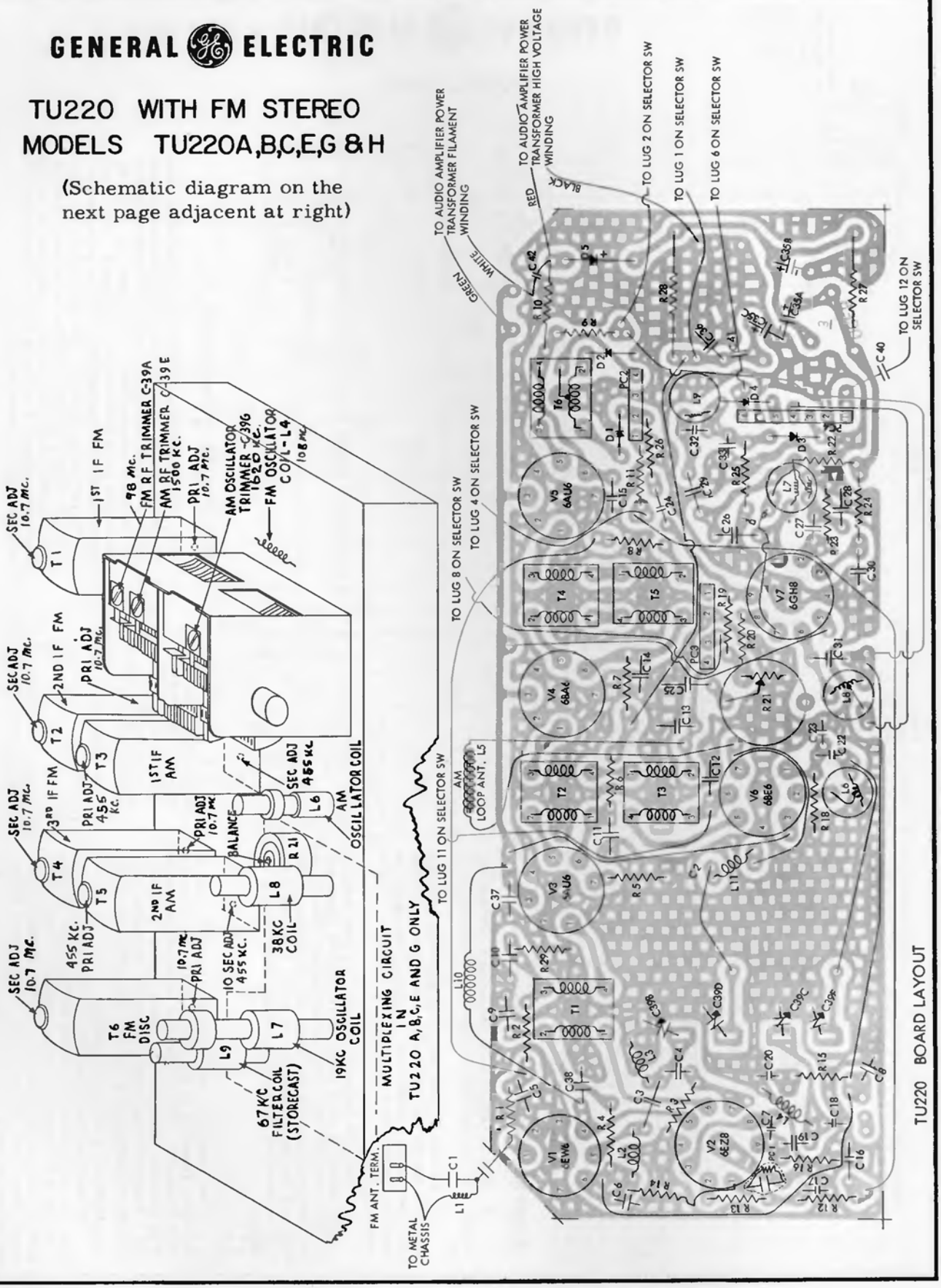

GENERAL ELECTRIC Models TU220A, B, C, E, G, H

Schematic diagram, other material on preceding page.

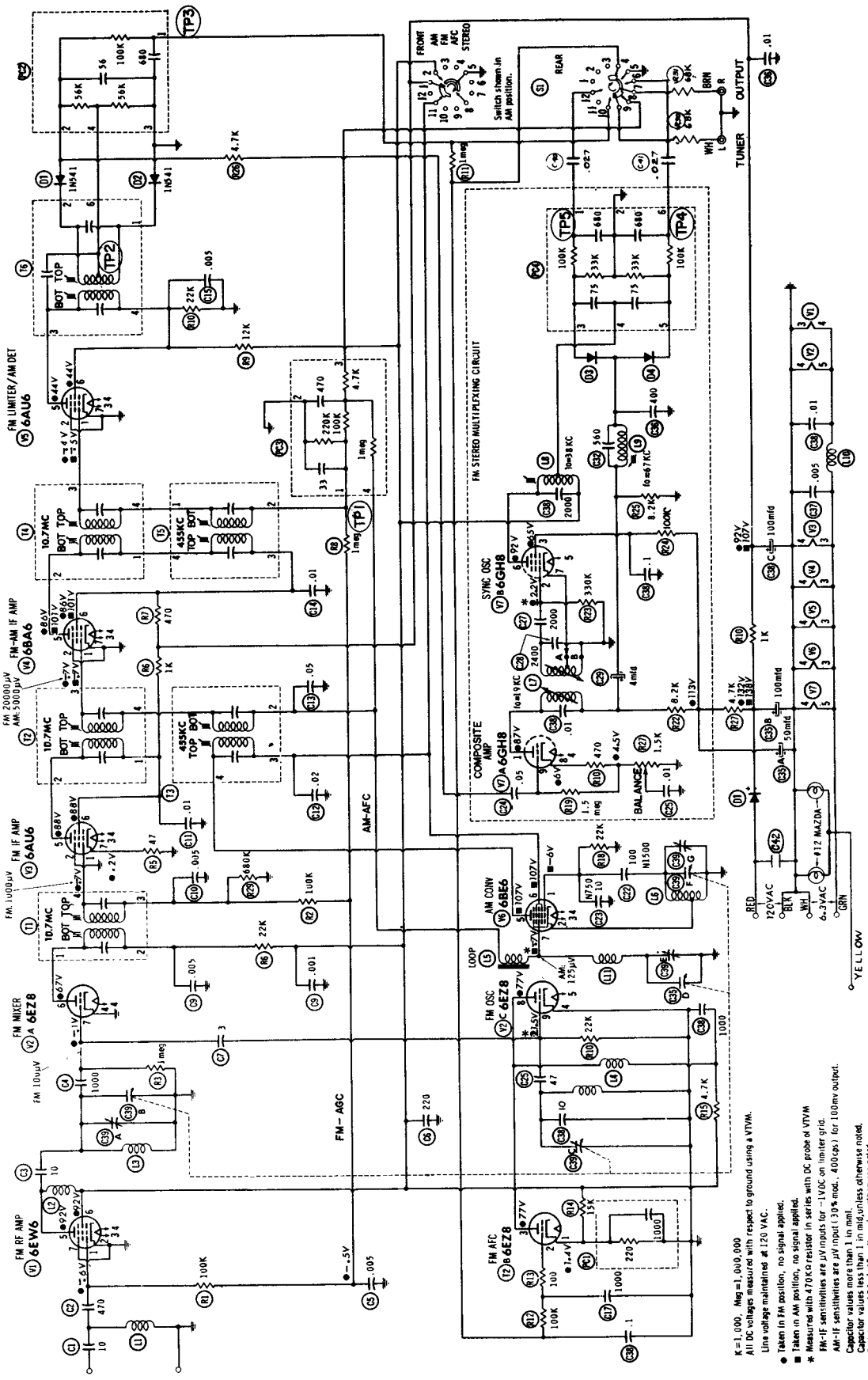

GENERAL ELECTRIC RC3200, RC3210, RC3230 SCHEMATIC DIAGRAM

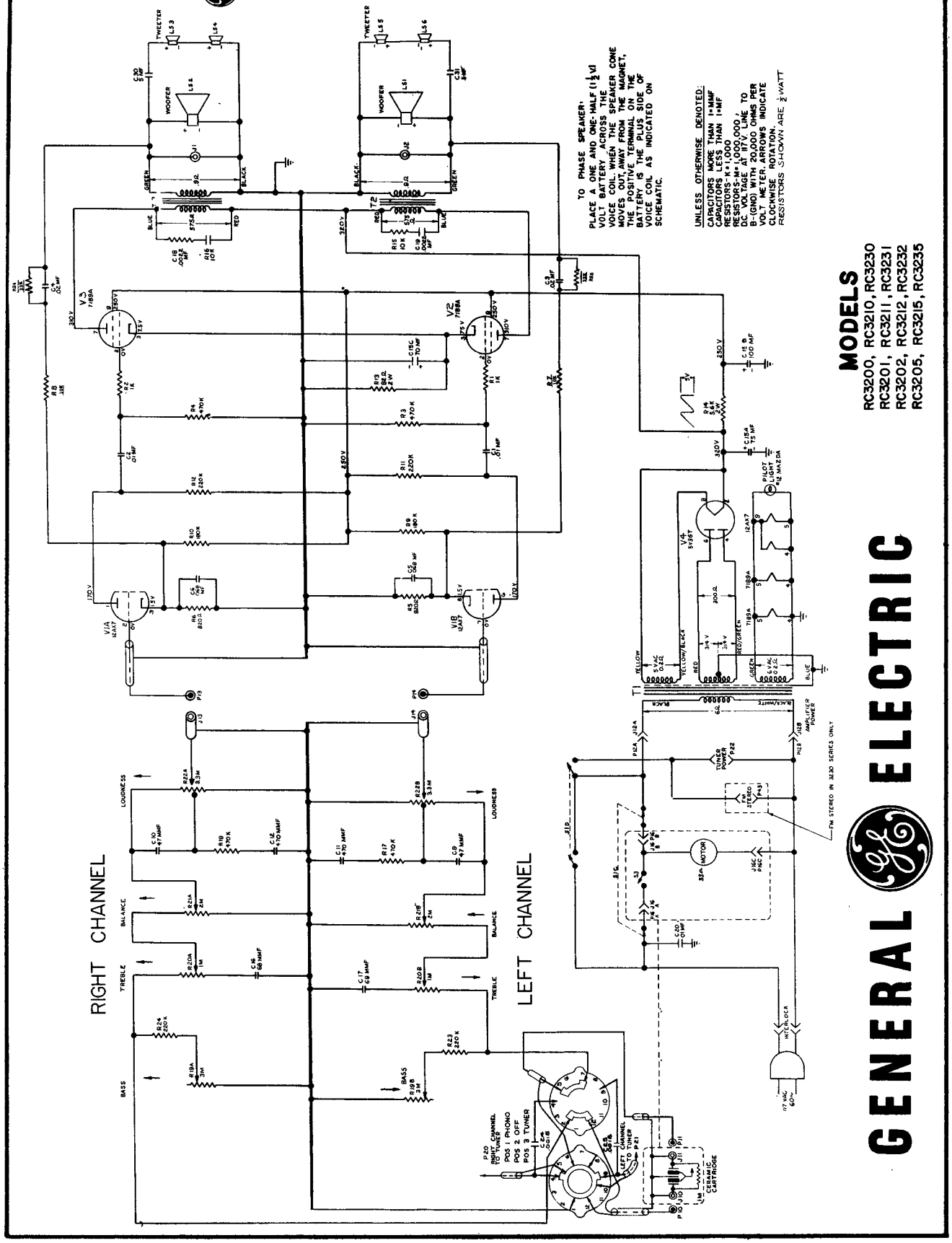

GENERAL ELECTRIC

RC1190/RC1195

INCLUDES MODELS RC1190A,D,F,G/ RC1195A,D,F,G,H
RC1191 A,D,F,G/ RC1196A,D,F,G,H
RC1192 A,D,F,G/ RC1197A,D,F,G,H
RC1193A,D,F,G/RC1198A,D,F,G,H

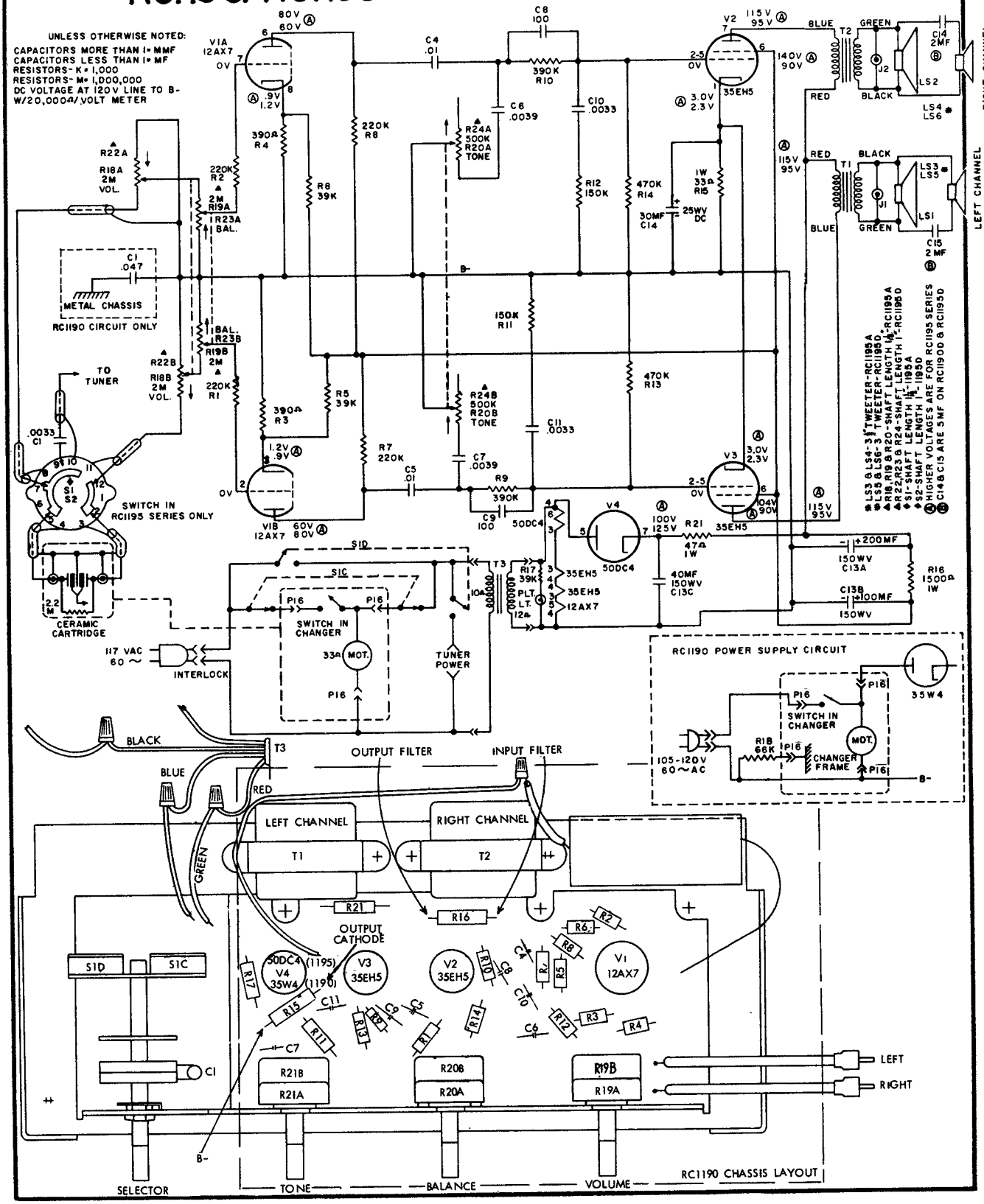

RC1195 CHASSIS LAYOUT

GENERAL ELECTRIC

TU20 TUNER

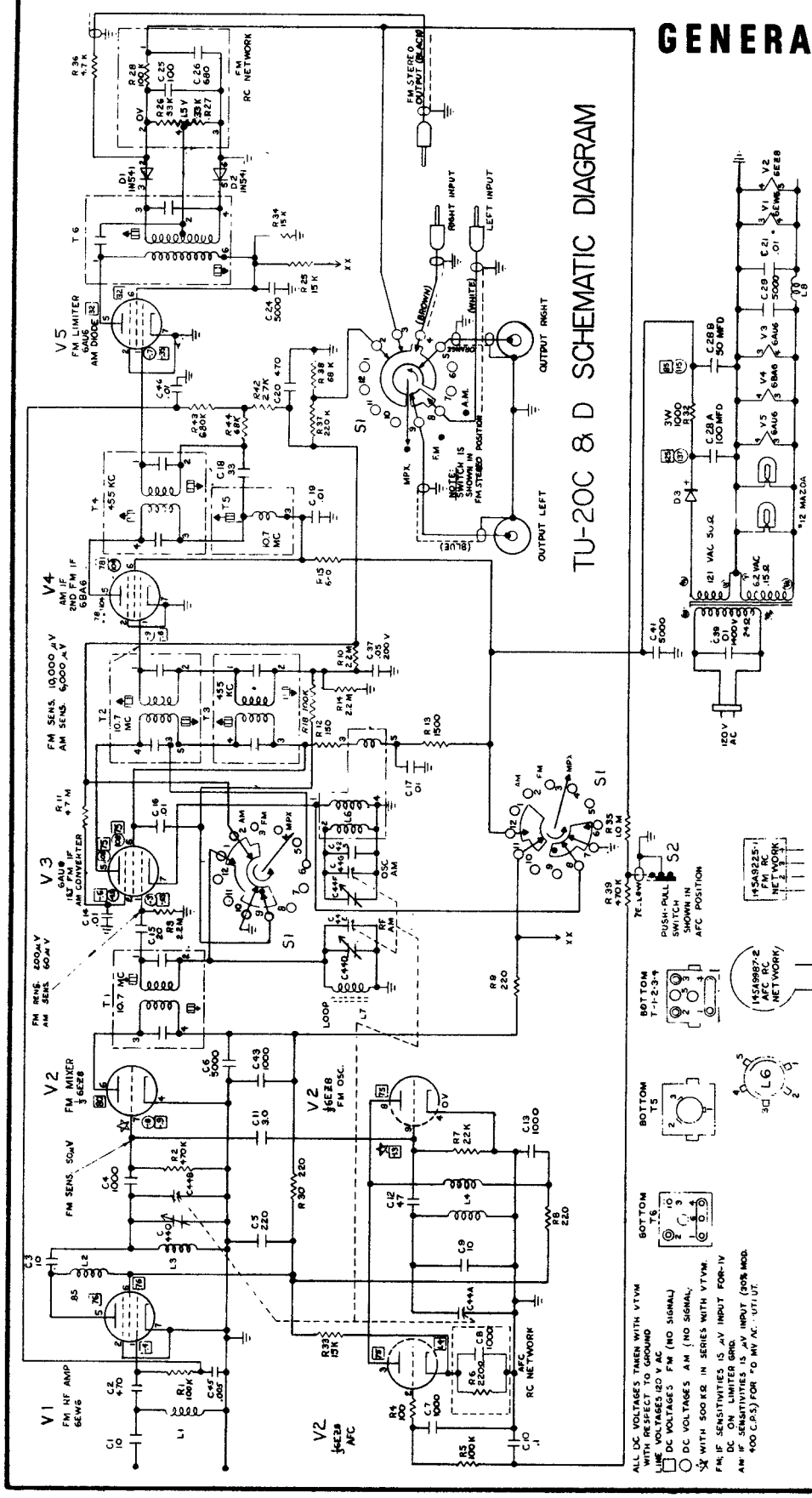

The basic Tuner TU-20 design consists of five tubes. All versions have two controls: (1) a TUNING control for selection of AM or FM stations (2) a SELECTOR control with AM,FM and FM (AFC) positions. Tuner versions (TU-20C, D) have four positions on the selector control (AM, FM, FM STEREO and FM (AFC). The FM (AFC) on the four position SELECTOR control is actuated by a push-pull switch mounted on the SELECTOR control.

To eliminate signal overloading, an AGC circuit is being incorporated in the TU-20 tuners and is identified by the code A-31 stamped on the tuner chassis.

To incorporate AGC in the tuners in the field, requires the removal of R16 and the addition of five (5) components to the circuit. These components are designated on the schematics as R42, R43, R44, C45 and C46.

Also incorporated in the TU-20 tuners is the resistor R18, a 100K ohms. This is to widen the IF band width required for FM Stereo reception. Solder this resistor to bottom side of the chassis board because of the space limitations on the top.

GENERAL ELECTRIC RP1560, RP1561, RP1570, RP2050A, RP2051A

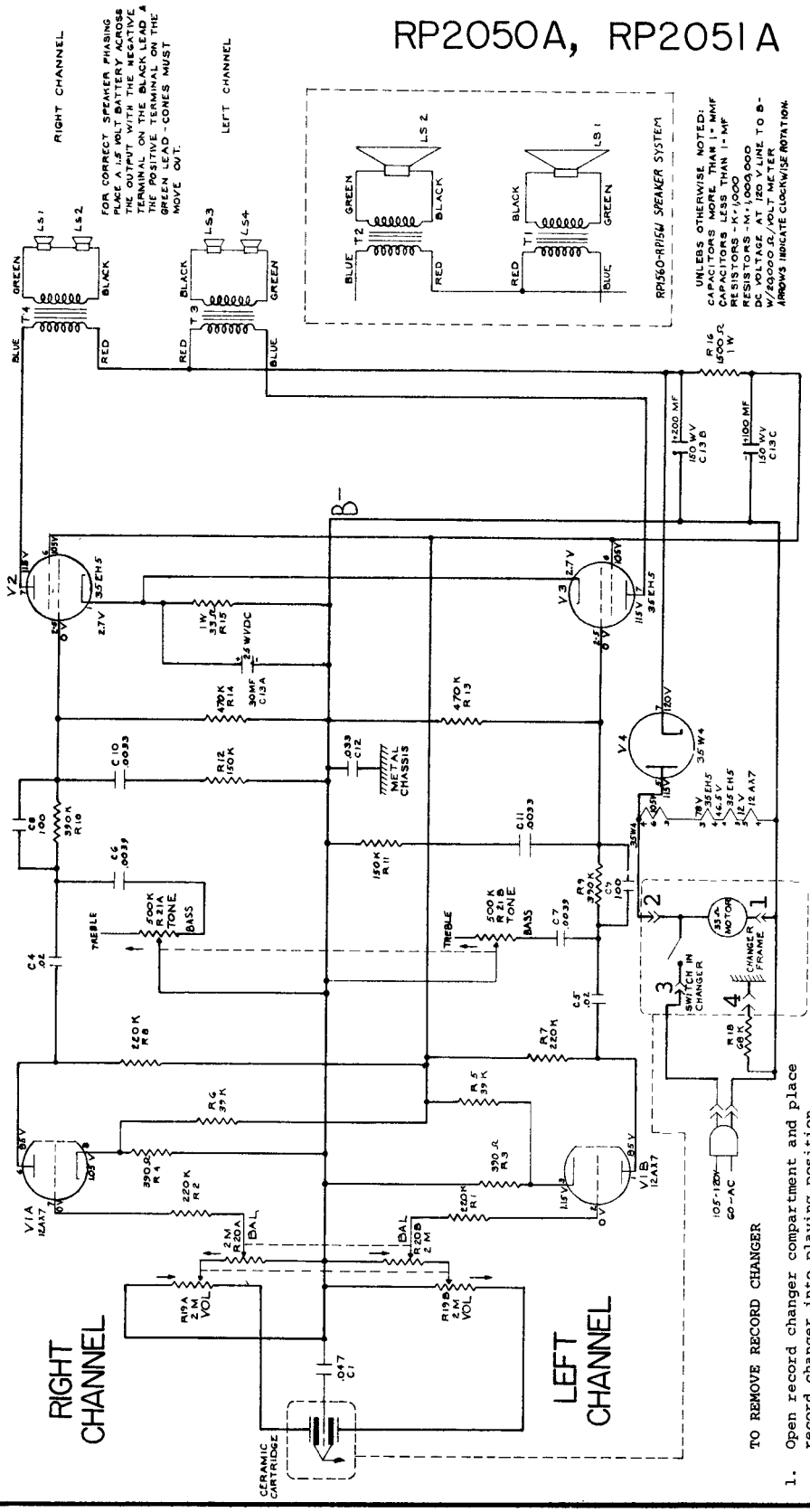

CARTRIDGE:	Sonotone 16T-S With Stylus - RP1560, RP1561, Cat. No. RS3476
	Sonotone 16T-SD With Stylus - RP1570 - Early Production Cat. No. RS3478
	G. E. C-100 Without Stylus - RP1560, RP1570 Series - Late Production Cat. No. RS3824
STYLUS:	Sonotone 16T-S, RP1560, RP1561 Cat. No. RS3477 - Early Production
	Sonotone 16T-SD, RP1570 - Early Production Cat. No. RS3479
	G. E. C-100 Stylus - Sapphire/Diamond RP1570-Late Production Cat. No. RS3825
	G. E. C-100 Stylus - Sapphire/Sapphire RP1560, RP1561 - Late Production Cat. No. RS4154

TO REMOVE RECORD CHANGER

1. Open record changer compartment and place record changer into playing position.
2. Remove two (2) screws from the back cover and remove back cover.
3. Place the shipping screw clips to a vertical position.
4. Lift the record changer and tilt upwards until the plastic power plug and signal plugs are accessable. Remove plugs from record changer.
5. Remove record changer from compartment.

TO REMOVE AMPLIFIER

1. Follow Steps 1 through 4 as described under "TO REMOVE RECORD CHANGER".
2. Remove knobs from control panel.
3. Free all wires from the metal lead dressers tabs.
4. Slide the AC power receptacle from the bracket.
5. Remove tape and wire nuts connecting the speaker leads. Be sure to label speaker leads to assure proper phasing when reassembling.
6. Remove screw holding electrolytic.
7. Remove three (3) nuts holding amplifier to cabinet and remove amplifier.

TO REMOVE SPEAKER

1. Unclasp speaker wing clamp and swing out speaker enclosure.
2. Lift wing enclosure off hinges and place grille front on a soft cloth.
3. Remove six (6) screws from speaker enclosure back and remove back.
4. Unsolder and label speaker leads to assure proper phasing when reassembling.
5. Remove nuts holding speaker to grille and remove speaker.

GENERAL ELECTRIC

MODELS RC1611A, RC1616A, RC1616B

(Circuit diagram on the next page, adjacent at right)

TUNER - The RC1616A series used the TU-20G tuner and the RC1616B series used the TU-20C tuner. The difference between the tuner models is the type of selector switch used. The TU-20G utilized a three position selector switch (AM, FM, FM-AFC) and the TU-20C tuner used a four position selector switch (AM, FM, FM Stereo, and FM-AFC). The FM-AFC position on the TU-20C tuner is actuated by a push-pull switch mounted on the selector control shaft. This places the FM stereo switching on the TU-20C tuner selector and changes the RC1616B function control switching to PHONO-OFF-TUNER-TAPE. This required a small wiring change to the function switching circuit as shown in the RC1616B schematic.

A modification to the scratch filter circuit has been incorporated in the RC1616B series beginning with serial number K294001. It results in the elimination of four cables to the scratch filter switch and better component assembly in the power amplifier.

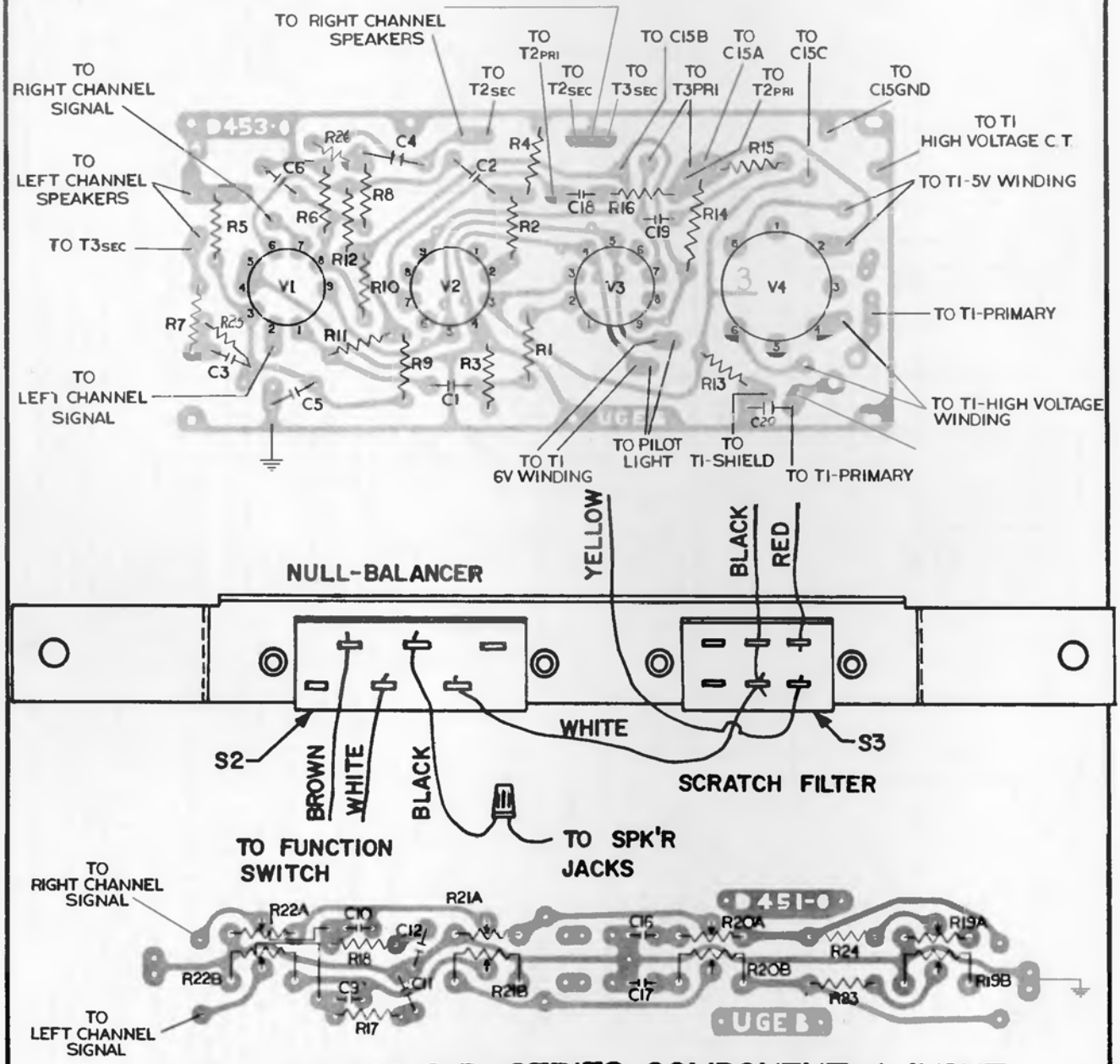

RC1611 & RC1616A & B SERIES COMPONENT LAYOUT

GENERAL ELECTRIC Models RC1611A, RC1616A, B (Continued)

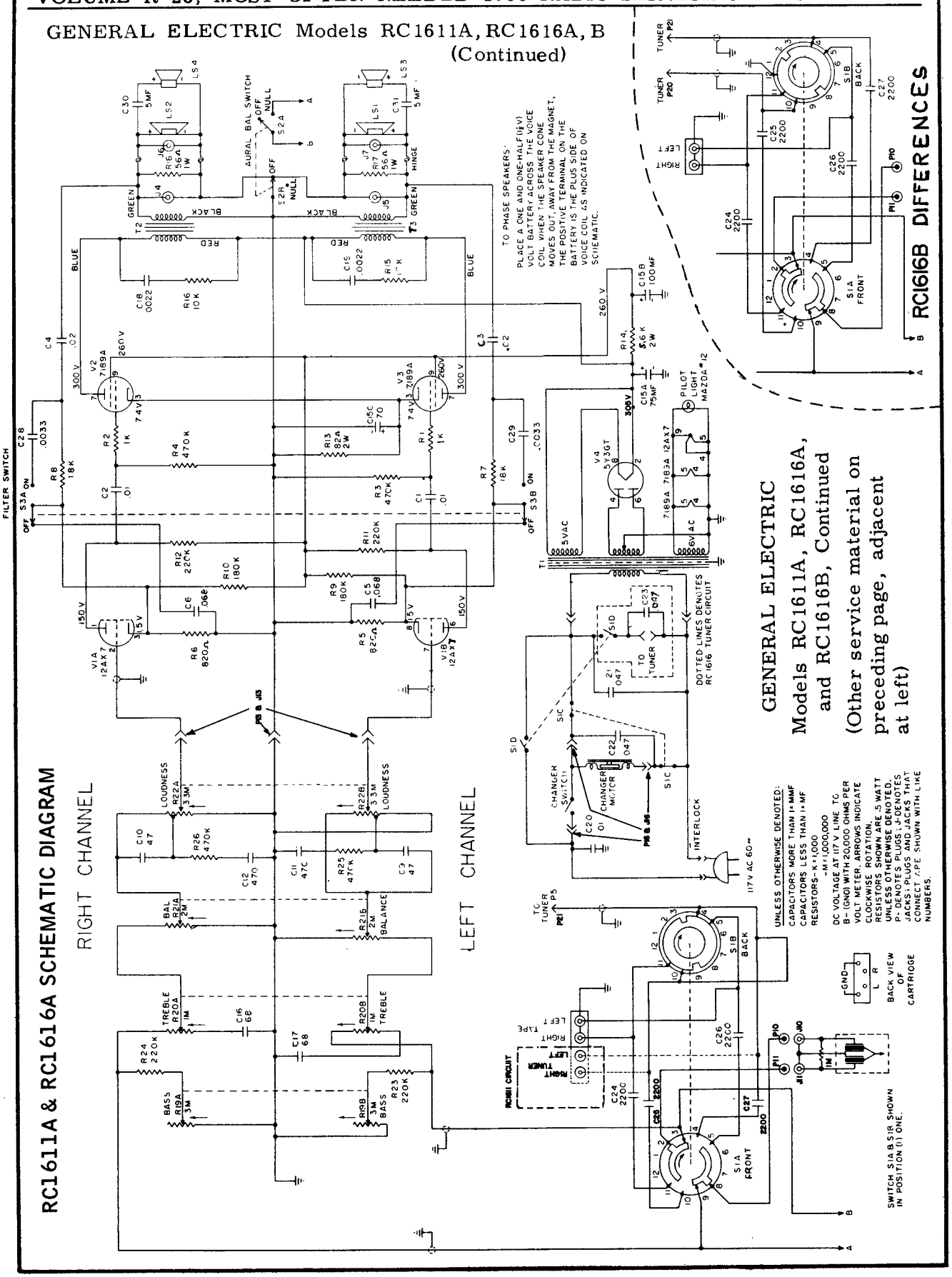

GENERAL ELECTRIC

RC1680A
RC1690A, AR, B, & BR
RC1691A, AR, B, & BR
RC1692A, AR, B, & BR
RC1694A, AR, B, & BR

(Continued on the next page at right)

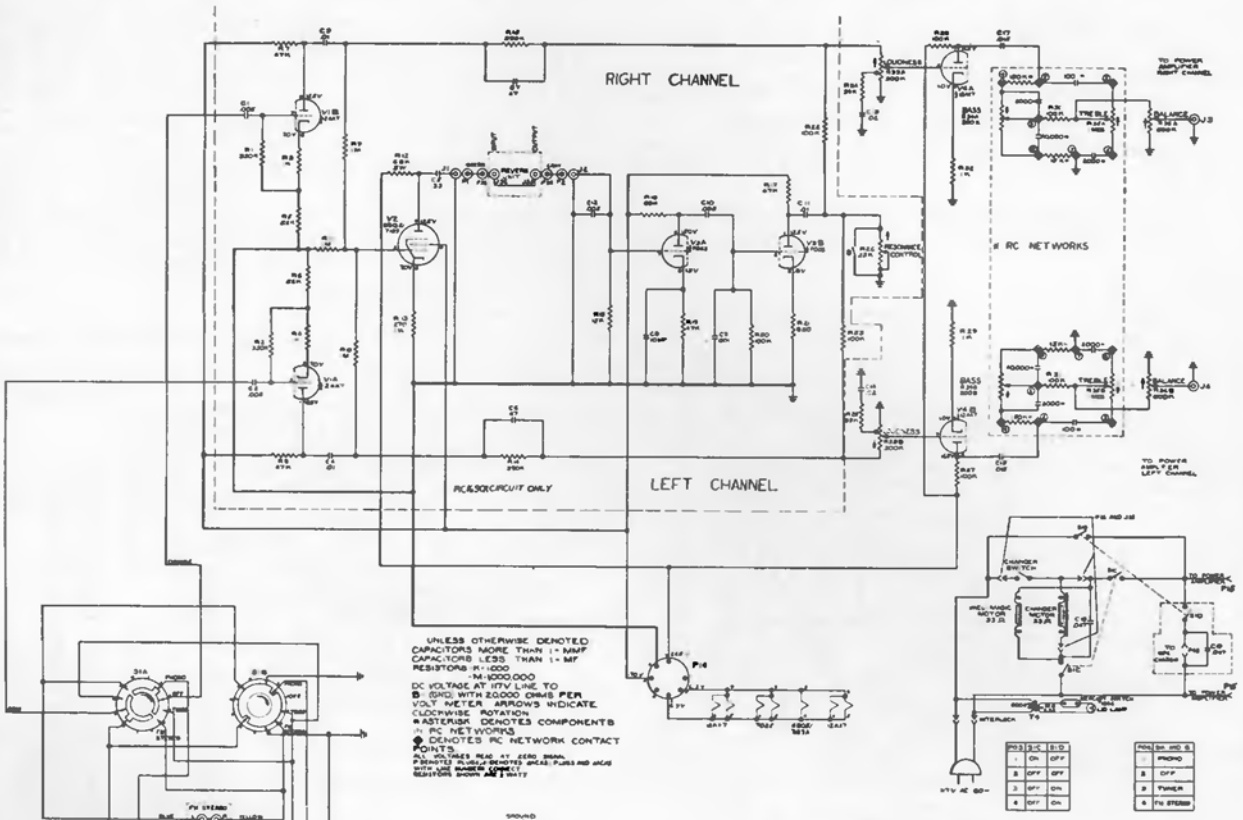

SCHEMATIC DIAGRAM—CONTROL PANEL RC1690R

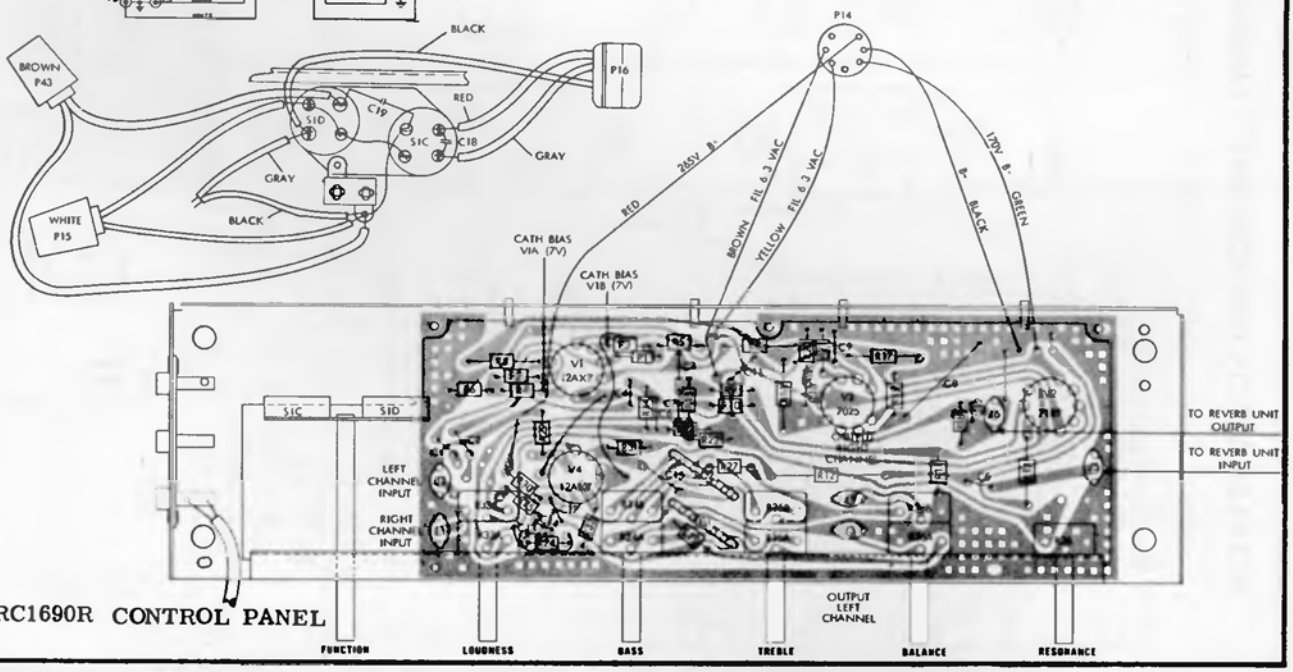

RC1690R CONTROL PANEL

GENERAL ELECTRIC Series RC1680, RC1690, RC1691, RC1692, RC1694

(Continued from preceding page adjacent at left)

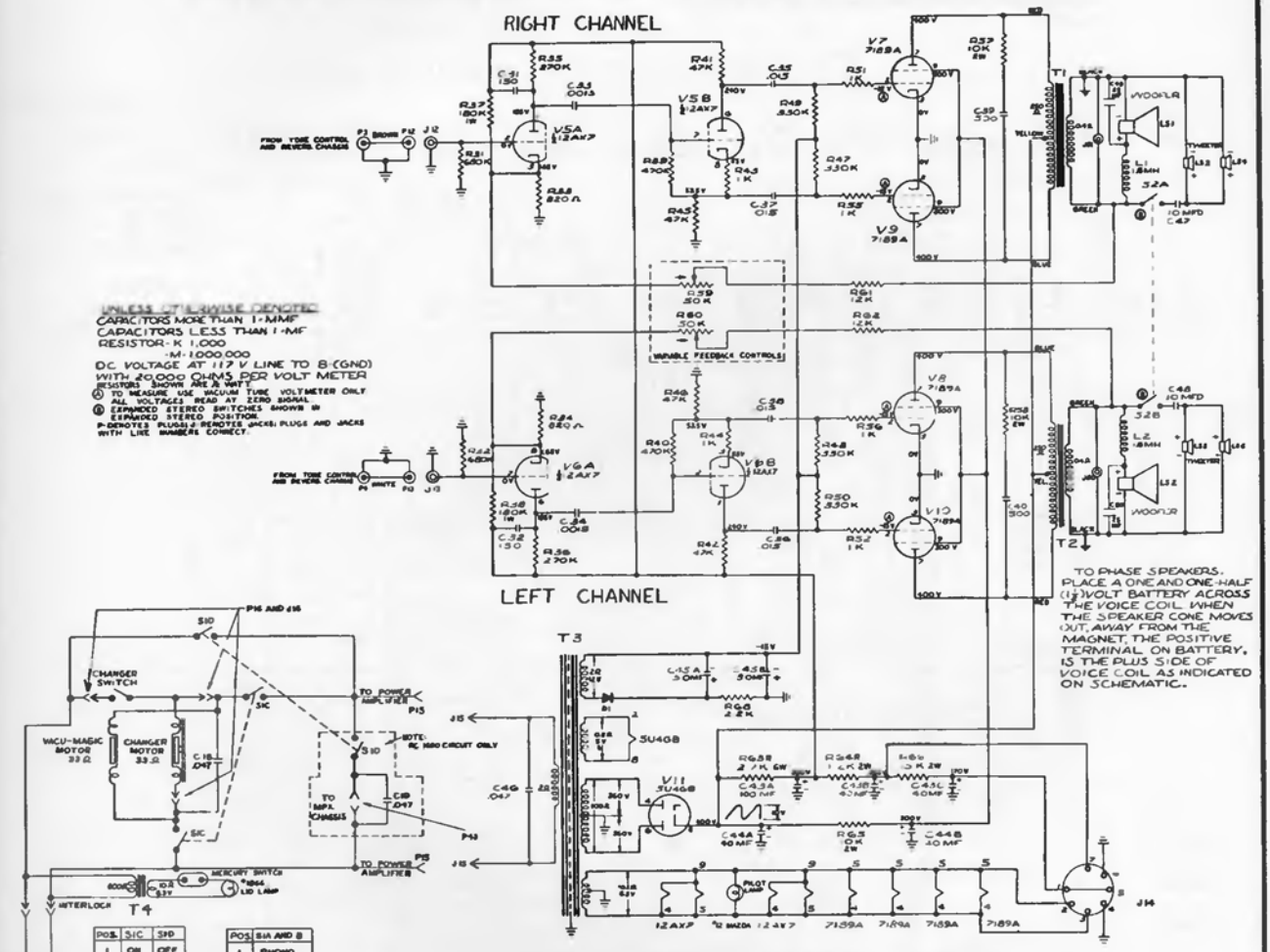

POS.	S1C	S1D
1	ON	OFF
2	OFF	OFF
3	OFF	ON
4	OFF	ON

POS.	S1A AND B
1	PHONO
2	OFF
3	TUNER
4	TAPE

DIAGRAM—POWER AMPLIFIER RC1680-90

AMPLIFIER CHASSIS LAYOUT—RC1680/90

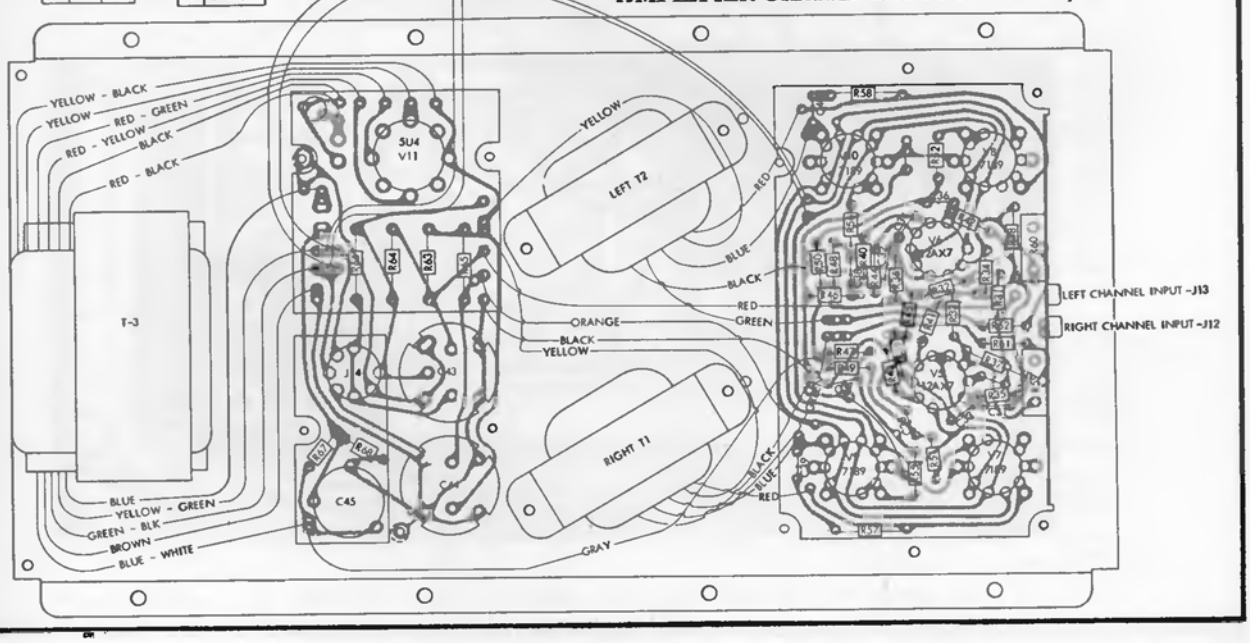

Hitachi, Ltd. MODEL T-728

(Continued on page 63, adjacent at right)

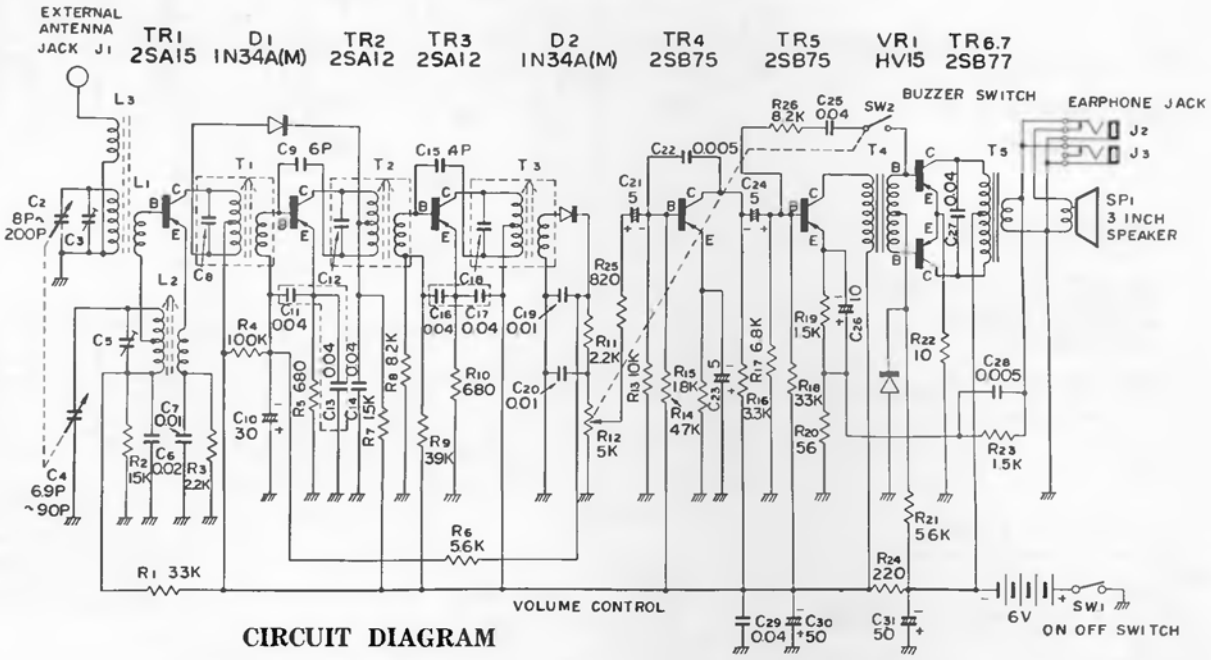

CIRCUIT DIAGRAM

Voltages of each transistor electrode (V)

	TR_1	TR_2	TR_3	TR_4	TR_5	TR_6	TR_7
Base	1.2	0.7	0.6	0.7	0.7	0.1	0.1
Emitter	1.4	0.7	0.6	0.6	0.7	0.15	0.15
Collector	4.7	4.7	4.7	3.3	4	4.7	4.7

I. F. 455 KC.

Resistance of transformer (Ω)

	T_1	T_2	T_3	T_4	T_5
Primary	4.8	4.8	4.4	1.2K	30
Second	0.8	0.4	0.3	700	1

CHASSIS ASSEMBLY VIEW FROM COMPONENT SIDE

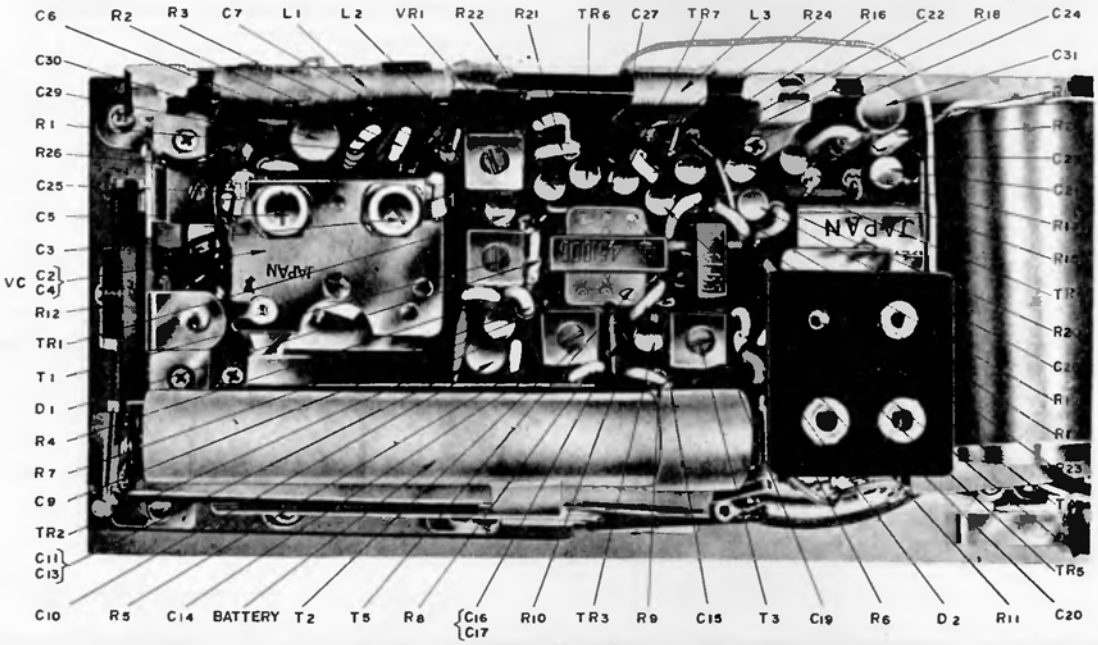

Hitachi, Ltd. MODEL T-728

(Continued from page 62, at left)

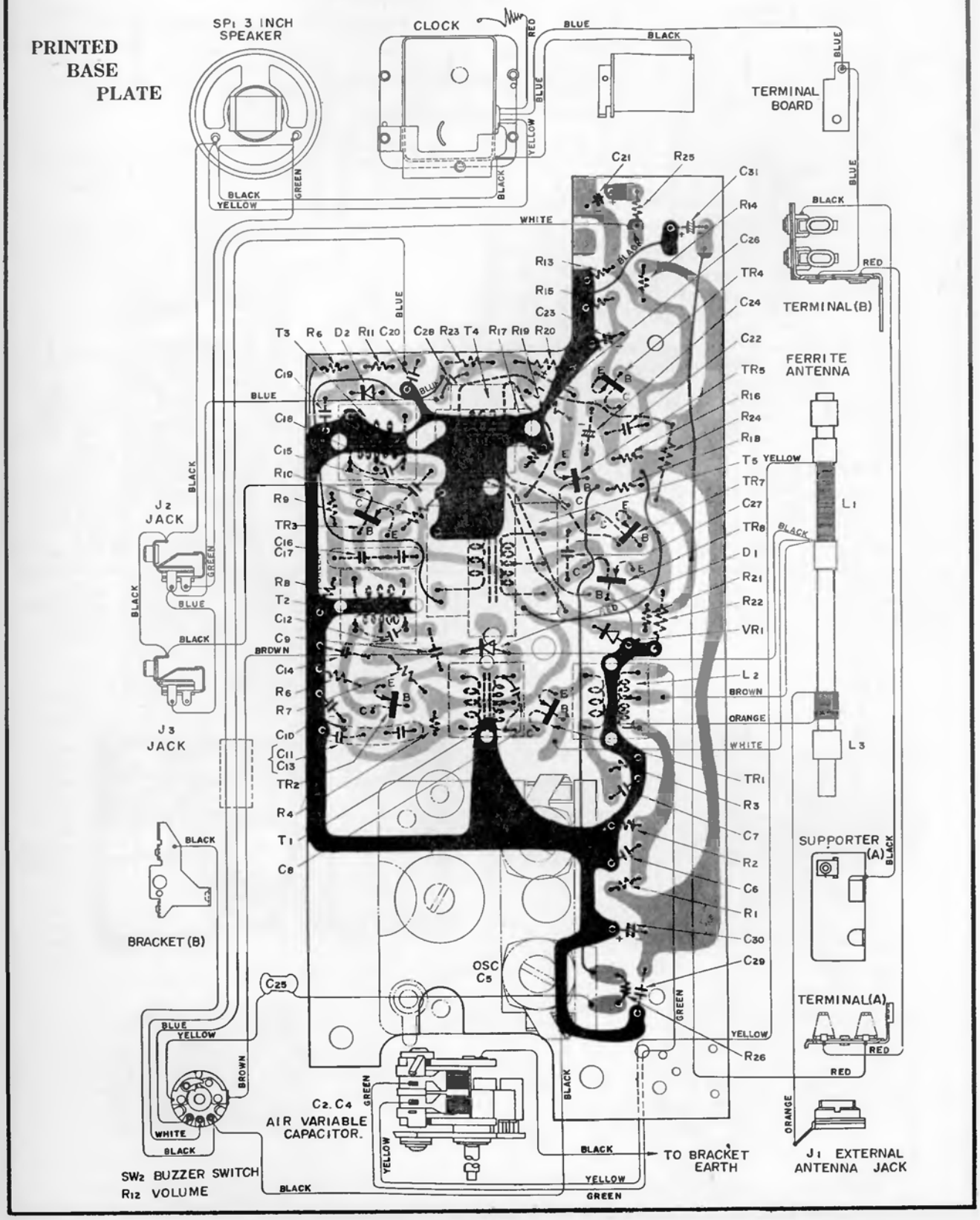

Hitachi, Ltd.

MODEL WH-829

(Continued on page 65, adjacent at right)

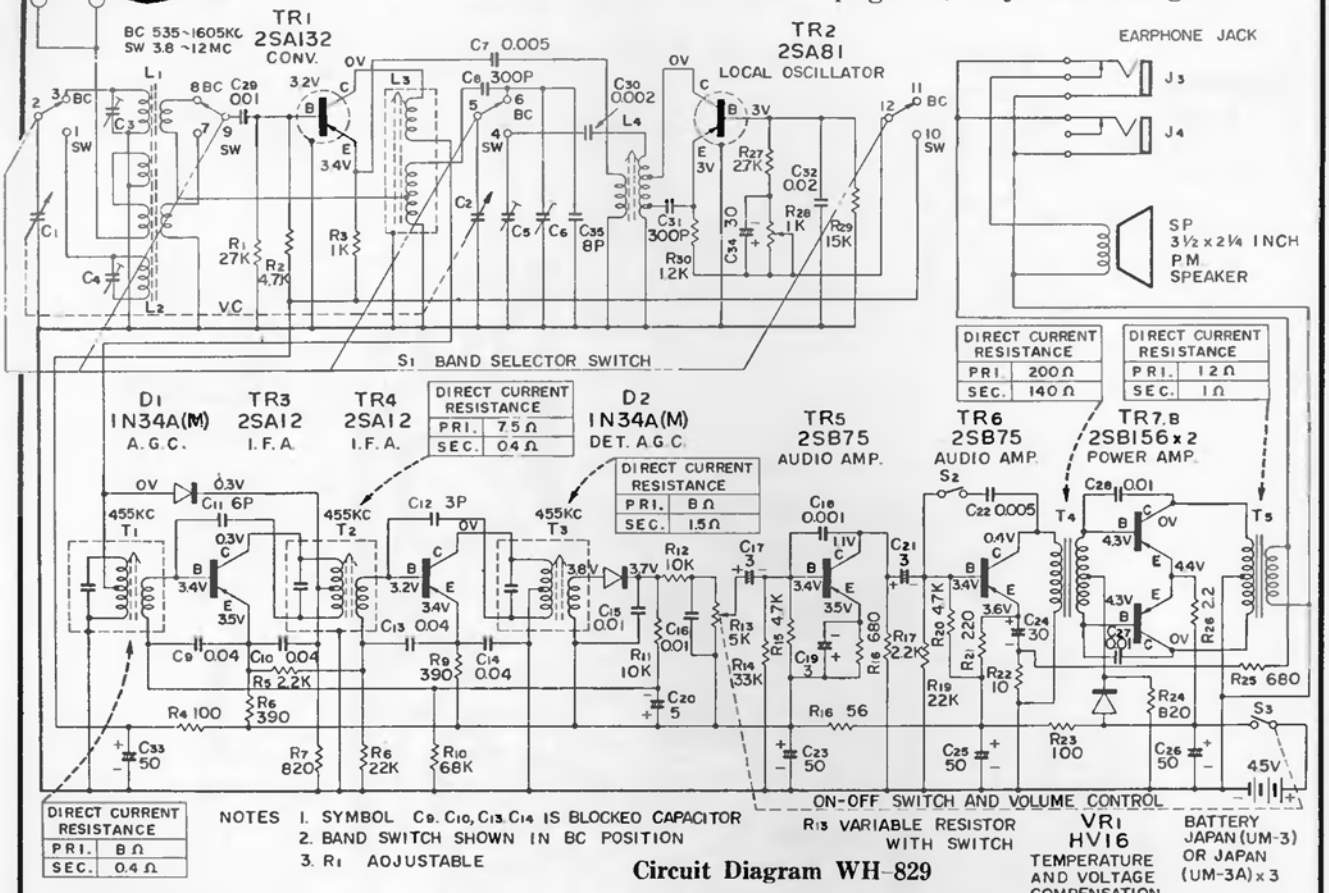

DIRECT CURRENT RESISTANCE	
PRI.	7.5 Ω
SEC.	0.4 Ω

DIRECT CURRENT RESISTANCE	
PRI.	8 Ω
SEC.	1.5 Ω

DIRECT CURRENT RESISTANCE	
PRI.	200 Ω
SEC.	140 Ω

DIRECT CURRENT RESISTANCE	
PRI.	12 Ω
SEC.	1 Ω

DIRECT CURRENT RESISTANCE	
PRI.	8 Ω
SEC.	0.4 Ω

NOTES
1. SYMBOL C9, C10, C13, C14 IS BLOCKED CAPACITOR
2. BAND SWITCH SHOWN IN BC POSITION
3. R1 ADJUSTABLE

Circuit Diagram WH-829

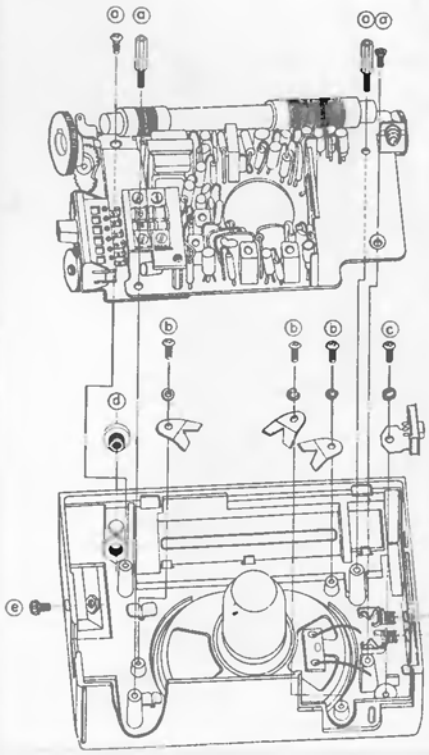

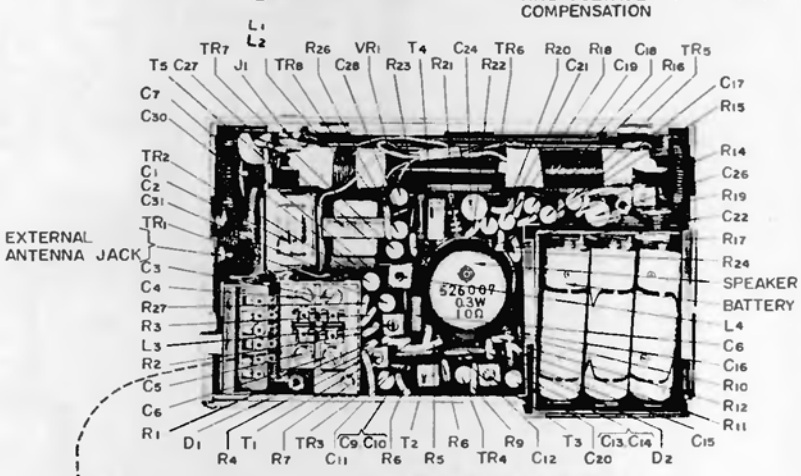

BACK VIEW OF TRIMMER TERMINAL BOARD

C35 IS ATTACHED TO BACK OF TERMINAL BOARD

Hitachi, Ltd.

MODEL WH-829

(Continued from page 64, at left)

Circuit Board Diagram WH-829

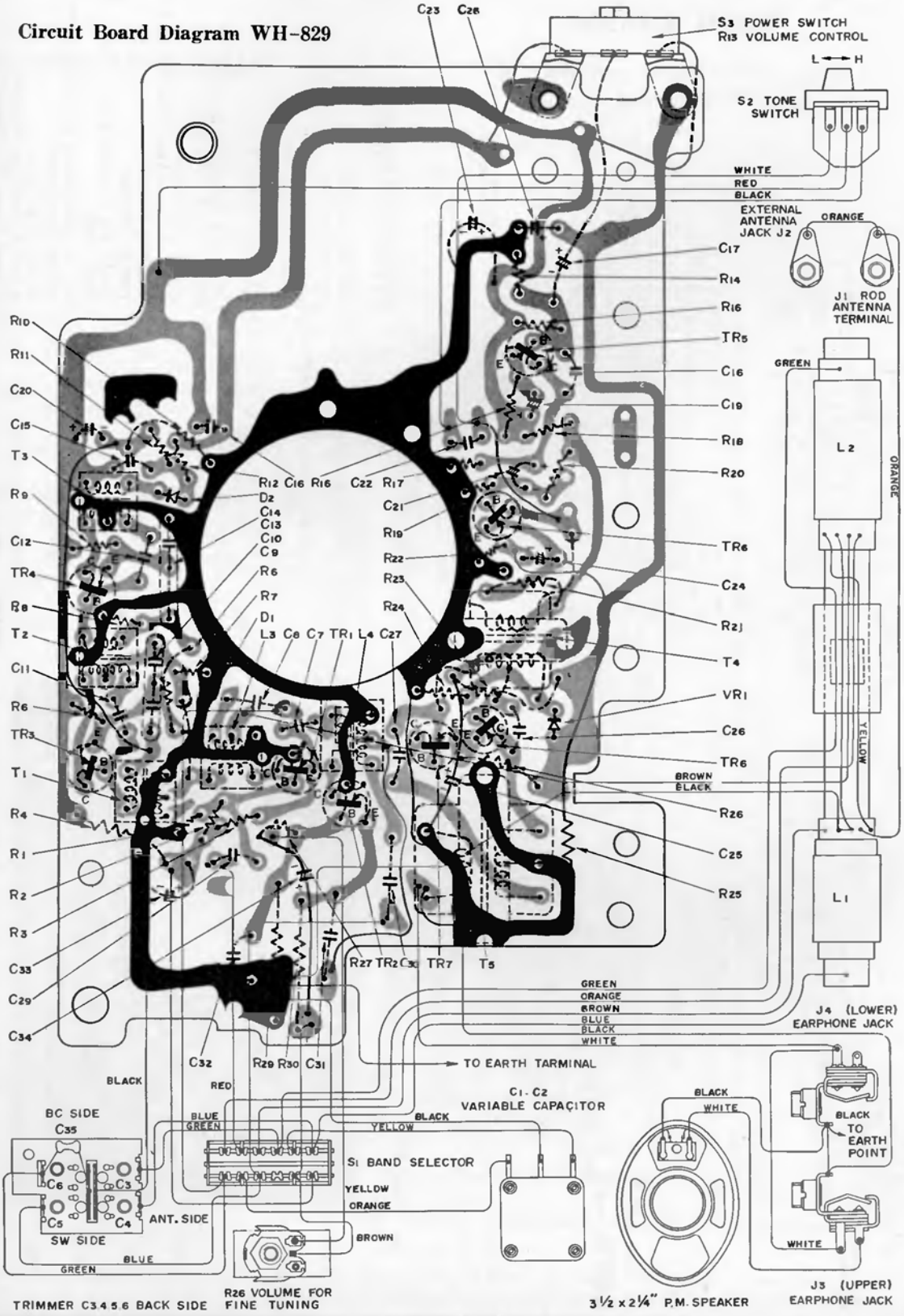

Hitachi, Ltd.

MODEL XH-1500

(Additional service information on page 67, adjacent at right)

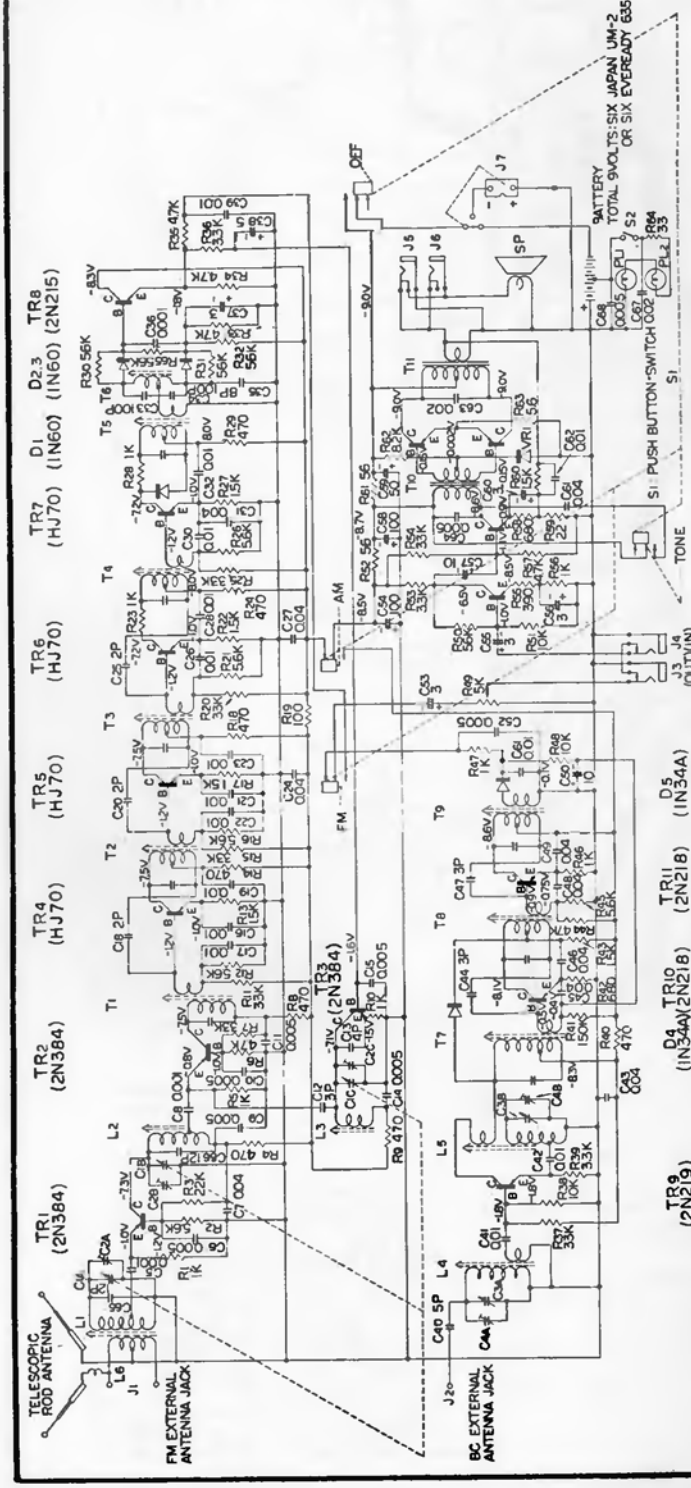

SPECIFICATION

TUNING RANGE	AM 535~1,605 kc FM 86.5~108 Mc
TRANSISTOR COMPONENTS	2N384 FM R-F Amp. 2N384 FM Local Osc. 2N384 FM Mix. HJ 70×4 FM I-F Amp. 2N215 FM AFC Amp. 2N219 AM Frequency Conv. 2N218×2 AM I-F Amp. 2N215×2 A-F Amp. 2N217×2 Power Amp. Class B Push Pull Coupling
GERMANIUM DIODE	1N60 FM Limiter 1N60×2 FM Det. 1N34A AM Det. and AVC 1N34A AVC
VARISTOR	HV 15 Temperature and Voltage Compensator
OUTPUT	180mW (Undistorted) 250mW (Maximum)
POWER SOURCE	9 Volt (6 Flashlight Batteries)
SPEAKER	3 inch×7 inch PM. Speaker
EARPHONE JACK	2 (Type EL-213 Hitachi Magnetic Earphone can be Plugged in)
DIMENSIONS	Width 8⅞ inch×Height 5⅝ inch×Depth 2½ inch

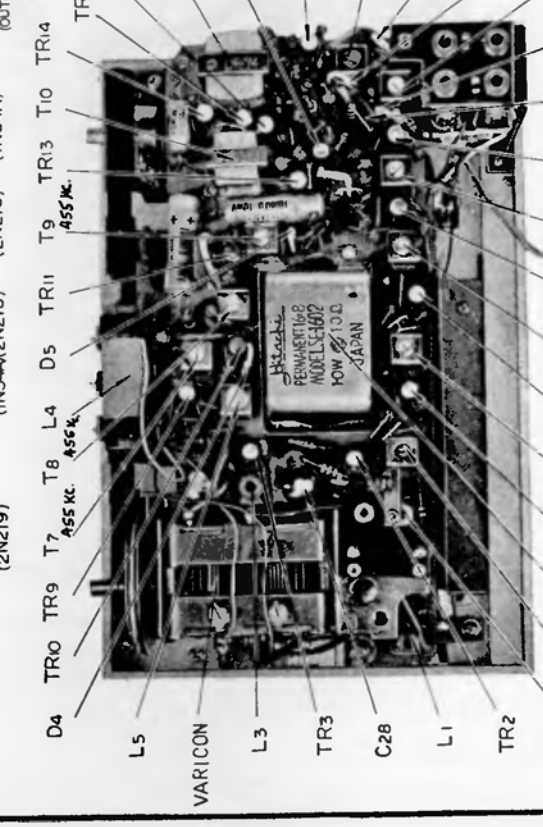

CHASSIS ASSEMBLY VIEW FROM COMPONENT SIDE

Hitachi, Ltd.

MODEL XH-1500

(Continued from page 66, at left)

CIRCUIT BOARD DIAGRAM

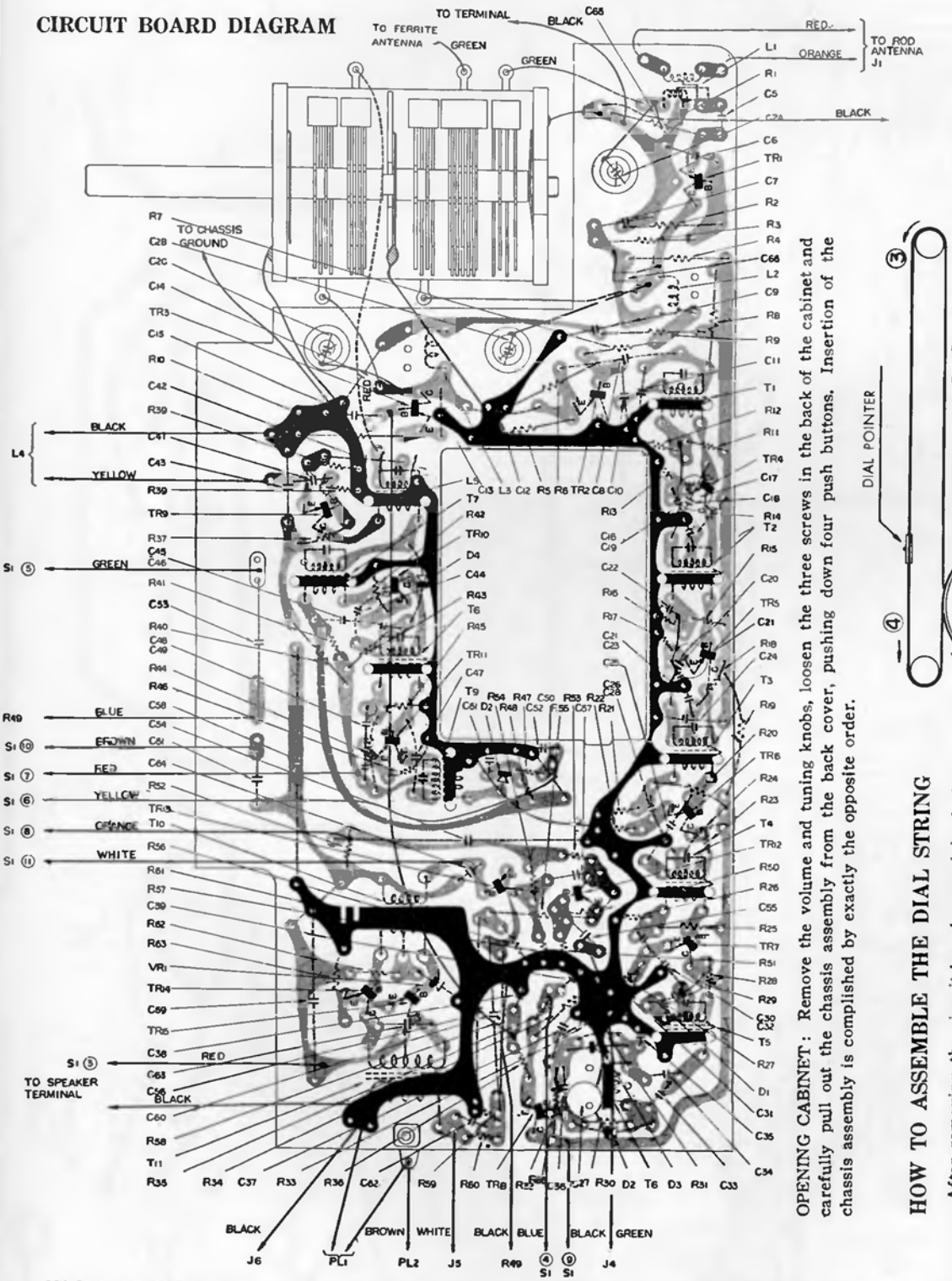

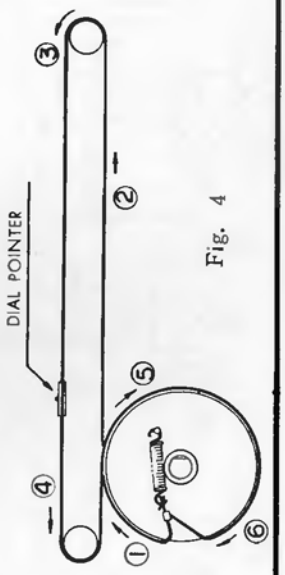

Fig. 4

OPENING CABINET: Remove the volume and tuning knobs, loosen the three screws in the back of the cabinet and carefully pull out the chassis assembly from the back cover, pushing down four push buttons. Insertion of the chassis assembly is complished by exactly the opposite order.

HOW TO ASSEMBLE THE DIAL STRING

After removing the circuit board as explained above, assemble the dial string in order of ① to ⑥ in figure 4.

110 Volt AC OPERATION: By use of an AC adapter the AM/FM radio model XH-1500 can be operated from normal 110 volt AC house current. A socket has been provided at the left end of the cabinet to permit use of an AC adapter. When the AC adapter is used there is no drain on the dry batteries.

Magnavox

AM-64 TRANSISTOR PORTABLE RADIO

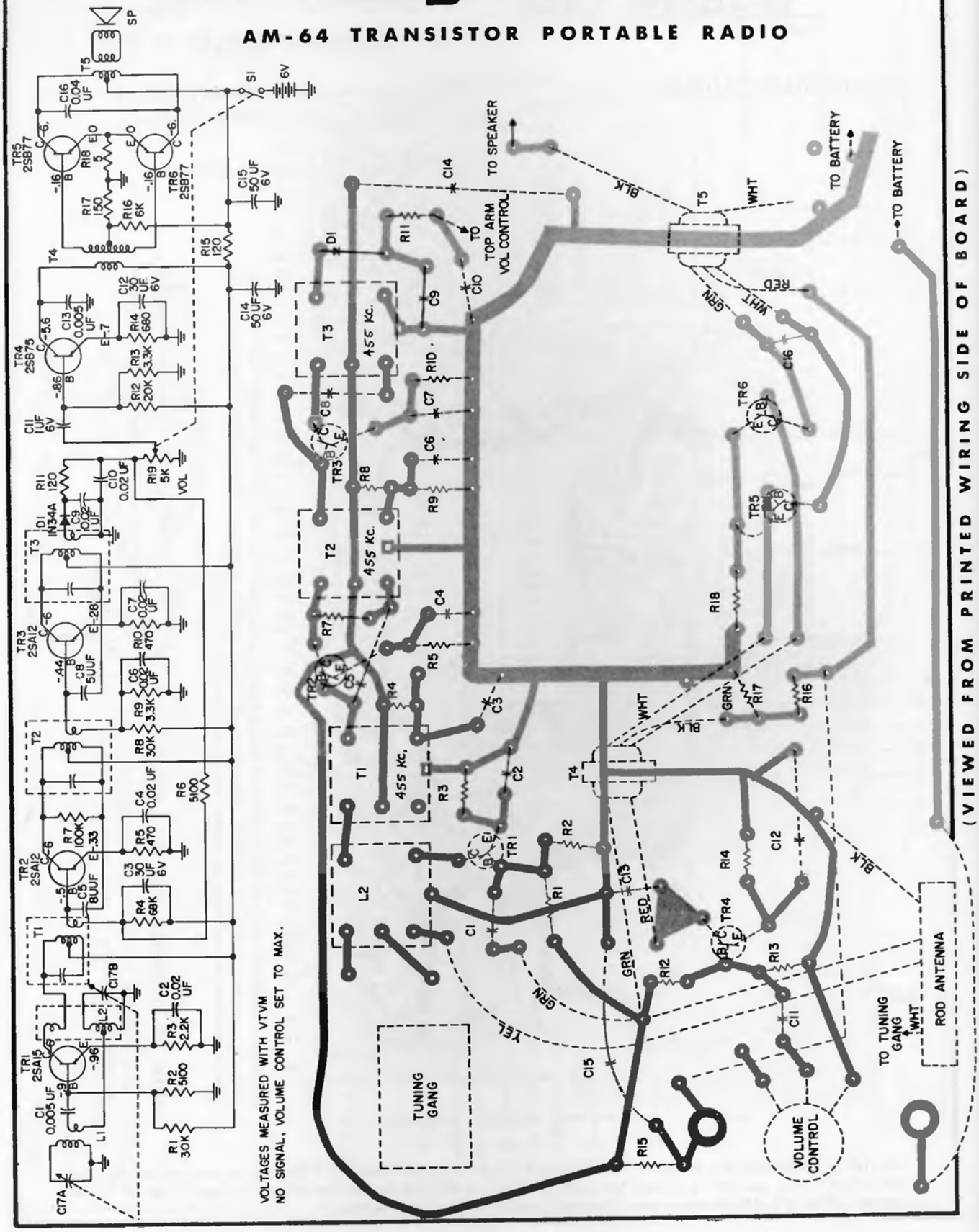

Magnavox

72 SERIES RADIO CHASSIS

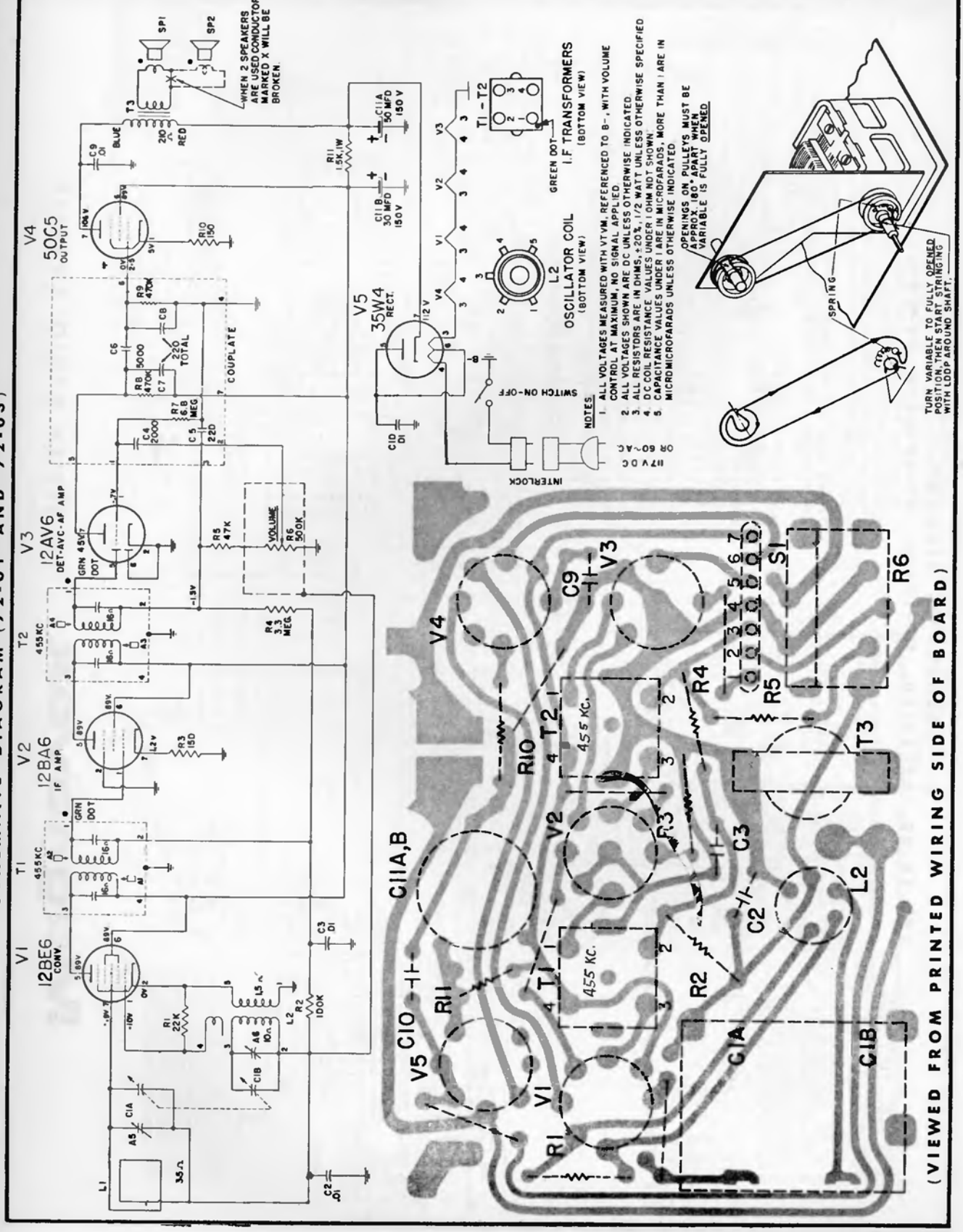

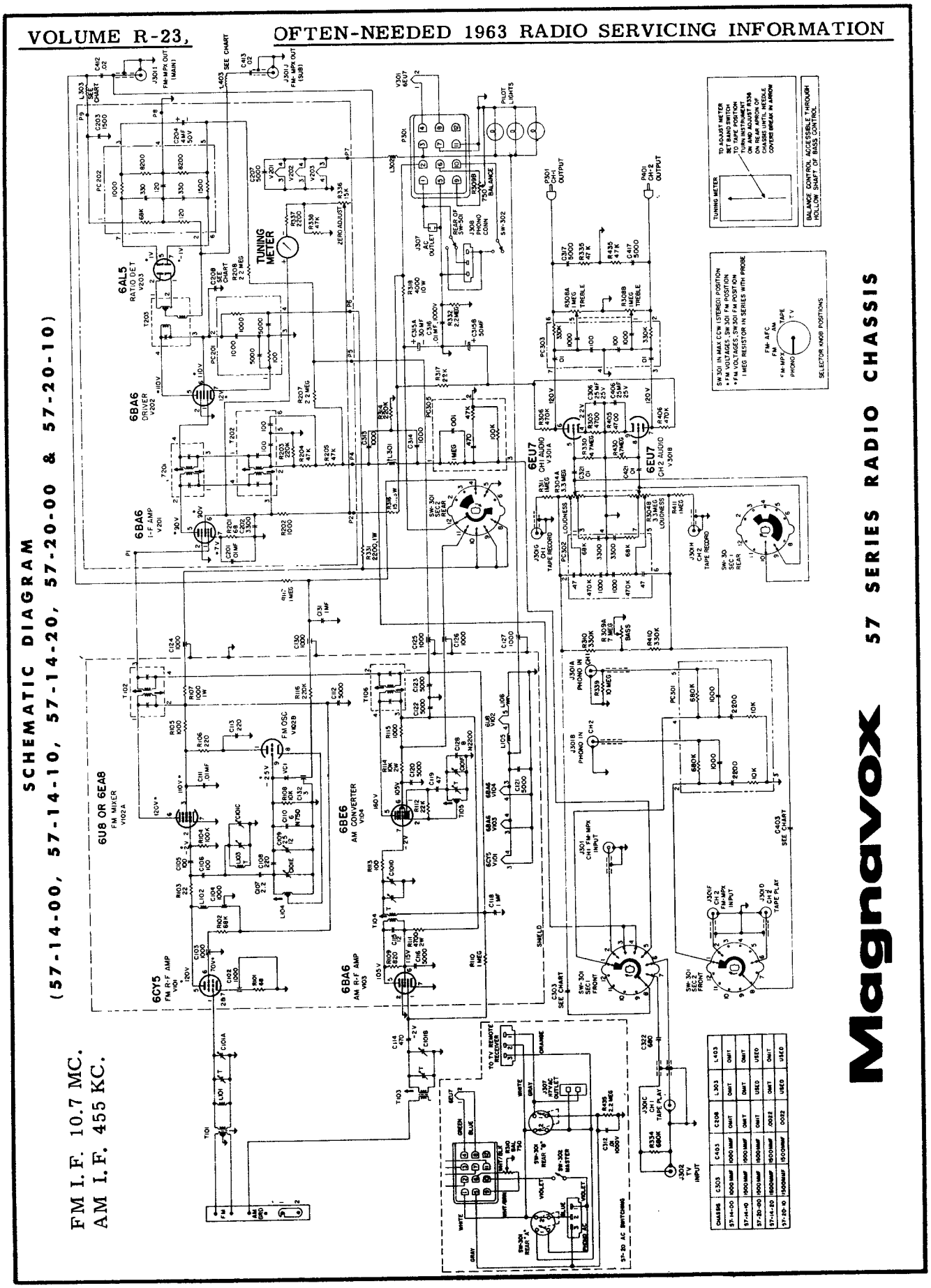
SCHEMATIC DIAGRAM
(57-14-00, 57-14-10, 57-14-20, 57-20-00 & 57-20-10)
FM I.F. 10.7 MC.
AM I.F. 455 KC.
Magnavox
57 SERIES RADIO CHASSIS
6AL5 RATIO DET
6BA6 DRIVER
6BA6 I-F AMP
6U8 OR 6EA8 FM MIXER
6CY5 FM R-F AMP
6BA6 AM R-F AMP
6BE6 AM CONVERTER
6EU7 CH1 AUDIO
6EU7 CH2 AUDIO
TUNING METER
BALANCE
SW-302
SW-301 REAR "A"
SW-301 REAR "B"
SW-301 MASTER
SW-301 SEC 1 FRONT
SW-301 SEC 2 FRONT
SW-30 SEC 1 REAR
SW-301 SEC 2 REAR
5Y-20 AC SWITCHING
TO TV REMOTE RECEIVER
TO ADJUST METER SET BAND SWITCH TO FM-AFC POSITION TURN INSTRUMENT ON AND ADJUST R336 TO ZERO. DO NOT REMOVE CHASSIS UNTIL NEEDLE COVERS BREAK IN ARROW
BALANCE CONTROL ACCESSIBLE THROUGH HOLLOW SHAFT OF BASS CONTROL
SELECTOR KNOB POSITIONS
SW-301 IN MAX CCW (STEREO) POSITION
• AM VOLTAGES, SW-301 AM POSITION
• FM VOLTAGES, SW-301 FM POSITION
1 MEG RESISTOR IN SERIES WITH PROBE
CHASSIS C303 C403 C208 L303 L403
57-14-00 1000 MMF OMIT OMIT OMIT OMIT
57-14-10 1500 MMF 1500 MMF OMIT OMIT OMIT
57-20-00 1500 MMF 1500 MMF OMIT USED USED
57-14-20 1500 MMF 1500 MMF .0022 OMIT OMIT
57-20-10 1500 MMF 1500 MMF 1500 MMF USED USED

MONTGOMERY WARD

MODEL GEN 1819A

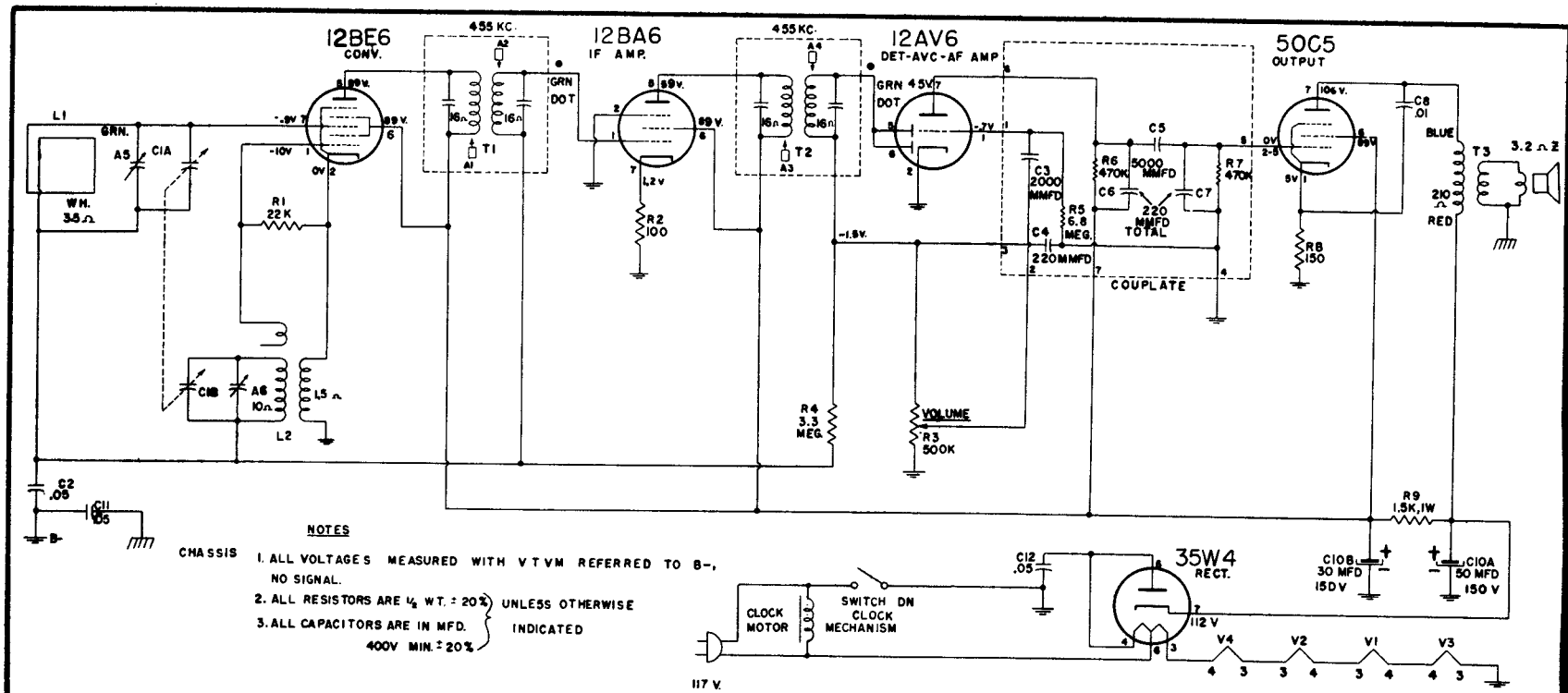

NOTES

1. ALL VOLTAGES MEASURED WITH VTVM REFERRED TO B-, NO SIGNAL.
2. ALL RESISTORS ARE ½ WT. ± 20% } UNLESS OTHERWISE
3. ALL CAPACITORS ARE IN MFD. 400V MIN. ± 20% } INDICATED

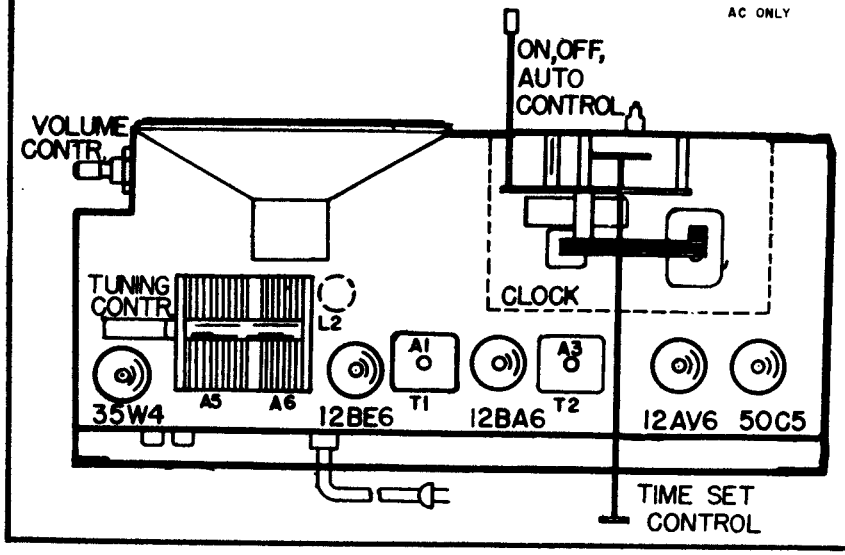

TIMER OPERATION

THE ELECTRIC CLOCK starts as soon as you plug the radio cord to any outlet supplying 105 to 120 volts, 60 cycle alternating current. To set the clock to the correct time, pull out and turn to the right the knurled disc of the time set control in the rear.

TO OPERATE THE RADIO, turn the clock selector knob to the left so its index points to "ON". Wait a few seconds for the tubes to warm up. Turn the tuning control knob to the desired station, tuning carefully for best and clearest reception.

TO TURN THE RADIO "OFF", turn the timer switch knob to the center position.

TO OPERATE THE RADIO AS A MUSICAL WAKE-UP ALARM during the next eleven hours:

1. Tune in the station which will carry the program desired.
2. Set the volume control knob at the level you want.
3) Push and lock the knurled disc of the time set control in the rear, and turn it to the right until the small white pointer indicates the time you want the radio to go on.
4) Turn timer switch to "AUTO". The radio will start to play by itself at the time set.

MONTGOMERY WARD

MODELS

GAA-2213 A GAA-2223 A
GAA-2243 A GAA-2253 A

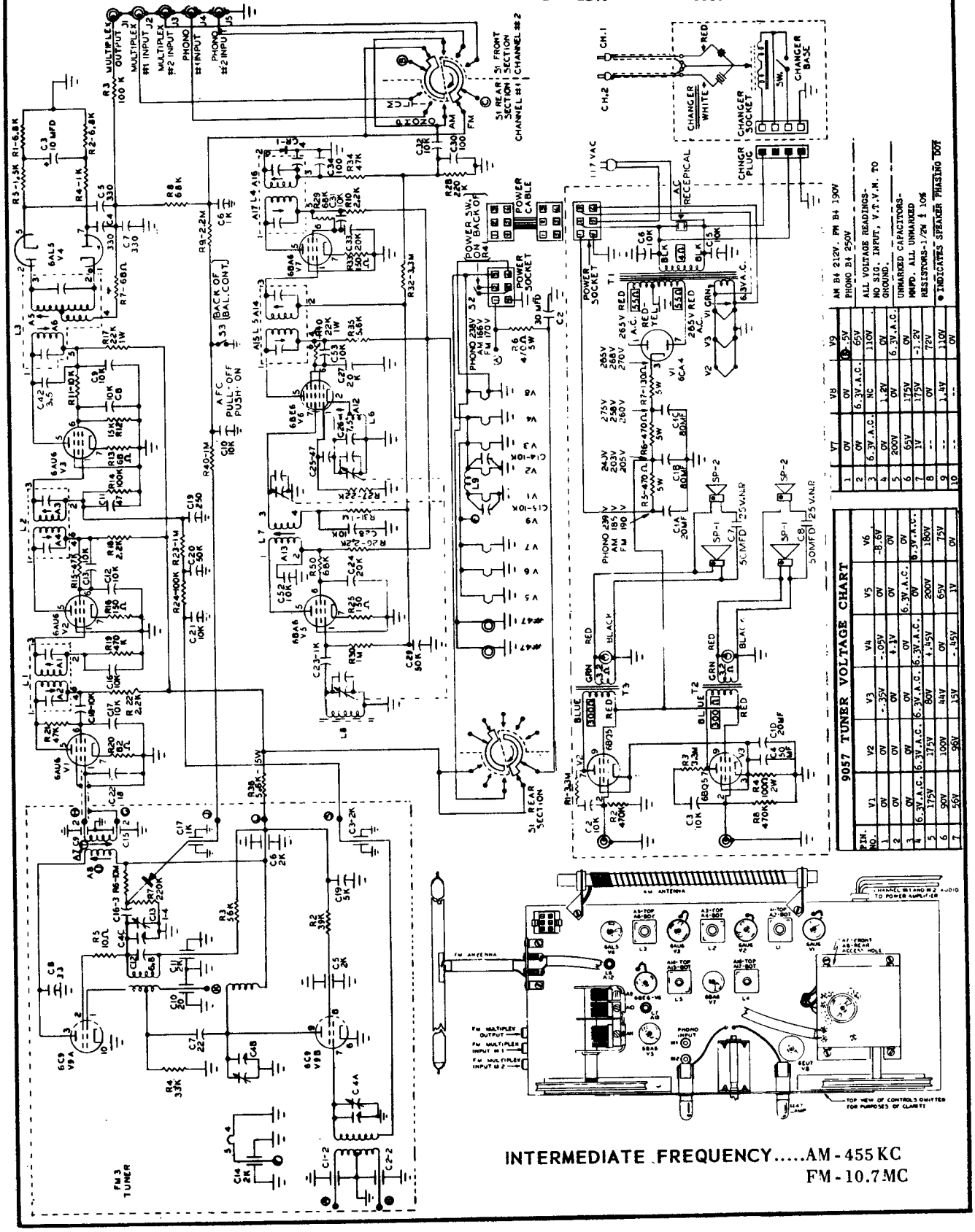

MOTOROLA

MOTOROLA	FORD
2TMF	C2AA-18806-M
2TMX	C2AA-18806-N
2TMY	C2YA-18806-E

CAUTION

"A" LEAD MUST BE CONNECTED TO POSITIVE (+) SIDE OF POWER SUPPLY. RADIO WILL NOT OPERATE AND DAMAGE TO COMPONENTS WILL RESULT IF CONNECTED OTHERWISE.

PLATED CHASSIS BOARD DESCRIPTION - Motorola's placir chassis has plating on both sides of the chassis board. The exposed side contains the actual circuit connections while the plating on the component side of the chassis board provides a convenient chassis B-return for components and circuit wiring.

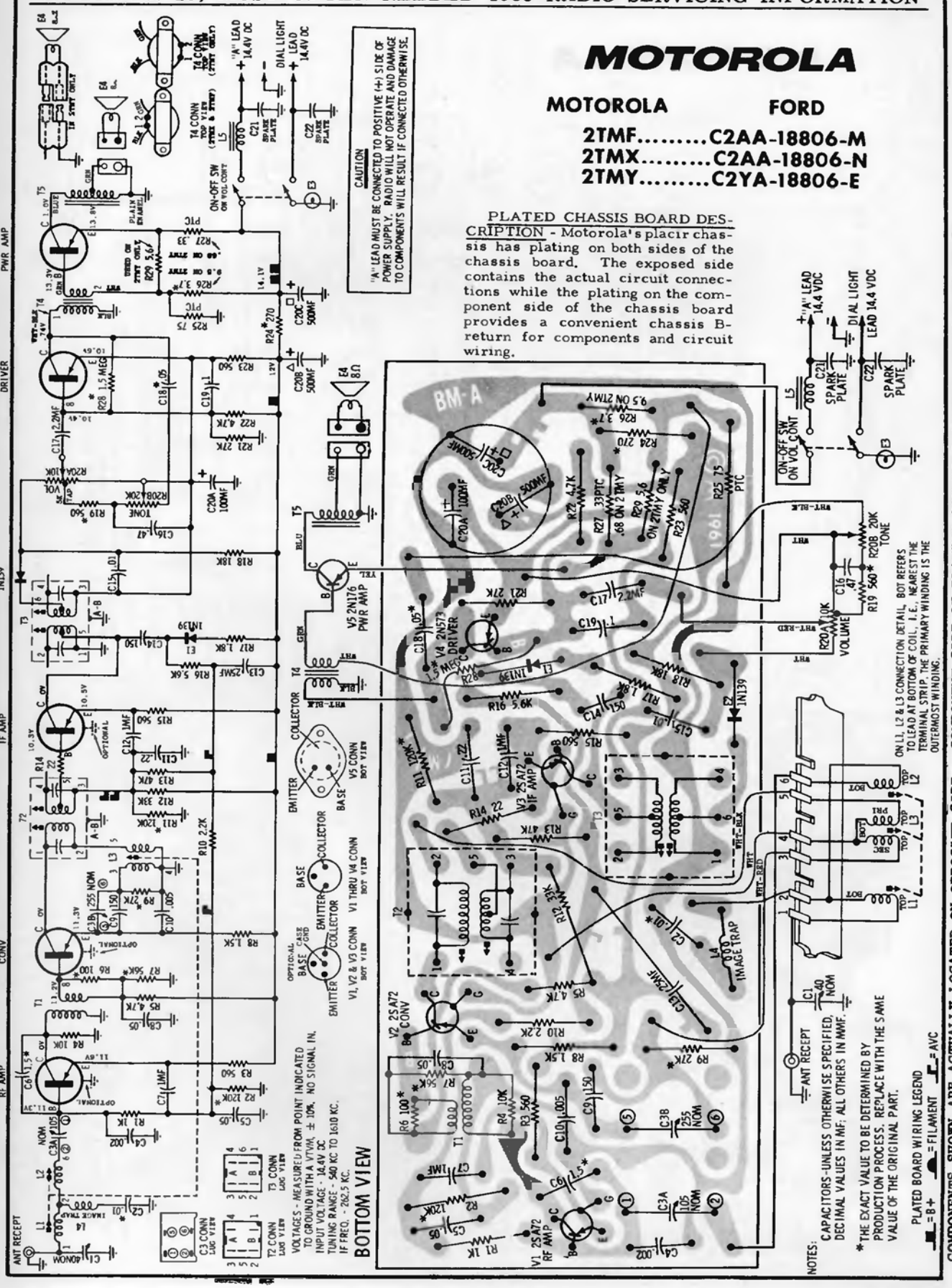

MOTOROLA

MODEL 2AT

MOTOROLA Model 2AT

(Alignment information on page 81)

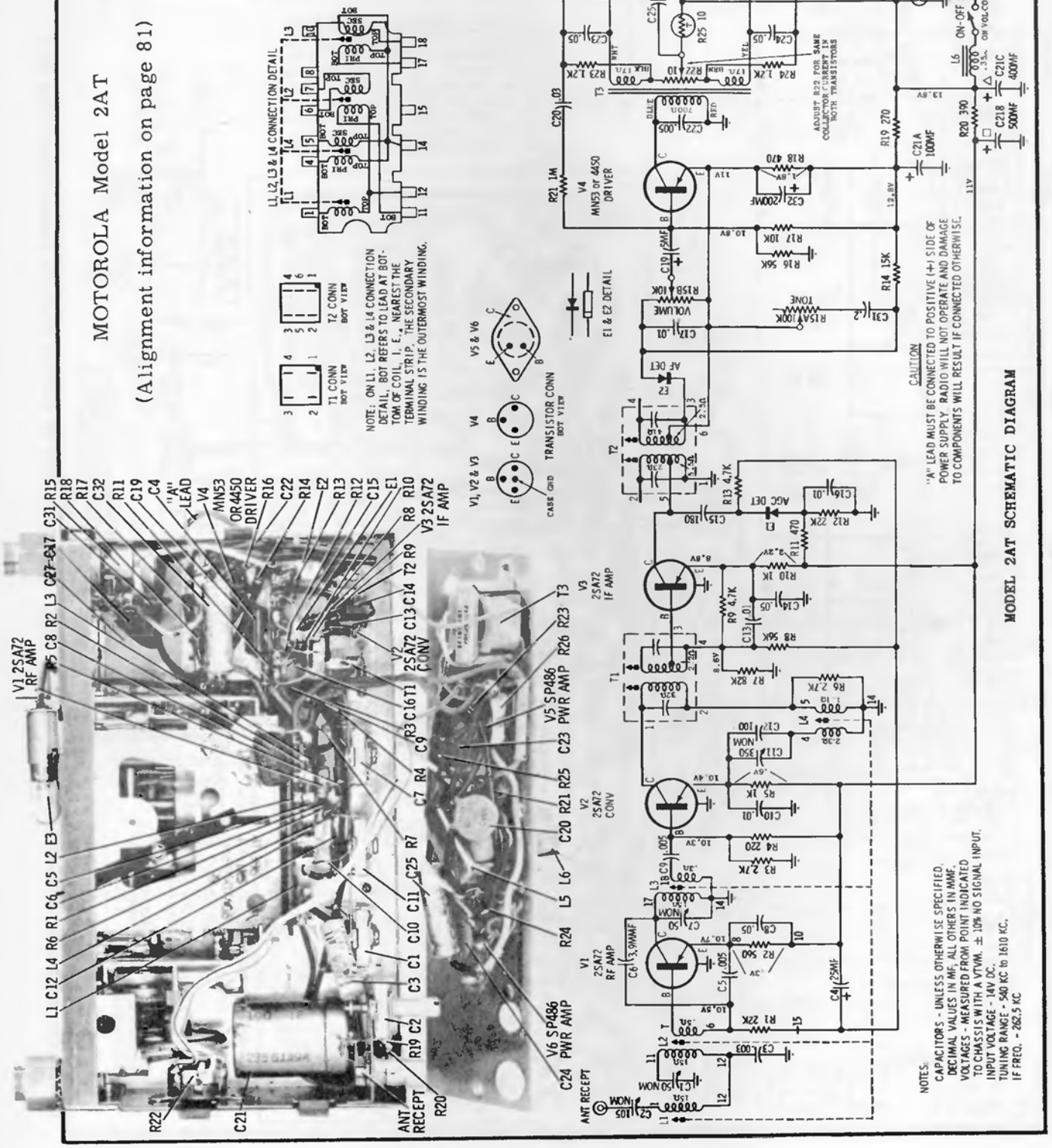

MOTOROLA Model 2MT

(Alignment information is on page 81)

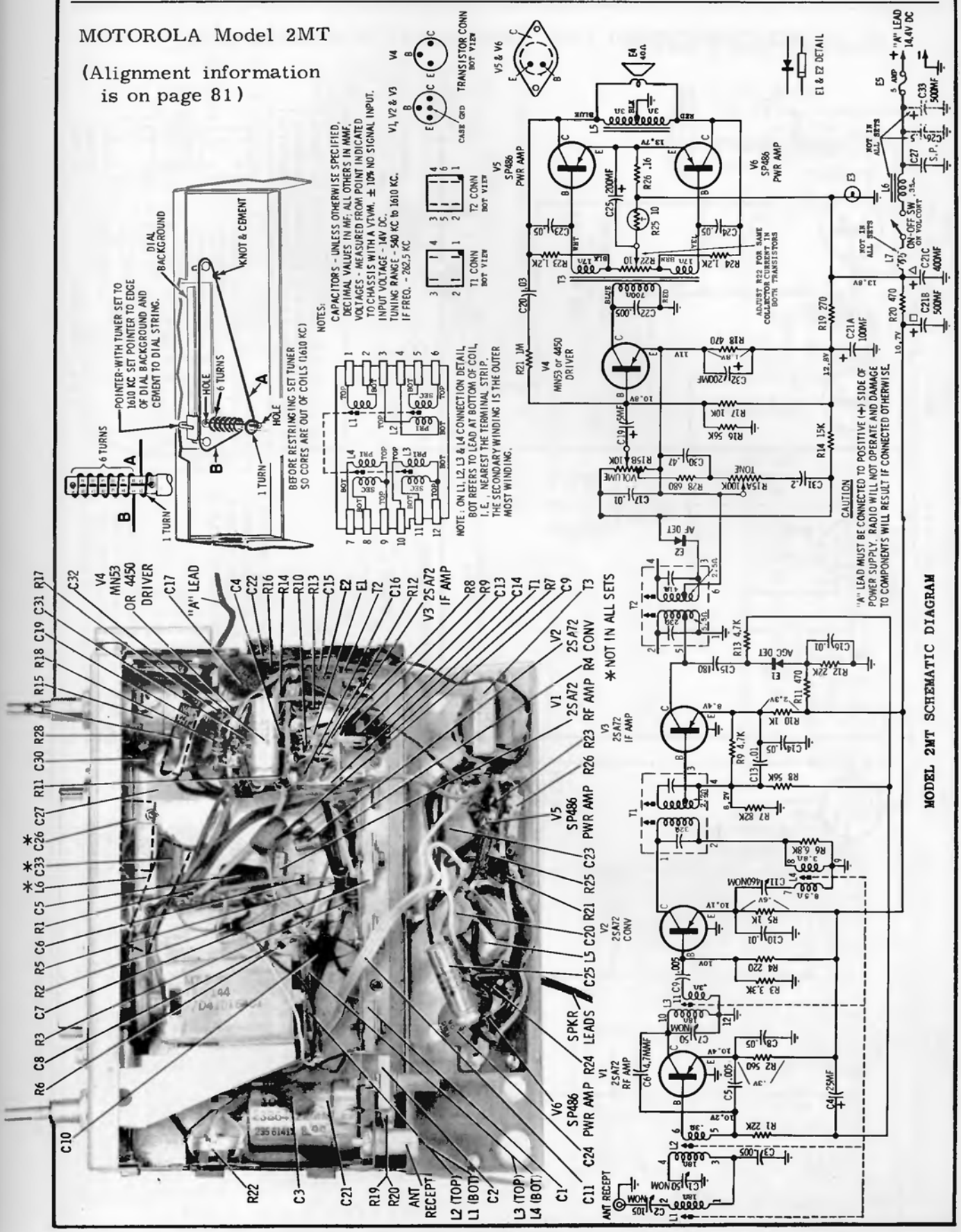

MOTOROLA Model 250X (See page 81 for alignment data)

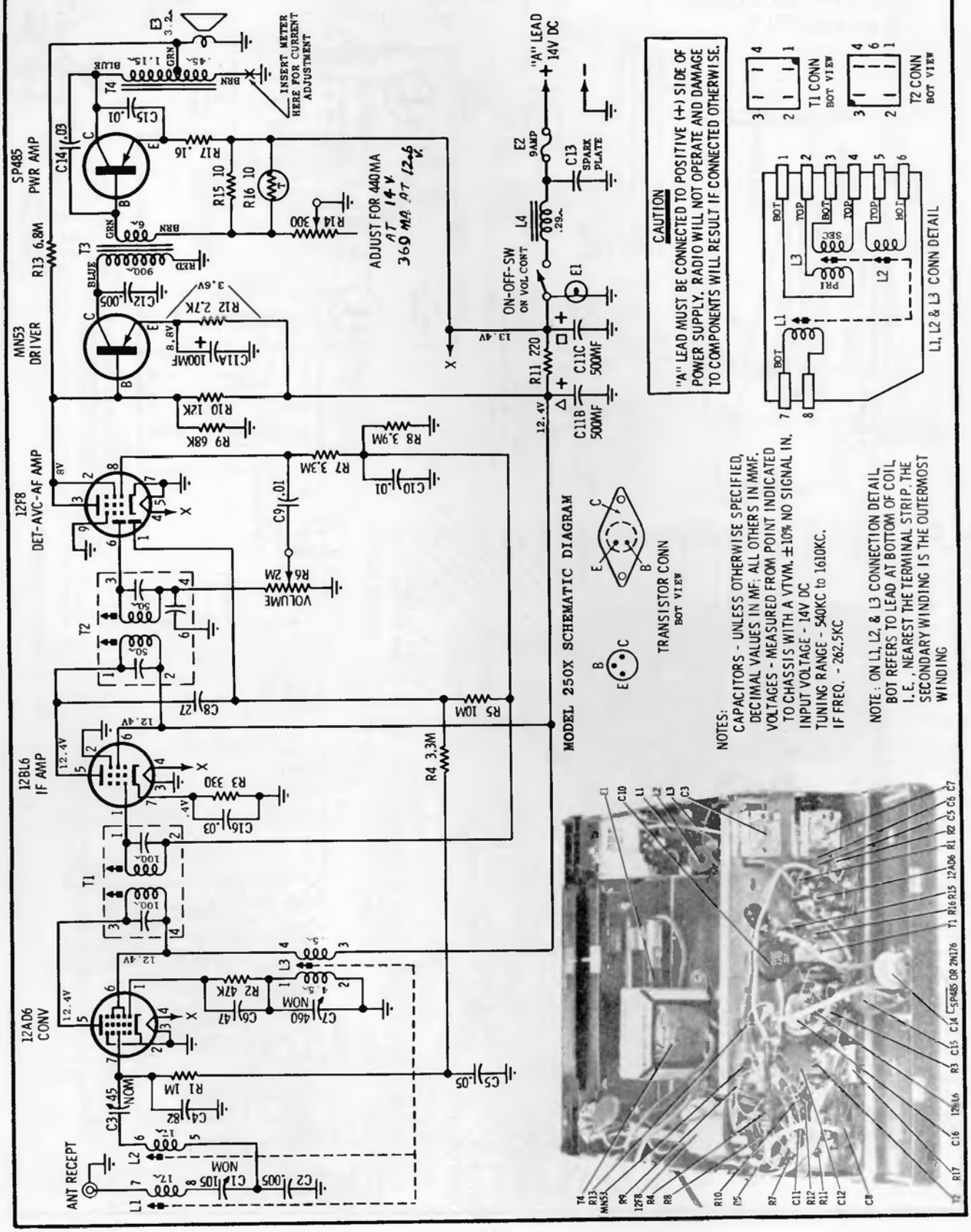

MODEL 250X PARTS LOCATION

MOTOROLA

Model 320X

(Alignment information is on page 81)

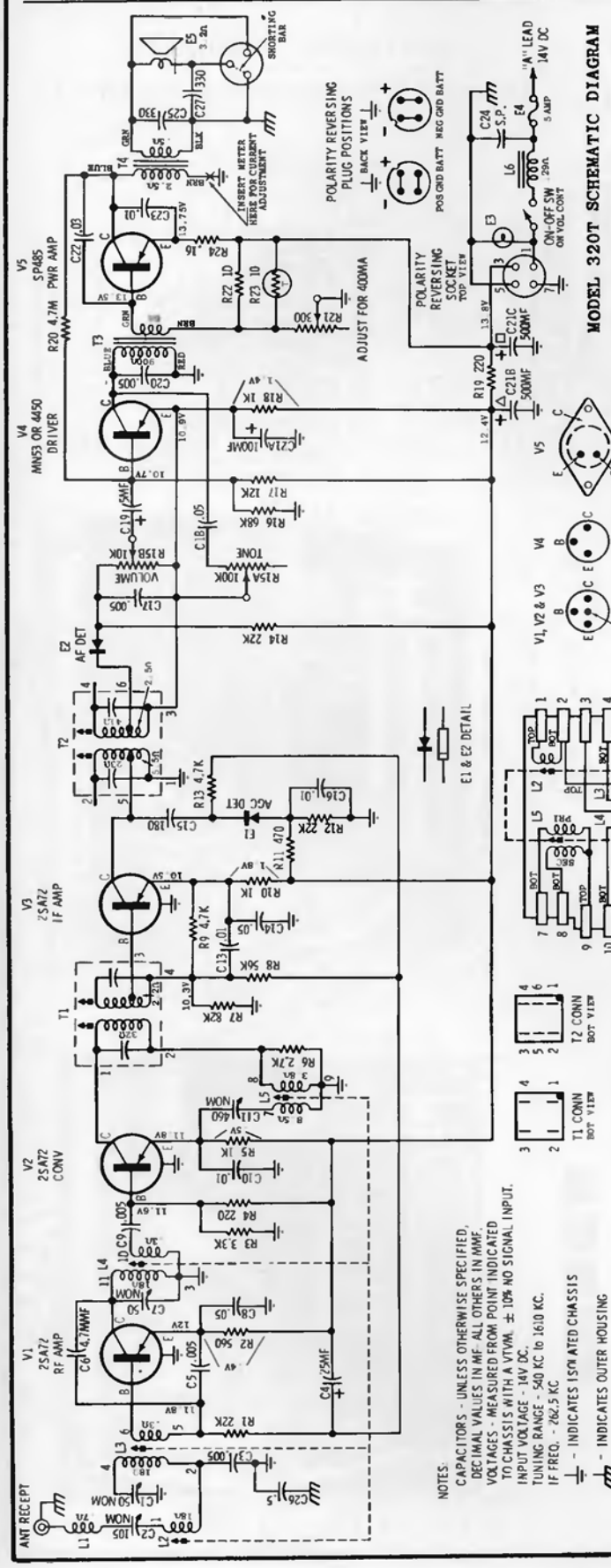

CAUTION

BEFORE CONNECTING "A" LEAD, BATTERY POLARITY SHOULD BE CHECKED AND POLARITY REVERSING PLUG SHOULD BE CHANGED CORRESPONDINGLY; OTHERWISE SET WILL NOT OPERATE AND DAMAGE TO COMPONENTS WILL RESULT.

NOTE: ON L2, L3, L4 & L5 CONNECTION DETAIL, BOT REFERS TO LEAD AT BOTTOM OF COIL, I.E., NEAREST THE TERMINAL STRIP. THE SECONDARY WINDING IS THE OUTERMOST WINDING.

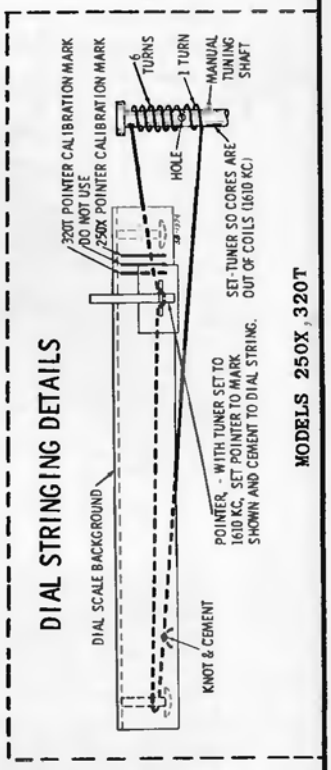

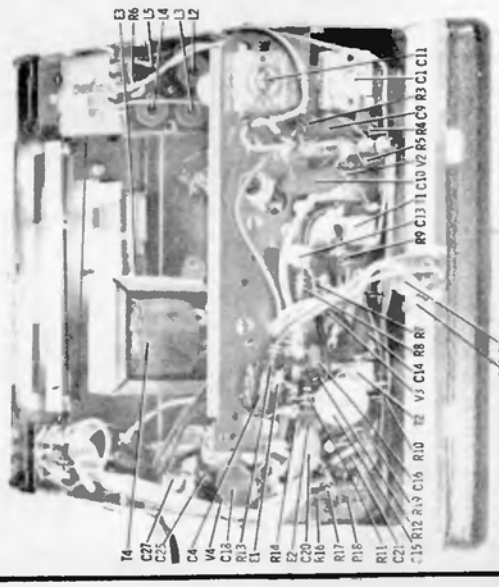

MOTOROLA Model 520T

(Alignment information is on page 81)

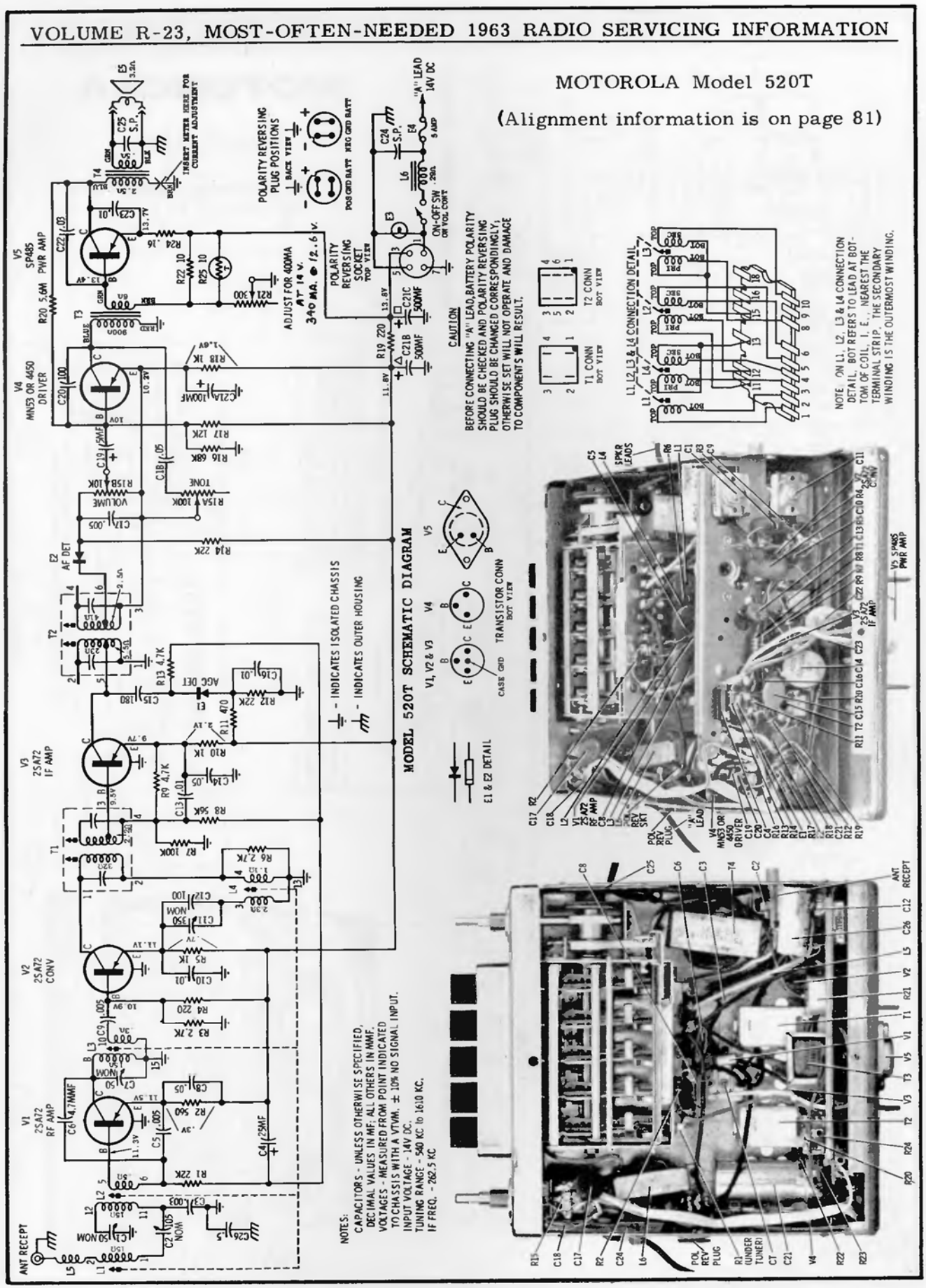

MODEL 520T PARTS LOCATION

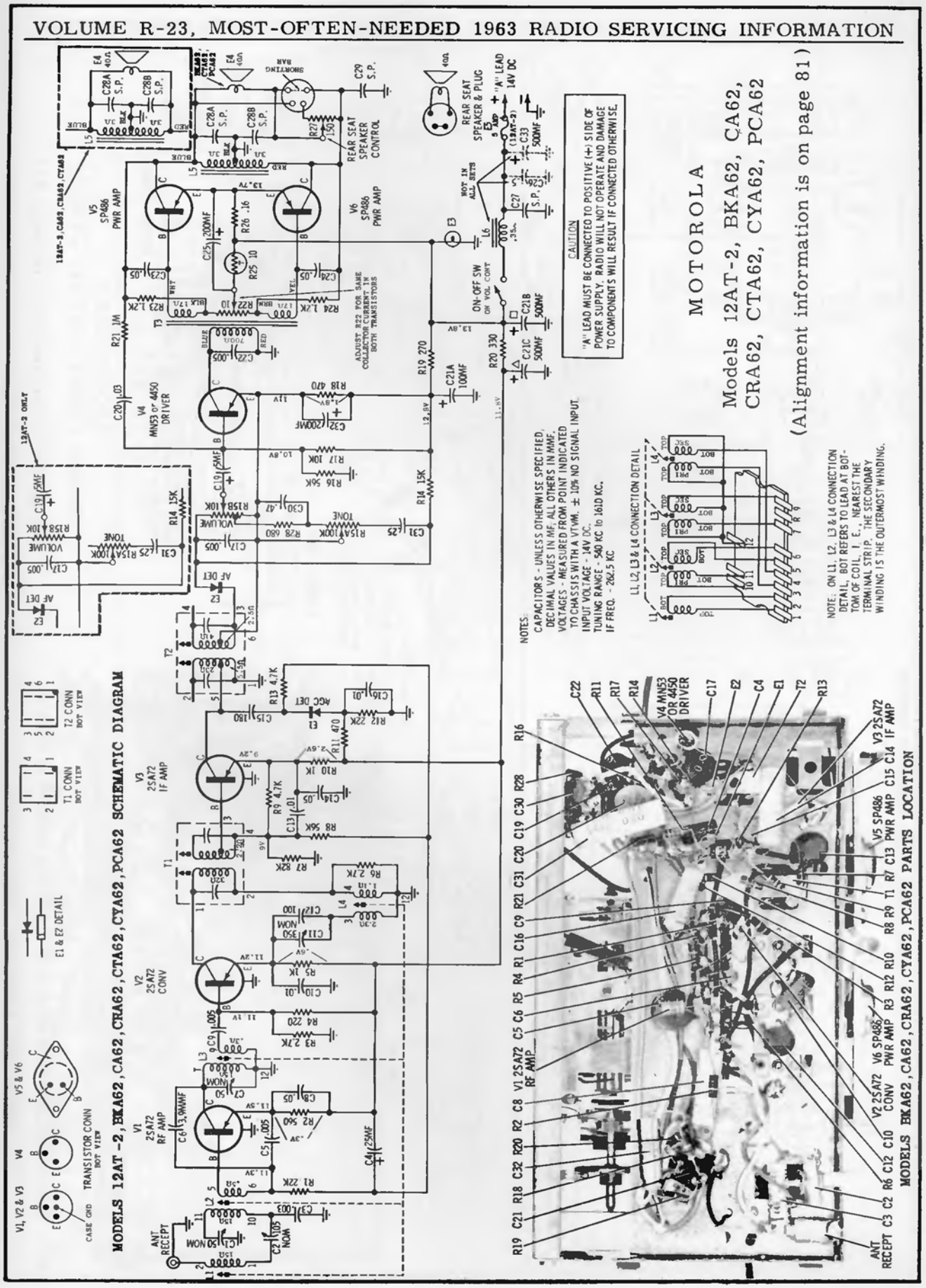
MODELS 12AT-2, BKA62, CA62, CRA62, CTA62, CYA62, PCA62 SCHEMATIC DIAGRAM
MODELS BKA62, CA62, CRA62, CYA62, PCA62 PARTS LOCATION
MOTOROLA
Models 12AT-2, BKA62, CA62, CRA62, CTA62, CYA62, PCA62
(Alignment information is on page 81)
CAUTION
"A" LEAD MUST BE CONNECTED TO POSITIVE (+) SIDE OF POWER SUPPLY. RADIO WILL NOT OPERATE AND DAMAGE TO COMPONENTS WILL RESULT IF CONNECTED OTHERWISE.
NOTES:
CAPACITORS - UNLESS OTHERWISE SPECIFIED, DECIMAL VALUES IN MF, ALL OTHERS IN MMF.
VOLTAGES - MEASURED FROM POINT INDICATED TO CHASSIS WITH A VTVM. ± 10% NO SIGNAL INPUT.
INPUT VOLTAGE - 14V DC.
TUNING RANGE - 540 KC. to 1610 KC.
IF FREQ. - 262.5 KC.
L1, L2, L3 & L4 CONNECTION DETAIL
NOTE: ON L1, L2, L3 & L4 CONNECTION DETAIL, BOT REFERS TO LEAD AT BOTTOM OF COIL, I. E., NEAREST THE TERMINAL STRIP. THE SECONDARY WINDING IS THE OUTERMOST WINDING.
V1, V2 & V3
V4
V5 & V6
TRANSISTOR CONN BOT VIEW
E1 & E2 DETAIL
T1 CONN BOT VIEW
T2 CONN BOT VIEW
V1 2SA72 RF AMP
V2 2SA72 CONV
V3 2SA72 IF AMP
V4 MN53 OR 4450 DRIVER
V5 SP486 PWR AMP
V6 SP486 PWR AMP
REAR SEAT SPEAKER CONTROL
REAR SEAT SPEAKER & PLUG
ON-OFF SW ON VOL CONT
ADJUST R22 FOR SAME COLLECTOR CURRENT IN BOTH TRANSISTORS
VOLUME
TONE
AF DET
AGC DET
ANT RECEPT
CASE GND
12AT-2 ONLY
"A" LEAD 14V DC

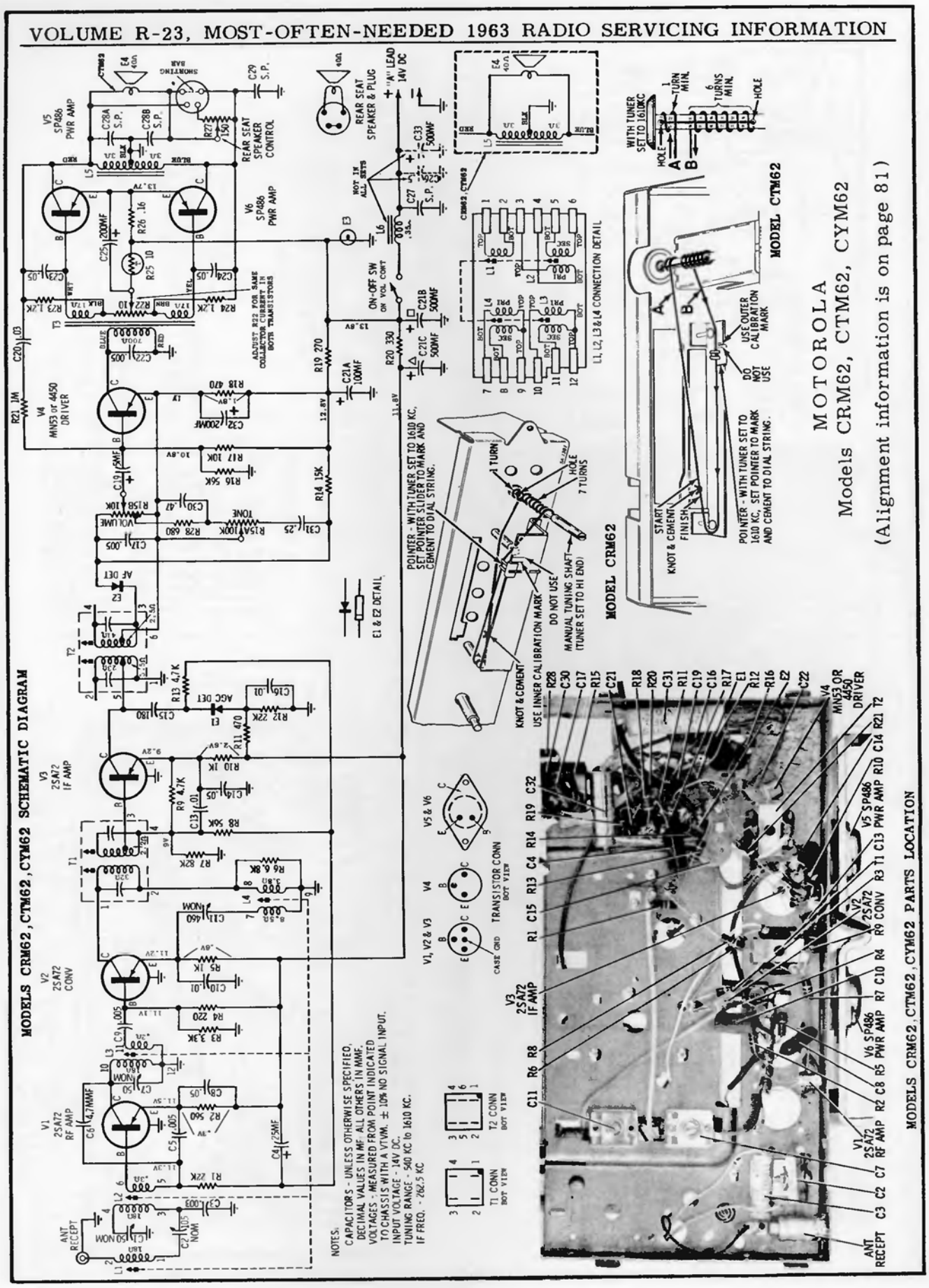
MODELS CRM62, CTM62, CYM62 SCHEMATIC DIAGRAM
MODELS CRM62, CTM62, CYM62 PARTS LOCATION
MOTOROLA
Models CRM62, CTM62, CYM62
(Alignment information is on page 81)
MODEL CRM62
MODEL CTM62
NOTES:
CAPACITORS - UNLESS OTHERWISE SPECIFIED, DECIMAL VALUES IN MF. ALL OTHERS IN MMF.
VOLTAGES - MEASURED FROM POINT INDICATED TO CHASSIS WITH A VTVM. ± 10% NO SIGNAL INPUT.
INPUT VOLTAGE - 14V DC.
TUNING RANGE - 540 KC to 1610 KC.
IF FREQ. - 262.5 KC
REAR SEAT SPEAKER & PLUG
REAR SEAT SPEAKER CONTROL
ON-OFF SW ON VOL CONT
ADJUST R22 FOR SAME COLLECTOR CURRENT IN BOTH TRANSISTORS
L1, L2, L3 & L4 CONNECTION DETAIL
E1 & E2 DETAIL
POINTER - WITH TUNER SET TO 1610 KC, SET POINTER SLIDER TO MARK AND CEMENT TO DIAL STRING.
KNOT & CEMENT
USE INNER CALIBRATION MARK
DO NOT USE
MANUAL TUNING SHAFT (TUNER SET TO HI END)
WITH TUNER SET TO 1610KC
USE OUTER CALIBRATION MARK
POINTER - WITH TUNER SET TO 1610 KC. SET POINTER TO MARK AND CEMENT TO DIAL STRING.
START
FINISH
TRANSISTOR CONN BOT VIEW
T1 CONN BOT VIEW
T2 CONN BOT VIEW

MOTOROLA Alignment Information for various auto sets covered on preceding pages

Connect an output meter across the speaker voice coil. Set volume to maximum and tone to treble. Attenuate signal generator output to maintain 1 watt (1.79 volts across a 3.2 ohm load for models 250X, 320T and 520T; 6.33 volts across a 40 ohm load for all other models) on output meter at all times.

STEP	GENERATOR CONNECTION	GEN FREQ (400 cycle 30% mod)	TUNER SET TO	ADJUST	REMARKS
IF ALIGNMENT					
1.	To ant recept (250X) or collector of RF amp (all other models) thru .1mf & chassis	262.5 Kc	Hi end stop	1,2,3 & 4	Adjust for maximum
RF ALIGNMENT					
2.	Ant recept thru dummy (see figure)	1610 Kc	Hi end stop	5,6,7* & 8	Adjust for maximum
NOTE:	Do not perform steps 3, 4, 5 & 6 unless the tuner has been tampered with or associated components have been replaced. If necessary, remove the escutcheon, dial background and the pilot light socket to expose the core screws. Before proceeding with step 3, back the tuning cores as far as possible out of the coils to eliminate their effect on trimmer adjustments.				
3.	Ant recept thru dummy (see figure)	1610 Kc.	Hi end stop	5,6,7* & 8	Adjust for maximum
4.	"	1200 Kc (push-button models); 1020 Kc (manually tuned models)	Tuner carriage .285" (push-button models); .298" (manually tuned models) from Hi end stop	9,10,11 & 12*	Adjust for maximum
5.	"	1610 Kc	Hi end stop	5,6,7* & 8	Adjust for maximum
6.	Repeat steps 4 and 5 until no further increase; step 5 should be last step. Then cement core screws in place.				
ANTENNA TRIMMER					
7.			Weak station around 1400 Kc	8	Adjust for maximum with radio installed in car and antenna fully extended.

*Model 250X does not have adjustments 7 and 12.

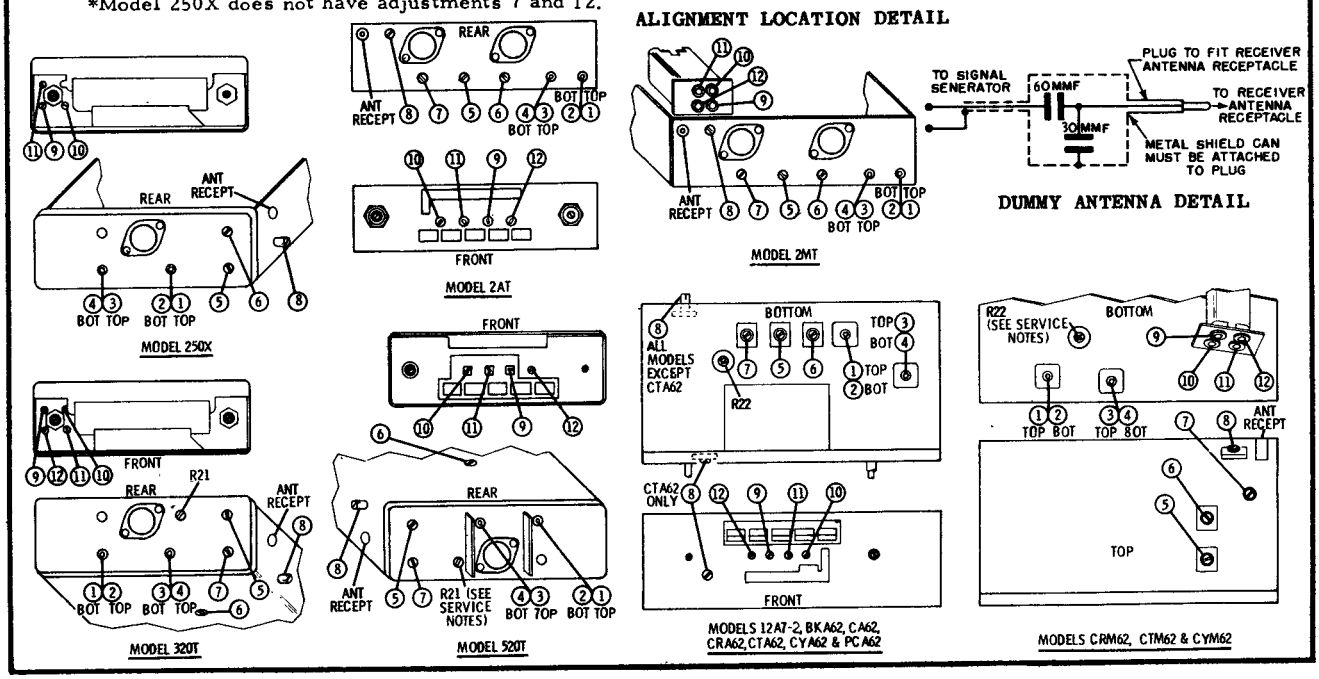

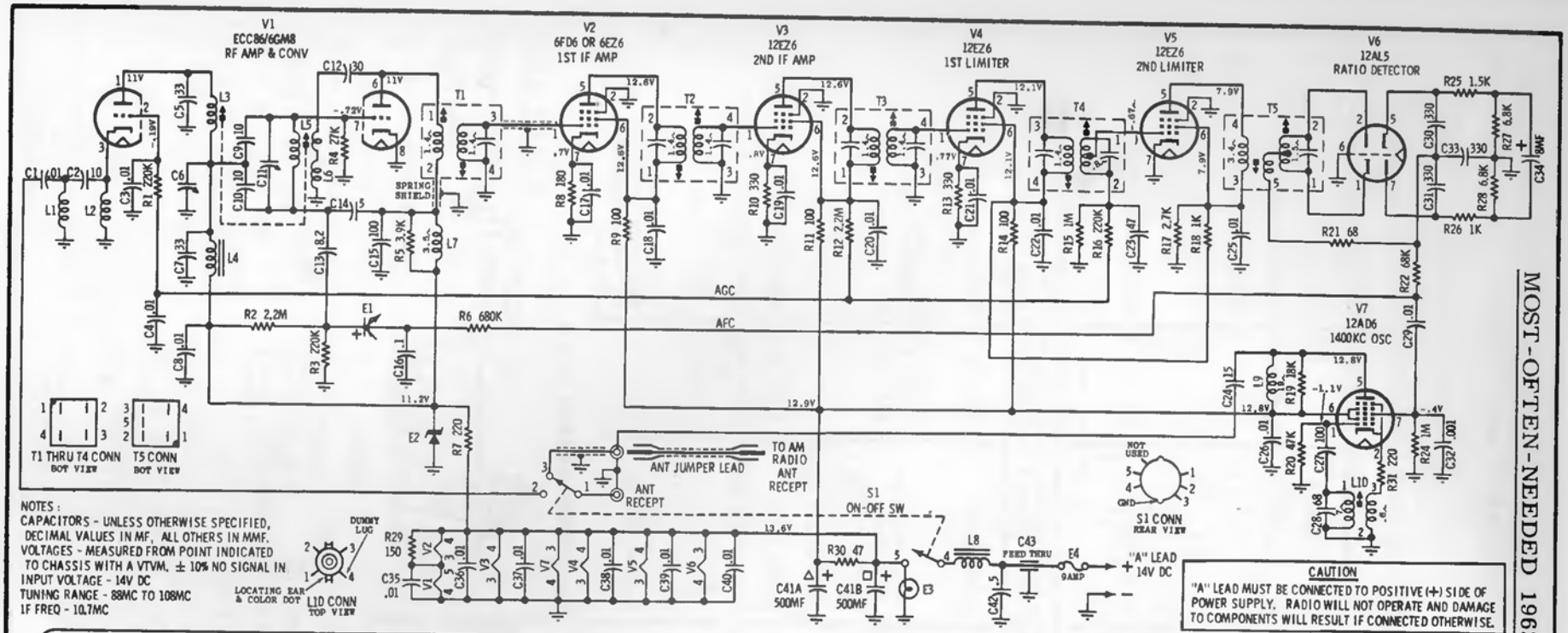

NOTES:
CAPACITORS - UNLESS OTHERWISE SPECIFIED, DECIMAL VALUES IN MF, ALL OTHERS IN MMF.
VOLTAGES - MEASURED FROM POINT INDICATED TO CHASSIS WITH A VTVM. ± 10% NO SIGNAL IN.
INPUT VOLTAGE - 14V DC
TUNING RANGE - 88MC TO 108MC
IF FREQ - 10.7MC

CAUTION
"A" LEAD MUST BE CONNECTED TO POSITIVE (+) SIDE OF POWER SUPPLY. RADIO WILL NOT OPERATE AND DAMAGE TO COMPONENTS WILL RESULT IF CONNECTED OTHERWISE.

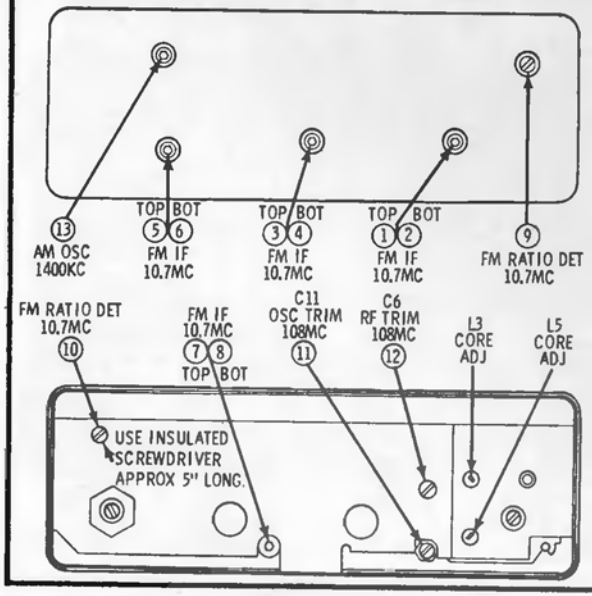

FMC62 ALIGNMENT LOCATION POINTS

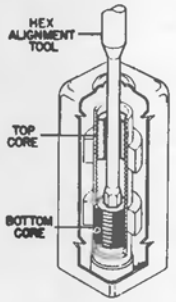

IF ALIGNMENT DETAIL

CIRCUIT DESCRIPTION

Model FMC62 is an Universal FM tuner for underdash installations in all cars with 12 volt negative ground electrical systems and previously installed AM radios. The tuner receives FM signals, converts them to 1400 Kc AM which is, in turn, fed to the AM radio via the antenna input.

The tuner is a super-heterodyne FM receiver containing seven tubes with one RF, two IF, two limiters, a ratio detector and a 1400 Kc oscillator stage. After detection, the demodulated FM signal is applied to the 1400 Kc oscillator. The resultant AM signal is fed to the AM radio through its antenna input. An on-off switch on the tuner also controls the antenna switching. When the tuner is turned on, the antenna is automatically disconnected from the AM radio and connected to the FM tuner.

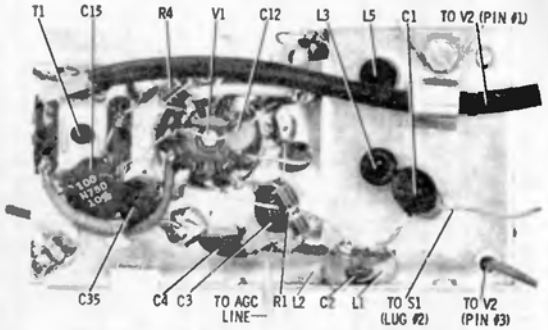

MODEL FMC62 TUNER PARTS LOCATION

MOTOROLA

MODEL FMC 62

MOTOROLA

MODELS AX4, AX5 **CHASSIS** HS-918, HS-919

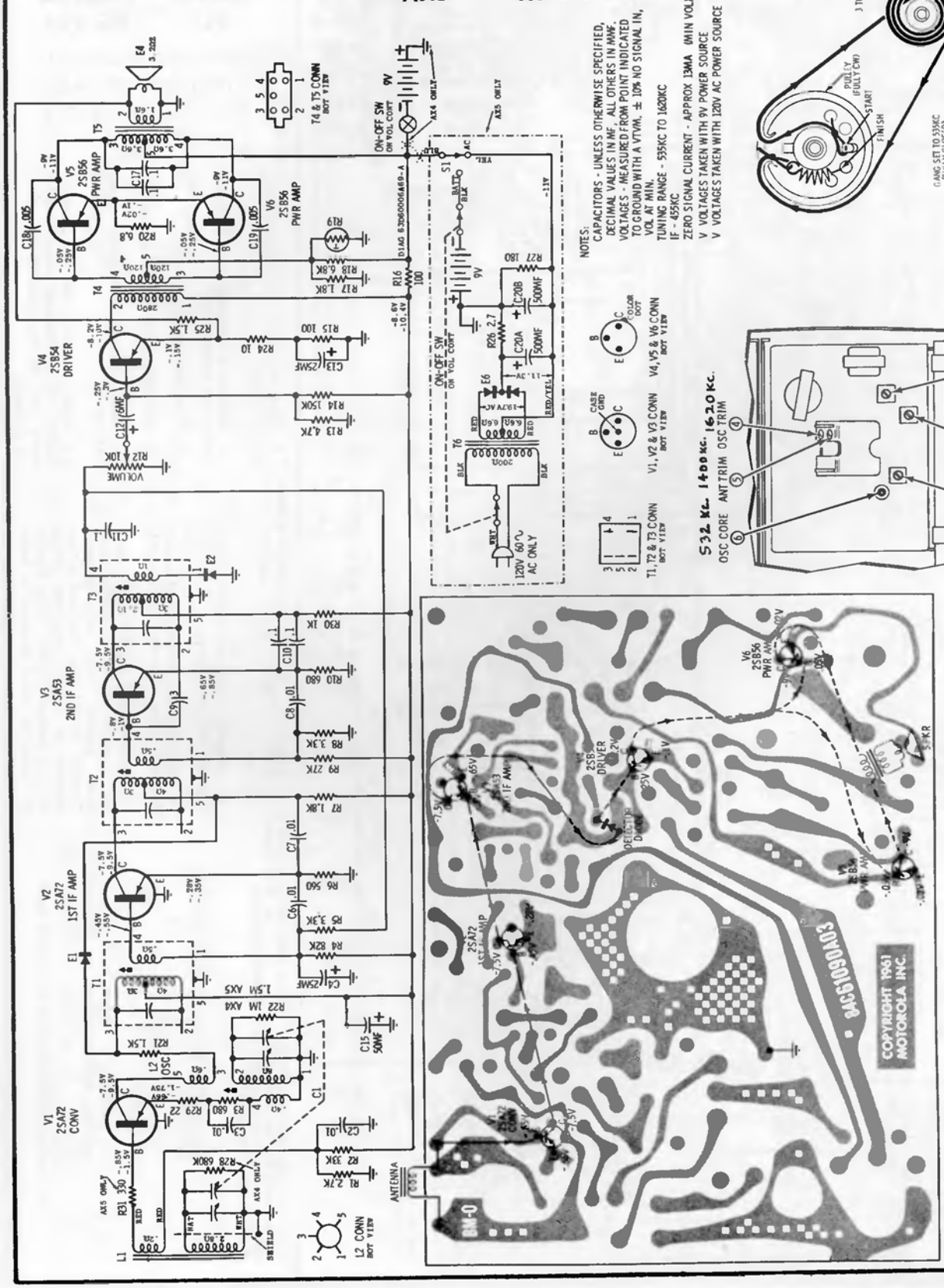

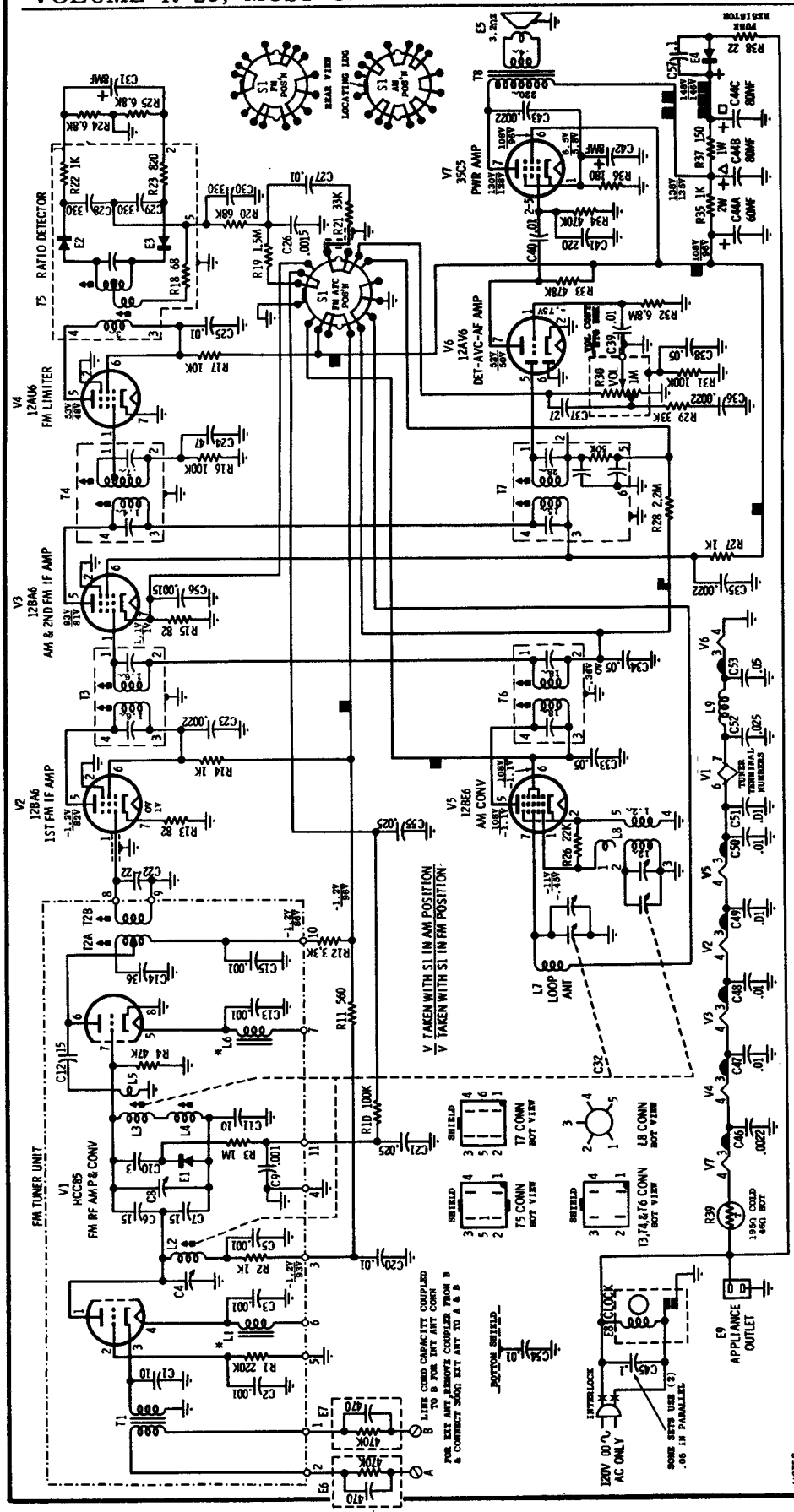

MOTOROLA

MODEL BC1 CHASSIS HS-923

(Service material continued on page 85, on the right)

TO REMOVE CHASSIS FROM CABINET

1. Remove control knob - pull straight off.
2. Remove 5 clutch head screws holding cabinet back to cabinet.
3. Unsolder leads to cabinet back.
4. Remove two screws holding chassis support channel.
5. Remove two screws that mount the AM gang bracket to cabinet.
6. Remove dial crystal from cabinet - reach in back of set and push down plastic tabs with fingers. Crystal should slip forward at top. Bottom of crystal has tabs which fit into cabinet slots. Care should be taken to avoid damage to tabs.
7. Remove dial pointer - pull straight out.
8. Remove 2 chassis mounting palnuts from front of radio.
9. Unsolder speaker leads.
10. Unsolder lead of bottom shield.
11. Slide AM loop out of slots inside cabinet.
12. Slide chassis out of cabinet. (Clock & Appliance outlet leads need not be diconnected to work on chassis).

MOTOROLA
Model BC1, Chassis HS-923
(Continued)

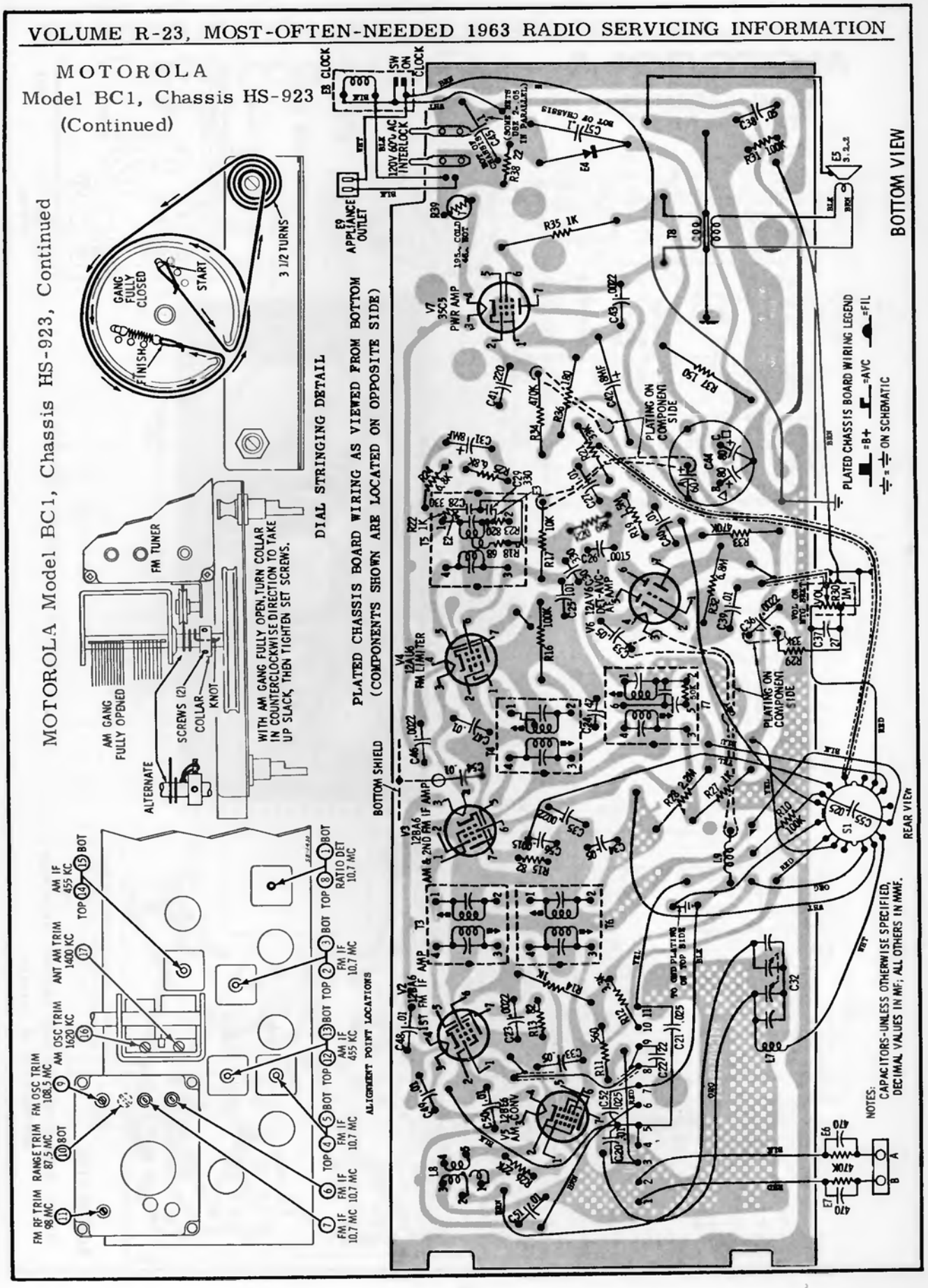

MOTOROLA

MODEL CX1 — CHASSIS HS-877

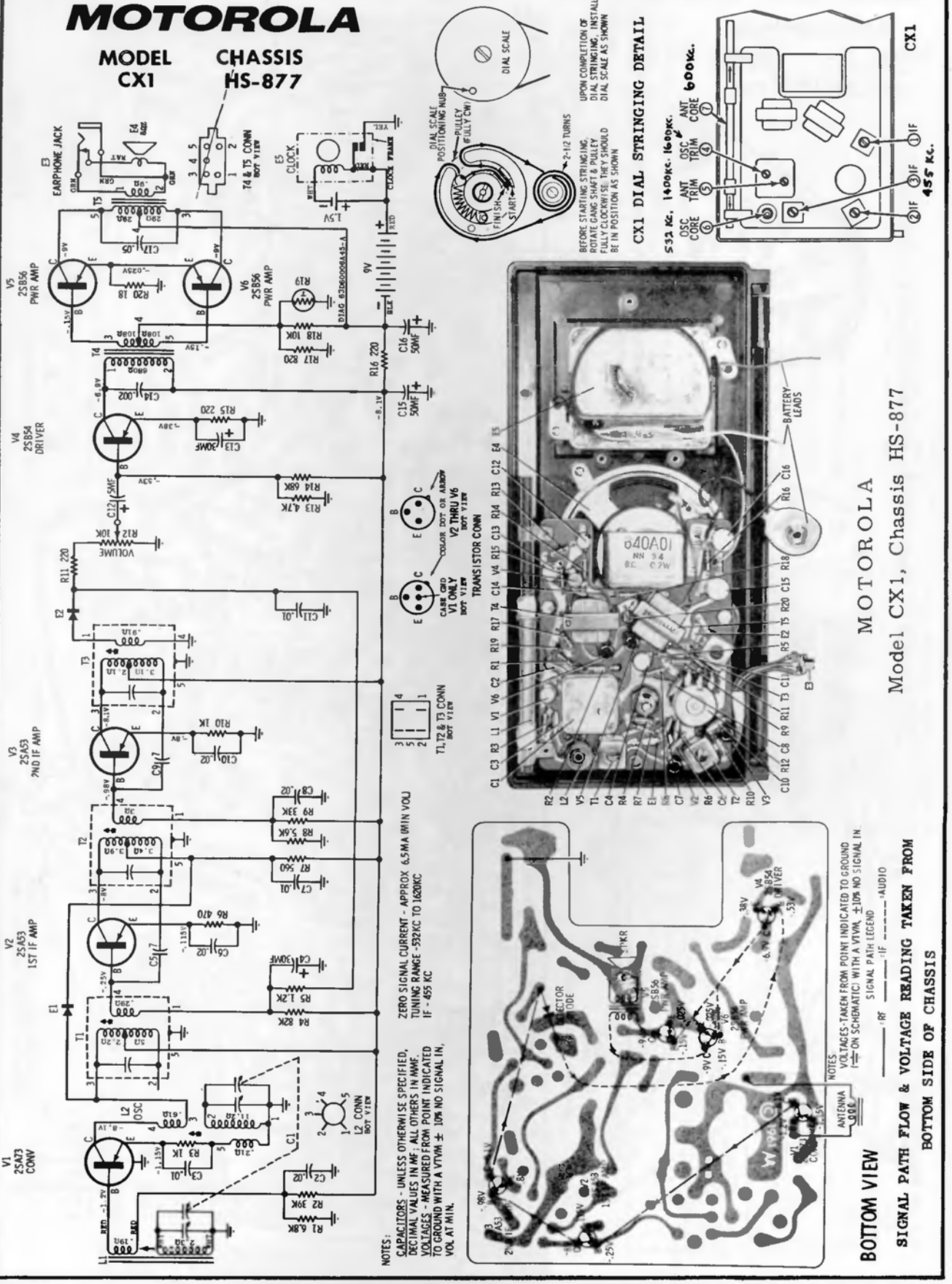

MOTOROLA

Chassis HS-939, HS-981

MODELS A21,A22 SERIES C21,C22,C23 SERIES

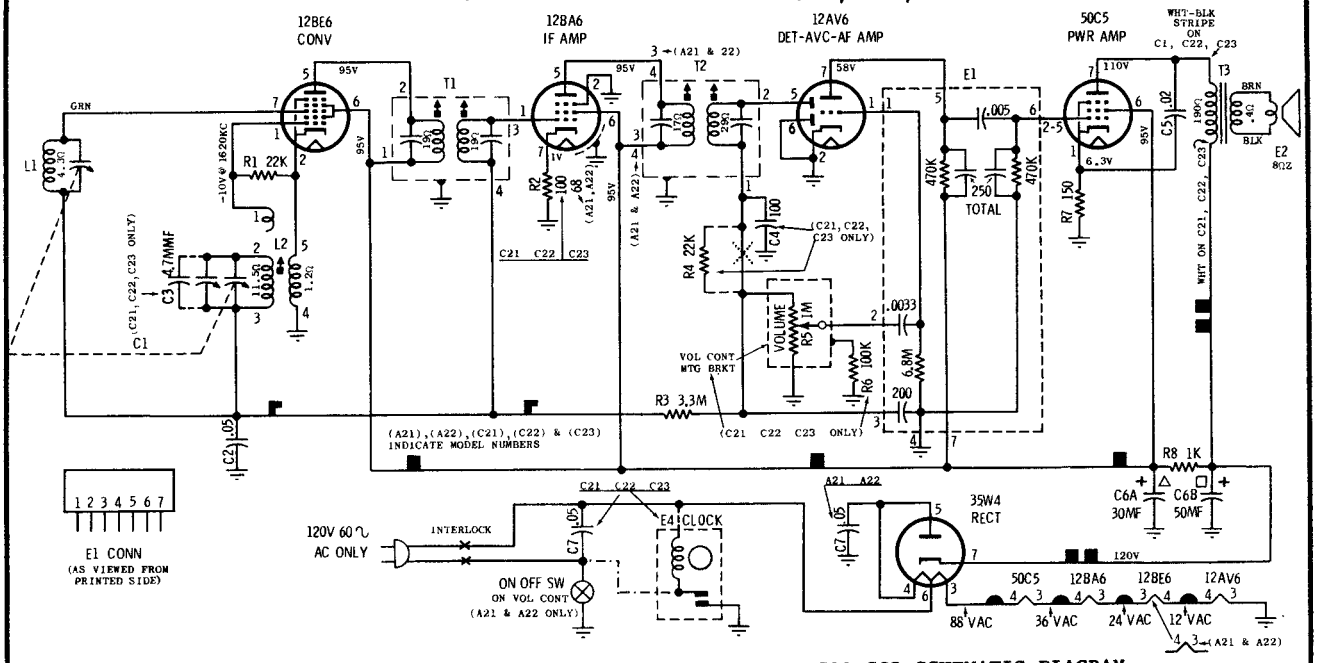

MODELS A21,A22,C21,C22,C23 SCHEMATIC DIAGRAM

CHASSIS REMOVAL

MODELS A21, A22

1. Remove cabinet back - 4 screws hold it in place.

2. Remove chassis mtg. screw at base of chassis and screw at tuning gang mtg bracket.

3. Pull off volume knob ONLY. (Do not pull captivated tuning knob).

4. From front, unscrew palnut under volume control knob.

5. Unsolder appropriate leads to slide chassis out of tuning knob and cabinet.

MODELS C21, C22, C23

1. Remove cabinet back - 2 screws hold it in place.

2. Pull off volume and tuning knobs.

3. From rear, remove chassis mtg. screw located on volume control mounting bracket.

4. Unsolder appropriate leads to slide chassis from cabinet.

NOTES:
CAPACITORS - UNLESS OTHERWISE SPECIFIED, DECIMAL VALUES IN MF, ALL OTHERS IN MMF.
VOLTAGES - MEASURED FROM POINT INDICATED TO CHASSIS WITH A VTVM. ± 10% NO SIGNAL INPUT
TUNING RANGE - 535KC TO 1620KC (IF - 455KC)
PLATED BOARD WIRING LEGEND
= B+ = AVC = FIL

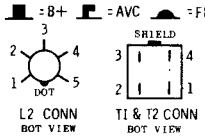

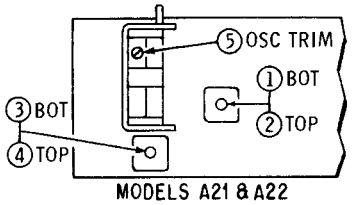

MODELS A21 & A22

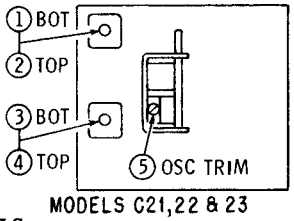

MODELS C21,22 & 23

ALIGNMENT DETAILS

ALIGNMENT

Use an isolation transformer between the power line and the receiver. If not available, connect low side of generator to B- through a .1 mf capacitor. Connect a low range output meter across speaker voice coil and set volume control to maximum. Attenuate generator output to maintain 50 milliwatts on output meter to prevent overloading (50 milliwatts is .64 volts across 8 ohm load).

STEP	GENERATOR CONNECTION	GENERATOR FREQUENCY (400 cycle mod)	GANG SETTING	ADJUST	REMARKS
IF ALIGNMENT					
1.	Grid of conv (pin 7, 12BE6) thru .1 mf & B-	455 Kc	Fully open	1,2,3 & 4	Adjust for maximum.
RF ALIGNMENT					
2.	Grid of conv (pin 7, 12BE6) thru .1 mf & B-	1620 Kc	Fully open	5	Adjust for maximum.

MOTOROLA

Model X34, Chassis HS-1060

(For alignment see data on X35 on the next page)

Chassis Removal

1. Remove tuning knob mounting screw (from front of radio), remove cabinet back and one (1) chassis mounting screw located next to tuning gang.

2. Spread cabinet slightly at sides until chassis is free from its four (4) chassis retainers (part of cabinet). Lift chassis up until it clears the retainers.

3. If necessary, unsolder all chassis connecting leads. If it becomes necessary to remove the earphone jack, unscrew the earphone jack mounting nut (a special tool is available, order Motorola Part No. 66A646211).

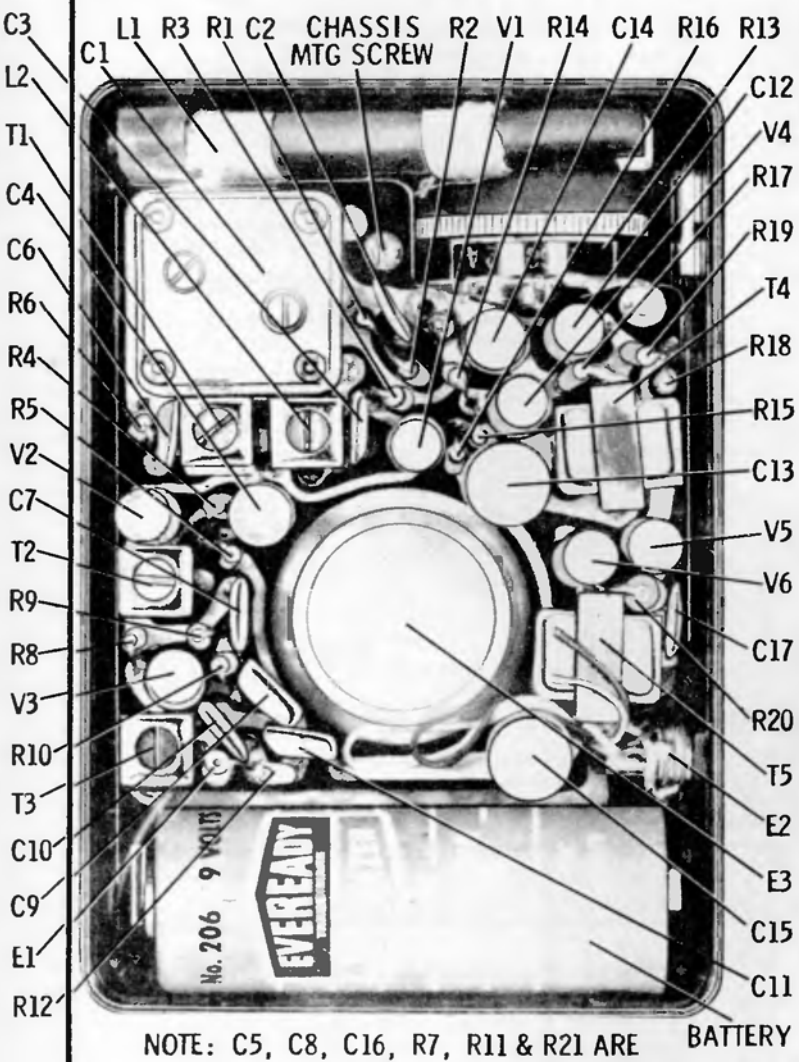

NOTE: C5, C8, C16, R7, R11 & R21 ARE LOCATED ON BOTTOM OF CHASSIS.

MODEL X34 PARTS LOCATION

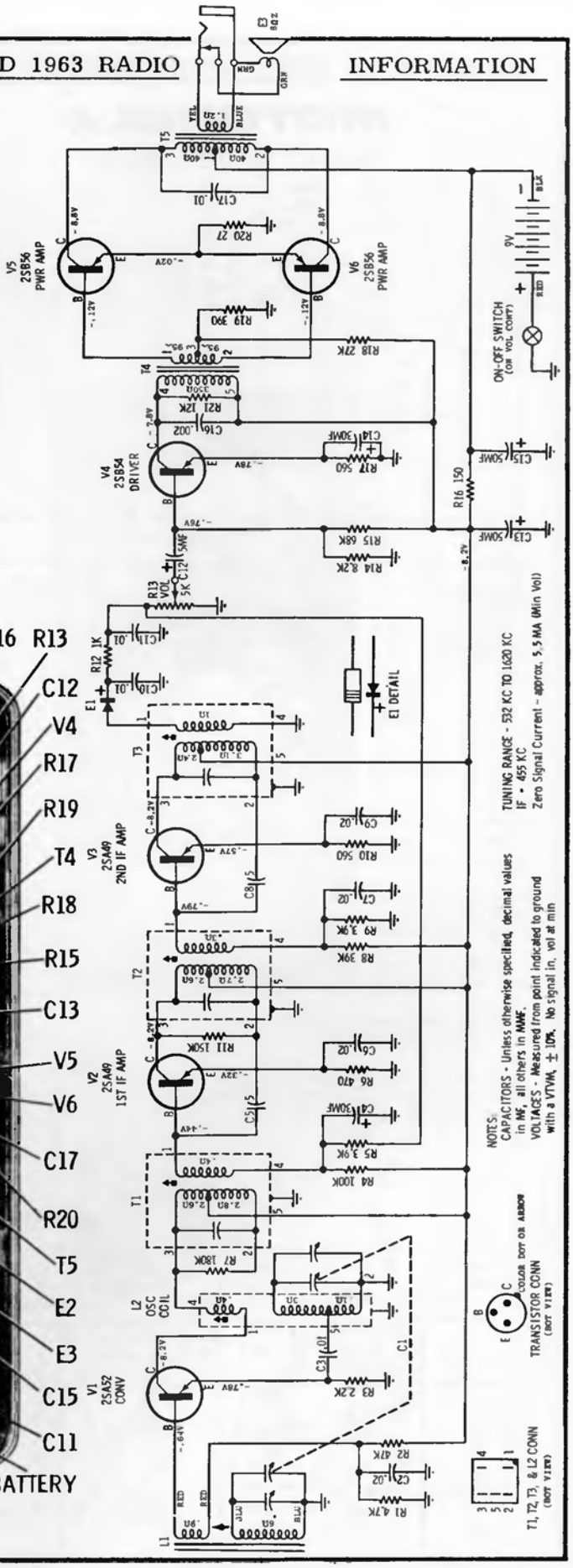

MOTOROLA

Model X35, Chassis HS-1003

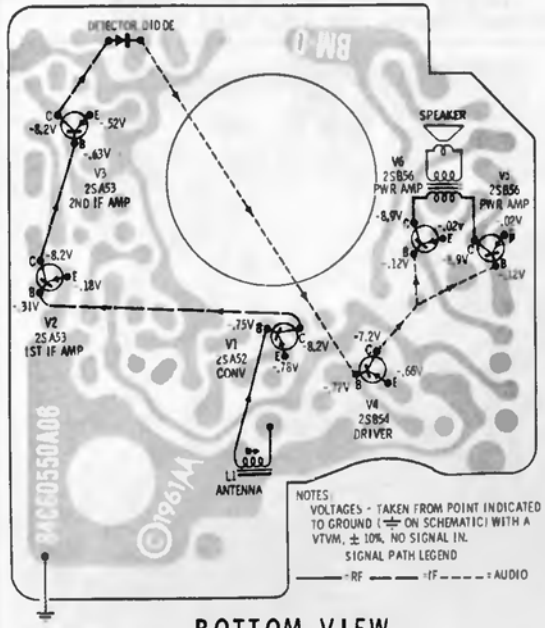

BOTTOM VIEW

SIGNAL PATH FLOW AND VOLTAGE READINGS TAKEN FROM BOTTOM SIDE OF CHASSIS

CAPACITORS - NOTE: All capacitors are ceramic disc type unless otherwise specified.

C-1	19B60499A01	VARIABLE: 2 section ganged
C-2	21K646412	.02 mf 25V
C-3	21B60500A01	.01 mf 25V (USE 21B751992)
C-4	23C60496A02	30 mf 3V electrolytic
C-5	21K647702	6 mmf 25V
C-6	21K646412	.02 mf 25V
C-7	21K646412	.02 mf 25V
C-8	21K645601	3 mmf 25V
C-9	21K646413	.05 mf 25V
C-10	21K646413	.05 mf 25V
C-11	21K646413	.05 mf 25V
C-12	23C60496A08	5 mf 6V electrolytic (USE 23C60496A03)
C-13	23C60496A04	50 mf 10V electrolytic
C-14	23C60496A02	30 mf 3V electrolytic
C-15	23C60496A04	50 mf 10V electrolytic
C-16	21B60500A04	.002 mf 25V (USE 21B646414)
C-17	21B60500A01	.01 mf 25V (USE 21B751992)
C-18	**21K647834	.01 mf 25V

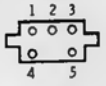

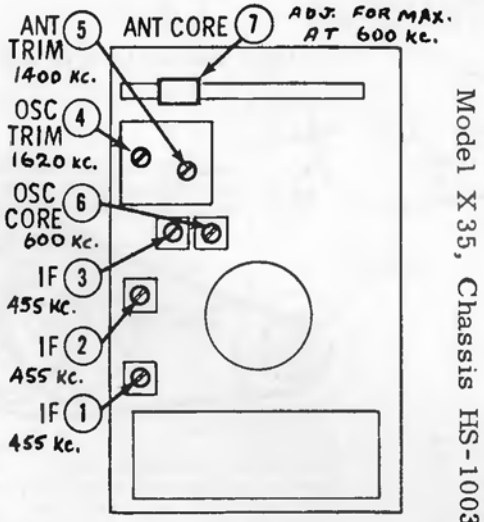

MODELS X34, X35 ALIGNMENT LOCATIONS

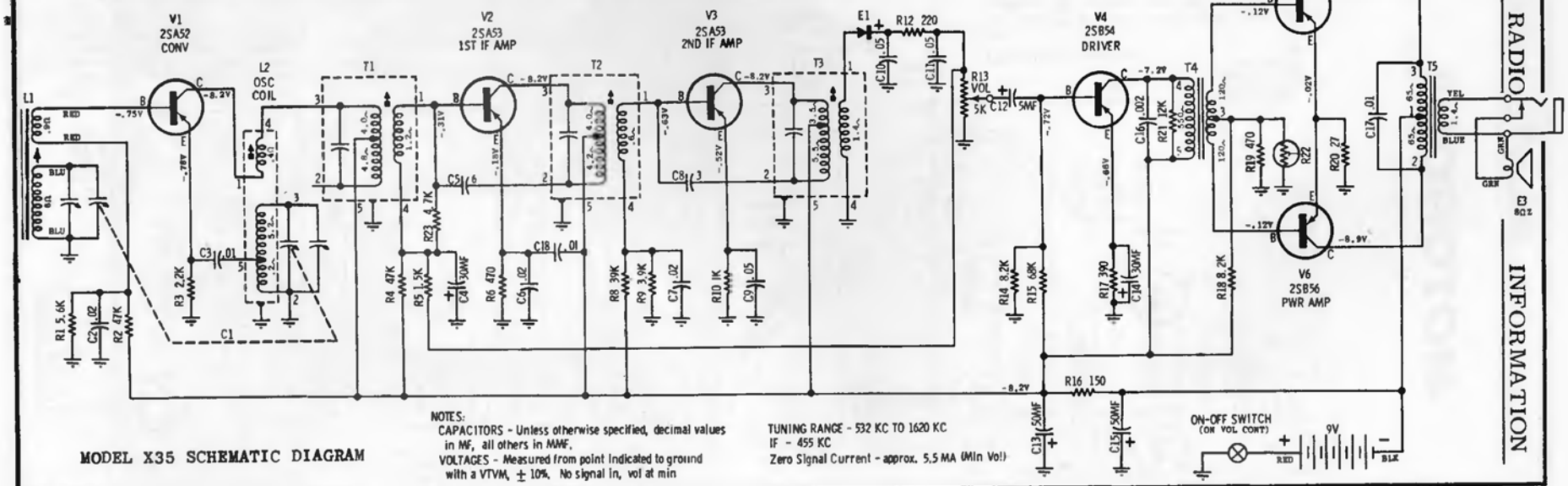

MODEL X35 SCHEMATIC DIAGRAM

NOTES:
CAPACITORS - Unless otherwise specified, decimal values in MF, all others in MMF.
VOLTAGES - Measured from point indicated to ground with a VTVM, ± 10%. No signal in, vol at min

TUNING RANGE - 532 KC TO 1620 KC
IF - 455 KC
Zero Signal Current - approx. 5.5 MA (Min Vol)

MOTOROLA

MODEL X36

Chassis HS-1004

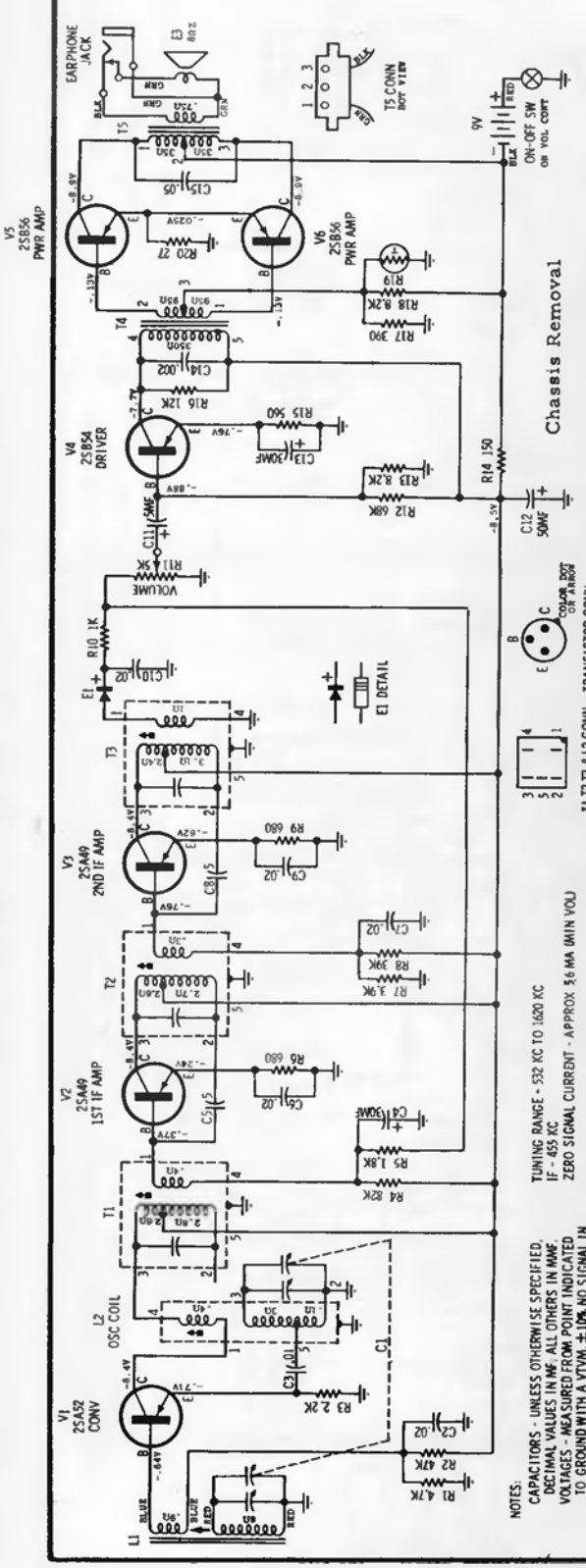

Chassis Removal

1. Insert a coin into the slot on bottom of cabinet and twist in either direction; lift off cabinet back.

2. Remove three (3) chassis mounting screws and lift up chassis.

3. If necessary, unsolder all chassis connecting leads. If it becomes necessary to remove the earphone jack, unscrew the earphone jack mounting nut (a special tool is available - order Motorola Part No. 66A646211).

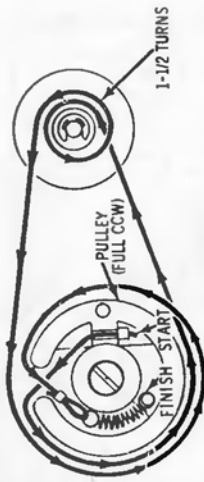

BEFORE STARTING STRINGING, ROTATE GANG SHAFT & PULLEY FULLY COUNTERCLOCKWISE, THEY SHOULD BE IN POSITION AS SHOWN.

MODEL X36 DIAL STRINGING DETAIL

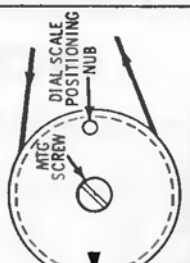

BEFORE INSTALLING DIAL SCALE, REMOVE MTG SCREW BUT HOLD ONTO PULLEY.

MODEL X36 SCHEMATIC DIAGRAM

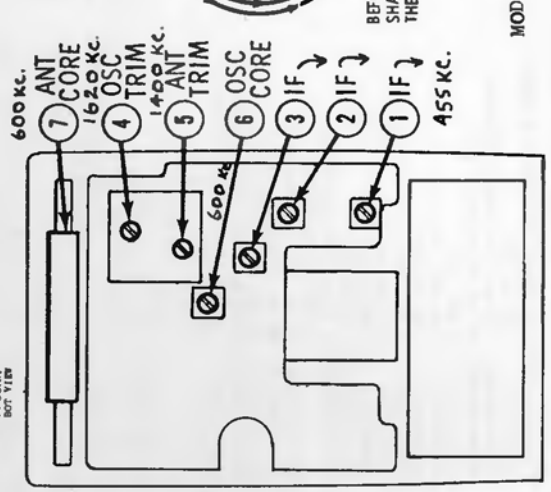

MODEL X36 ALIGNMENT LOCATIONS

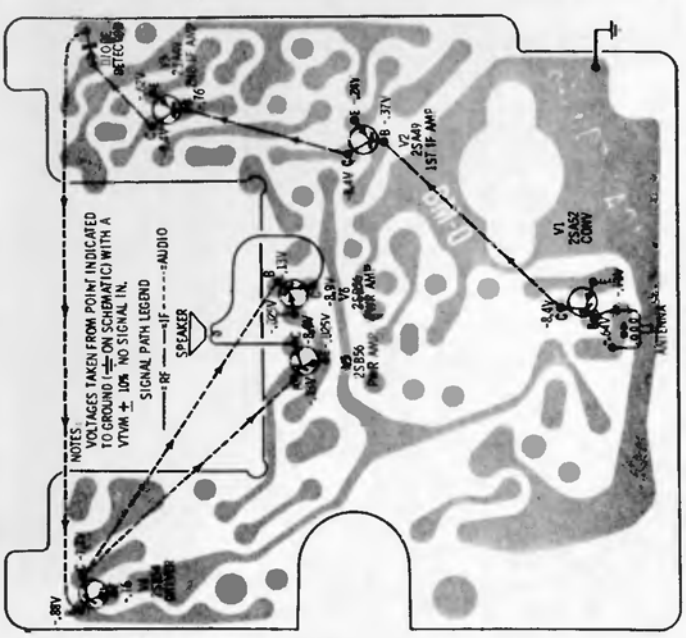

SIGNAL PATH FLOW AND VOLTAGE READINGS TAKEN FROM BOTTOM SIDE OF CHASSIS

MOTOROLA

MODEL X37
Chassis HS-1005

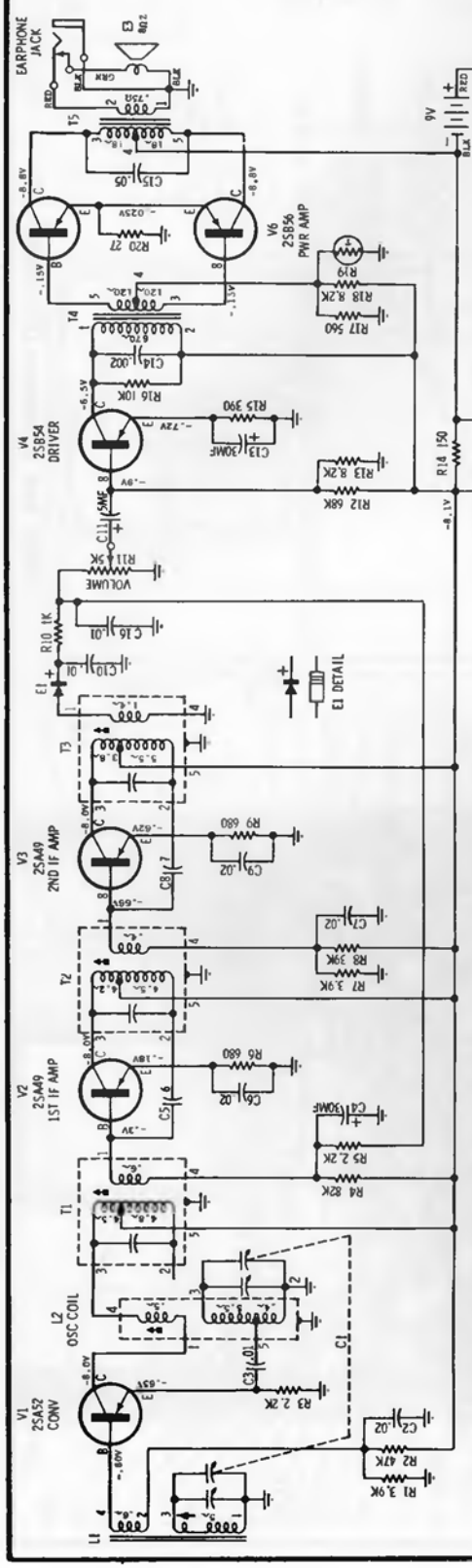

MODEL X37 SCHEMATIC DIAGRAM

NOTES:
CAPACITORS - UNLESS OTHERWISE SPECIFIED, DECIMAL VALUES IN MF, ALL OTHERS IN MMF.
VOLTAGES - MEASURED FROM POINT INDICATED TO GROUND WITH A VTVM, ± 10%, NO SIGNAL IN, VOL AT MIN.
TUNING RANGE - 532 KC TO 1620 KC
IF - 455 KC
ZERO SIGNAL CURRENT - APPROX 5.5 MA (MIN VOL)

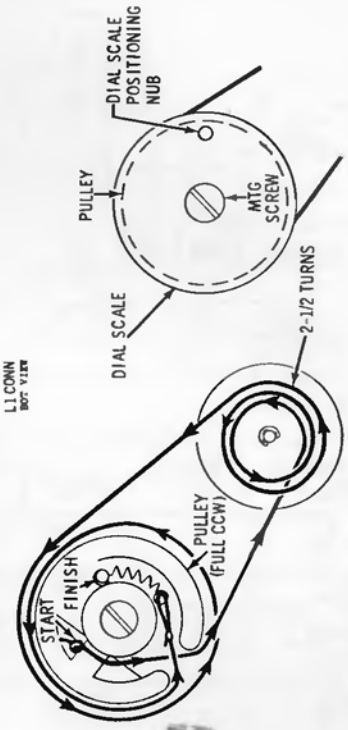

BEFORE STARTING STRINGING, ROTATE GANG SHAFT & PULLEY FULLY COUNTERCLOCKWISE; THEY SHOULD BE IN POSITION AS SHOWN.

MODEL X37 DIAL STRINGING DETAIL

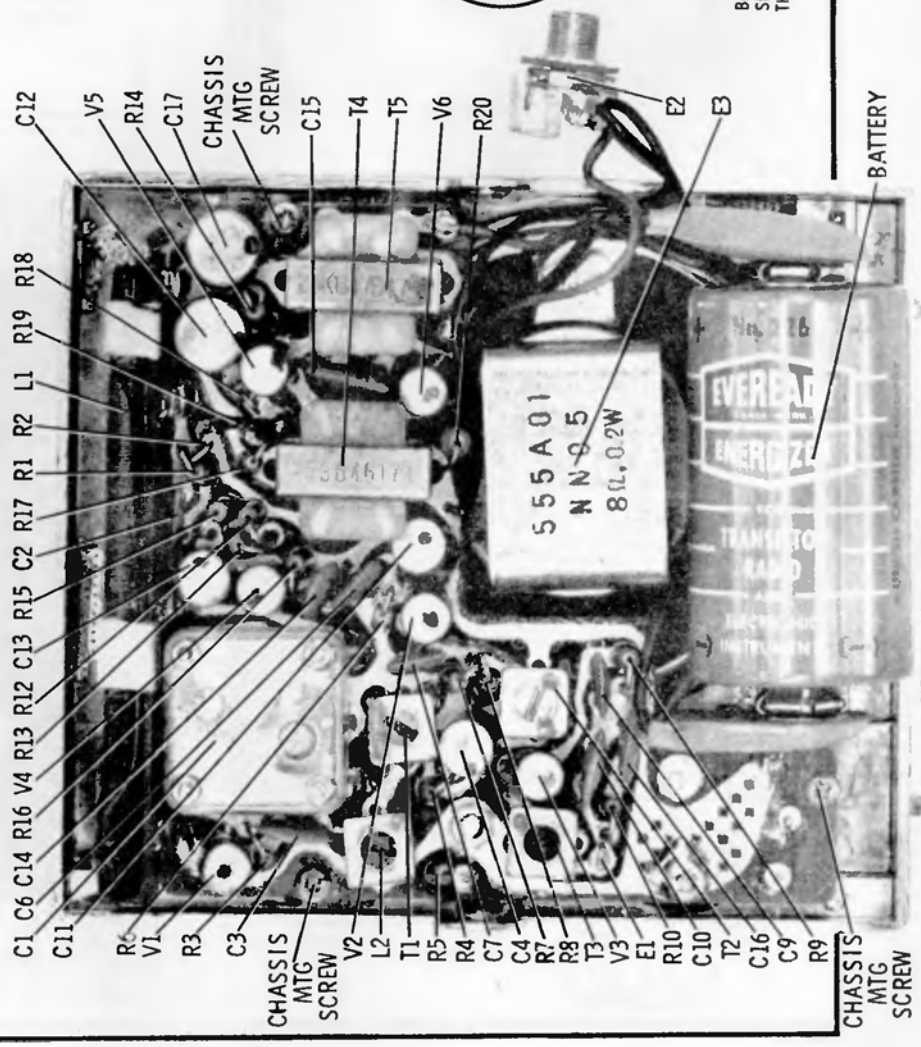

MODEL X37 PARTS LOCATION

MOTOROLA

Model X38
Chassis HS-1006

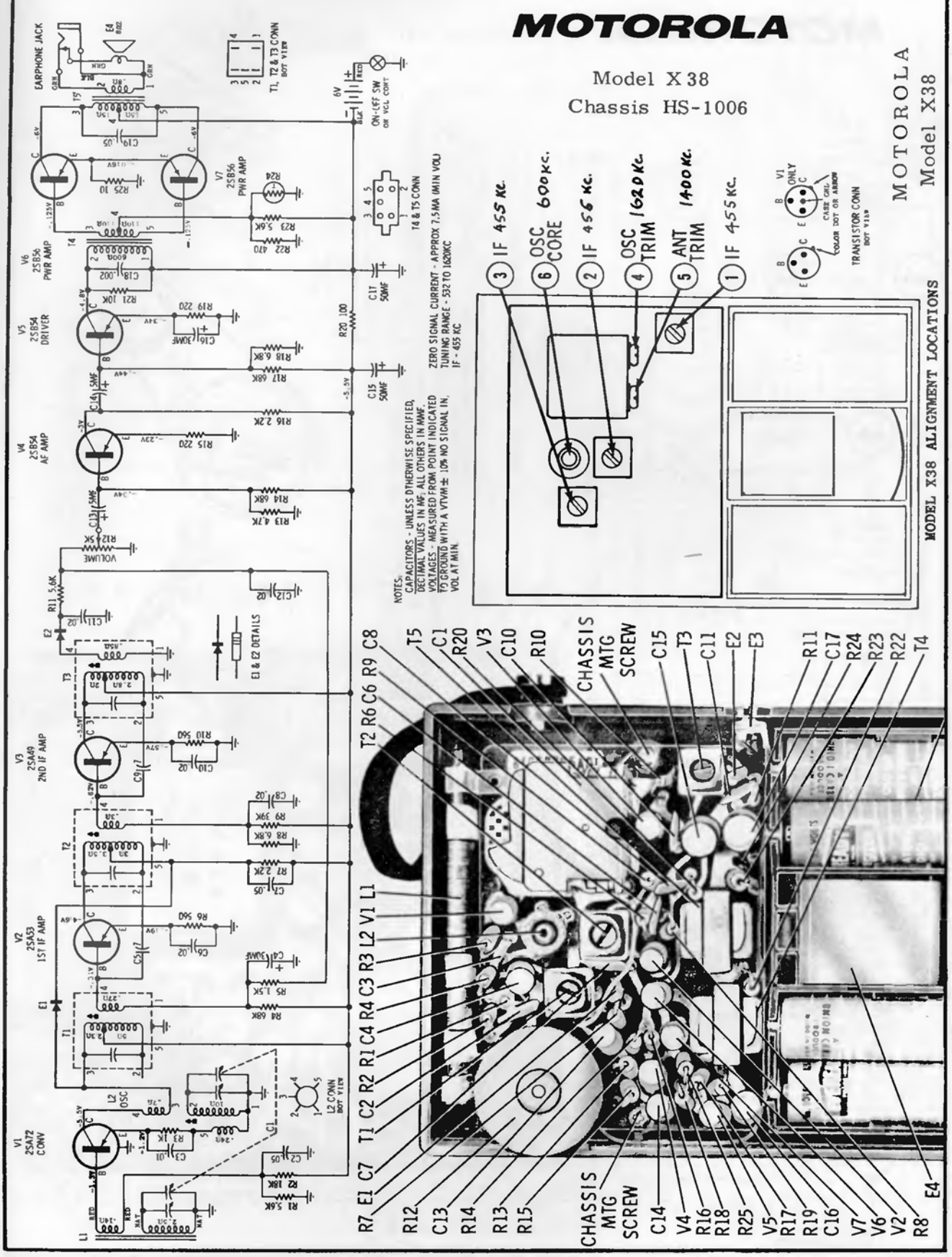

MODEL X38 PARTS LOCATION

MOTOROLA Model X39, Chassis HS-1007

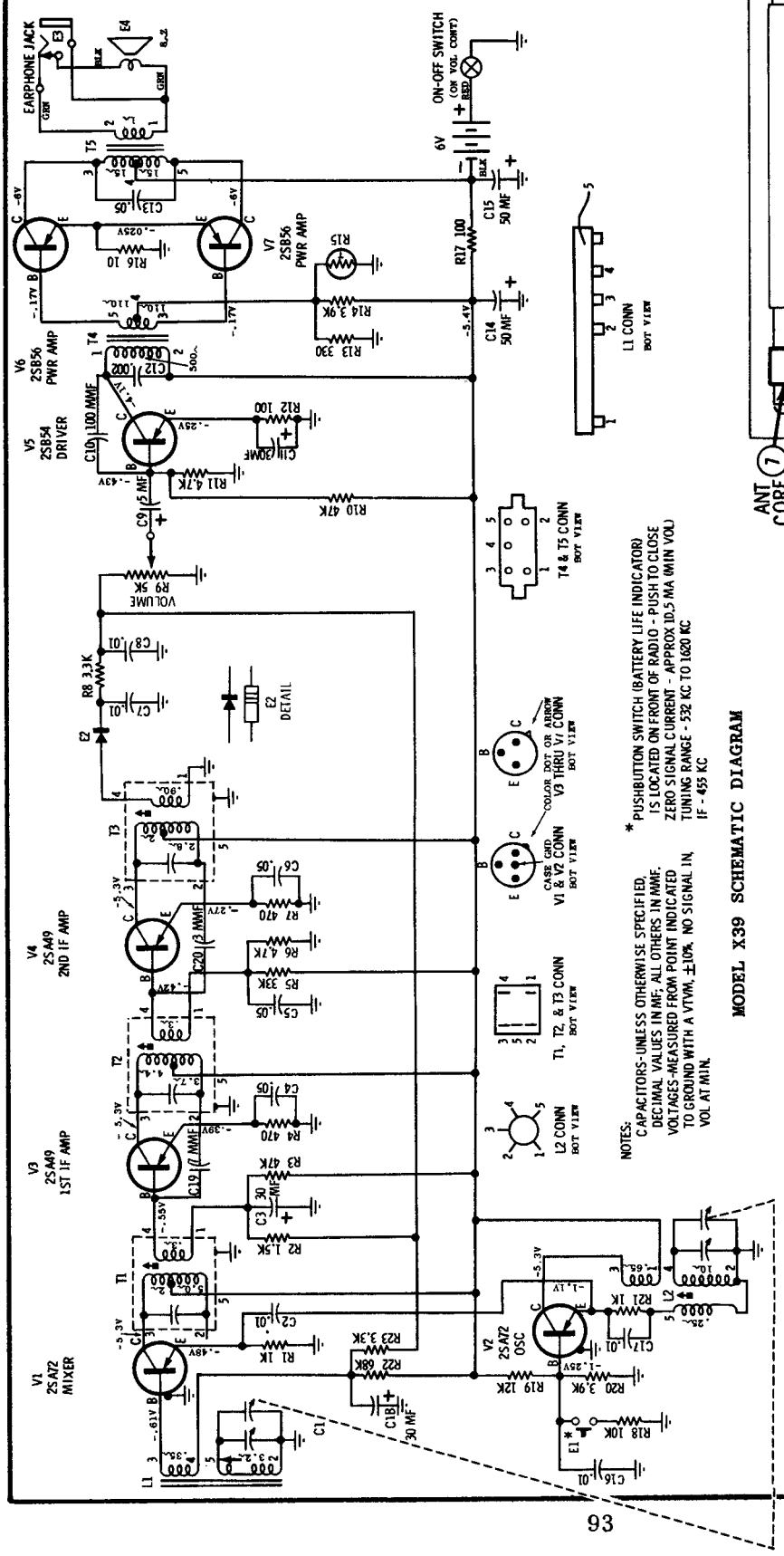

NOTES:
CAPACITORS-UNLESS OTHERWISE SPECIFIED, DECIMAL VALUES IN MF; ALL OTHERS IN MMF.
VOLTAGES-MEASURED FROM POINT INDICATED TO GROUND WITH A VTVM, ±10%. NO SIGNAL IN, VOL AT MIN.

* PUSHBUTTON SWITCH (BATTERY LIFE INDICATOR) IS LOCATED ON FRONT OF RADIO - PUSH TO CLOSE
ZERO SIGNAL CURRENT - APPROX 10.5 MA (MIN VOL)
TUNING RANGE - 532 KC TO 1620 KC
IF - 455 KC

MODEL X39 SCHEMATIC DIAGRAM

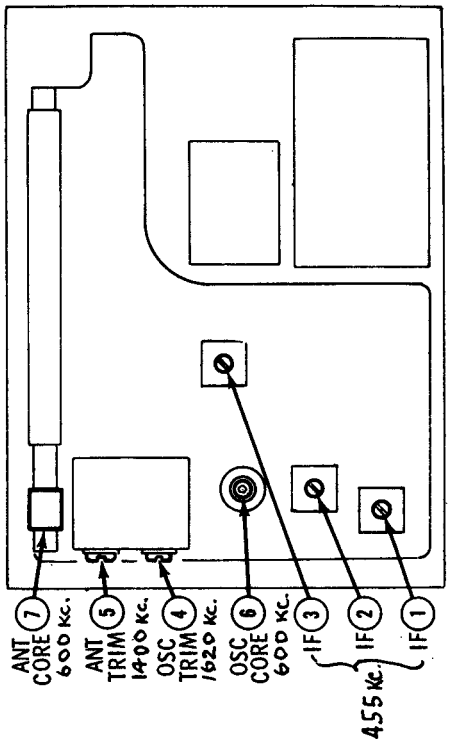

MODEL X39 ALIGNMENT LOCATIONS

Chassis Removal

1. From rear of cabinet, unscrew the earphone jack mounting nut.
2. Lift up carrying handle and remove two (2) screws from sides of cabinet.
3. Lift out escutcheon and chassis as an assembly from cabinet rear.
4. If it becomes necessary to remove chassis from escutcheon, first remove the two control knobs and three chassis mounting screws, then unsolder all chassis connecting leads (to speaker, etc.).

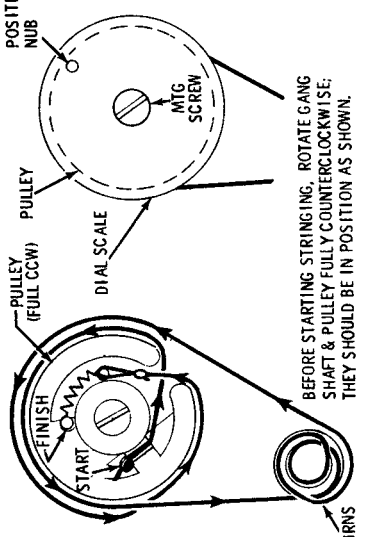

MODEL X39 DIAL STRINGING DETAIL

MOTOROLA Model X40

Chassis HS-1008

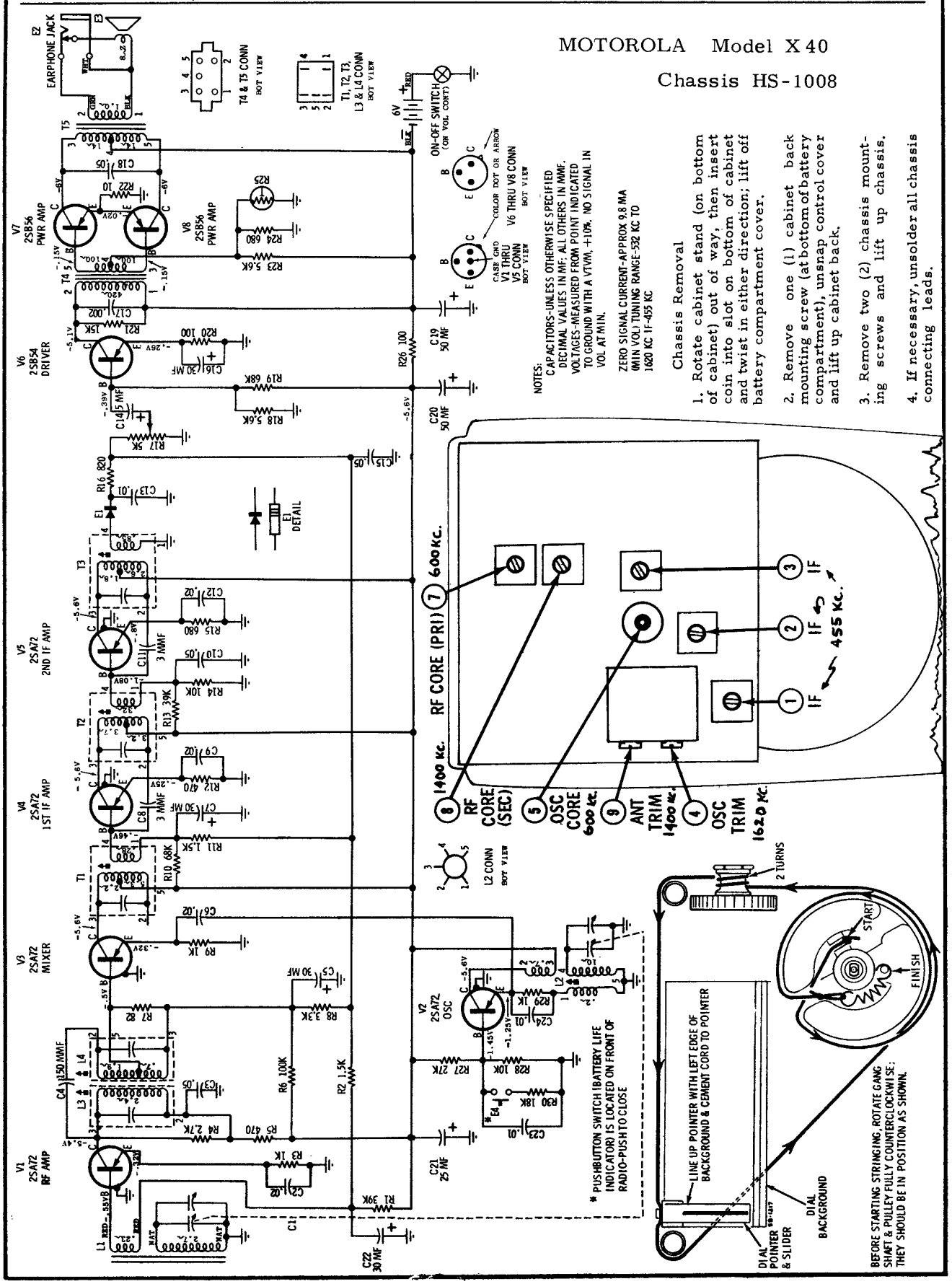

NOTES:
CAPACITORS-UNLESS OTHERWISE SPECIFIED DECIMAL VALUES IN MF; ALL OTHERS IN MMF.
VOLTAGES-MEASURED FROM POINT INDICATED TO GROUND WITH A VTVM, +10%. NO SIGNAL IN VOL AT MIN.

ZERO SIGNAL CURRENT-APPROX 9.8 MA
(MIN VOL) TUNING RANGE-532 KC TO 1620 KC IF-455 KC

Chassis Removal

1. Rotate cabinet stand (on bottom of cabinet) out of way, then insert coin into slot on bottom of cabinet and twist in either direction; lift off battery compartment cover.
2. Remove one (1) cabinet back mounting screw (at bottom of battery compartment), unsnap control cover and lift up cabinet back.
3. Remove two (2) chassis mounting screws and lift up chassis.
4. If necessary, unsolder all chassis connecting leads.

MODEL X40 ALIGNMENT LOCATIONS

MODEL X40 DIAL STRINGING DETAIL

MOTOROLA

Models X41, X41-1

Chassis HS-1009

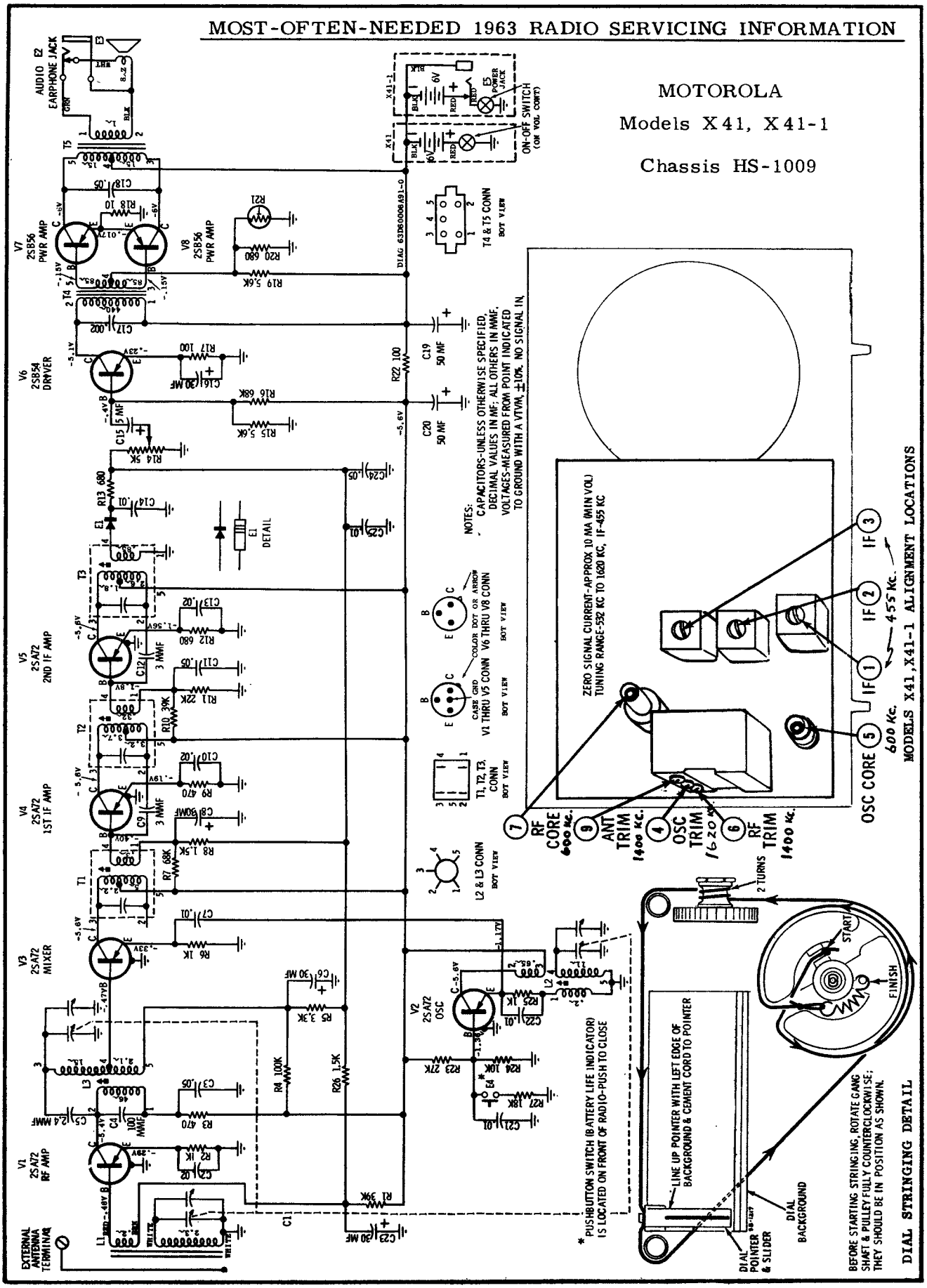

MOTOROLA Tuner HK47, Chassis HS-931

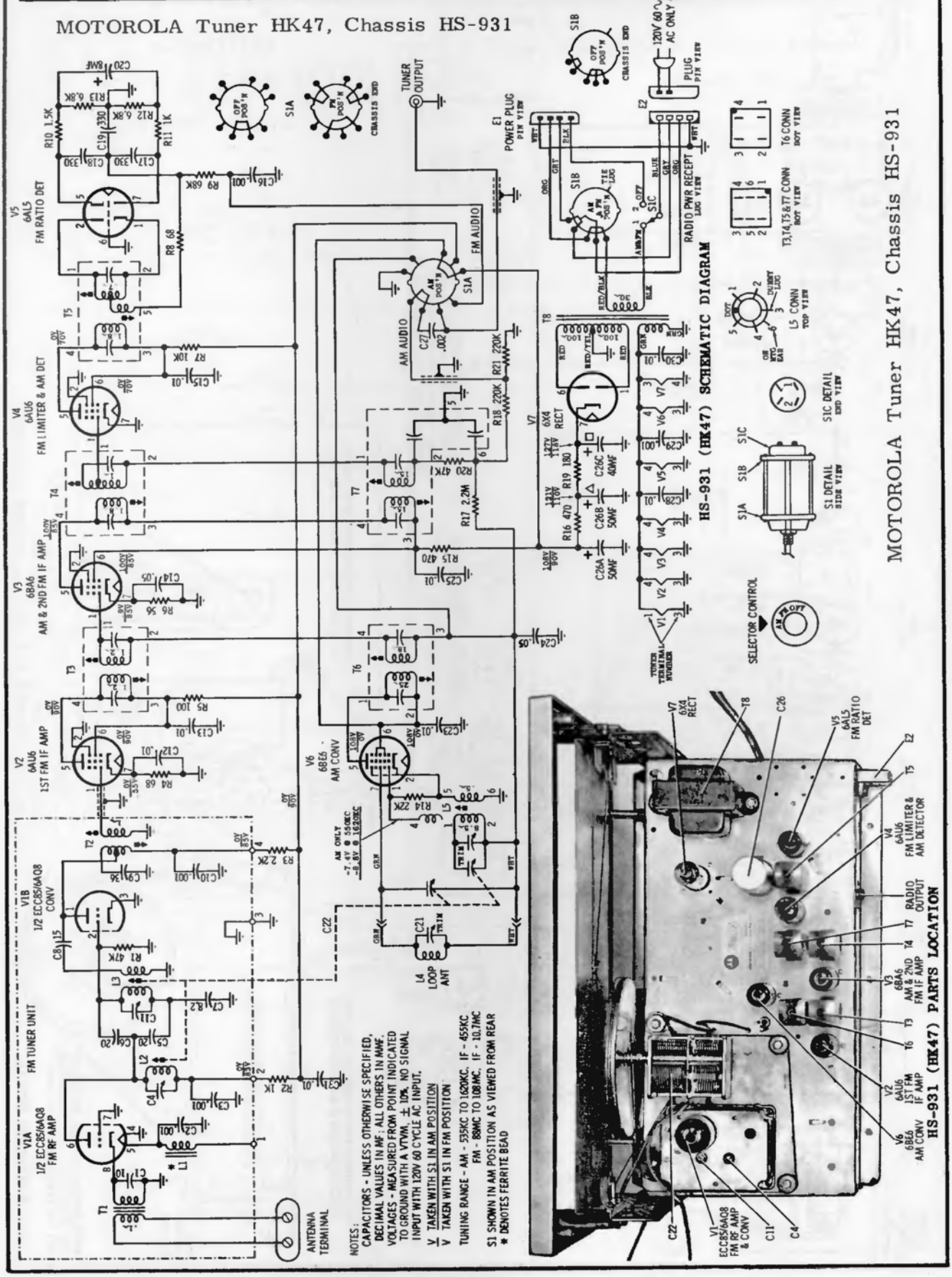

HS-931 (HK47) SCHEMATIC DIAGRAM

MOTOROLA Tuner HK47, Chassis HS-931

HS-931 (HK47) PARTS LOCATION

HS-997 (HK45-3) SCHEMATIC DIAGRAM

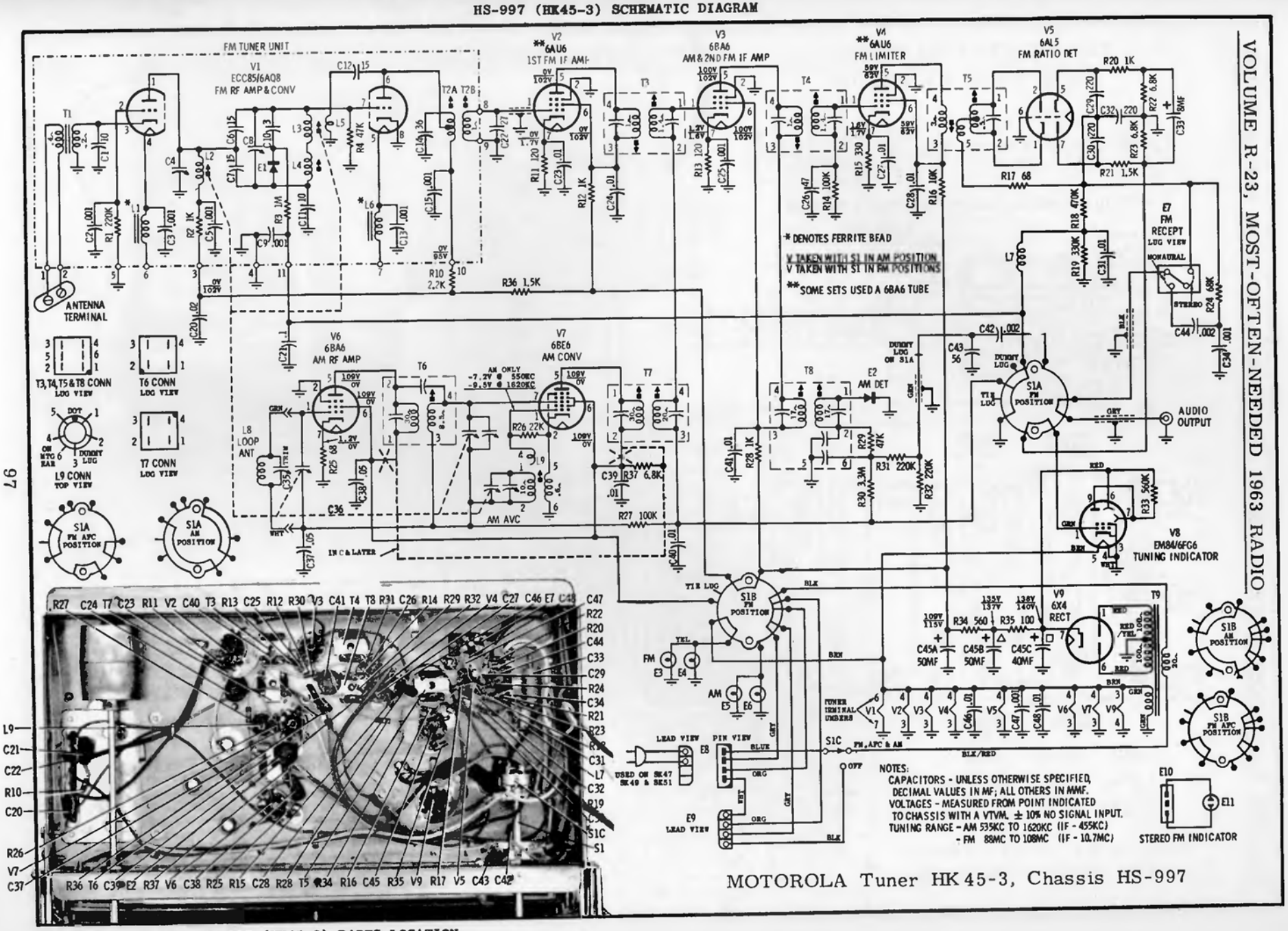

HS-997 (HK45-3) PARTS LOCATION

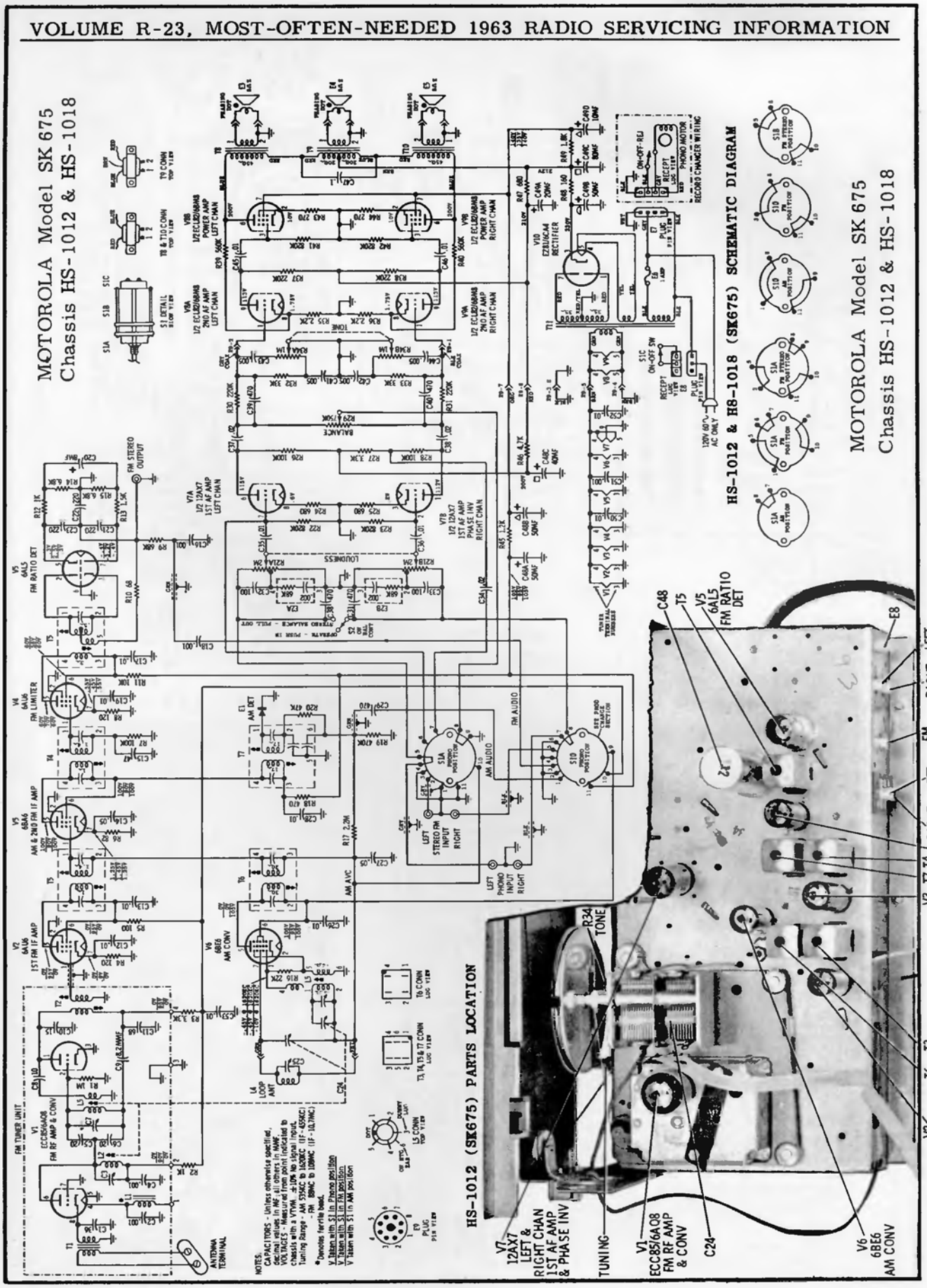
MOTOROLA Model SK 675
Chassis HS-1012 & HS-1018
HS-1012 & HS-1018 (SK675) SCHEMATIC DIAGRAM
HS-1012 (SK675) PARTS LOCATION
NOTES:
CAPACITORS - Unless otherwise specified, decimal values in MF, all others in MMF.
VOLTAGES - Measured from point indicated to chassis with a VTVM. ±10% No signal input.
Tuning Range - AM 535KC to 1620KC (IF-455KC)
- FM 88MC to 108MC (IF-10.7MC)
*Denotes ferrite bead.
V' taken with S1 in Phono position
V' taken with S1 in FM position
V' taken with S1 in AM position
FM TUNER UNIT
ANTENNA TERMINAL
FM STEREO OUTPUT
LOUDNESS
BALANCE
TONE
FM AUDIO
AM AUDIO
AM AVC
LEFT STEREO FM INPUT RIGHT
LEFT PHONO INPUT RIGHT
RECORD CHANGER WIRING
120V 60~ AC ONLY
C48
T5
V5 6AL5 FM RATIO DET
E8
LEFT RIGHT STEREO FM INPUTS
FM STEREO OUTPUT
LEFT RIGHT PHONO INPUTS
V3 T7 T4 6AB6 AM & 2ND FM IF AMP
T6 T3
V2 6AU6 1ST FM IF AMP
R34 TONE
V7 12AX7 LEFT & RIGHT CHAN 1ST AF AMP & PHASE INV
TUNING
V1 ECC85/6AQ8 FM RF AMP & CONV
C24
V6 6BE6 AM CONV

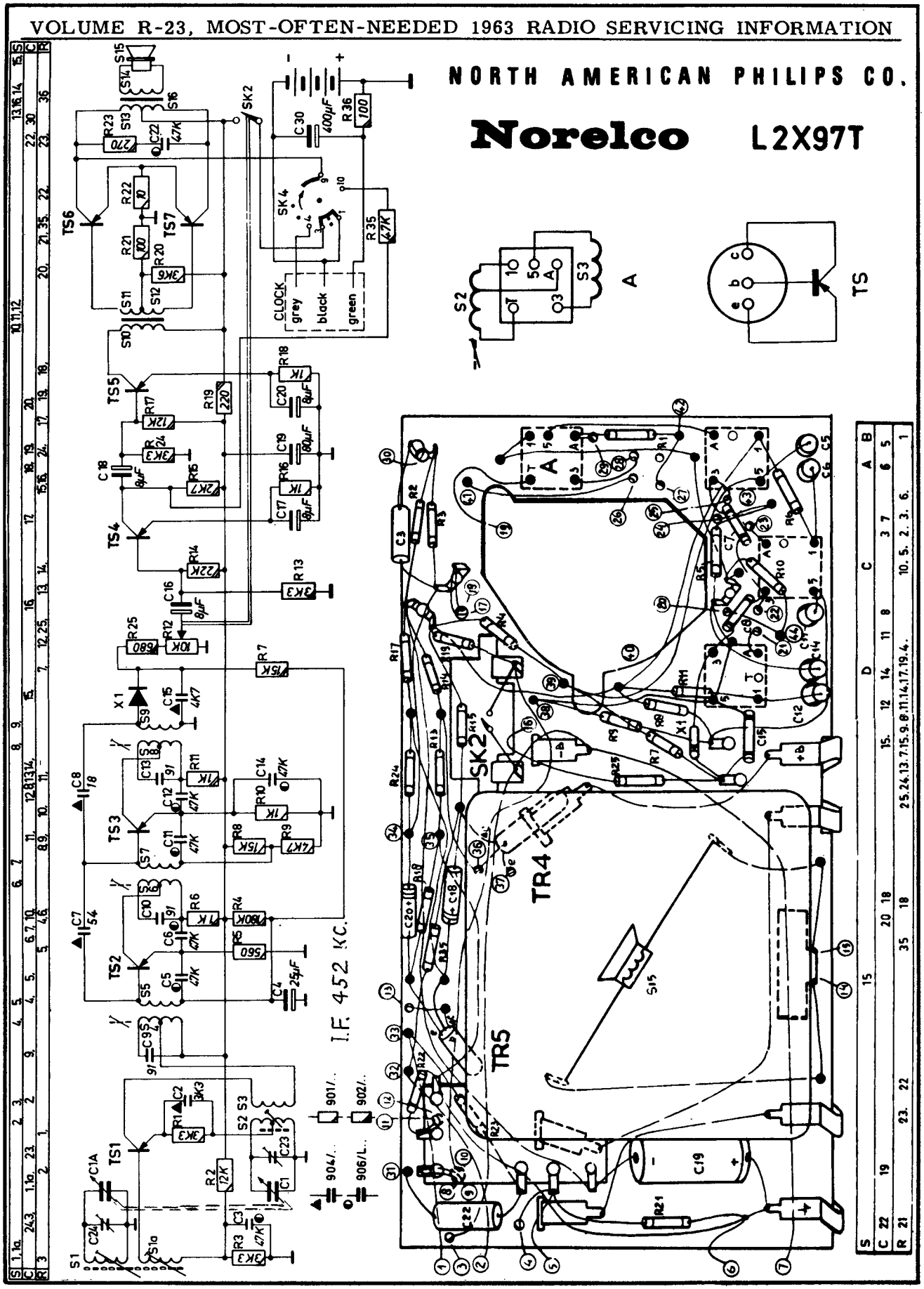
NORTH AMERICAN PHILIPS CO.
Norelco
L2X97T
CLOCK
grey
black
green
I.F. 452 KC.
TS1
TS2
TS3
TS4
TS5
TS6
TS7
TR4
TR5
SK2
SK4
S1
S2
S3
A
TS

Packard Bell

TABLE MODEL RADIO 5R9
CLOCK RADIO MODEL 5RC10

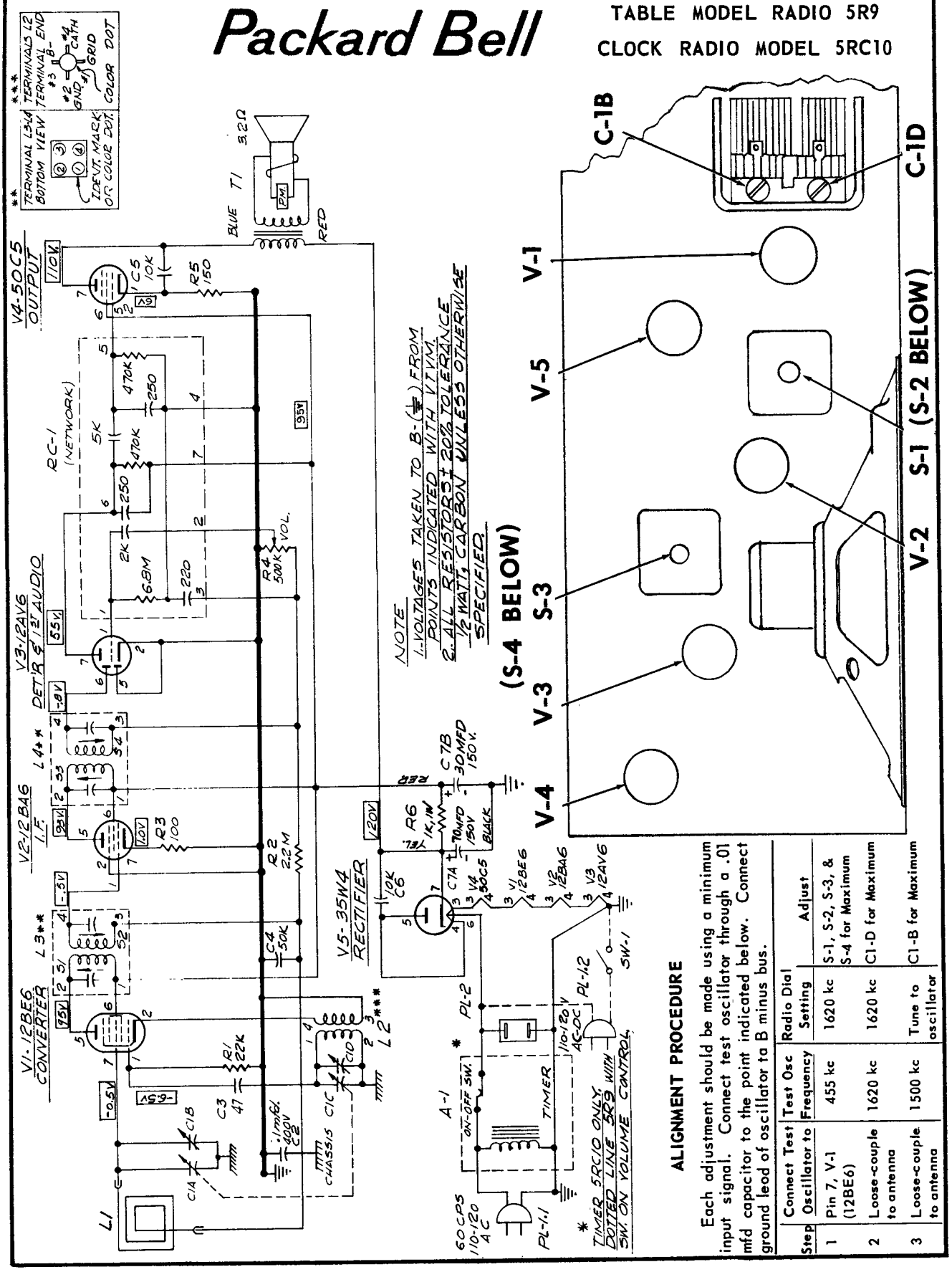

ALIGNMENT PROCEDURE

Each adjustment should be made using a minimum input signal. Connect test oscillator through a .01 mfd capacitor to the point indicated below. Connect ground lead of oscillator to B minus bus.

Step	Connect Test Oscillator to	Test Osc Frequency	Radio Dial Setting	Adjust
1	Pin 7, V-1 (12BE6)	455 kc	1620 kc	S-1, S-2, S-3, & S-4 for Maximum
2	Loose-couple to antenna	1620 kc	1620 kc	C1-D for Maximum
3	Loose-couple to antenna	1500 kc	Tune to oscillator	C1-B for Maximum

PHILCO

TRANSISTOR PORTABLE MODEL T-63 CODE 124

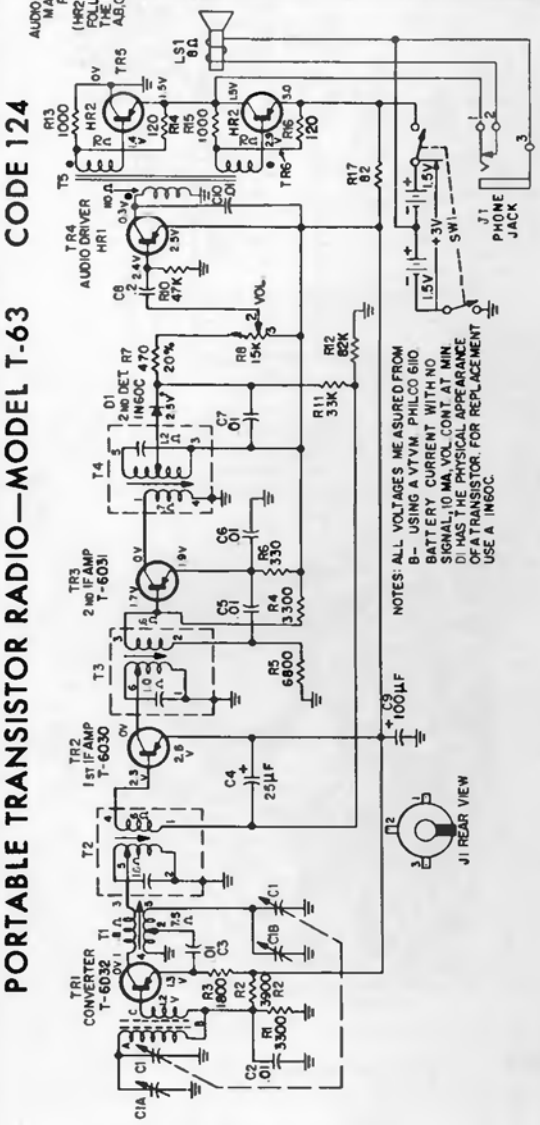

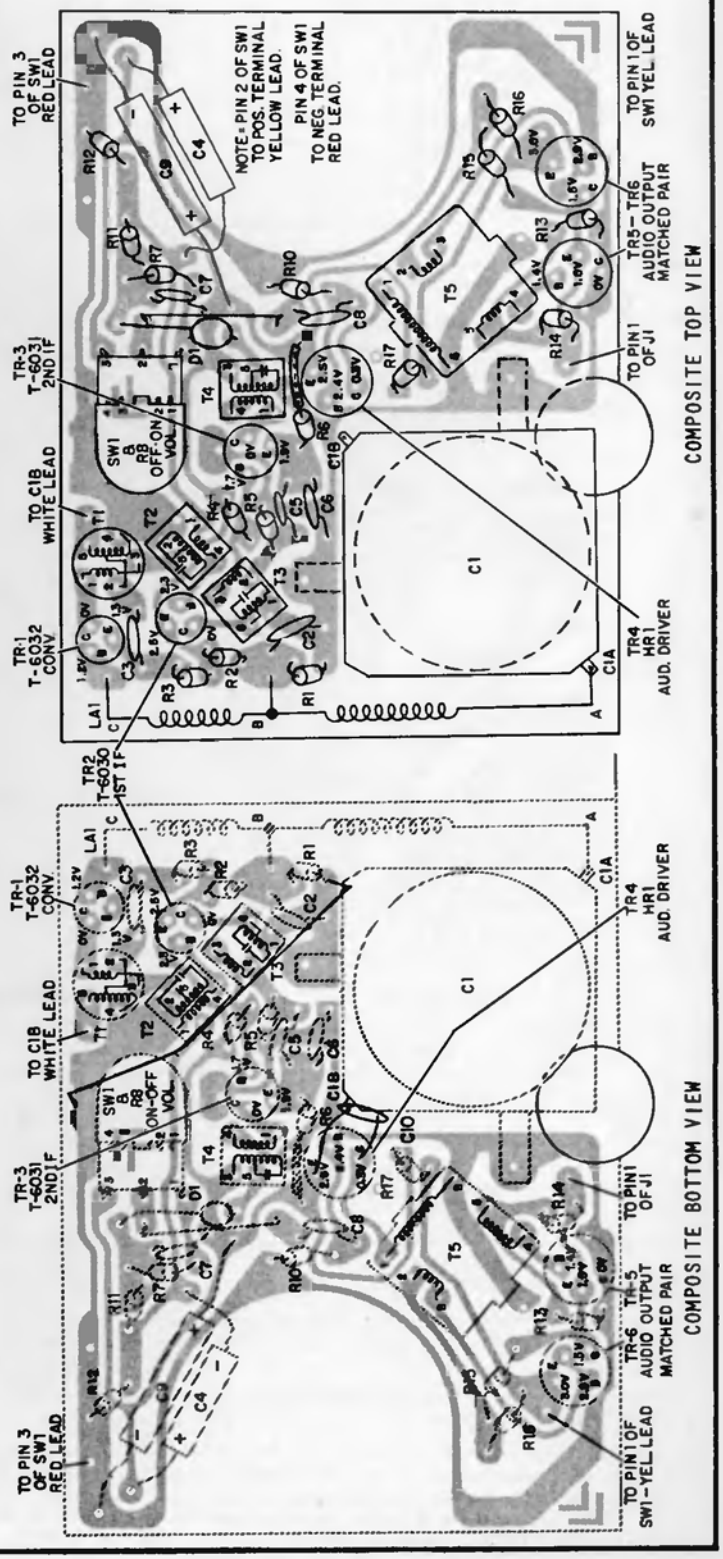

SERVICE NOTES

When signal tracing, inject signal at transistor collector and limit input to keep signal across speaker below .6 volt.

Normally; the transistors should be the last item suspected. If C9 opens serious audio oscillation will result.

FREQUENCY COVERAGE—535 to 1620 KC.
INTERMEDIATE FREQUENCY—455 KC.

Note: Panel Removal

Before panel can be removed from cabinet, a screw located next to the 2nd I-F transformer must be removed. Then depress clips on each side of cabinet. Speaker will remain in cabinet.

PHILCO

TRANSISTOR PORTABLE
MODEL T-64 CODE 124

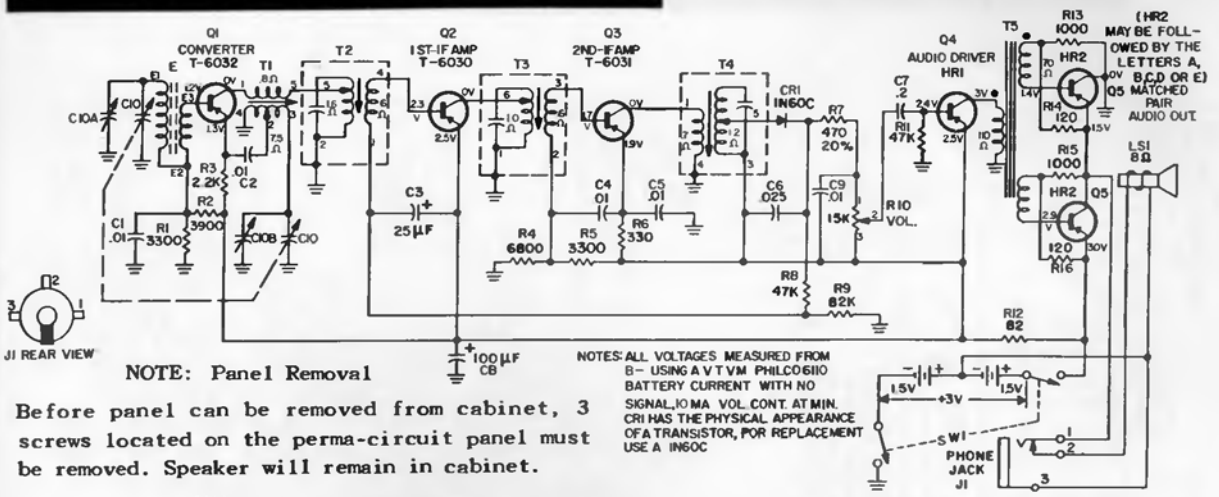

NOTES: ALL VOLTAGES MEASURED FROM B- USING A V T V M PHILCO 6110 BATTERY CURRENT WITH NO SIGNAL, 10 MA VOL. CONT. AT MIN. CR1 HAS THE PHYSICAL APPEARANCE OF A TRANSISTOR, FOR REPLACEMENT USE A 1N60C

NOTE: Panel Removal

Before panel can be removed from cabinet, 3 screws located on the perma-circuit panel must be removed. Speaker will remain in cabinet.

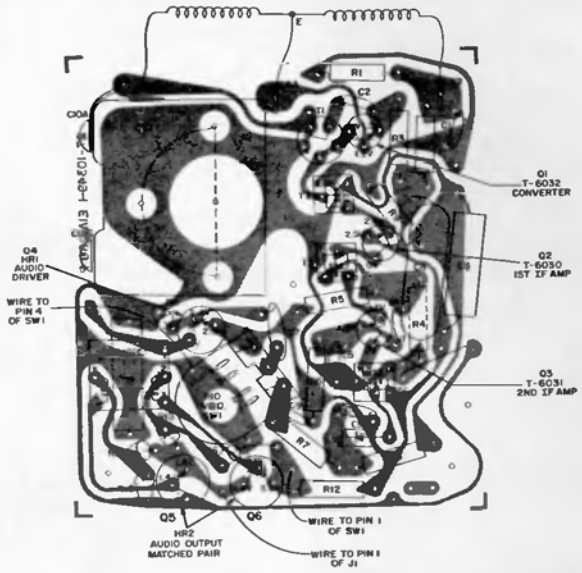

Composite Top View

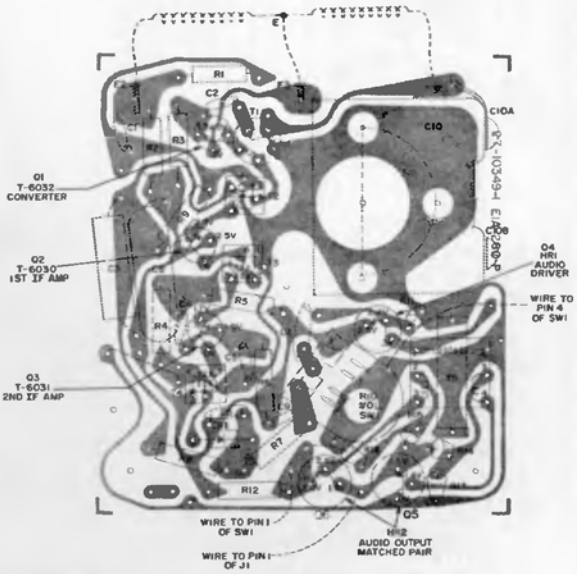

Composite Bottom View

ALIGNMENT PROCEDURE

Step	Signal Generator		Radio		
	Connection to Radio	Dial Setting	Dial Setting	Special Instructions	Adjust
1	Connect signal generator through a .1 µf condenser to ant. section of gang.	455 kc	Tuning gang fully open.	Adjust for maximum output in order given.	T4—3rd IF T3—2nd IF T2—1st IF
2	Use radiating loop. (See NOTE 1 below)	600 kc	600 kc	Adjust for maximum output. Rock tuning gang while making this adjustment.	T1—osc. core
3	Same as Step 2.	1620 kc	1620 kc (Tuning gang fully open)	Adjust for maximum output.	C10B—osc. trimmer.
4	Same as Step 2.	1400 kc	1400 kc	Adjust for maximum output.	C10A-antenna trimmer.
5	Repeat Steps 2, 3, and 4 until no further improvement is obtained. Always stop on Step 4.				

NOTE: Use a 6 to 8 turn, 6-inch diameter loop made up of insulated wire. Connect to generator terminals, and place about one foot from radio loop.

PHILCO

TRANSITOR PORTABLE MODEL T-89

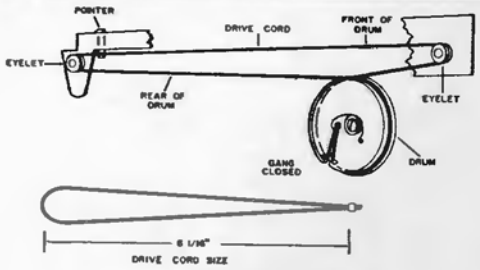

DIAL CORD ARRANGEMENT

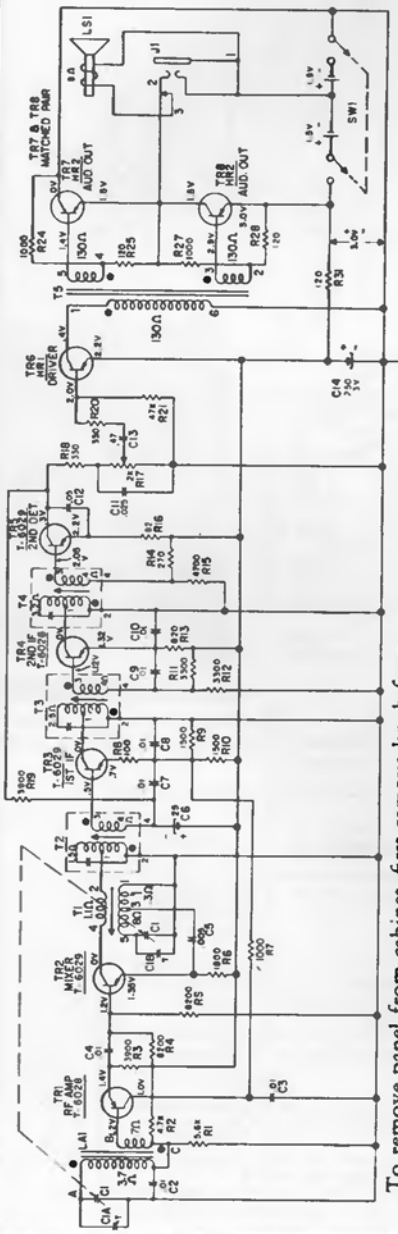

Model T-89, Code 124

NOTE ALL RESISTOR VALUES EXPRESSED IN OHMS AND ALL CAPACITOR VALUES EXPRESSED IN MICROFARADS UNLESS OTHERWISE NOTED.

WITH NO SIGNAL, VOL. CNTROL AT MINIMUM, CURRENT=11 MA

VOLTAGES READ UNDER NO SIGNAL CONDITIONS, VOLUME CONTROL AT MINIMUM, WITH A VTVM PHILCO MODEL 700!

To remove panel from cabinet, first remove knob from front of cabinet. Next remove the screw mounted through the flange of the tuning gang (C1) (graph location D3) which holds the panel to the front of the cabinet. Depress the bottom of the cabinet so that the panel clears the teeth at bottom of cabinet. Lift panel up and out. The speaker will remain in the cabinet.

INTERMEDIATE FREQUENCY—455 KC.

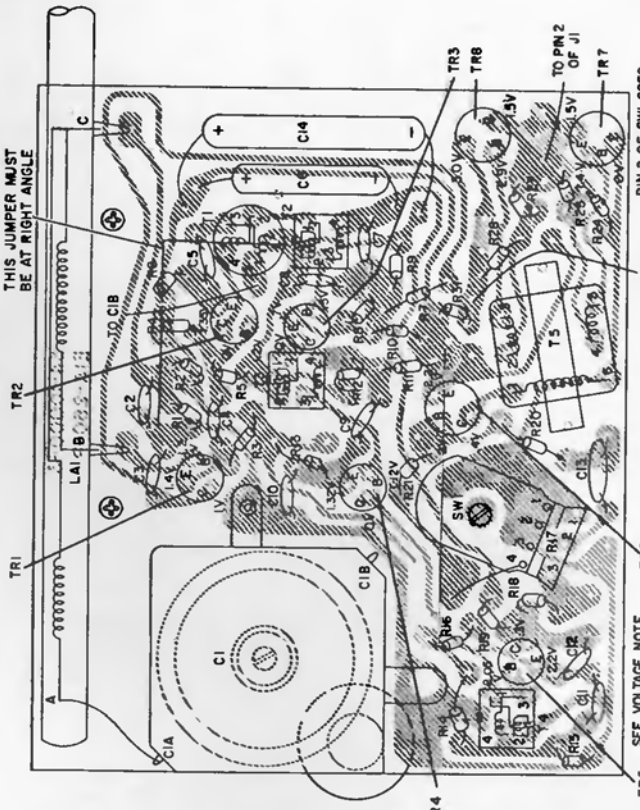

COMPOSITE TOP VIEW

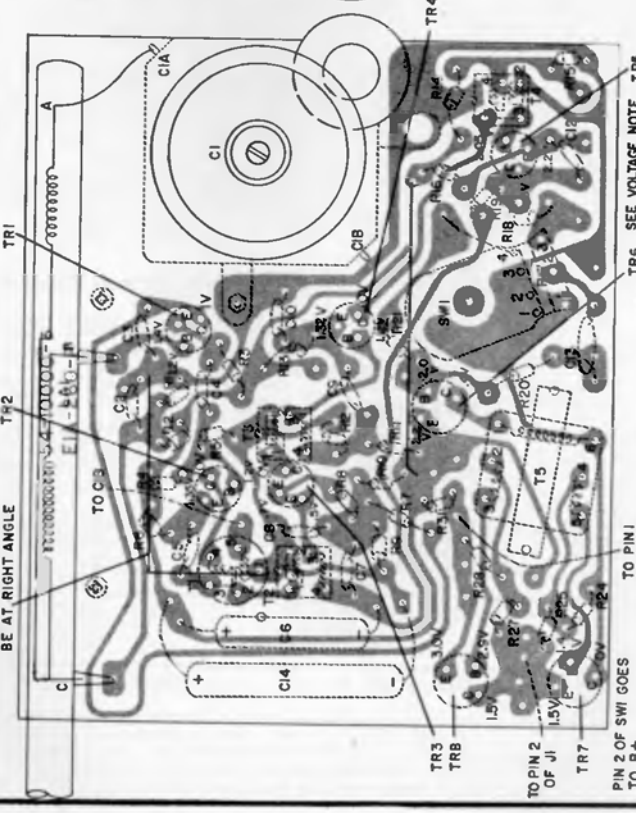

COMPOSITE BOTTOM VIEW

PHILCO

TRANSISTOR PORTABLE MODEL T—702 CODE 124

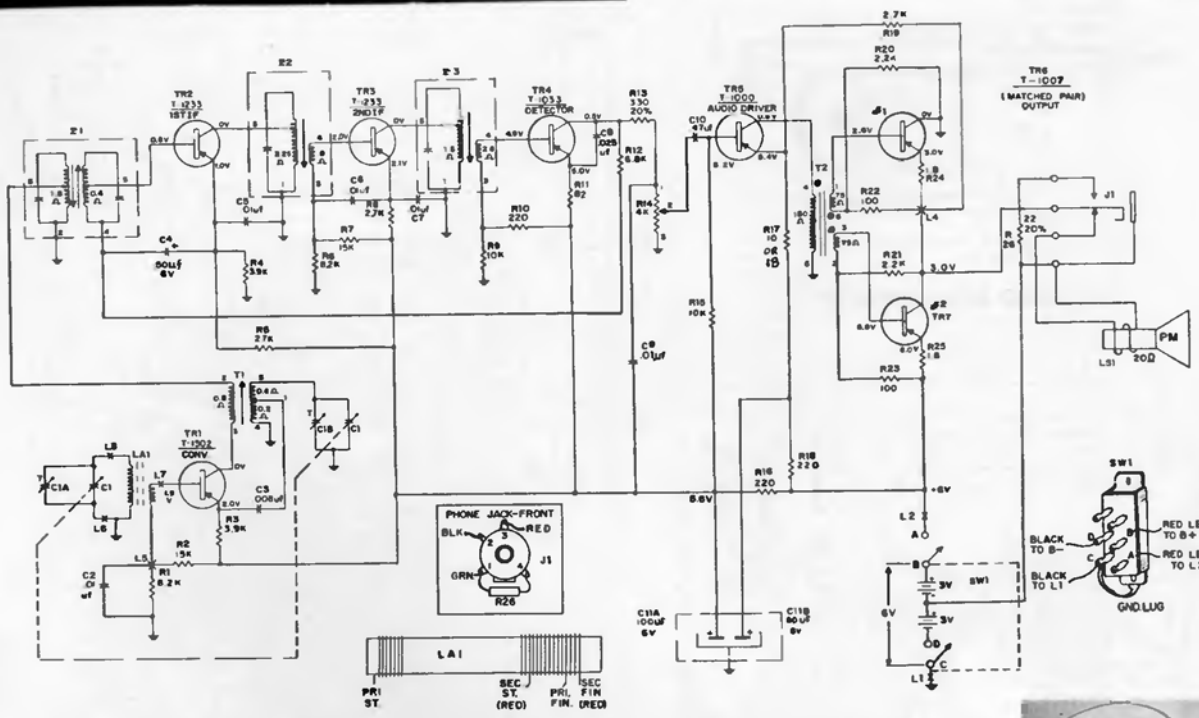

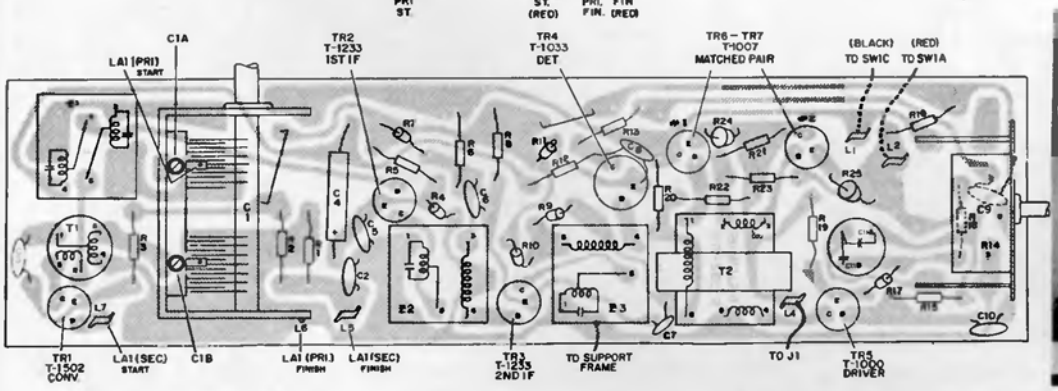

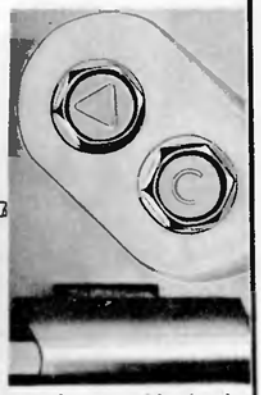

Sheet metal screws with triangles marked on their heads are removed during disassembly.

Top Composite View of Permo-Circuit Panel

ALIGNMENT PROCEDURE

STEP	SIGNAL GENERATOR: CONNECTION TO RADIO	SIGNAL GENERATOR: DIAL SETTING	RADIO: DIAL SETTING	RADIO: SPECIAL INSTRUCTIONS	ADJUST
1	Connect signal generator through a .1-uf. condenser to ant. section of gang.	455 kc.	Tuning gang fully open.	Adjust for maximum output in order given.	Z3—3rd i-f Z2—2nd i-f Z1—1st i-f
2	Use radiating loop. (See NOTE 1 below)	600 kc.	600 kc.	Adjust for maximum output. Rock tuning gang while making this adjustment.	T1—osc. core
3	Same as step 2.	1620 kc.	1620 kc. (Tuning gang fully open)	Adjust for maximum output.	C1B—osc. trimmer
4	Same as step 2.	1400 kc.	1400 kc.	Adjust for maximum output.	C1A—antenna trimmer
5	Repeat steps 2, 3 and 4 until no further improvement is obtained. Always stop on step 4.				

NOTE 1. Use a 6-to-8-turn, 6-inch-diameter loop made up of insulated wire. Connect to generator terminals, and place about one foot from radio loop.

PHILCO

MODEL T—804

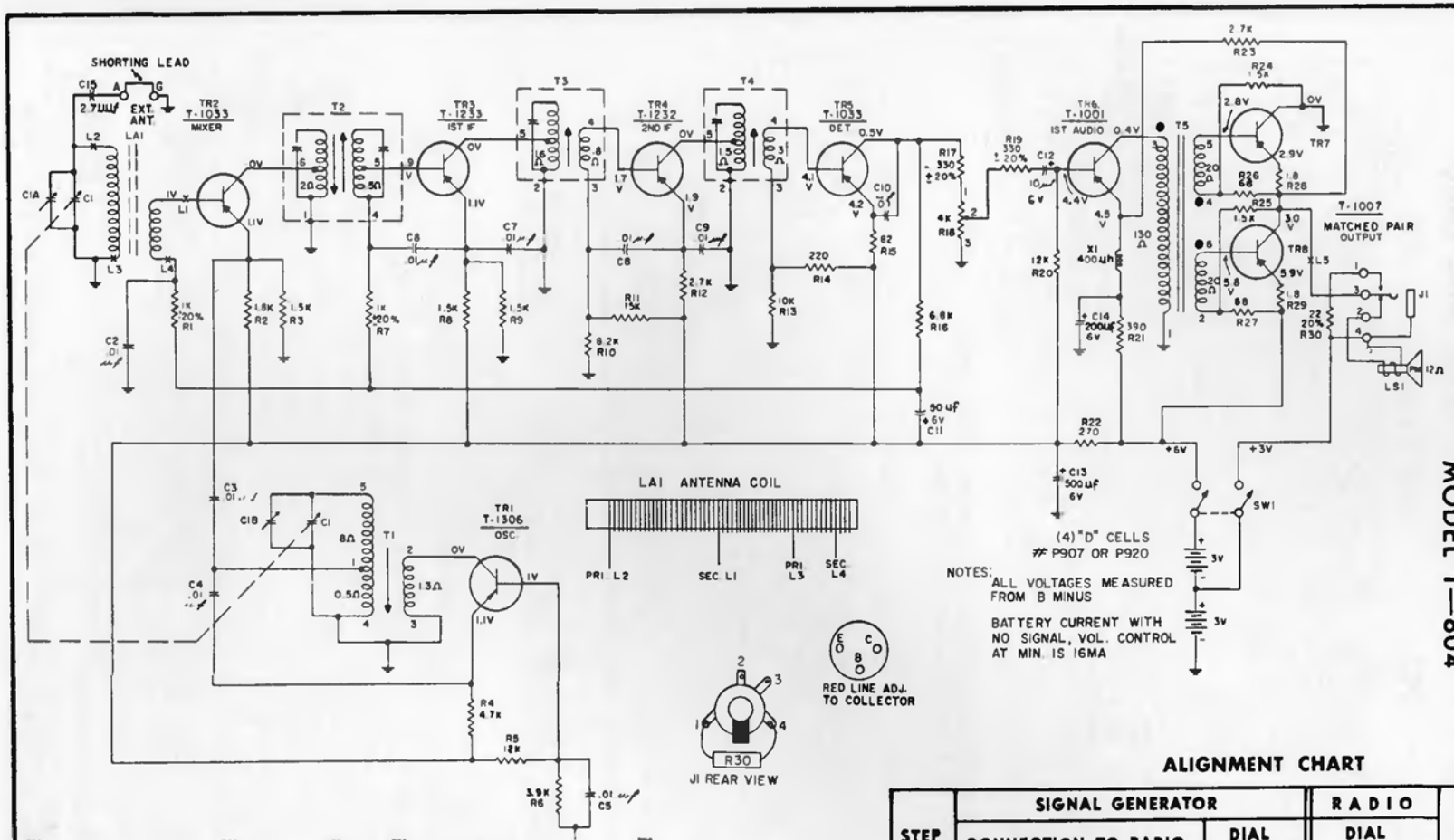

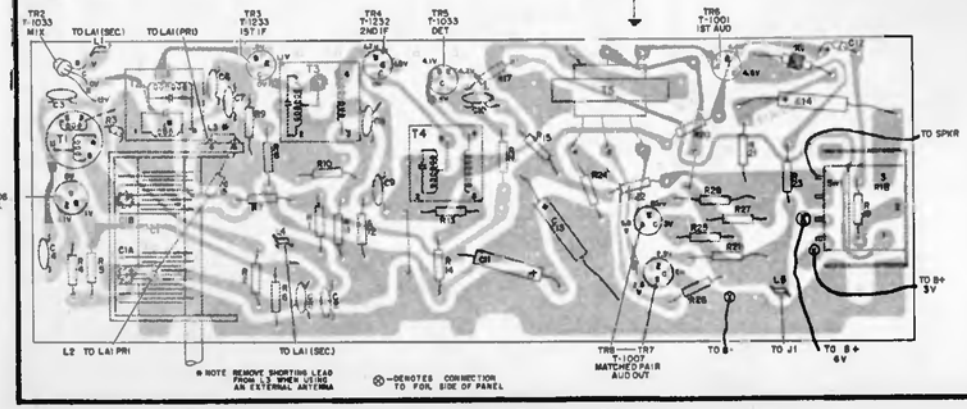

Component Layout, Bottom View

ALIGNMENT CHART

STEP	SIGNAL GENERATOR		RADIO	ADJUST
	CONNECTION TO RADIO	DIAL SETTING	DIAL SETTING	
1	Connect signal generator through a .1-uf. condenser to ant. section of gang.	455 kc.	Tuning gang fully open.	T4—3rd i-f pri. T3—2nd i-f pri. T2—bot. core T2—top core
2	Use radiating loop. (See NOTE 1 below).	600 kc.	600 kc.	T1—ocs. core
3	Same as step 2.	1620 kc.	1620 kc. (Tuning gang fully open)	C1B—osc. trim.
4	Same as step 2.	1400 kc.	1400 kc.	C1A—ant. trim.
5	Repeat steps 2, 3 and 4 until no further improvement is obtained.			

NOTE 1. Use a 6-to-8-turn, 6-inch diameter loop made up of insulated wire.

PHILCO

TABLE/CLOCK RADIO L790, L792, L794, L795, L796, L797, L860, L861, L862, L863, L865, L866, AND L868

(Continued on the next page at right)

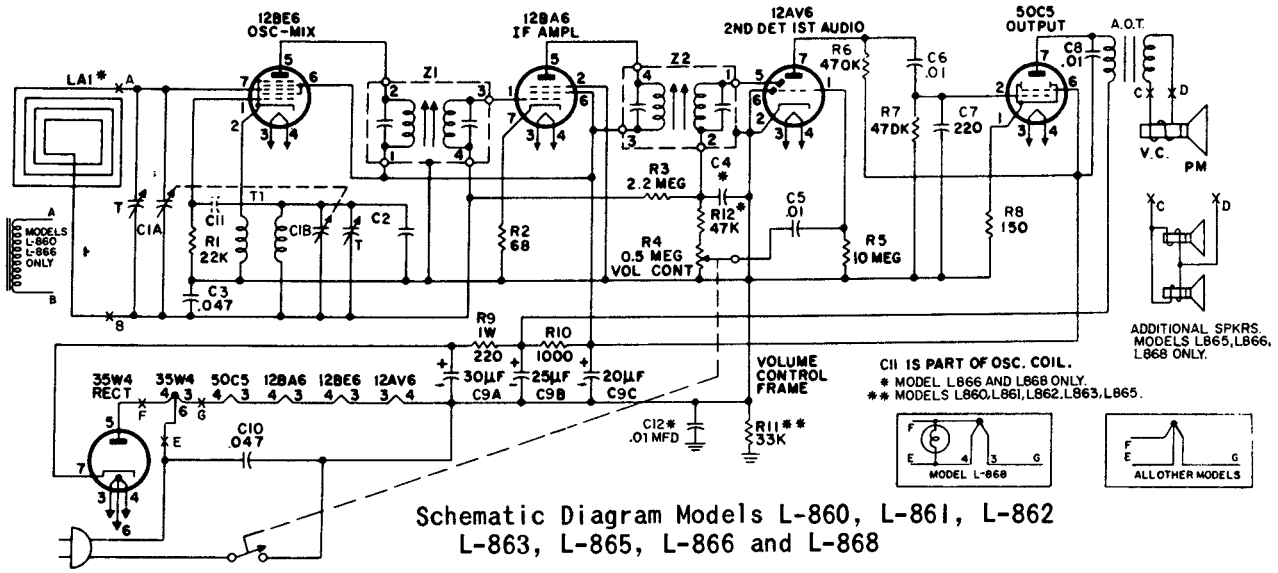

Schematic Diagram Models L-860, L-861, L-862 L-863, L-865, L-866 and L-868

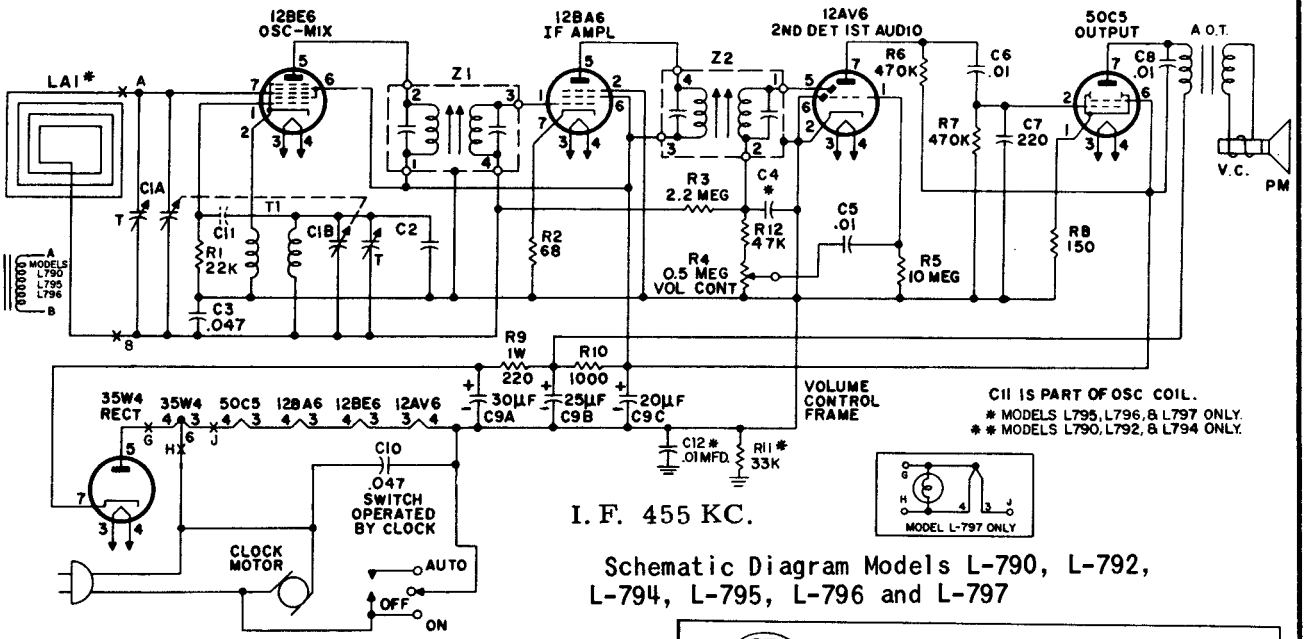

Schematic Diagram Models L-790, L-792, L-794, L-795, L-796 and L-797

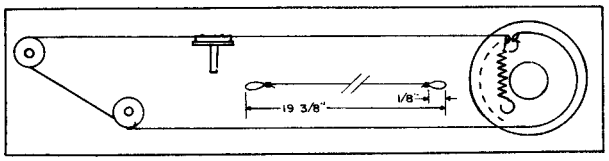

Dial Stringing Models L-794, L-863, L-865

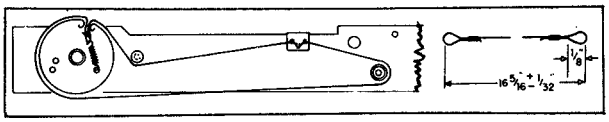

Dial Stringing Models L-795, L-796, and L-866

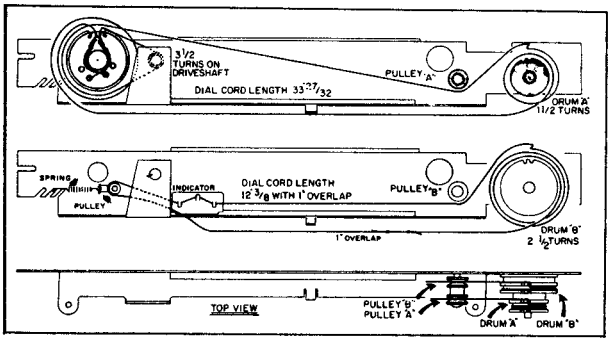

Dial Stringing Models L-797, L-868

PHILCO

TABLE/CLOCK RADIO L790, L792, L794, L795, L796, L797, L860, L861, L862, L863, L865, L866, AND L868

(Continued from preceding page at left)

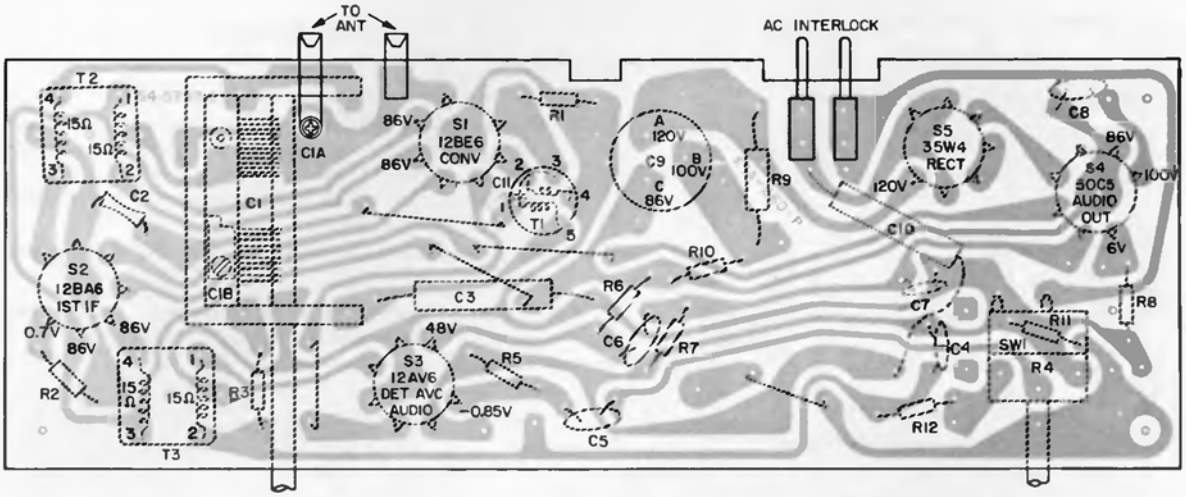

Component Layout, Foil Side of Perma-Circuit Panel
Models L-792, L-794, L-861, L-862, L-863 and L-865

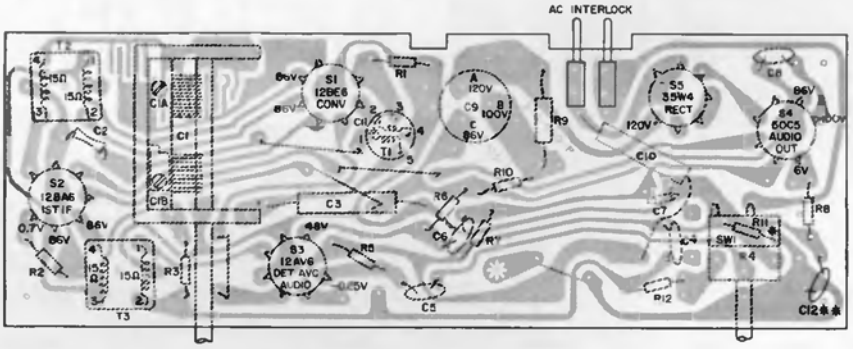

Component Layout, Foil Side of Perma-Circuit Panel,
Models L-790, L-795, L-796, L-860, and L-866

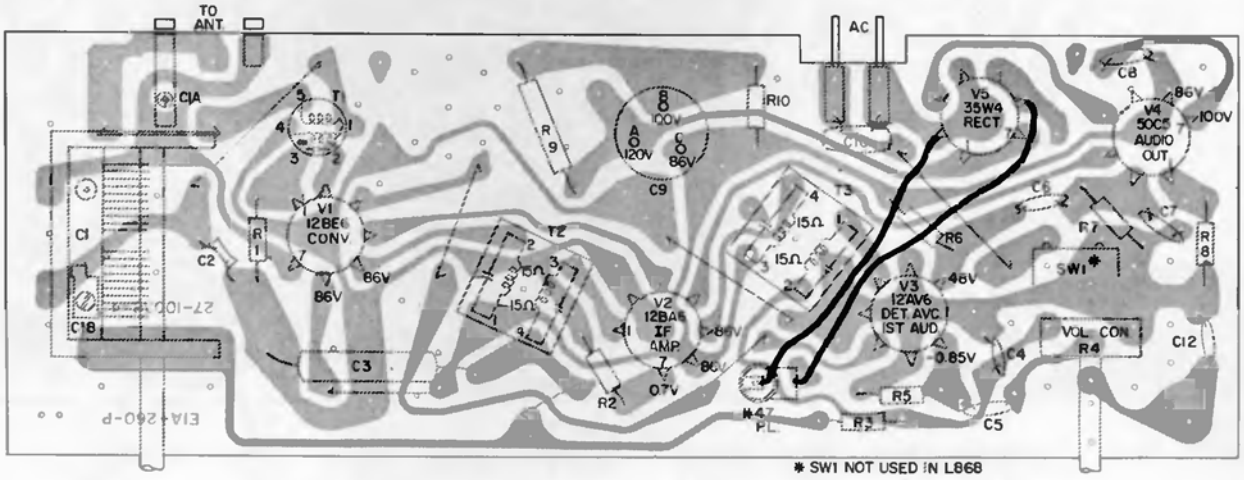

Component Layout, Foil Side of Perma Circuit Panel Models L-797, L-868

PHILCO

TABLE/CLOCK AM-FM RADIO
L799, L926, L927, L928, & L929

(See page 109 for schematic and other service information)

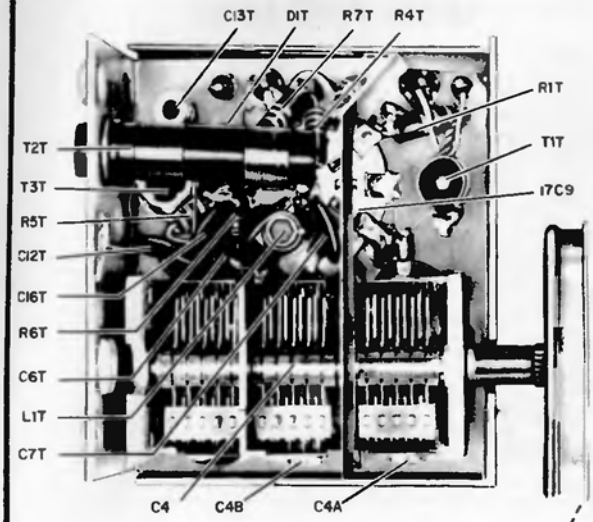

FM Tuner, Bottom View,

CLOCK REMOVAL

Model L-799

1. Remove all knobs from front panel.
2. Remove clear plastic front by gently releasing the mounting tab at the bottom center with a screwdriver.
3. Remove clock hands being especially careful of the minute hand.
4. Remove connecting leads from the clock assembly.
5. Using a narrow blade screwdriver, gently remove the four clock mounting clips.

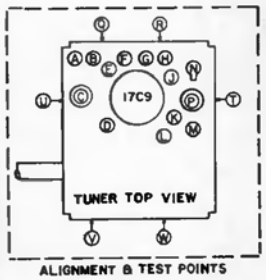

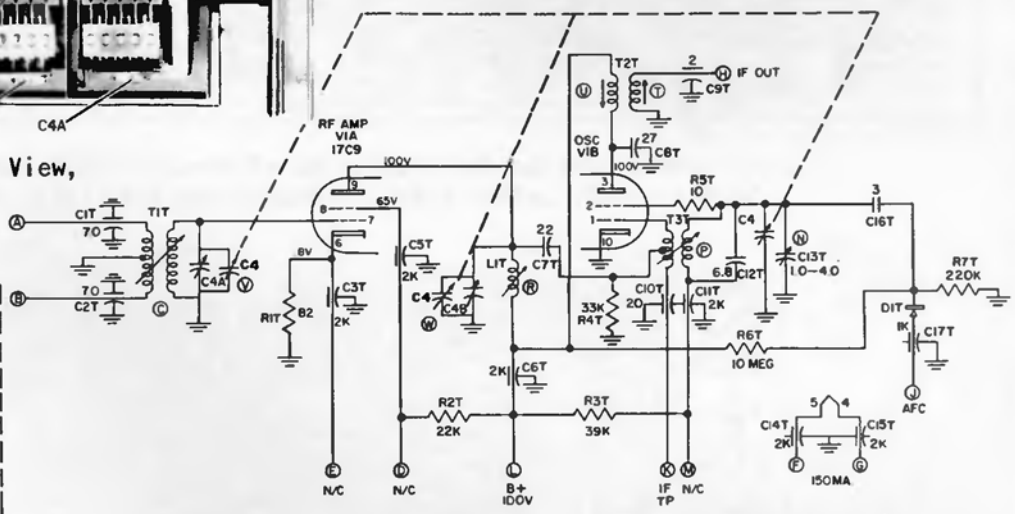

Schematic Diagram, FM Tuner (All Models)

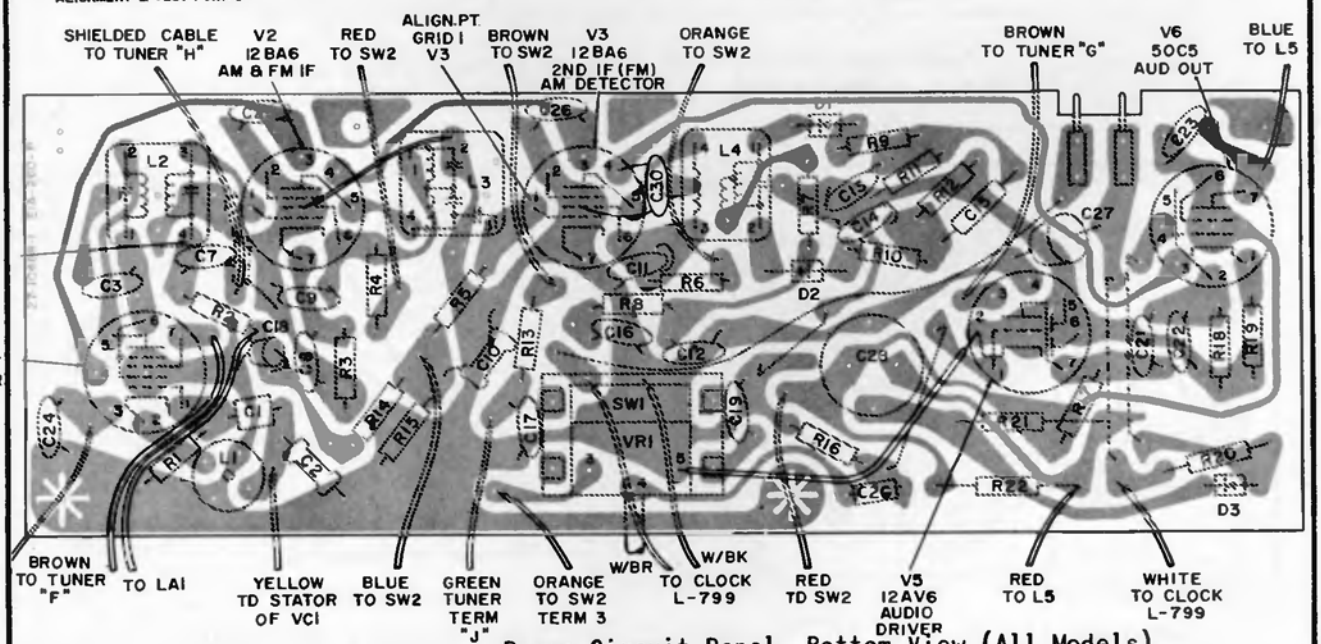

Perma-Circuit Panel, Bottom View (All Models)

PHILCO

TABLE/CLOCK AM-FM RADIO
L799, L926, L927, L928, & L929

(Continued from page 108. Refer to that page for additional service material.)

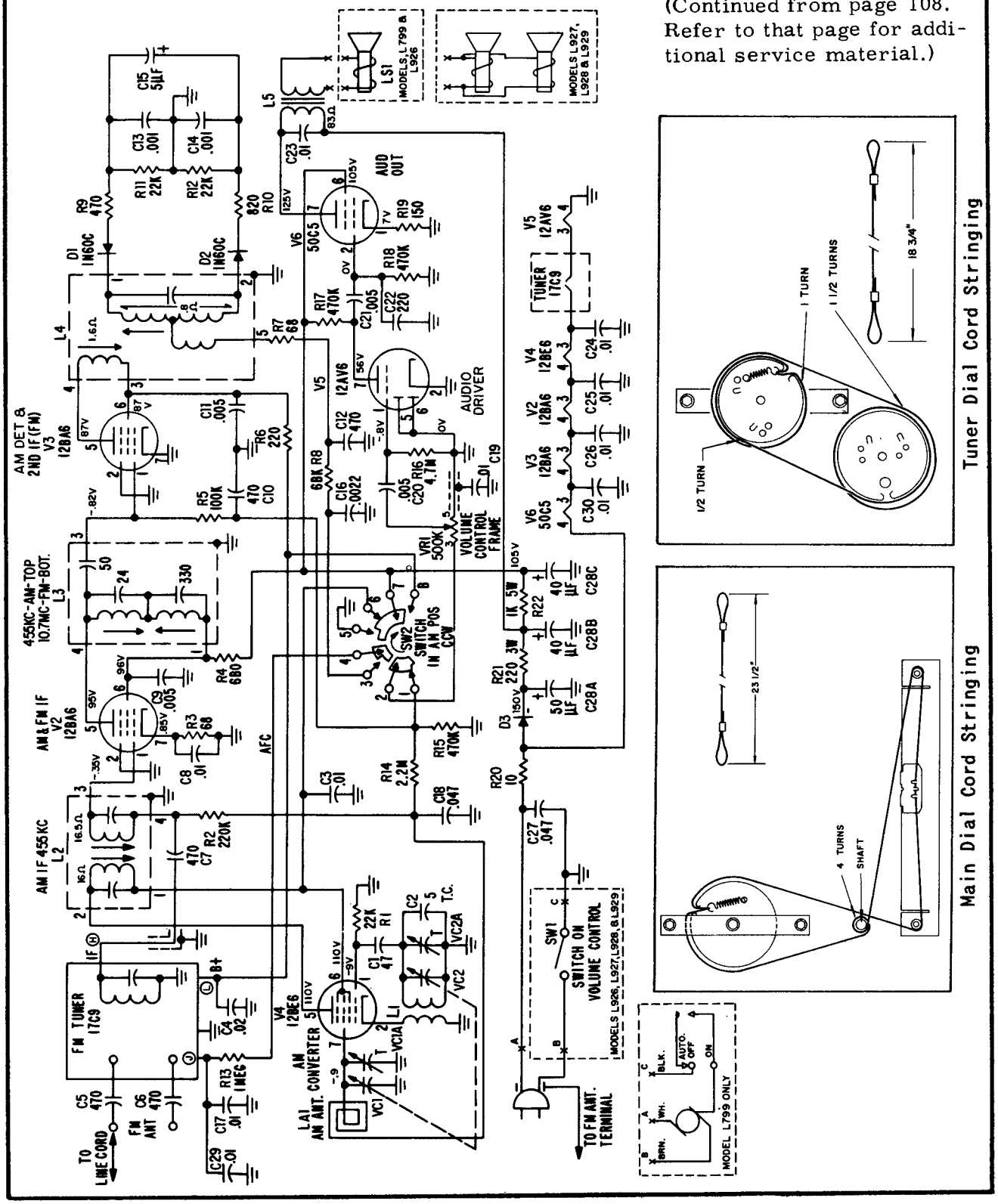

PHILCO MODEL T-805

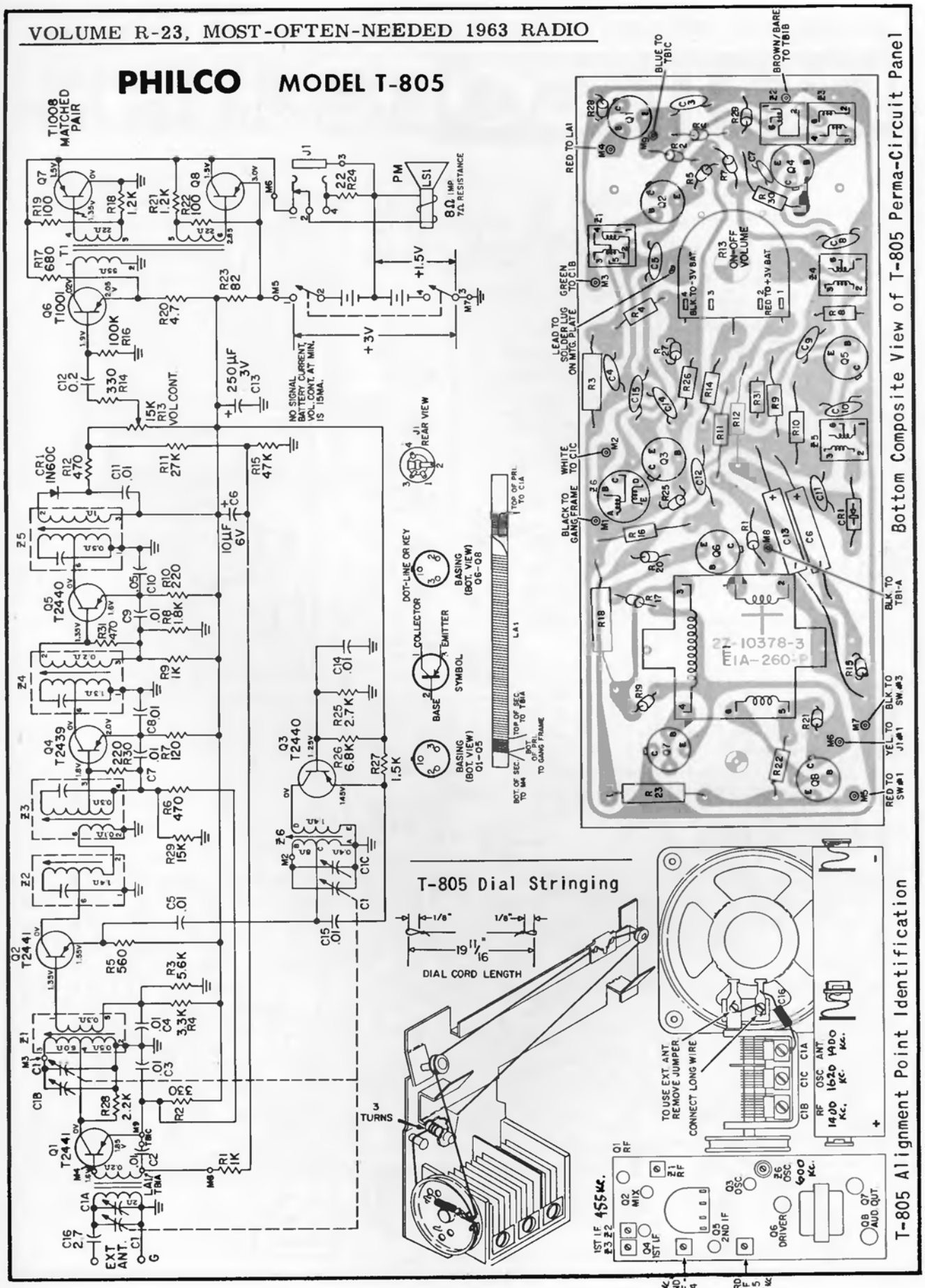

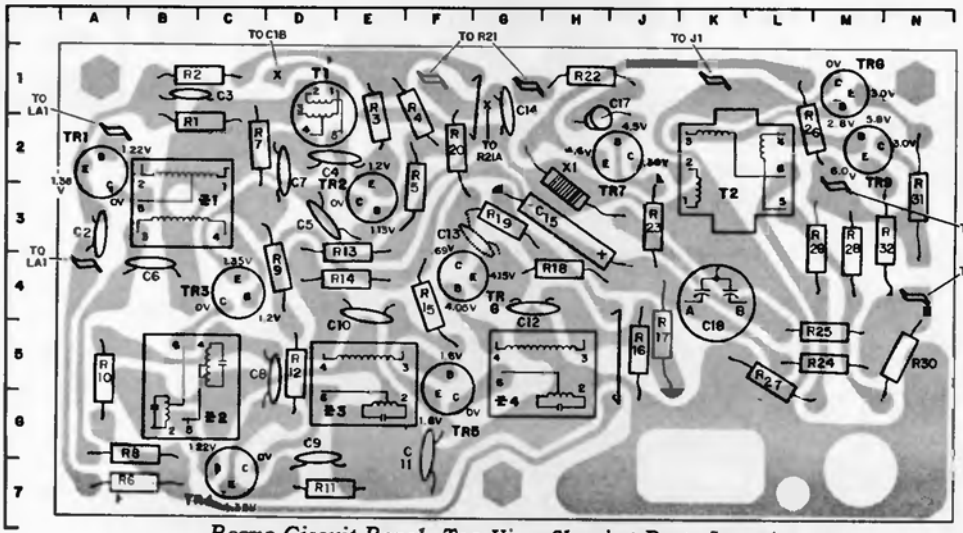

PHILCO

MODEL T-902

I. F. 455 KC.

Perma Circuit Panel, Top View Showing Parts Location

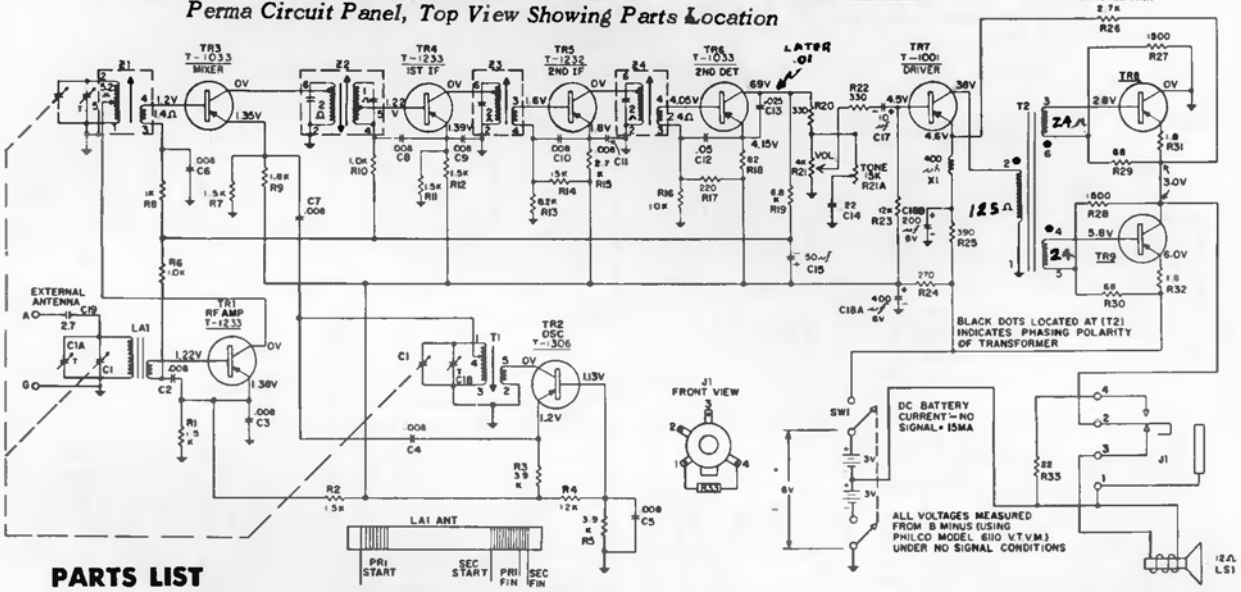

PARTS LIST

Symbol	Location	Description	Service Part No.
C1		Capacitor, variable tuning	31-2791-3
C2	A3	Capacitor, .008 mf, RF base	30-1262-31
C3	B1	Capacitor, .008 mf, RF emitter	30-1262-31
C4	D2	Capacitor, .008 mf, osc. emitter	30-1262-31
C5	D3	Capacitor, .008 mf, osc. base	30-1262-31
C6	B4	Capacitor, .008 mf, mixer base	30-1262-31
C7	D2	Capacitor, .008 mf, mixer emitter	30-1262-31
C8	C5	Capacitor, .008 mf, 1st IF emitter	30-1262-31
C9	D6	Capacitor, .008 mf, 1st IF emitter	30-1262-31
C10	E4	Capacitor, .008 mf, 2nd IF emitter	30-1262-31
C11	F6	Capacitor, .008 mf, 2nd IF emitter	30-1262-31
C12	G4	Capacitor, .05 mf, 2nd det. emitter	30-1279-1
C13	G3	Capacitor, .025 mf, det. collector	30-1272-4
C14		Capacitor, .22 mf, tone control	30-1274-2
C15	H3	Capacitor, electrolytic, 50 mf, 6V	30-2588-11
C17	H1	Capacitor, electrolytic, 10 mf, 6V	30-2591-9
C18	K4	Capacitor, electrolytic, 400 mf - 200mf, 6V	30-2602-3
C19		Capacitor, 2.7 mmfd, external ant.	30-1221-18
LS1		Speaker, 12Ω V.C., 4-inch	36-1675-13
R1	C2	Resistor, 1.5K, RF amp. emitter	66-2158340
R2	C1	Resistor, 1.5K, RF amp. emitter	66-2158340
R3	E1	Resistor, 3.9K, osc. emitter	66-2398340
R4	F1	Resistor, 12K, osc. base	66-3128340
R5	F2	Resistor, 3.9K, osc. base	66-2398340
R6	B7	Resistor, 1K, RF amp. base	66-2108340
R7	C2	Resistor, 1.5K, mixer emitter	66-2158340
R8	A6	Resistor, 1K, mixer base	66-2108340
R9	D4	Resistor, 1.8K mixer emitter	66-2188340
R10	A5	Resistor, 1K, 1st IF base	66-2108340
R11	D7	Resistor, 1.5K, 1st IF emitter	66-2158340
R12	D5	Resistor, 1.5K, 1st IF emitter	66-2158340
R13	E3	Resistor, 8.2K, 2nd IF base	66-2828340
R14	E4	Resistor, 15K, 2nd IF base	66-3158340
R15	F4	Resistor, 2.7K, 2nd IF emitter	66-2278340
R16	J5	Resistor, 10K, 2nd det. base	66-3108340
R17	J5	Resistor, 220 ohms, 2nd det. base	66-1228340
R18	H4	Resistor, 82 ohms, 2nd det. emitter	66-0828340
R19	G3	Resistor, 6.8K, 2nd det. collector	66-2688340
R20	F2	Resistor, 330 ohms, 2nd det. collector	66-1338340
R21		Resistor, variable vol. cont., 4K	33-5588-19
R21A		Resistor, variable tone control, 15K	33-5572-50
R22	H1	Resistor, 330 ohms, driver input fil.	66-1338340
R23	J3	Resistor, 12K, driver base	66-3128340
R24	M5	Resistor, 270 ohms, B+ filter	66-1278340
R25	M4	Resistor, 390 ohms, audio driver	66-1398340
R26	L1	Resistor, 2.7K, audio feed back	66-2278340
R27	L5	Resistor, 1500 ohms, audio out. collector	66-2158340
R28	M3	Resistor, 1500 ohms, audio out. collector	66-2158340
R29	M3	Resistor, 68 ohms, audio out. base	66-0688340
R30	N5	Resistor, 68 ohms, audio out. base	66-0688340
R31	N2	Resistor, 1.8 ohms, audio out. emitter	66-9183360
R32	N3	Resistor, 1.8 ohms, audio out. emitter	66-9183360
R33		Resistor, 22 ohms, listening jack	66-0228340
SW1		Switch (Part of Vol. Cont. R21)	
T1	D1	Transformer, osc.	32-4669-8
T2	K2	Transformer, audio interstage	32-8946-1
TR1	A2	Transistor, RF amp., T-1233	34-6000-12
TR2	E2	Transistor, osc., T-1306	34-6000-17
TR3	C4	Transistor, mixer T-1033	34-6000-3
TR4	C7	Transistor, 1st IF, T-1233	34-6000-12
TR5	F5	Transistor, 2nd IF T-1232	34-6000-11
TR6	F4	Transistor, 2nd det., T-1033	34-6000-3
TR7	J2	Transistor, audio driver, T-1001	34-6001-16
TR8/9	M2	Transistors, audio output, matched pair T-1007	34-6000-8
X1	H2	Choke, 400 MH	32-4685-1
Z1	B3	Transformer, RF	32-4793-1
Z2	B6	Transformer, 1st IF	32-4738-1
Z3	E5	Transformer, 2nd IF	32-4738-11

PHILCO PORTABLE AM-FM RADIO TRANSISTOR MODEL T-905

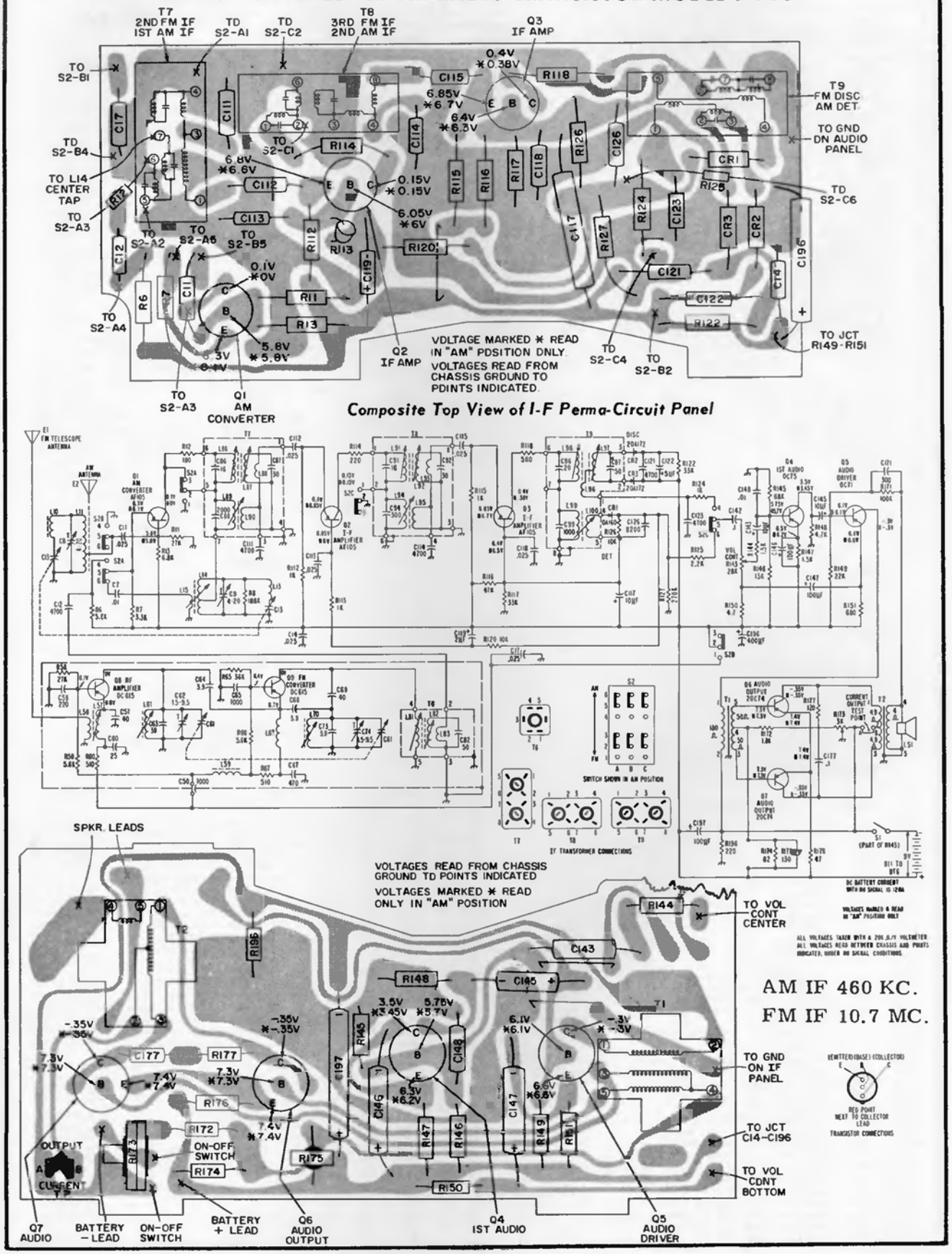

Composite Top View of I-F Perma-Circuit Panel

Composite Top View of Audio Perma-Circuit Panel

PHILCO

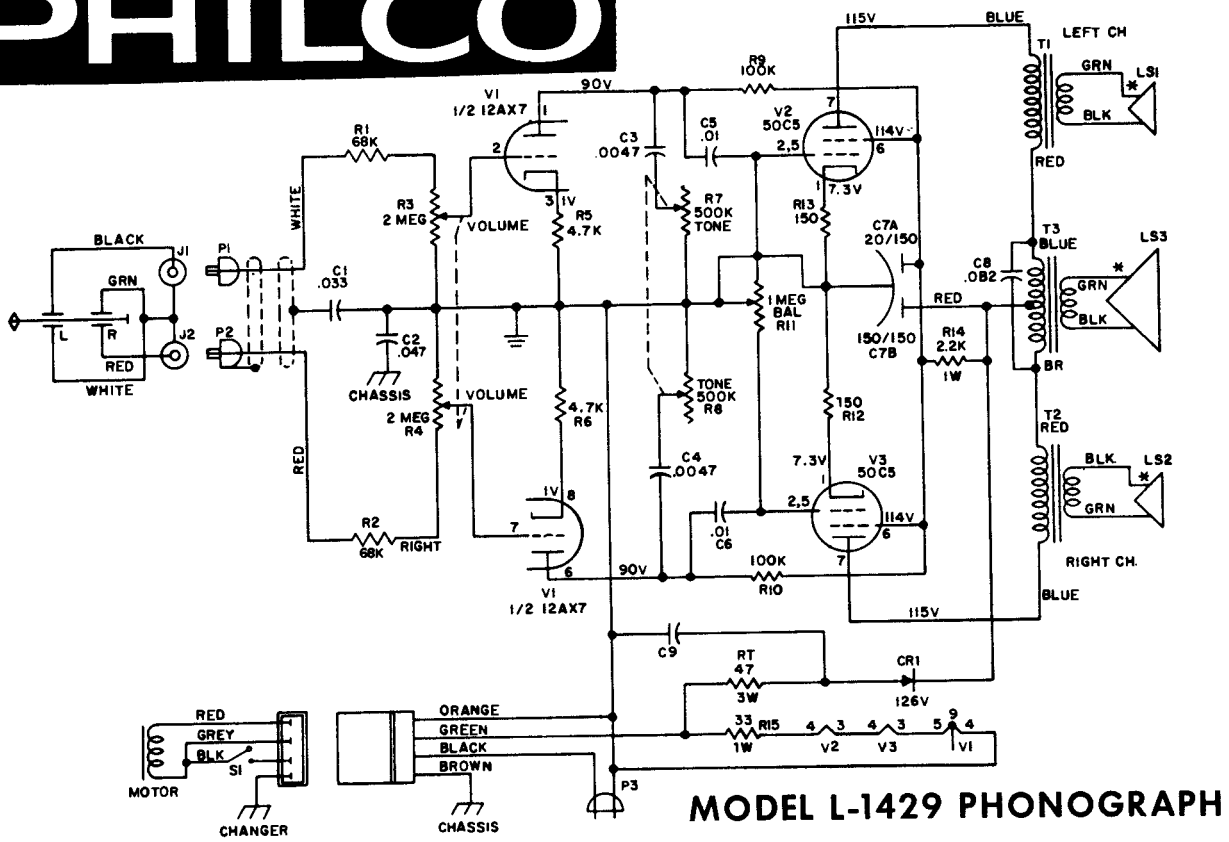

MODEL L-1429 PHONOGRAPH

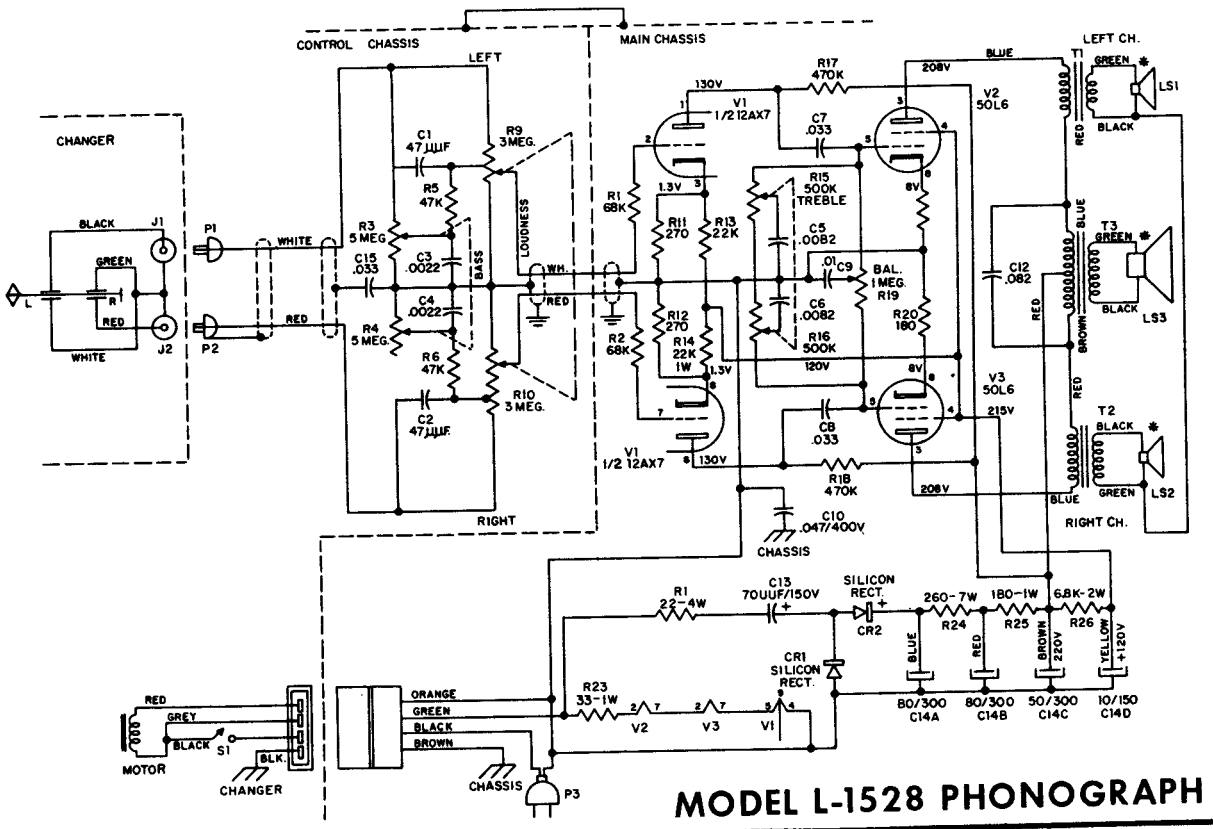

MODEL L-1528 PHONOGRAPH

PHILCO

HI—FI STEREO MODEL L-1532

AMPLIFIER REMOVAL

1. Remove two Phillips screws from back of cabinet. Do not remove two screws that fasten grille to cabinet back.
2. Remove plug on right side of changer base. Grasp washer on changer, hold down screw with long nose pliers. Grasp washer on side opposite washer opening through hole in right side of changer bin.
3. Lift right side of changer and slide changer to the right in order to free left side.
4. Unplug phono power and phono input cables. Set changer aside.
5. With a short screw driver, remove the two Phillips screws holding the amplifier compartment in the cabinet. These screws are located at the top of the changer compartment and run through the changer bin stop blocks.
6. Loosen phono power and phono input cable hold downs.
7. Slide amplifier compartment out of cabinet guiding all cables through openings in side and back of cabinet.
8. Remove knobs and T-nuts located on controls behind knobs.

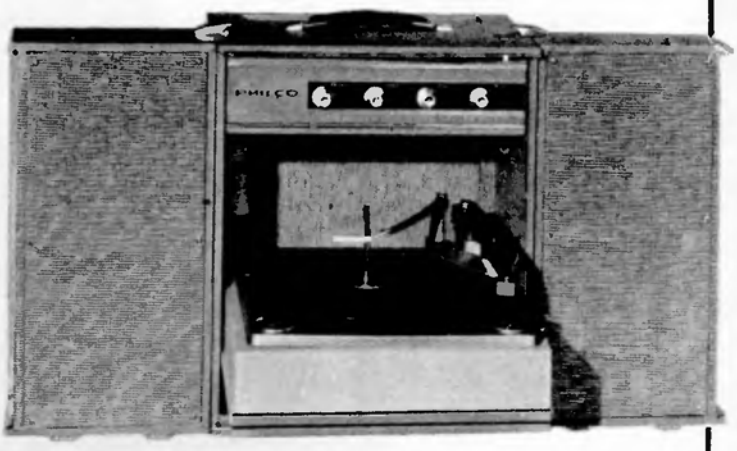

9. Remove two speed nuts from studs on amplifier rear flange. Lift amplifier to clear studs and pull away from compartment.

TUBE REMOVAL

Remove grille on cabinet back in order to check or replace tubes.

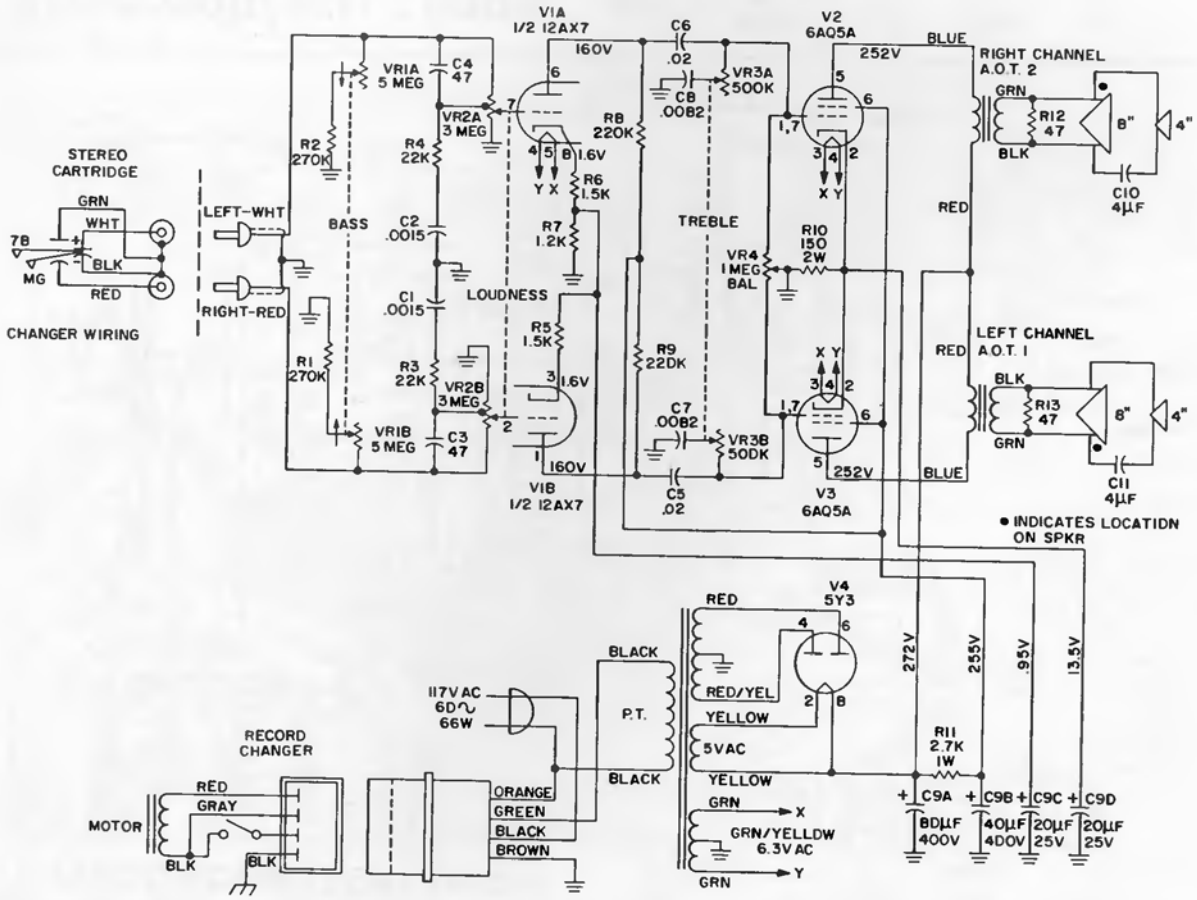

PHILCO

HI-FI STEREO MODEL L-1650

AMPLIFIER REMOVAL

The L-1650 is mounted in the cabinet by two deep T-nuts. The T-nuts screw onto the volume and balance controls that project through the turntable base board. The a-c interlock panel is fastened to the back of the cabinet by two wood screws. The speaker wires, phono power jack and audio jacks are all socket connections.

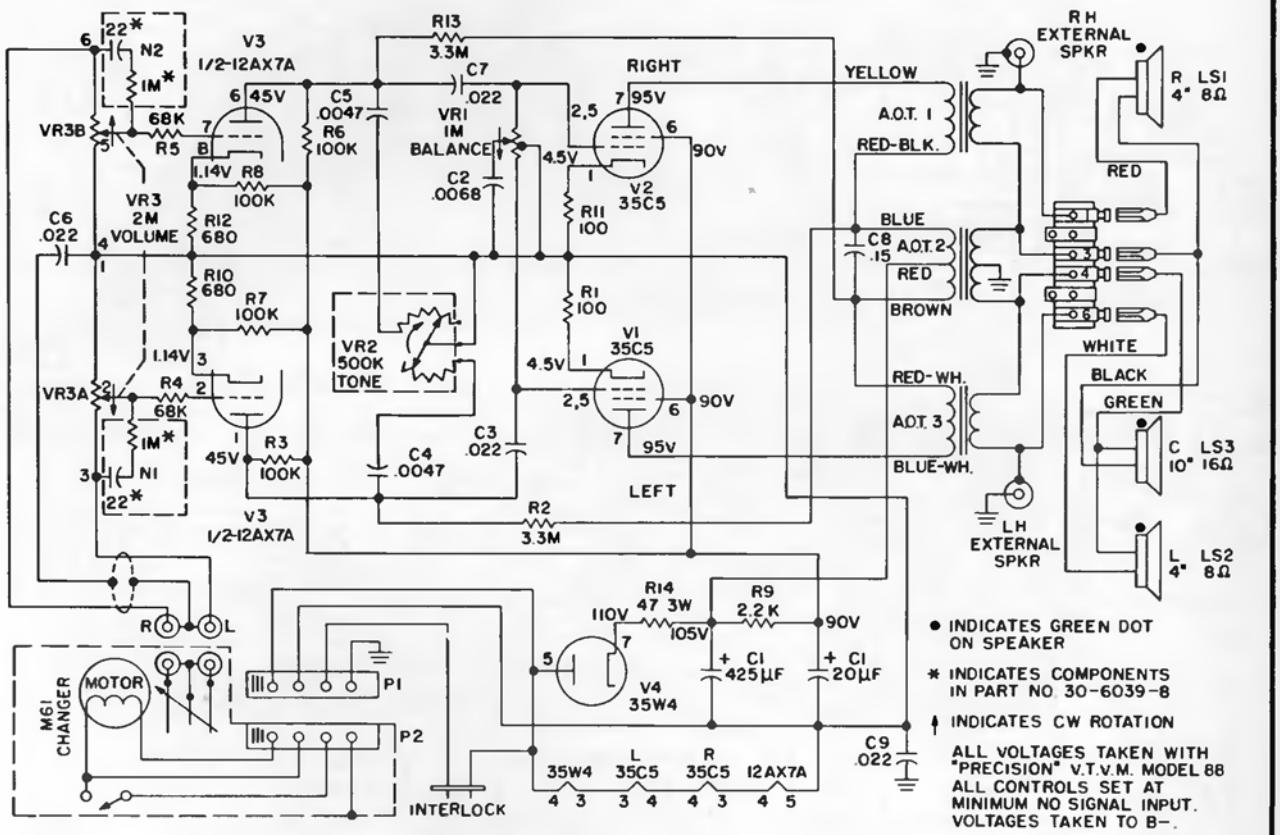

- ● INDICATES GREEN DOT ON SPEAKER
- * INDICATES COMPONENTS IN PART NO. 30-6039-8
- ↑ INDICATES CW ROTATION

ALL VOLTAGES TAKEN WITH "PRECISION" V.T.V.M. MODEL 88 ALL CONTROLS SET AT MINIMUM NO SIGNAL INPUT. VOLTAGES TAKEN TO B−.

LEGEND FOR PANEL WIRING

A. WH.-YEL TO P2
B. WH., TO L.C.2
C. WH., TO L.C.1
D. WH.-RED, TO P2
E. BLUE, TO C1
F. WH.-GY., TO P2
G. BLK., TO C1
H. RED, TO A.O.T.2
I. OR., TO C1
J. WH.-BLK. TO P2
K. BLUE-WH. TO A.O.T.3
L. RED-BLK. TO A.O.T.1
M. BLUE TO A.O.T.2
N. YELLOW TO A.O.T.1
O. RED-WH. TO A.O.T.3
P. BRWN. TO A.O.T.2

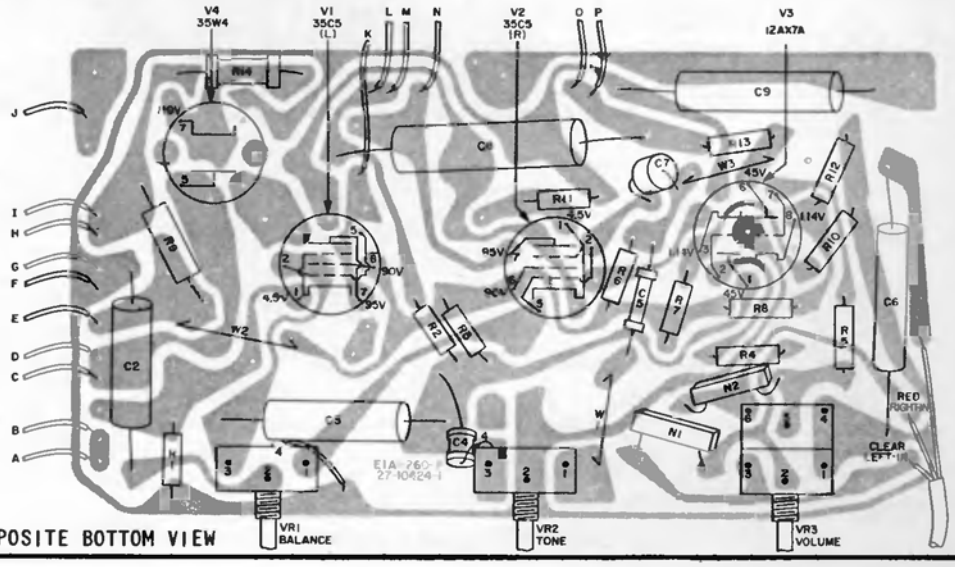

COMPOSITE BOTTOM VIEW

RCA VICTOR

3-RD-1 Series, Model 3-RD-10, Chassis RC-1202AA,
3-RD-3 Series, Models 3-RD-30, 3-RD-35, 3-RD-37, Chassis RC-1202AB,
3-RA-1 Series, Model 3-RA-16, Chassis RC-1202W,
3-RA-2, Series, Models 3-RA-20, 3-RA-25, 3-RA-27, Chassis RC-1202U.

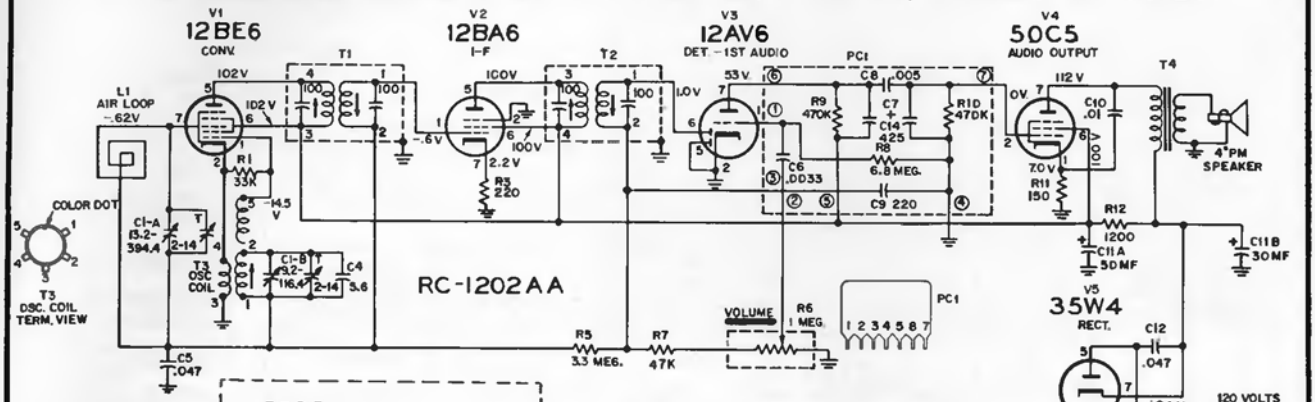

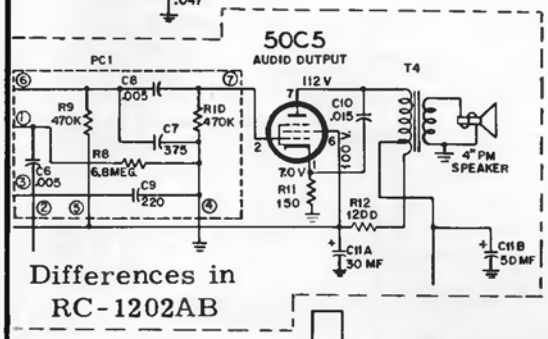

Differences in RC-1202AB

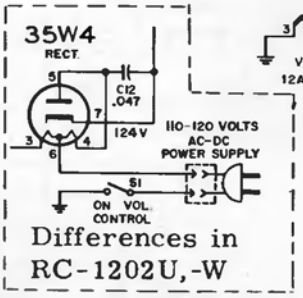

Differences in RC-1202U,-W

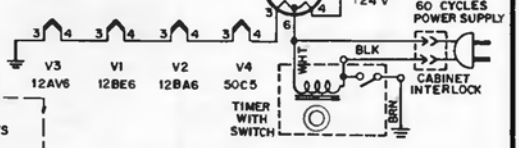

RESISTANCE VALUES ARE IN OHMS. K= 1000
ALL CAPACITANCE VALUES LESS THAN 1.0 ARE IN MF, VALUES 1.0 & ABOVE ARE IN MMF, EXCEPT AS NOTED.
VOLTAGES MEASURED TO COMMON NEGATIVE (⏚)

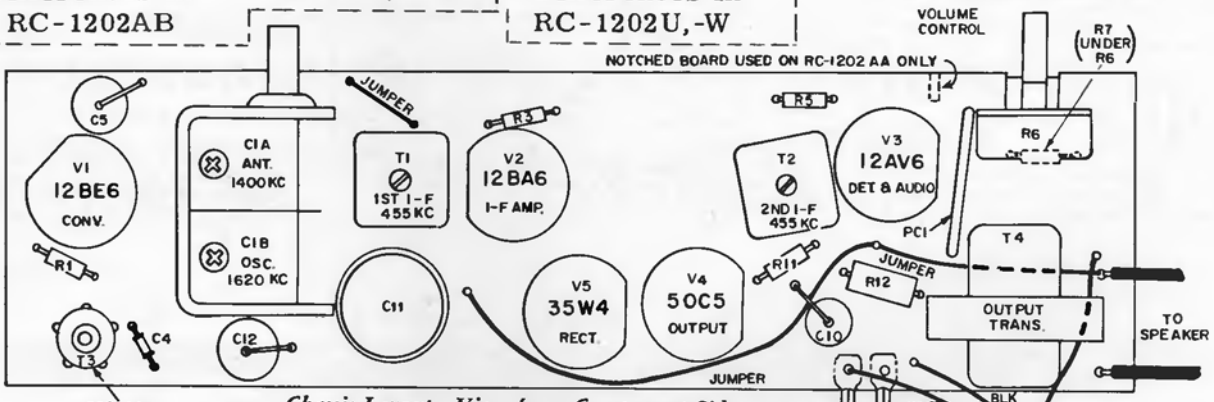

Chassis Layout—View from Component Side

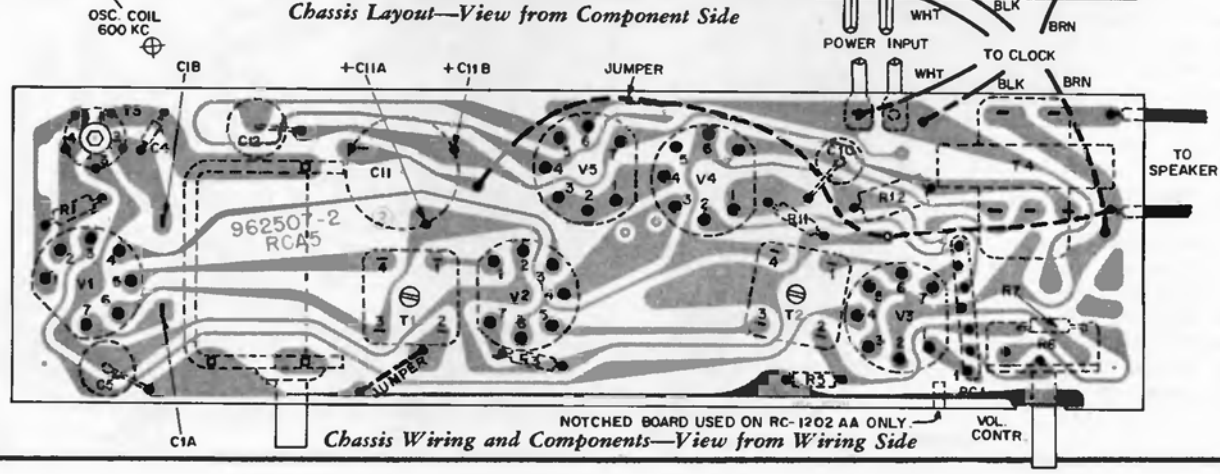

Chassis Wiring and Components—View from Wiring Side

RCA VICTOR

3RD4 Series, Models 3RD40, 3RD41, 3RD45, 3RD49, Chassis RC-1202AC,
3RD5 Series, Models 3RD50, 3RD52, 3RD54, 3RD57, Chassis RC-1202AC,
3RD6 Series, Models 3RD61, 3RD65, 3RD67, 3RD69, Chassis RC-1202AD.

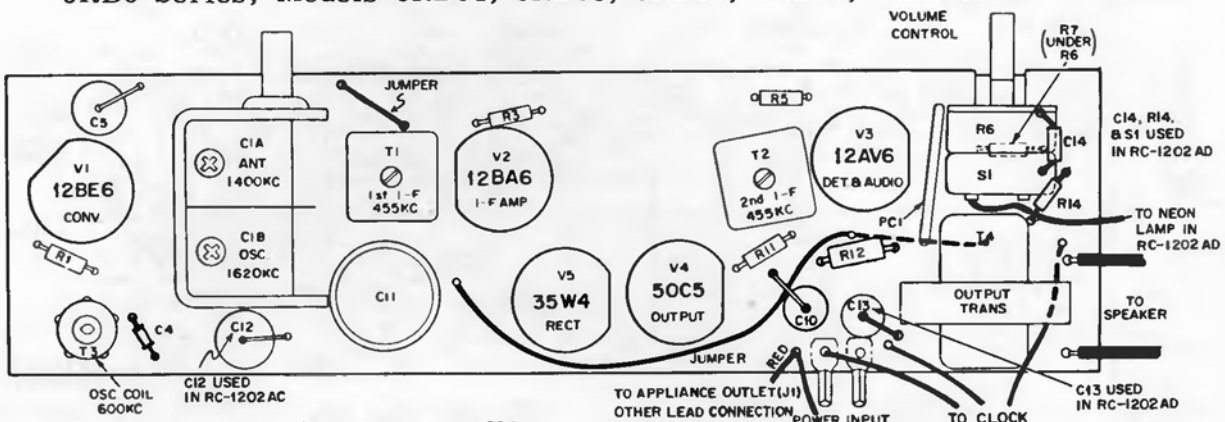

Chassis Layout—View from Component Side

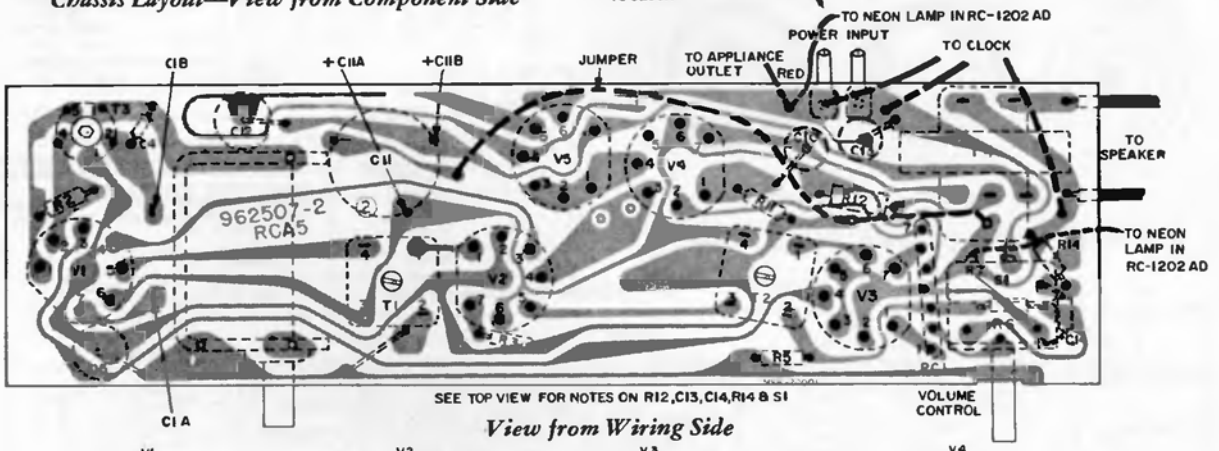

View from Wiring Side

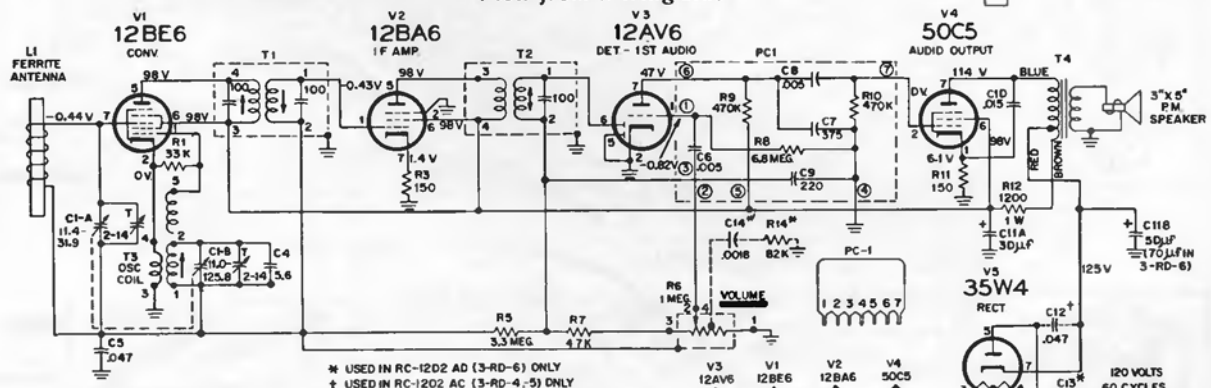

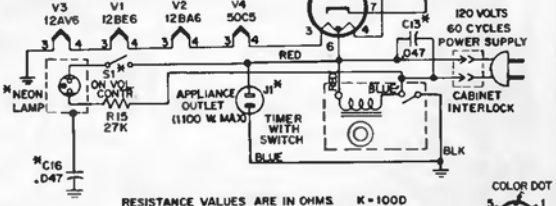

CABINET DISASSEMBLY

DO NOT ATTEMPT TO PULL THE KNOBS OFF FROM THE FRONT.

1. Remove the three cabinet assembly screws (one at top center and two at bottom front).
2. Grasp the instrument at the sides with the fingers extending around the front edge and onto the front.
3. Hold the cabinet face down and shake with a vertical motion until the sections separate. (fingers will catch the front section)
4. Set the instrument upright and complete the removal of the front section from the hood back.

RESISTANCE VALUES ARE IN OHMS. K = 1000

ALL CAPACITANCE VALUES LESS THAN 1.0 ARE IN µf, VALUES 1.0 AND ABOVE ARE IN µµf, EXCEPT AS NOTED.

VOLTAGES MEASURED TO COMMON NEGATIVE (⏚) WITH "VOLTOHMYST" AND SHOULD HOLD WITHIN ±20% WITH RATED LINE VOLTAGE.

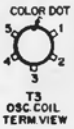

RCA VICTOR

3RA5 Series, Models 3RA50, 3RA51, 3RA52, 3RA54, Chassis RC-1202AE,
3RA6 Series, Models 3RA60, 3RA61, 3RA63, 3RA65, Chassis RC-1202AF.

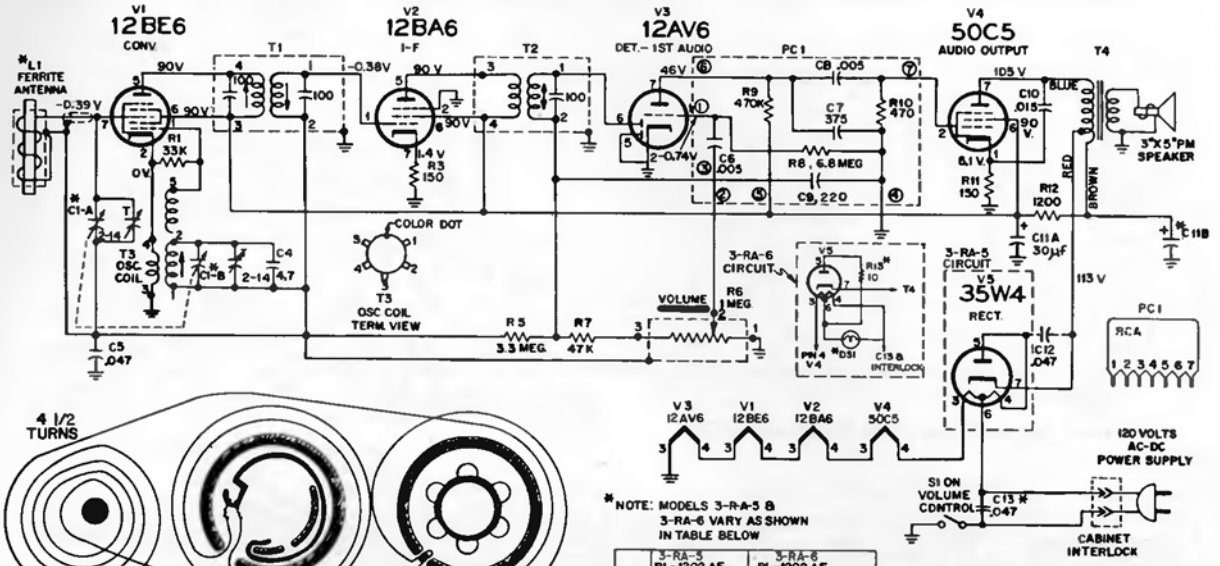

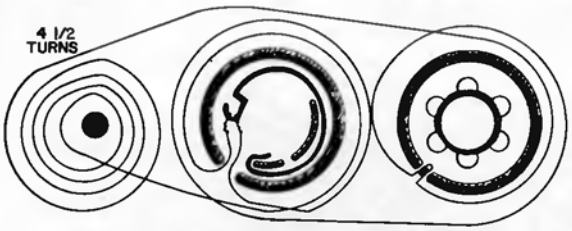

DIAL CORD LENGTH — 30" TO LOOP ENDS

DO NOT ATTEMPT TO REMOVE THE KNOBS

*NOTE: MODELS 3-RA-5 & 3-RA-6 VARY AS SHOWN IN TABLE BELOW

	3-RA-5 RL-1202 AE	3-RA-6 RL-1202 AF
L1	FERRITE ROD (SHIELD IS ON)	"FILTERAMIC" "FILTERAMIC ONLY"
C1-A	13.4-312.9	15.2-396.4
C1-B	13.0-127.8	11.2-118.4
C11-B	50µf	70 µf
C12	0.47µf	NOT USED
C13	NOT USED	0.47µf
DS1	NOT USED	G.E. #159
R13	NOT USED	10 OHM

K=1000

ALL RESISTANCE VALUES IN OHMS. ALL CAPACITANCE VALUES LESS THAN 1.0 IN µf VALUES ABOVE 1.0 IN µµf UNLESS OTHERWISE INDICATED.
VOLTAGES MEASURED TO COMMON NEGATIVE (⏚) WITH "VOLTOHMYST" AND SHOULD HOLD WITHIN ±20% WITH 120 VOLT INPUT.

View from Component Side

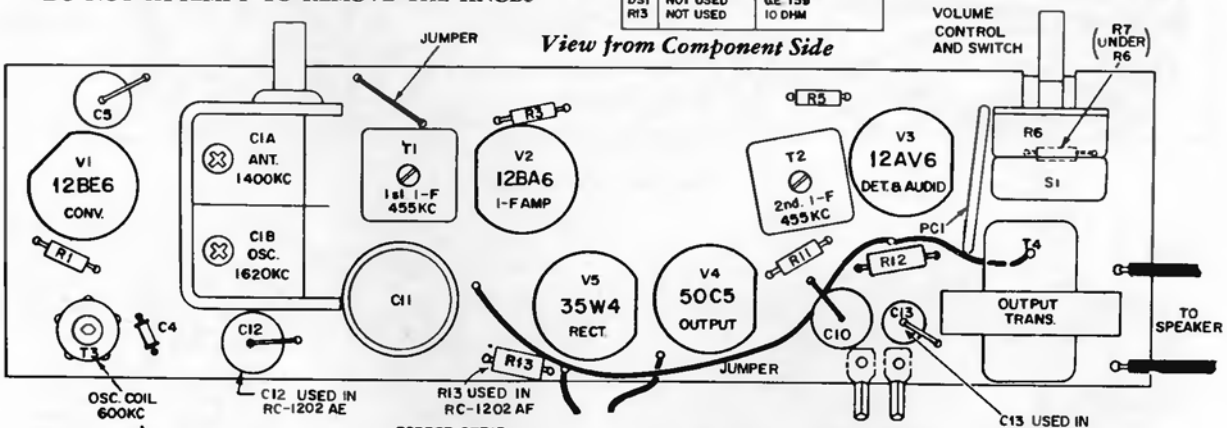

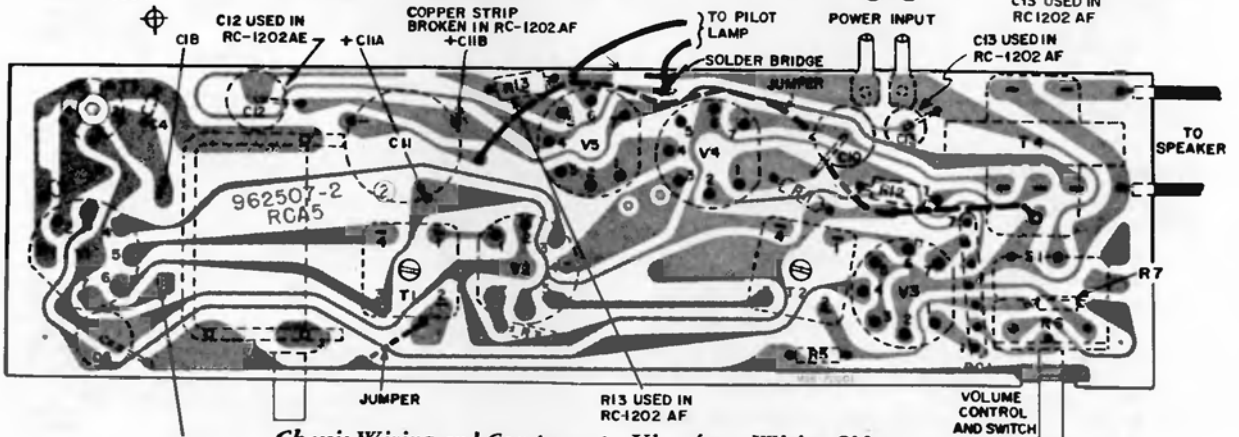

Chassis Wiring and Component—View from Wiring Side

RCA VICTOR

3RA3 Series, Models 3RA30, 3RA31, 3RA32, 3RA34, Chassis RC-1202AH

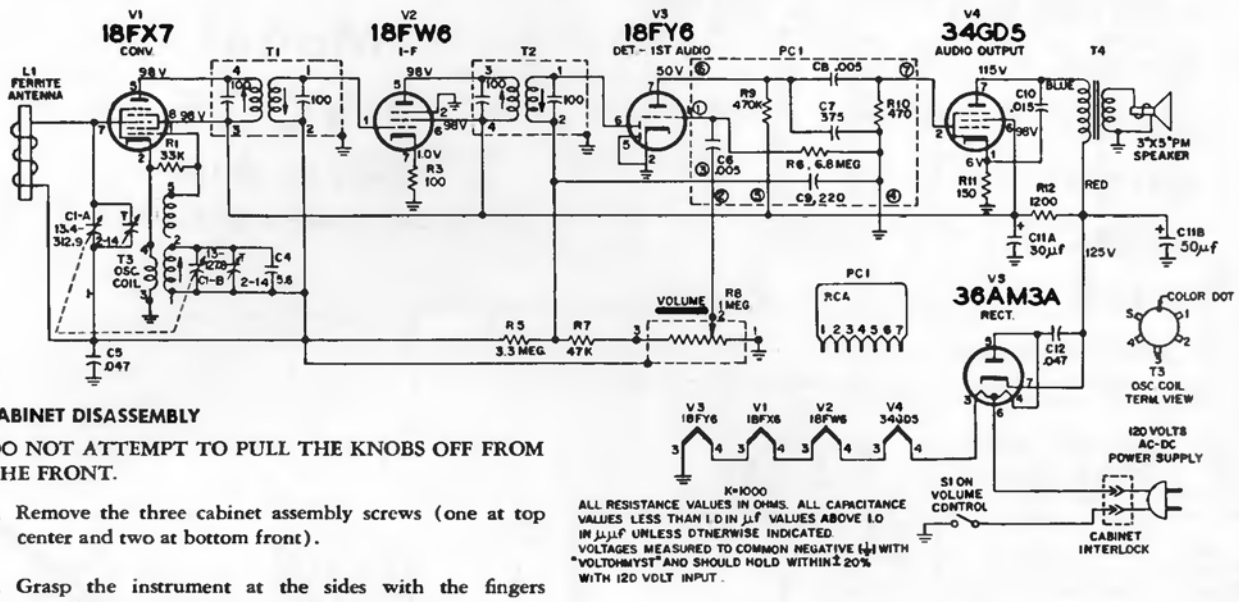

CABINET DISASSEMBLY

DO NOT ATTEMPT TO PULL THE KNOBS OFF FROM THE FRONT.

1. Remove the three cabinet assembly screws (one at top center and two at bottom front).
2. Grasp the instrument at the sides with the fingers extending around the front edge and onto the front.
3. Hold the cabinet face down and shake with a vertical motion until the sections separate. (fingers will catch the front section)
4. Set the instrument upright and complete the removal of the front section from the hood back.

CAPTIVE CONTROL KNOBS

The control knobs of this instrument are held captive to the cabinet by means of retaining clips on the knob shafts inside of the cabinet. If it should become necessary to unmount the chassis, *the chassis should be pulled out of the knobs.*

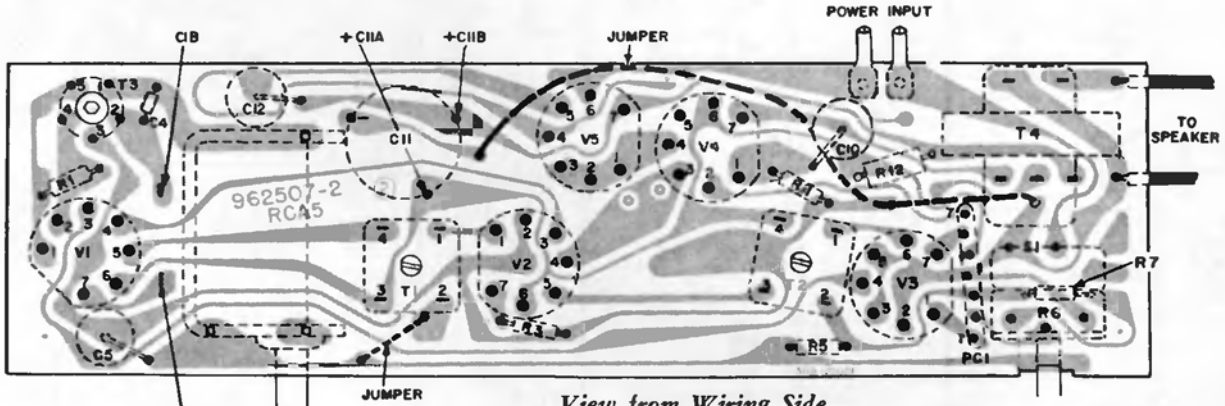

View from Wiring Side

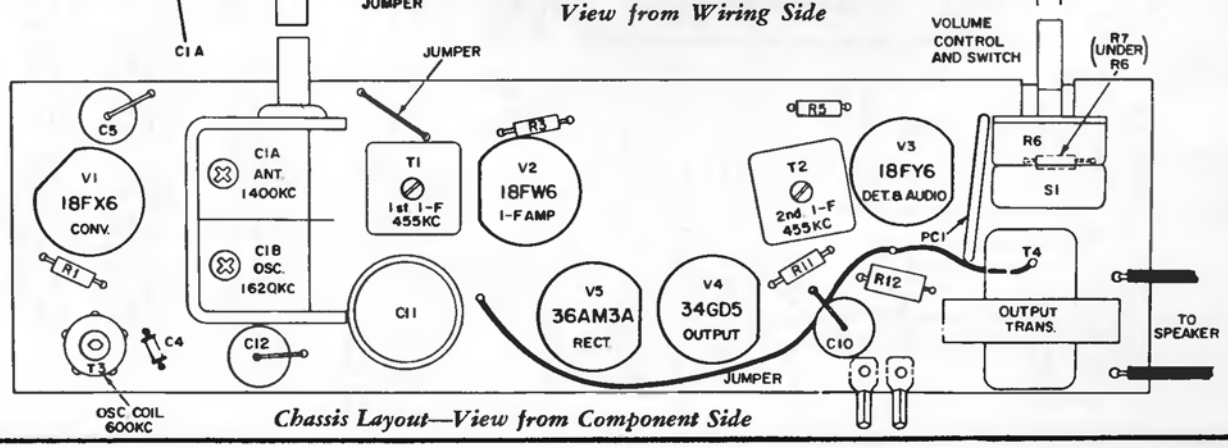

Chassis Layout—View from Component Side

RCA VICTOR

Model 3-VC-35

Chassis No. RS-175C

Record Changer RP-216-B2

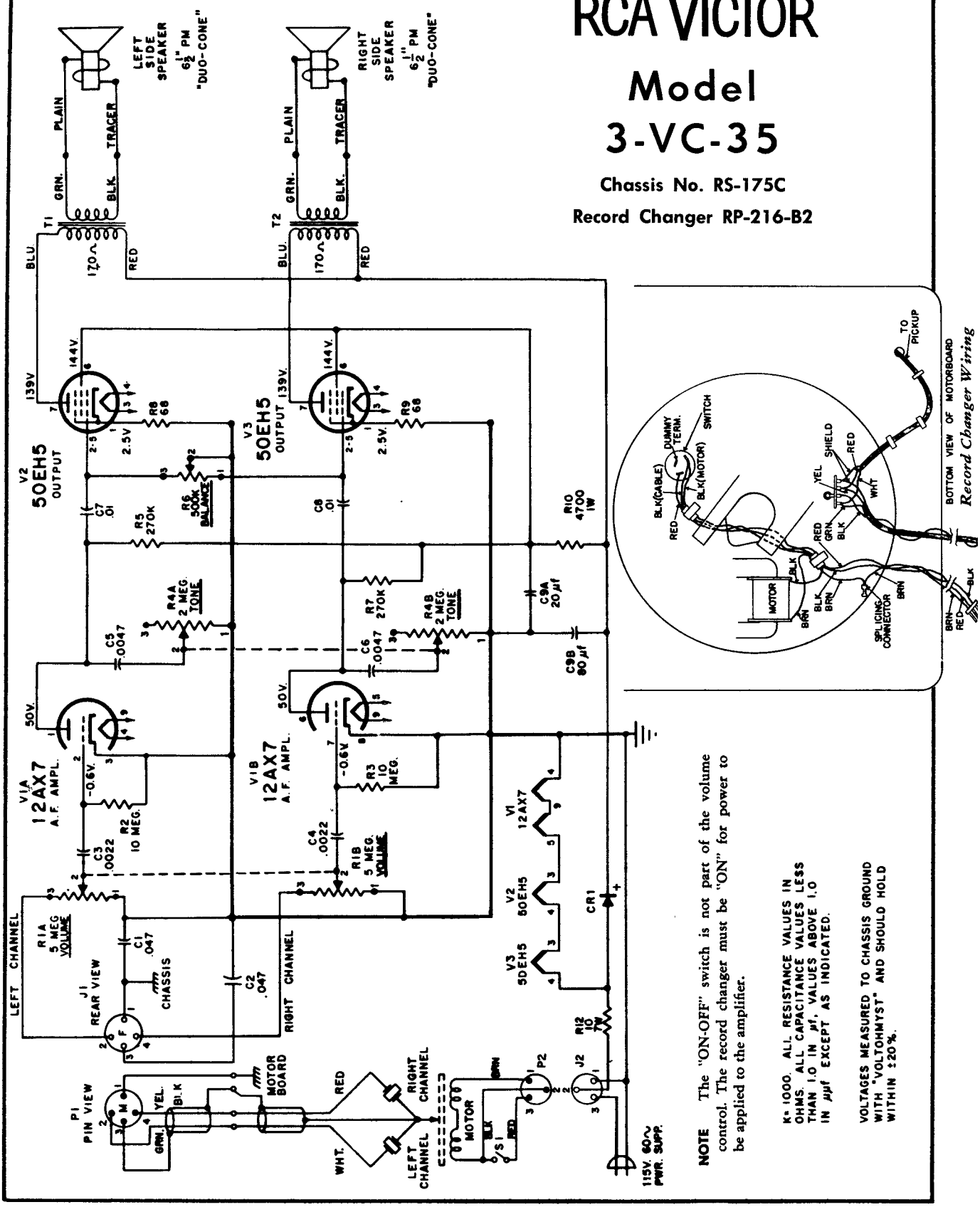

NOTE The "ON-OFF" switch is not part of the volume control. The record changer must be "ON" for power to be applied to the amplifier.

K= 1000. ALL RESISTANCE VALUES IN OHMS. ALL CAPACITANCE VALUES LESS THAN 1.0 IN µf, VALUES ABOVE 1.0 IN µµf EXCEPT AS INDICATED.

VOLTAGES MEASURED TO CHASSIS GROUND WITH "VOLTOHMYST" AND SHOULD HOLD WITHIN ±20%.

RCA VICTOR

The various models listed at right use Tuner Chassis RC-1206C that has the circuit shown on this page, or Chassis RC-1206F which is very similar. Other service material and FM-Stereo Chassis RS-200C circuit is on the next page, over, and material on Amplifier Chassis RS-193A, B, D, E, F, is on the following page.

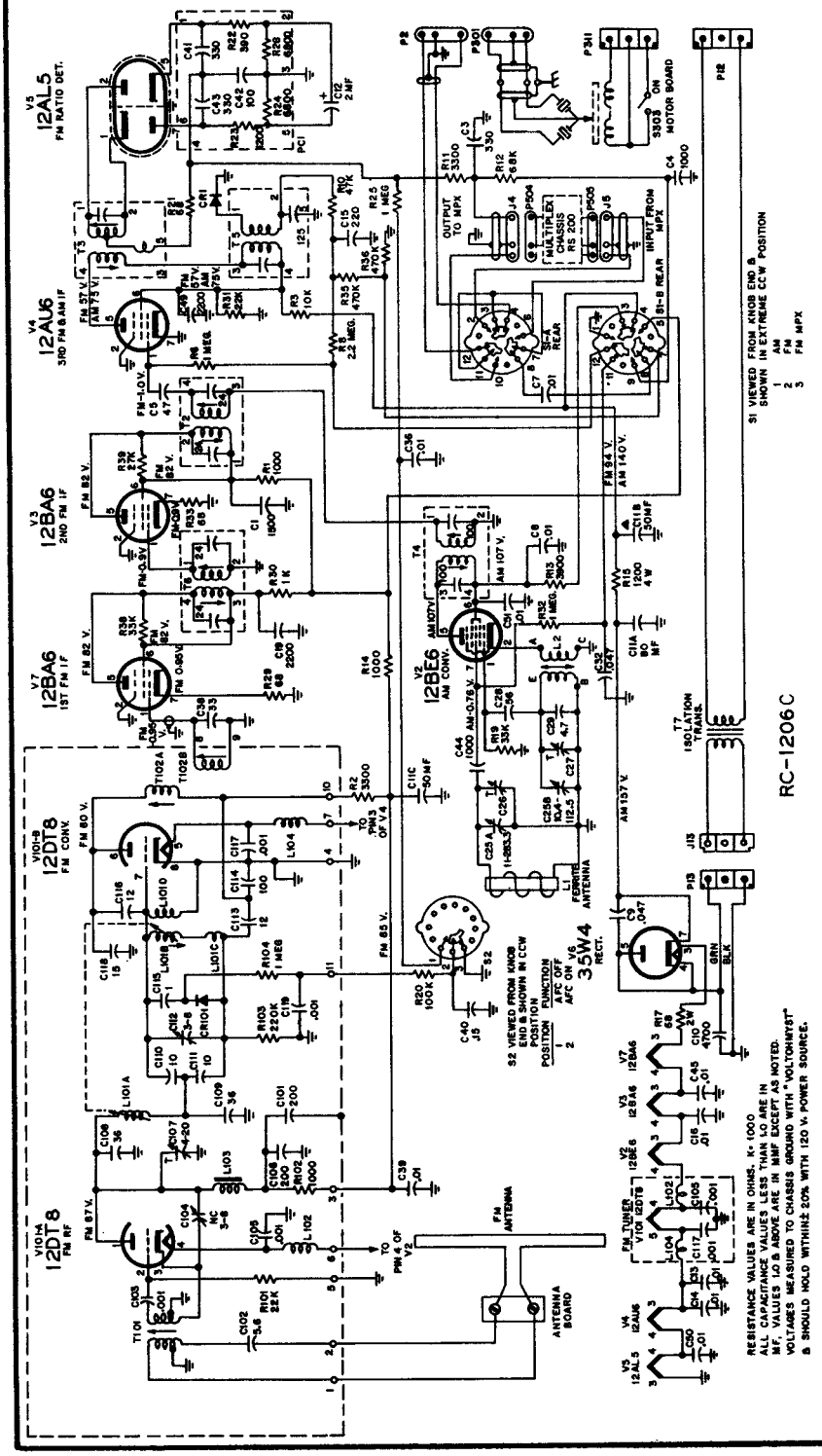

3-VE-0 Series
3-VE-1 Series
3-VE-2 Series
3-VF-0 Series
3-VF-1 Series
3-VF-2 Series
3-VF-1X Series
3-VF-2X Series

Tuner Chassis RC-1206C, F

FM-Stereo Chassis RS-200C

Amplifier Chassis RS-193A, B, D, E, F

MODEL	NAME	STYLING
3-VE-075	*Tenor*	*Contemporary*
3-VE-086	*Soprano*	*Danish*
3-VE-04	*Barcarolle*	*Early American*
3-VE-105	*Bolero*	*Contemporary*
3-VE-106	*Bolero*	*Contemporary*
3-VE-107	*Bolero*	*Contemporary*
3-VE-205	*Largo*	*Contemporary*
3-VE-207	*Largo*	*Contemporary*
3-VE-226	*Humoresque*	*Danish*
3-VE-244	*Tanglewood*	*Early American*
3-VF-065	*Baritone*	*Contemporary*
3-VF-066	*Baritone*	*Contemporary*
3-VF-105	*Bolero*	*Contemporary*
3-VF-105X	*Bolero*	*Contemporary*
3-VF-106	*Bolero*	*Contemporary*
3-VF-106X	*Bolero*	*Contemporary*
3-VF-107	*Bolero*	*Contemporary*
3-VF-107X	*Bolero*	*Contemporary*
3-VF-205	*Largo*	*Contemporary*
3-VF-205X	*Largo*	*Contemporary*
3-VF-207	*Largo*	*Contemporary*
3-VF-207X	*Largo*	*Contemporary*
3-VF-226	*Humoresque*	*Danish*
3-VF-226X	*Humoresque*	*Danish*
3-VF-244	*Tanglewood*	*Early American*
3-VF-244X	*Tanglewood*	*Early American*

(See related material on the next two pages.)

RCA VICTOR

3-VE-0, - 1, - 2 Series
3-VF-0, -1, -1X, -2, -2X Series

(Continued)

RS-200C Schematic Diagram and other Service Information on RC-1206C, F, etc.

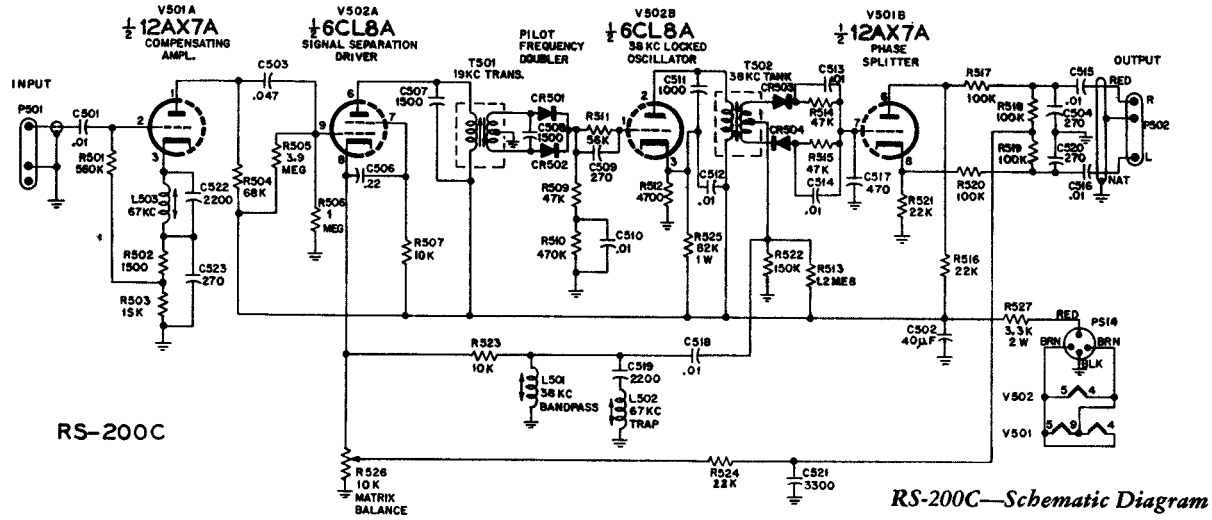

RS-200C—Schematic Diagram

CRITICAL LEAD DRESS

Chassis RC-1206C,F

1. 10.7 mc IF grid and plate wiring must be short and dressed close to chassis.
2. Connect AVC side of AM antenna to top side of tuning gang, and dress clear of 12BE6 and 12BA6 tubes.
3. Dress heater lead which connects to pin 4 of 12BE6 along rear apron and to rear of 12BA6 socket.
4. B+ lead from pin 6 of 12BE6 to T4 must be short and dressed along chassis.
5. All RF bypass capacitor leads must be short and direct.
6. All heater leads must be close to chassis.

Chassis RS-193A, B, D, E, F

1. Dress all heater leads close to chassis and away from all grid connections.
2. Dress all green and white leads against front apron.
3. Dress all leads to pins 6 and 8 of V204(5Y3) close to chassis.
4. Dress all leads from T202 and T203 against back apron.
5. Dress R8 and R17 (3900Ω) close to back apron keeping leads as short as possible.
6. Bend terminal 2 away from terminals 1 and 3 of J211 on RS-193B amplifier.
7. Dress leads away from all power resistors.

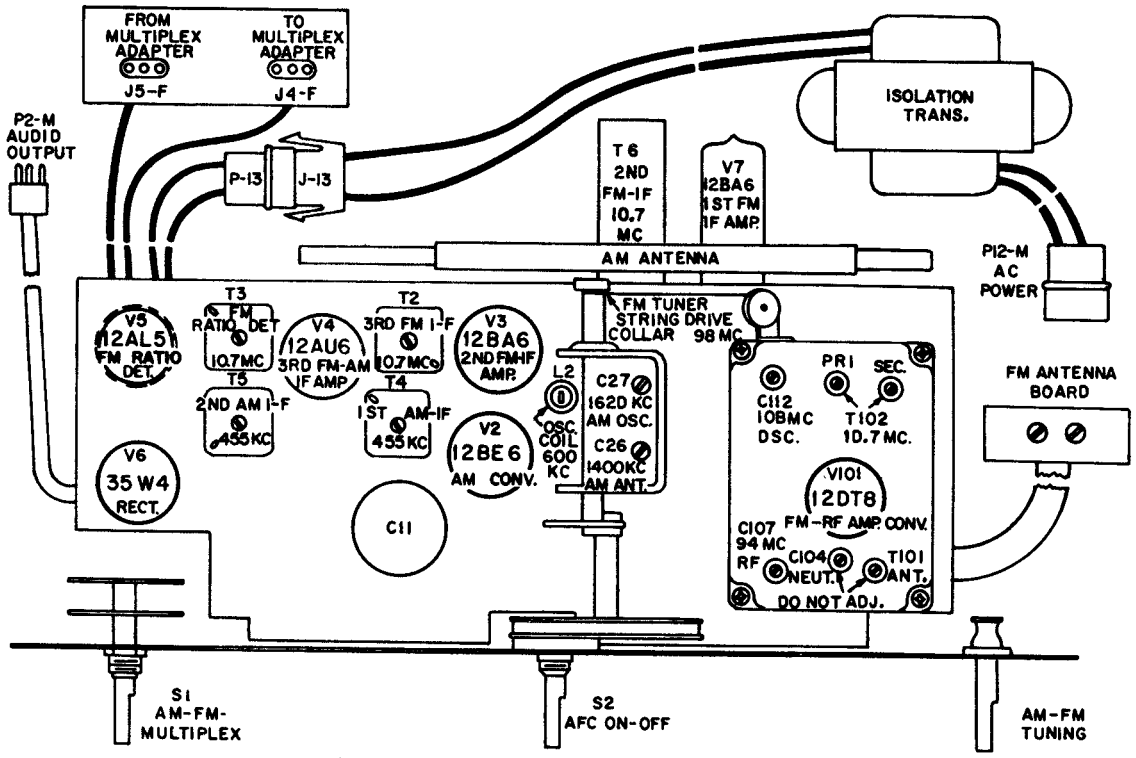

Chassis RC-1206—Location of Major Components

RCA VICTOR

3-VE-0, - 1, - 2 Series
3-VF-0, -1, -1X, -2, -2X Series

(Continued)

Circuit Diagrams of RS-193A, B, D, E, F, Amplifier Chassis

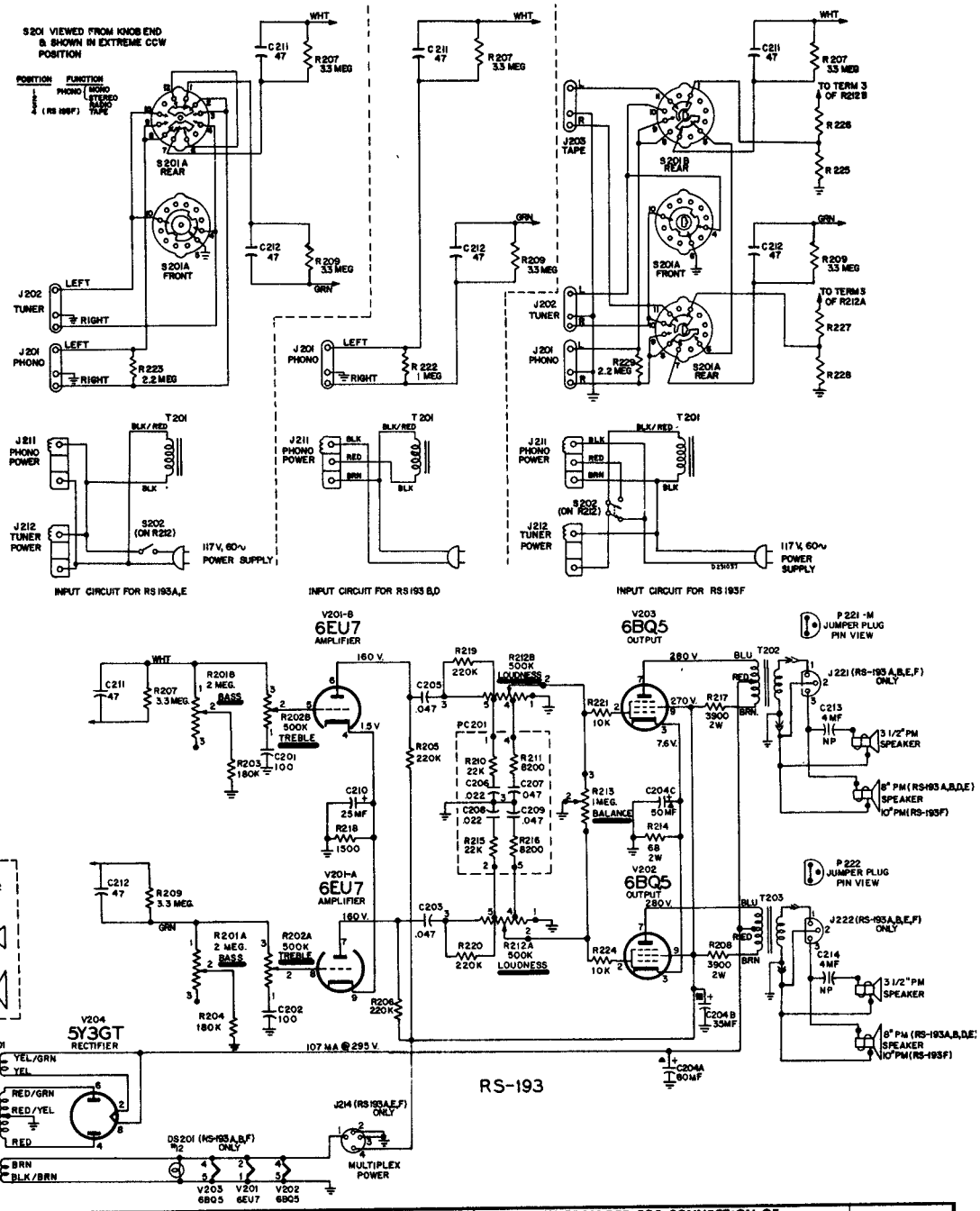

MODEL SERIES	TUNER CHASSIS	FM-STEREO CHASSIS	RECORD CHANGER	AMPLIFIER CHASSIS	JACKS PROVIDED FOR CONNECTION OF— TUNER	TAPE	"TOTAL SOUND" SPKRS.	FM-STEREO	PILOT LAMP
3-VE-0	.....	.....	RP-216B-2	RS-193D	.....	.....	.....	.....	.....
3-VE-1	.....	.....	RP-216B-2	RS-193B	.....	.....	Yes	.....	Yes
3-VE-2	.....	.....	RP-216B-1	RS-193F	Yes	Yes	Yes	.....	Yes
3-VF-06	RC-1206F	RS-200C	RP-216B-2	RS-193E	Equpd.	.....	Yes	Equpd.	.....
3-VF-1	RC-1206C,F	.....	RP-216B-2	RS-193A	Equpd.	.....	Yes	Yes	Yes
3-VF-1X	RC-1206F	RS-200C	RP-216B-2	RS-193A	Equpd.	.....	Yes	Equpd.	Yes
3-VF-2	RC-1206C,F	.....	RP-216B-1	RS-193F	Equpd.	Yes	Yes	Yes	Yes
3-VF-2X	RC-1206F	RS-200C	RP-216B-1	RS-193F	Equpd.	Yes	Yes	Equpd.	Yes

RCA VICTOR

3RH1 Series, Model 3RH10; 3RH2 Series, Models 3RH21, 3RH22, Chassis RC-1199D; and 3RH3 Series, Models 3RH31, 3RH32, 3RH34, Chassis RC-1204E, -F, -J.

(See next page adjacent at right for alignment and other service data)

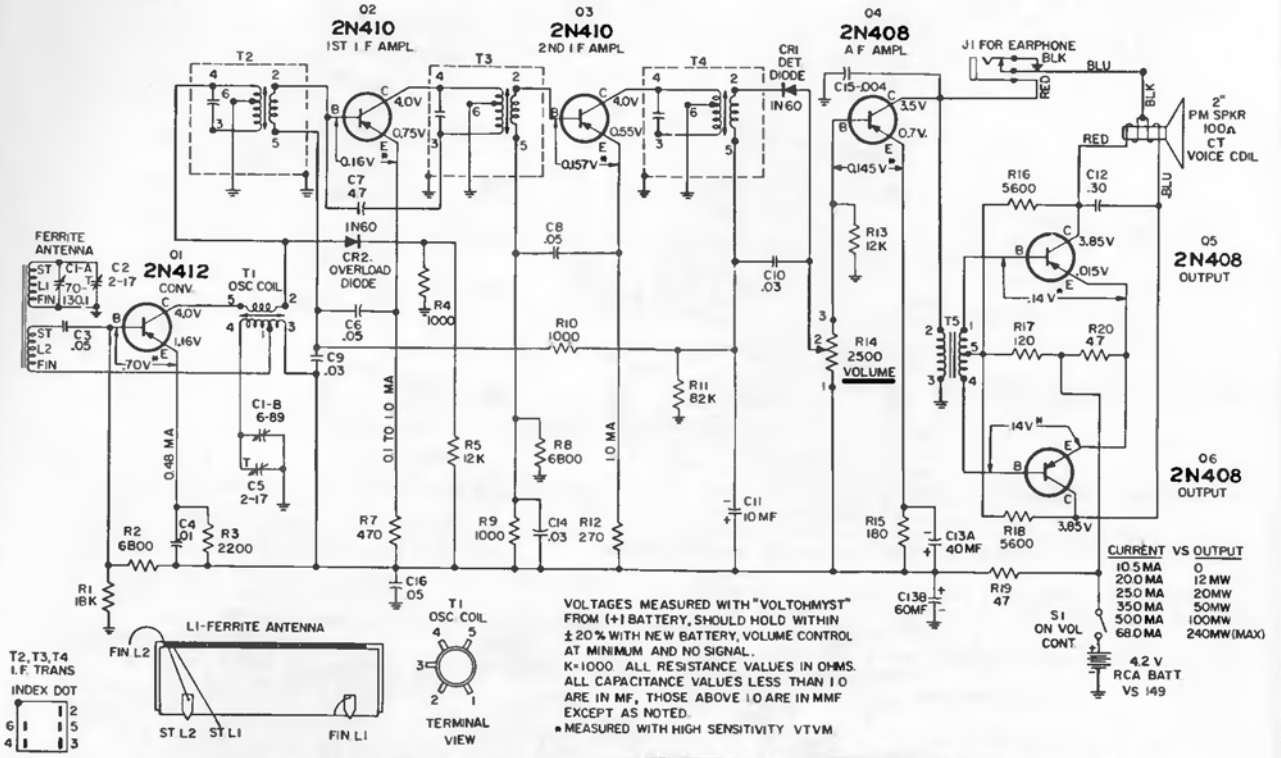

Instruments of the 3-RH-1 Series, the 3-RH-2 Series, and the 3-RH-3 Series are small pocket style transistorized radio receivers housed in a two-piece non-breakable "Impac" case. The letter "G" following a model number indicates a gift pack consisting of a carrying case, a battery, an earphone and the transistor radio contained in a gift box.

The 3-RH-1 Series and the 3-RH-2 Series instruments are direct tuned by means of a large knob on the front of the case. Case appearance is the only difference between the 3-RH-1 and the 3-RH-2 Series.

Instruments of the 3-RH-3 Series feature gear-driven vernier tuning with the tuning knob at the edge of the case. The dial pointer is covered by a transpareni plastic window.

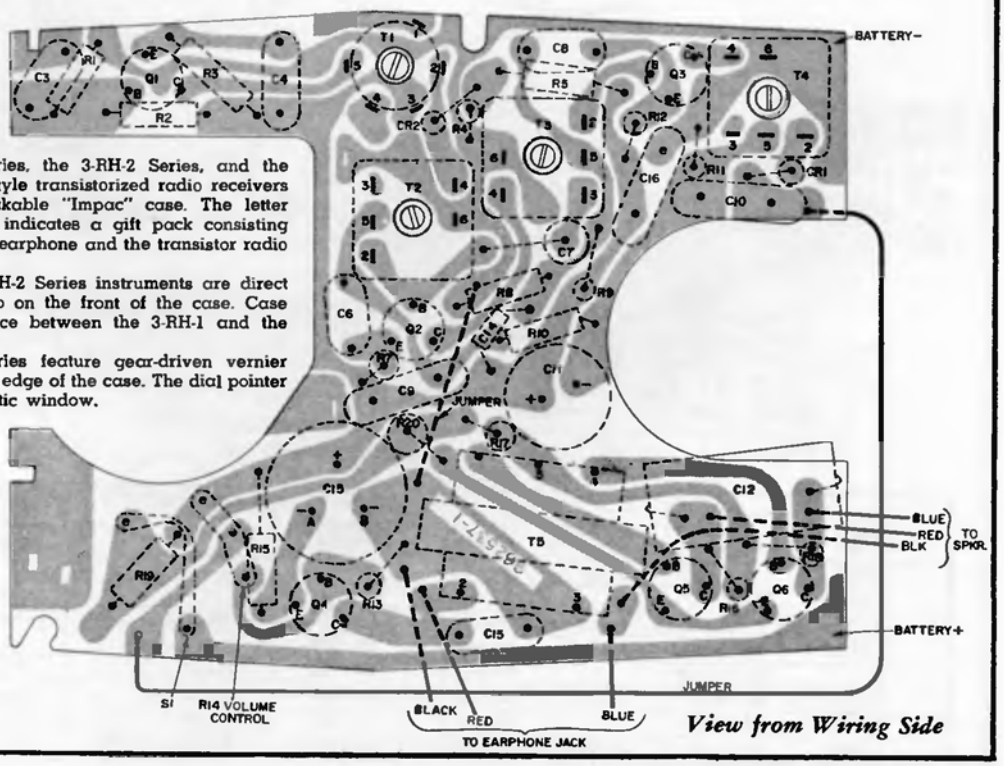

View from Wiring Side

RCA VICTOR

3RH1 Series, Model 3RH10, 3RH2 Series, Models 3RH21, 3RH22, Chassis RC-1199D, 3RH3 Series, Models 3RH31, 3RH32, 3RH34, Chassis RC-1204E, -F, -J, Continued

(See page adjacent at left for circuit diagram and other service data)

CHASSIS REMOVAL

1. Unsolder the battery spring contacts from the circuit board. DO NOT ATTEMPT TO REMOVE CONTACTS FROM CASE. The battery contacts are heat sealed to the plastic case front.
2. Pull the dial knob off of tuning condenser shaft (3-RH-1, -2 only).
3. Remove the knurled nut holding the earphone jack to the case.
4. Remove the two screws holding the circuit board to the case.
5. Lift up on battery end of chassis. (This will pull tuning capacitor out of dial pointer in 3-RH-3.) Chassis may then be slid out of case.
6. If necessary to separate chassis and speaker, unsolder speaker leads from wiring side of board. AVOID UNSOLDERING LEADS AT SPEAKER TERMINALS SINCE EXCESSIVE HEAT WILL DAMAGE VOICE COIL LEADS.

When reassembling 3-RH-1, -2 Series reverse the above procedure. When reassembling 3-RH-3 Series, the dial window must first be removed. The above procedure is then followed. Finally the dial pointer is placed on the tuning gang shaft and the dial window reinstalled.

CRITICAL LEAD DRESS

1. Dress lead from diode to volume control between speaker magnet and top of battery.
2. Keep leads to earphone jack as short as possible.
3. Dress leads from output transistors to speaker towards the edge of the board (away from speaker pot) so as to provide sufficient room for 0.3 mf capacitor.

ALIGNMENT PROCEDURE

For all alignment operations, connect the low side of the signal generator to the "common negative" wiring and keep the generator output as low as possible to avoid AVC action.

Connect output meter across voice coil. Clip onto extreme ends of speaker terminals only, to avoid damage to voice coil leads.

Step	Connect High Side of Signal Generator to—	Signal Gen. Output	Dial Pointer Setting	Adjust for Max. Output
1	Antenna gang stator CIA thru .01 mf capacitor	455 kc	Gang fully open	T4 (3rd I-F)
2				T3 (2nd I-F)
3				T2 (1st I-F)
4	Repeat Steps 1, 2, and 3			
5	Short wire placed near antenna for radiated signal	1620 kc	Gang fully open	Oscillator trimmer C5
6		1400 kc	1400 kc (rock gang if necessary)	Antenna trimmer C2
7		600 kc	600 kc (rock gang)	TI osc. coil
8	Repeat Steps 5, 6, and 7.			

USE PROPER ALIGNMENT TOOL FOR MAKING ADJUSTMENTS. CORES ARE EASILY BROKEN BY IMPROPER HANDLING. MAKING NECESSARY REPLACEMENT OF ENTIRE COIL OR TRANSFORMER.

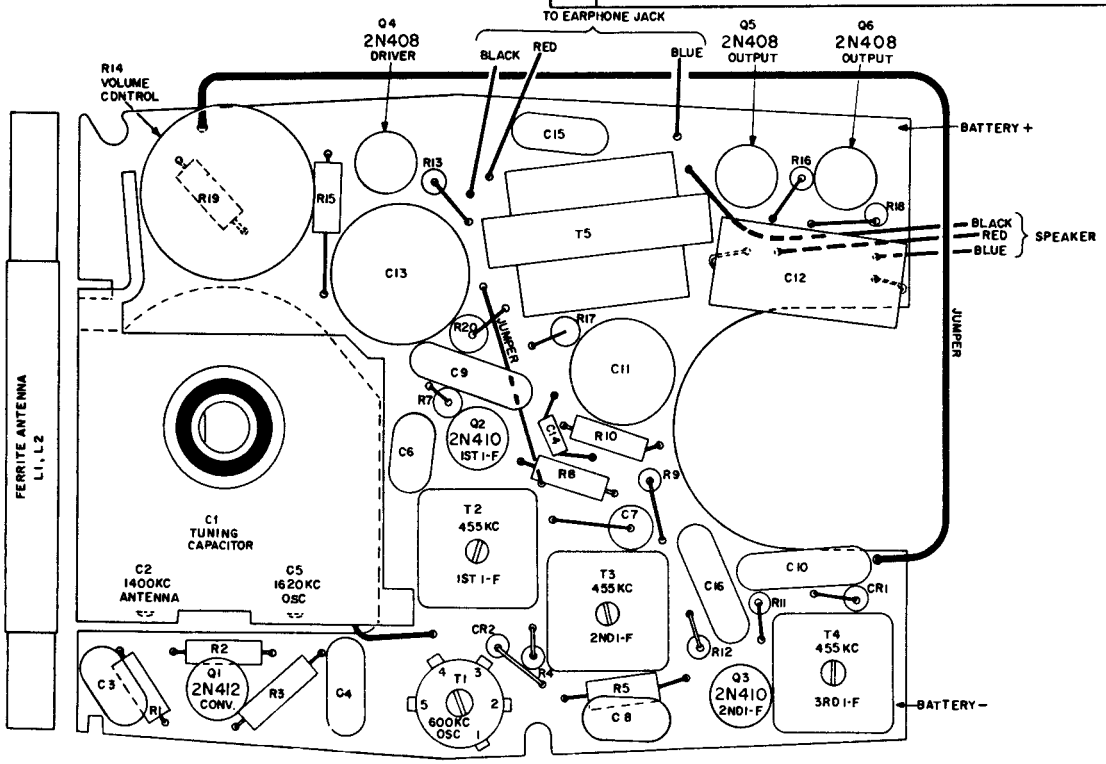

Chassis Layout—View from Component Side

RCA VICTOR

3RG1 Series, Model 3RG14, Chassis RC-1208C;
3RG3 Series, Models 3RG31, 3RG32, 3RG33, 3RG34, Chassis RC-1208D;
3RG6 Series, Models 3RG61, 3RG64, Chassis RC-1208H.

(Continued on the next page adjacent at right where circuit diagrams are shown)

DESCRIPTION

Instruments of the 3-RG-1 Series and the 3-RG-3 Series are pocket style radio receivers which use Chassis RC-1208C (3-RG-1 Series) and RC-1208D (3-RG-3 Series). Both series are housed in vertically styled "Impac" cases which are similar in appearance.

A two-section printed wiring board is used. One section contains the battery clips and the speaker clips (an earphone jack and one capacitor are also on this section in the RC-1208D and RC-1208H Chassis). The second section contains the remaining components. The first section is mounted in the case with the component side down, and the second section is mounted with the component side up.

BATTERY REPLACEMENT

3-RG-1 Series, 3-RG-3 Series

1. Swing easel handle to the front by bringing handle around the bottom of the case. DO NOT FORCE HANDLE AROUND THE TOP AS THIS WILL DAMAGE THE CASE.
2. Insert a coin in the slot on the bottom of the case and twist. This will "snap" the two sections apart.
3. Replace batteries, observing correct polarity.

3-RG-6 Series

1. Unsnap two leather tabs and lift up case back.
2. Replace batteries, observing correct polarity.

EARPHONE CONNECTION

Only a high impedance earphone (2000 ohms) should be connected into the earphone jack. RCA accessory earphone Number RK-299 is recommended.

ALIGNMENT PROCEDURE

For all alignment operations, connect the low side of the signal generator to the "common negative" wiring and keep the oscillator output as low as possible to avoid AVC action.

Connect output meter across voice coil. Set volume control at maximum.

USE PROPER ALIGNMENT TOOL FOR MAKING ADJUSTMENTS. CORES ARE EASILY BROKEN BY USE OF AN IMPROPER TOOL, MAKING REPLACEMENT OF ENTIRE COIL OR TRANSFORMER NECESSARY.

Step	Connect High Side of Signal Gen. to—	Signal Gen. Output	Dial Pointer Setting	Adjust for Max. Output
1	Antenna gang stator thru .01 mf capacitor	455 kc	Gang fully open	T4 (3rd I-F)
2				T3 (2nd I-F)
3				T2 (1st I-F)
4	Repeat Steps 1, 2, and 3.			
5	Short wire placed near antenna for radiated signal	1620 kc	Gang fully open	Oscillator trimmer C5
6		1400 kc	1400 kc (rock gang if necessary)	Antenna trimmer C2
7		600 kc	600 kc (rock gang)	T1 osc. coil
8	Repeat Steps 5, 6, and 7.			

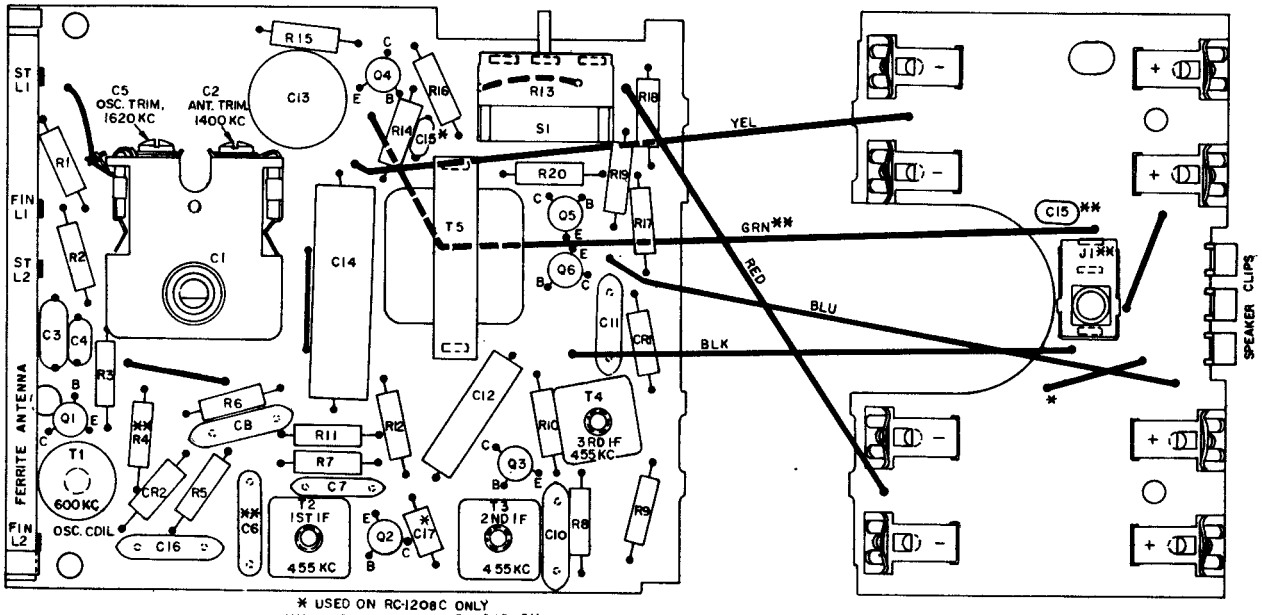

Chassis Layout—View from Component Side (Removed from Case)

RCA VICTOR

3-RG-1 Series, 3-RG-3 Series, 3-RG-6 Series

(Continued from preceding page)

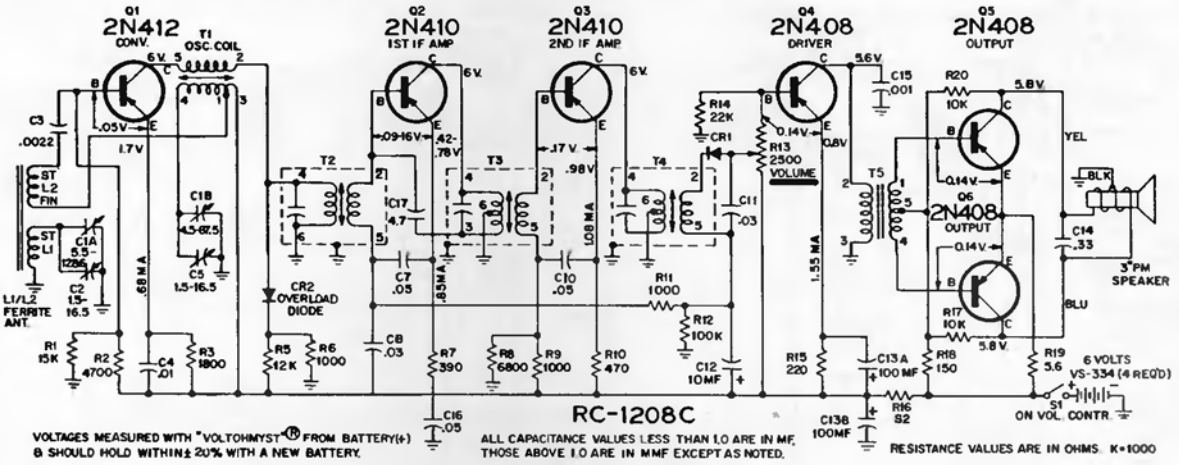

Schematic Diagram—3-RG-1 Series

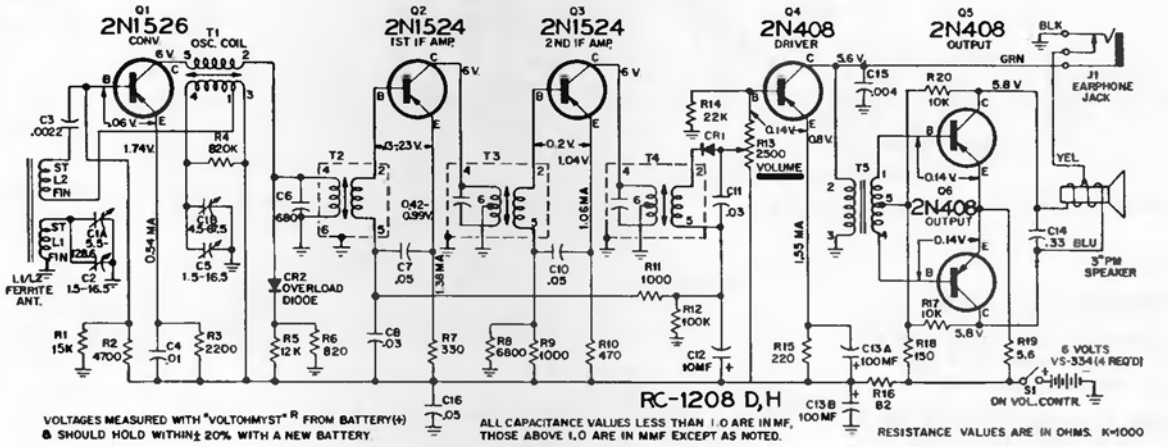

Schematic Diagram—3-RG-3 Series and 3-RG-6 Series

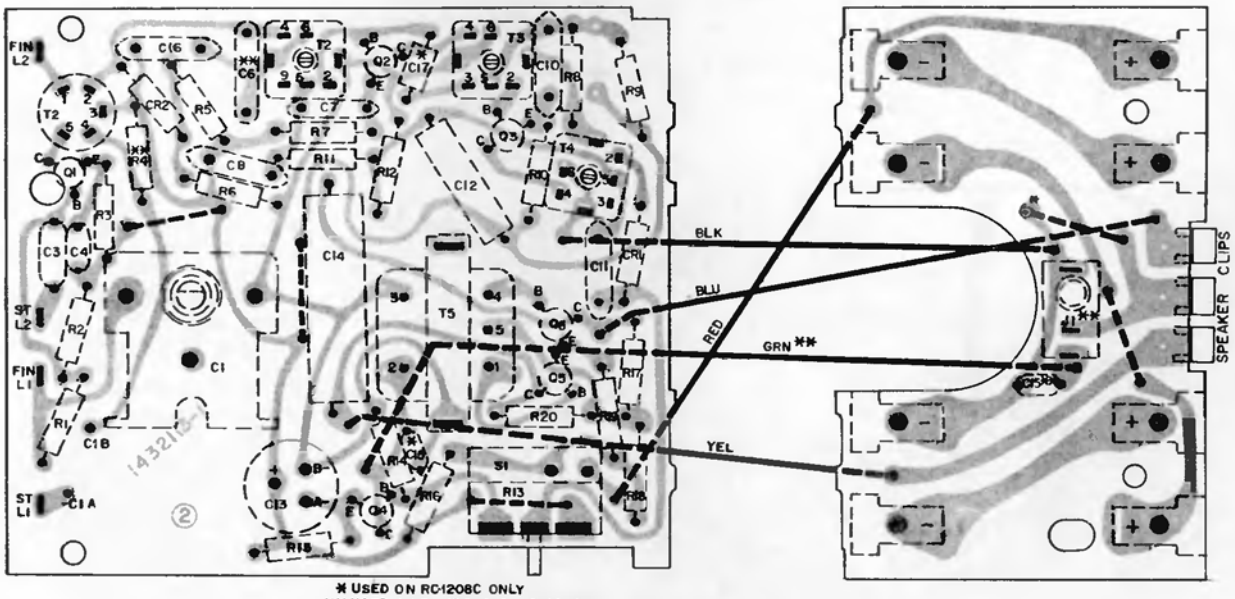

* USED ON RC-1208C ONLY
** USED ON RC-1208D & RC-1208H

Chassis Wiring and Components—View from Wiring Side (Removed from Case)

RCA VICTOR

3RC4, 3RC5, 3RC7 Series, Chassis RC-1209A, -B, -C,
Models 3RC41, 3RC42, 3RC44, 3RC51, & 3RC76.

(Continued on the next page adjacent at right)

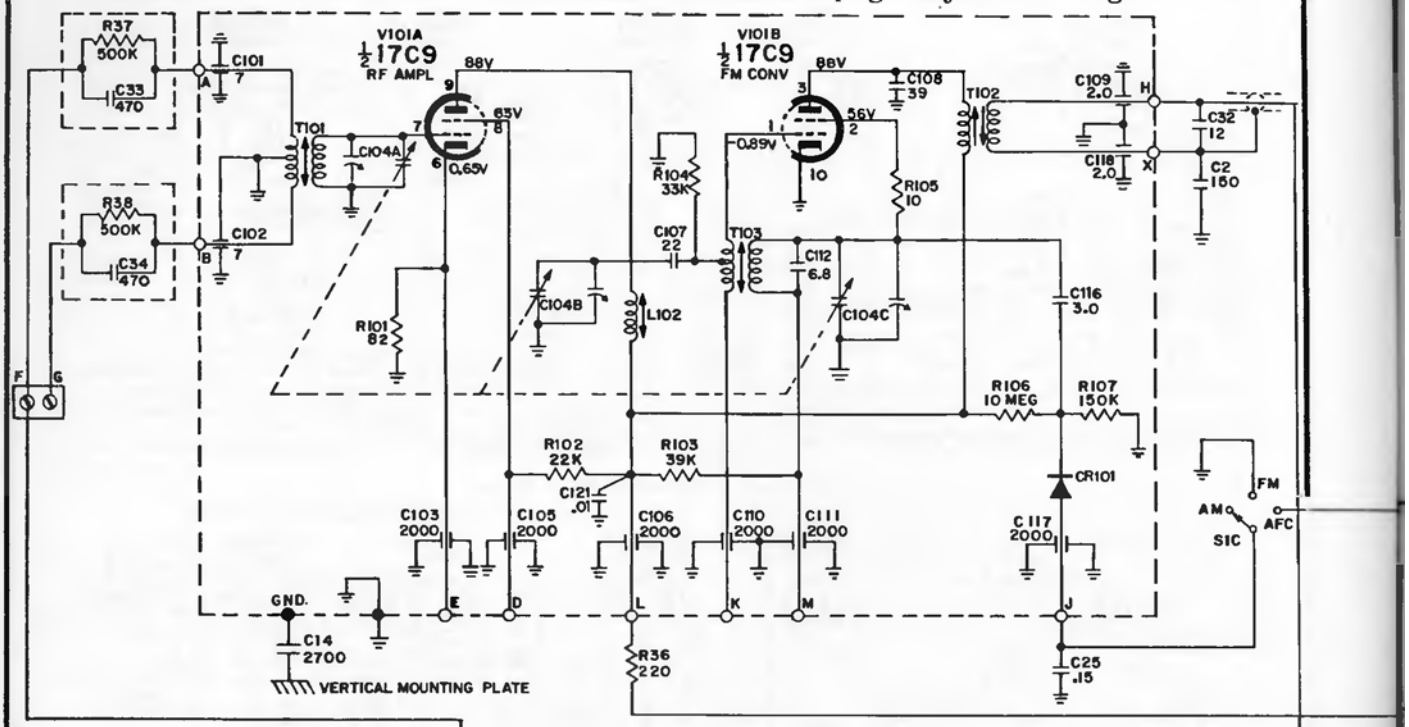

K=1000.

ALL RESISTANCE VALUES IN OHMS.

ALL CAPACITANCE VALUES LESS THAN 1.0 IN µF; VALUES ABOVE 1.0 IN µµF UNLESS OTHERWISE INDICATED.

VOLTAGES MEASURED TO COMMON NEG. (⏚) WITH "VOLTOHMYST" AND SHOULD HOLD WITHIN ±20% WITH 120 VOLT INPUT.

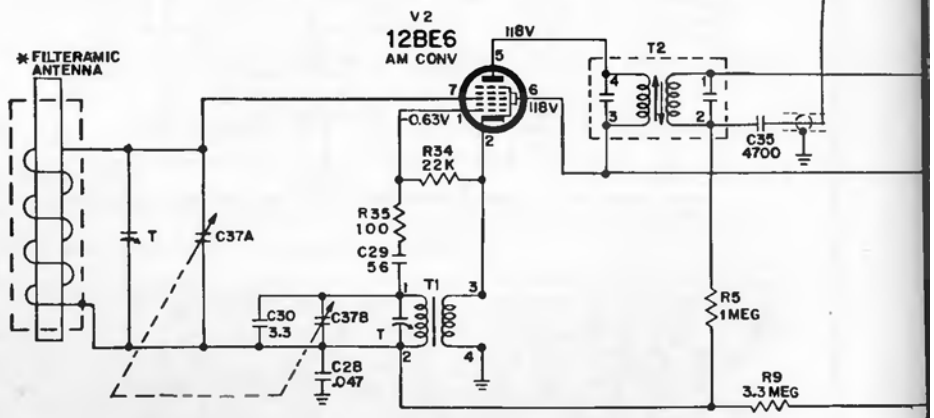

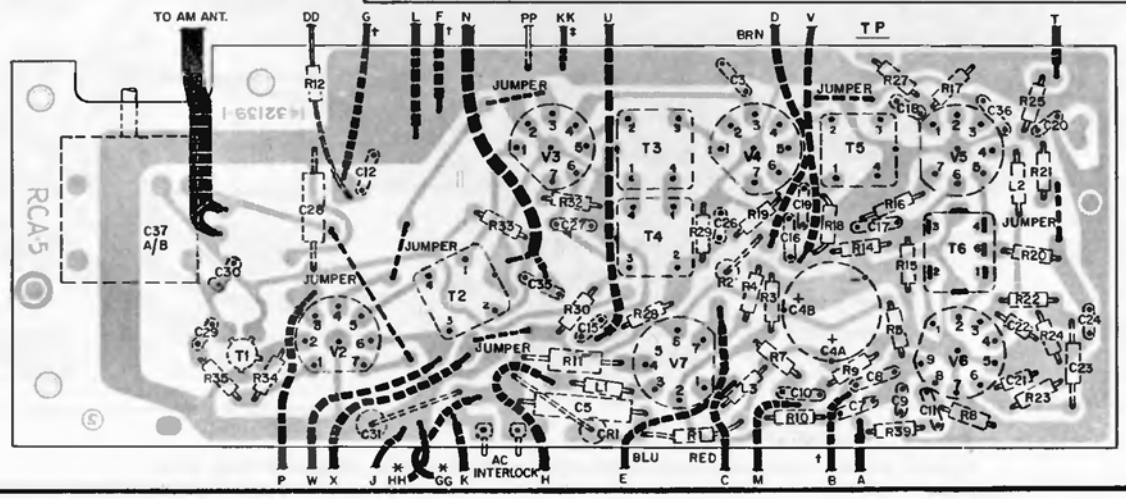

 Chassis Wiring and Components—View from Wiring Side

RCA Victor 3RC4, 3RC4, 3RC7 Series, Chassis RC-1209A, -B, -C, Models 3RC41, 3RC42, 3RC44, 3RC51, 3RC76 (Continued)

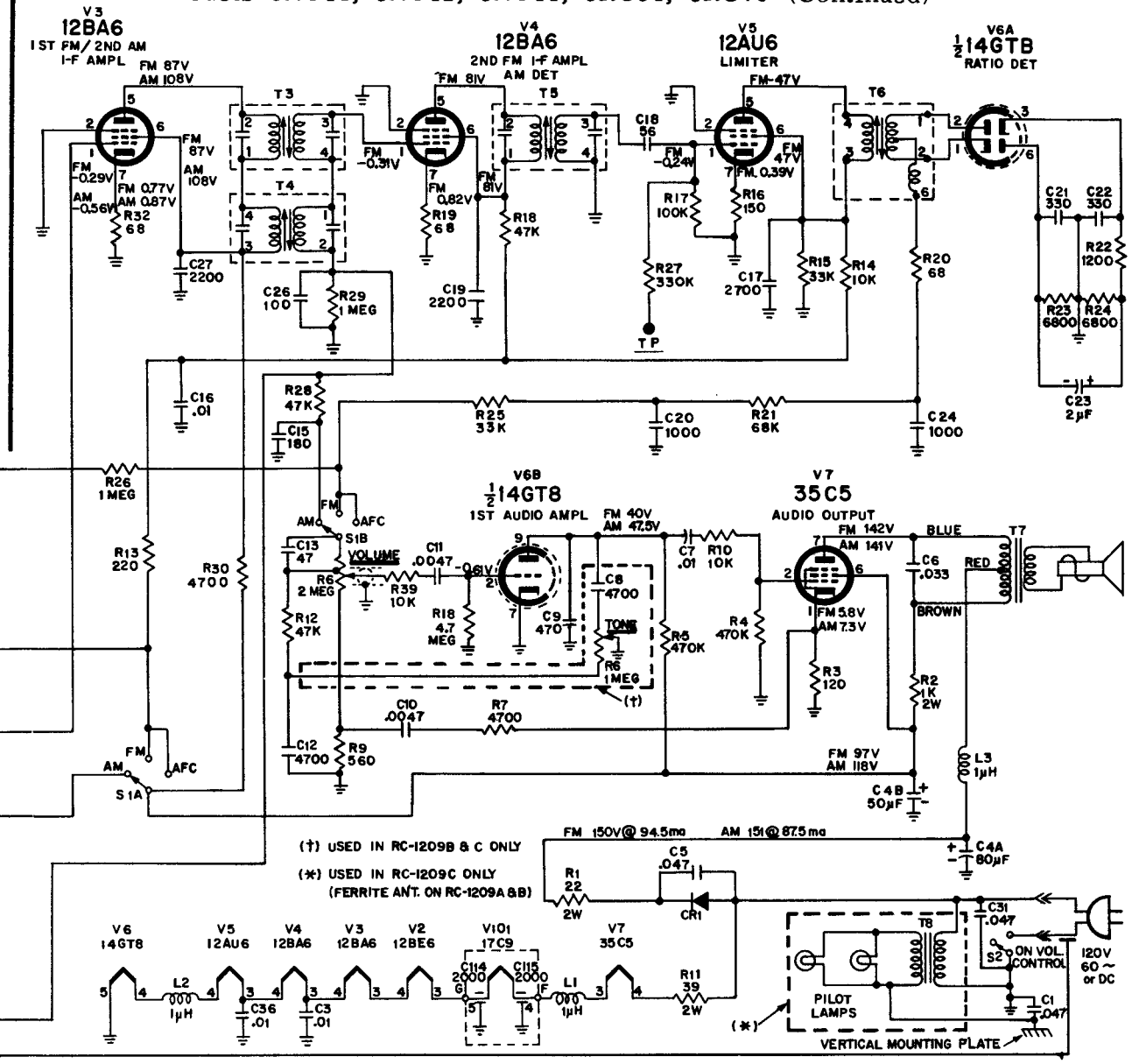

(†) USED IN RC-1209B & C ONLY

(*) USED IN RC-1209C ONLY (FERRITE ANT. ON RC-1209A & B)

FREQUENCY RANGES

	Tuning	IF
AM	530-1620 kc	455 kc
FM	87.5-108.5 mc	10.7 mc

POWER SUPPLY RATING

RC-1209A, B, 105-125V, 50-60 cy. or DC ....36 watts
RC-1209C, 105-125V, 50-60 cycle only .....40 watts

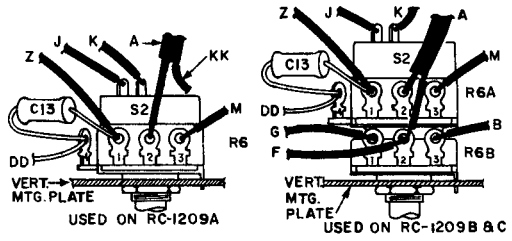

R6 & S2 Wiring

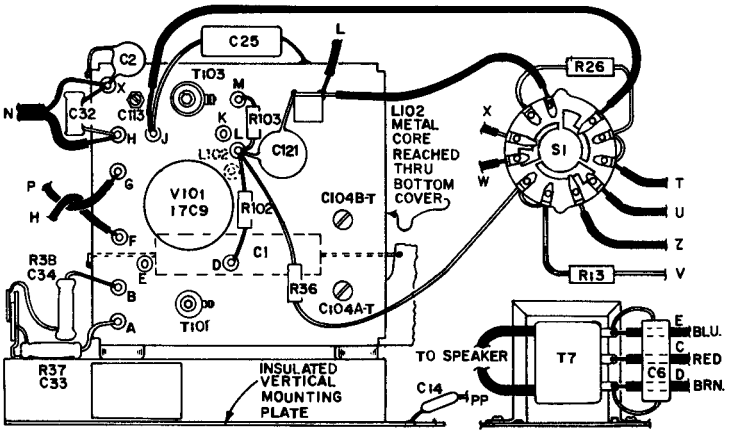

FM Tuner Layout

RCA VICTOR

3RB1 Series, Model 3RB16, Chassis RC-1210A, and
3RB3 Series, Models 3RB31, 3RB32, 3RB34, Chassis RC-1210B

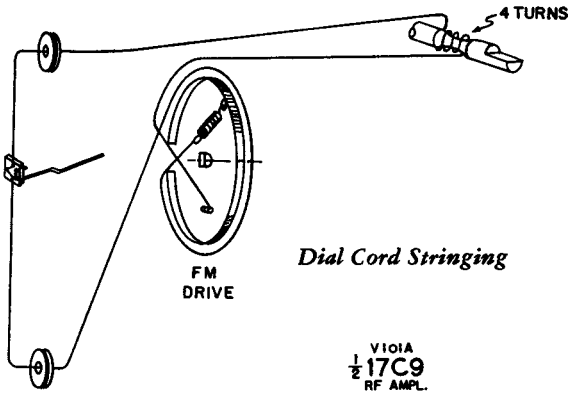

Dial Cord Stringing

Schematic for RC-1210A is shown on this page, and a partial schematic on the next page adjacent at right indicates differences of RC-1210B. Other service material on both pages applies to both groups of sets.

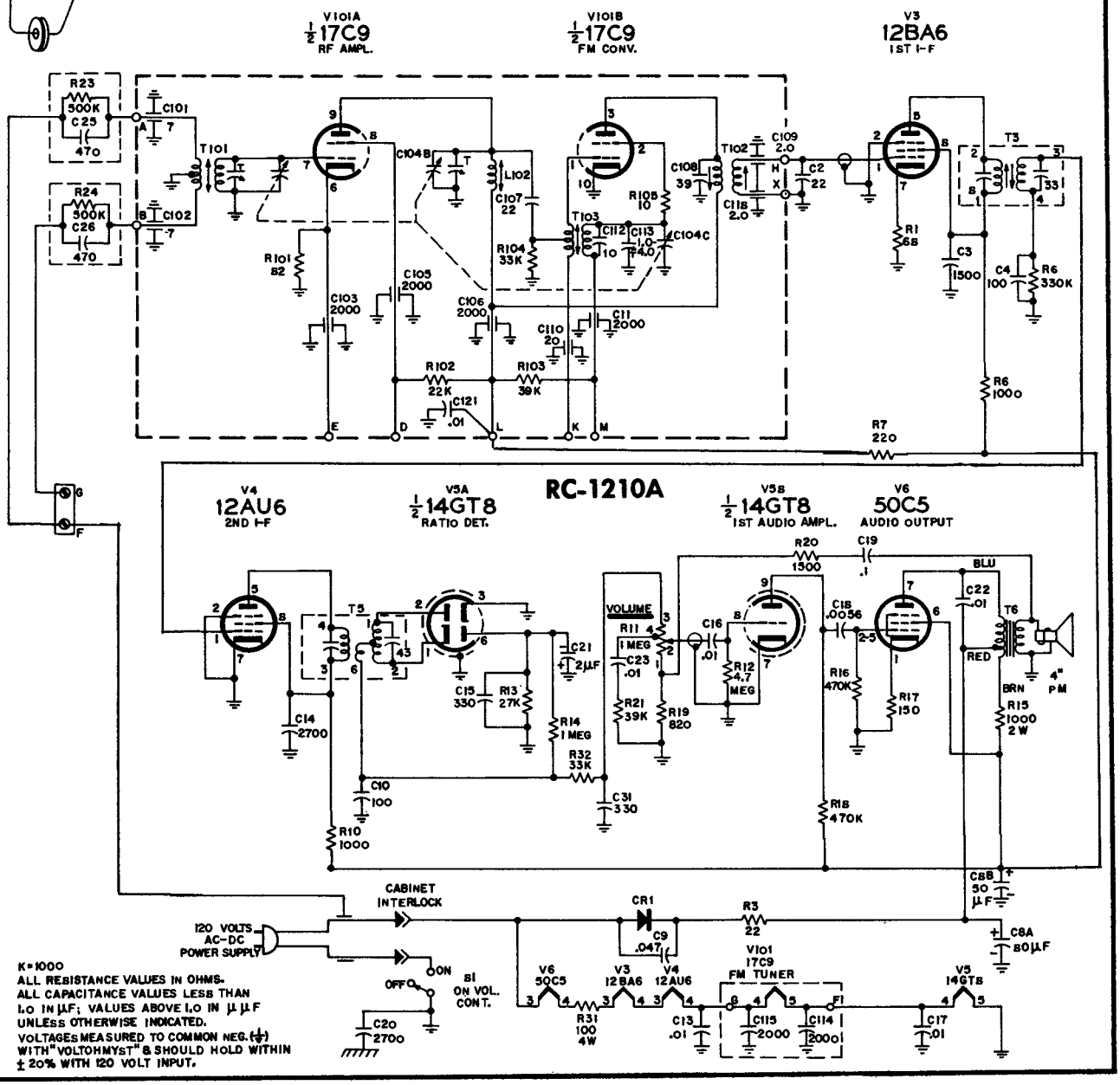

RCA VICTOR

3-RB-1 Series, 3-RB-3 Series (Continued from page at left)

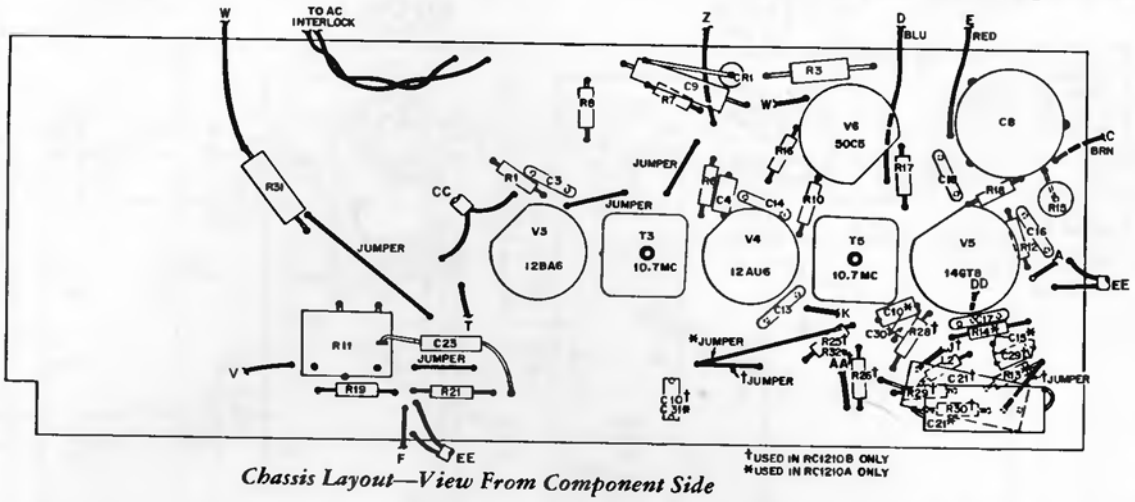

Chassis Layout—View From Component Side

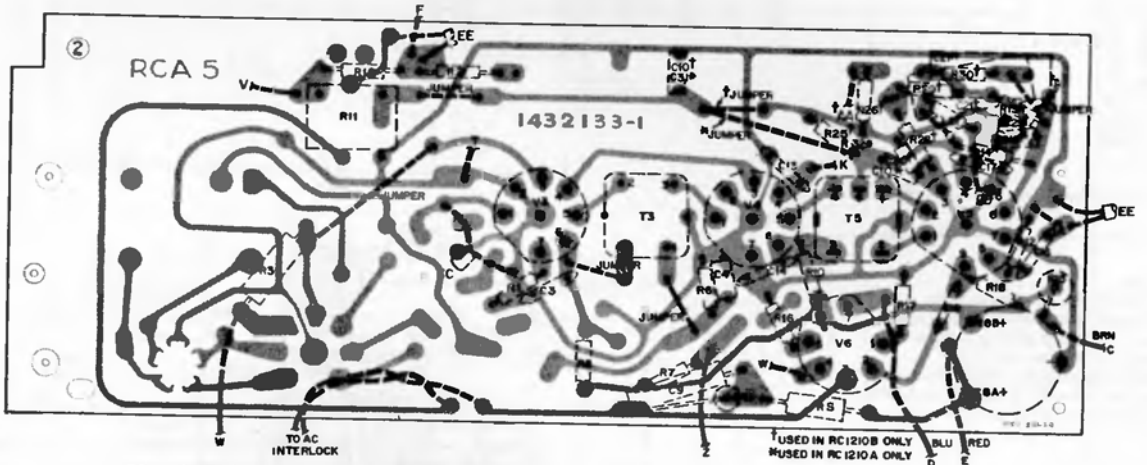

Chassis Wiring and Components—View from Wiring Side

Partial schematic diagram of Chassis RC-1210B, to show differences from RC-1210A

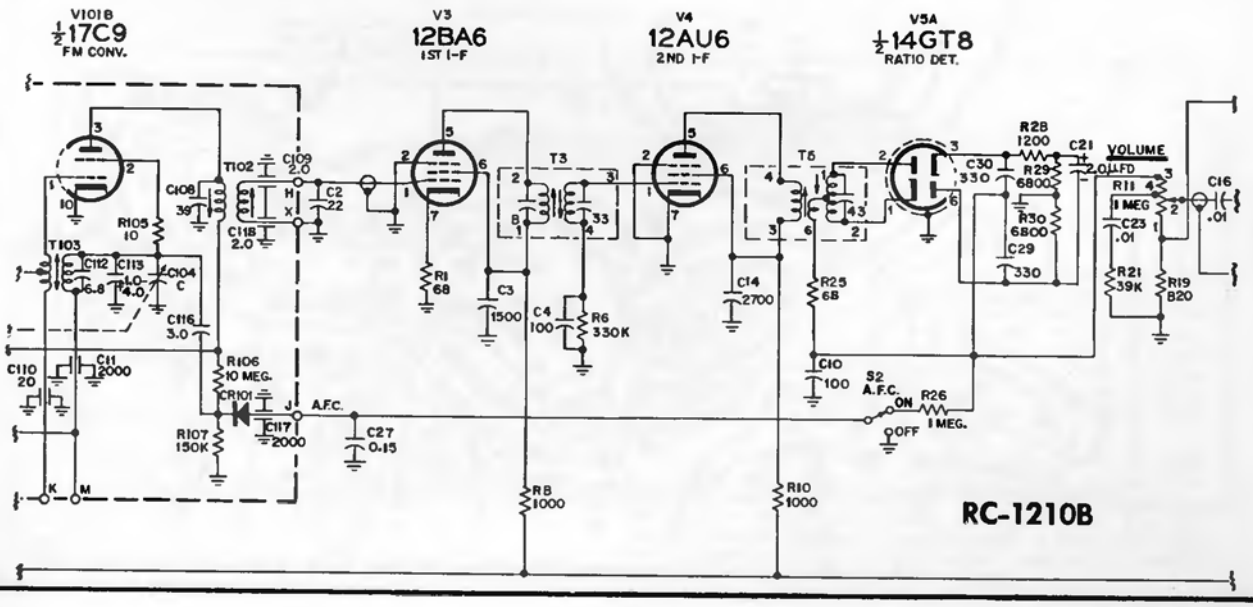

RCA VICTOR

3RC2 Series, Models 3RC21, 3RC24, Chassis RC-1210D

(Continued on next page adjacent at right)

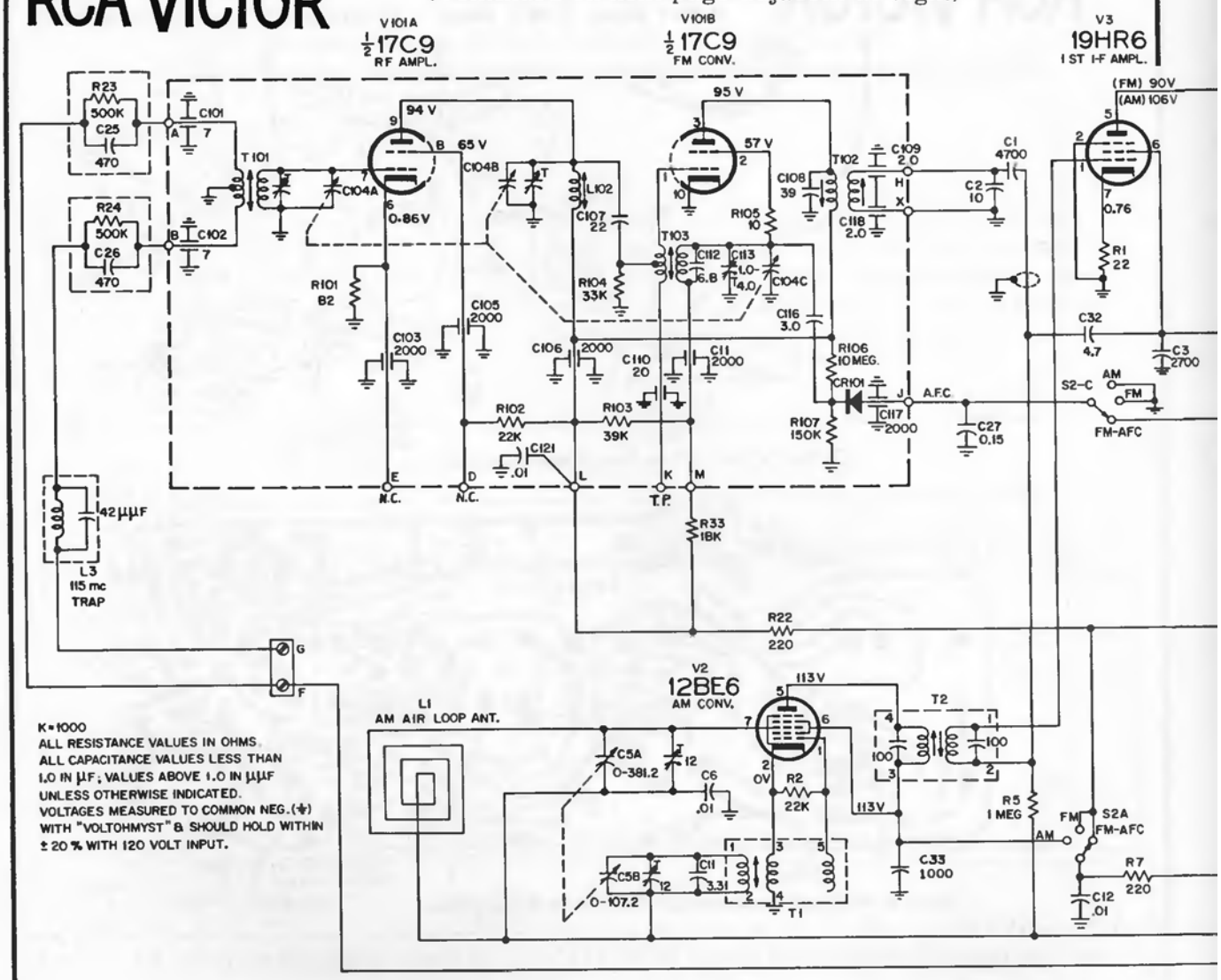

K=1000
ALL RESISTANCE VALUES IN OHMS.
ALL CAPACITANCE VALUES LESS THAN 1.0 IN μF; VALUES ABOVE 1.0 IN μμF UNLESS OTHERWISE INDICATED.
VOLTAGES MEASURED TO COMMON NEG.(⏚) WITH "VOLTOHMYST" & SHOULD HOLD WITHIN ± 20% WITH 120 VOLT INPUT.

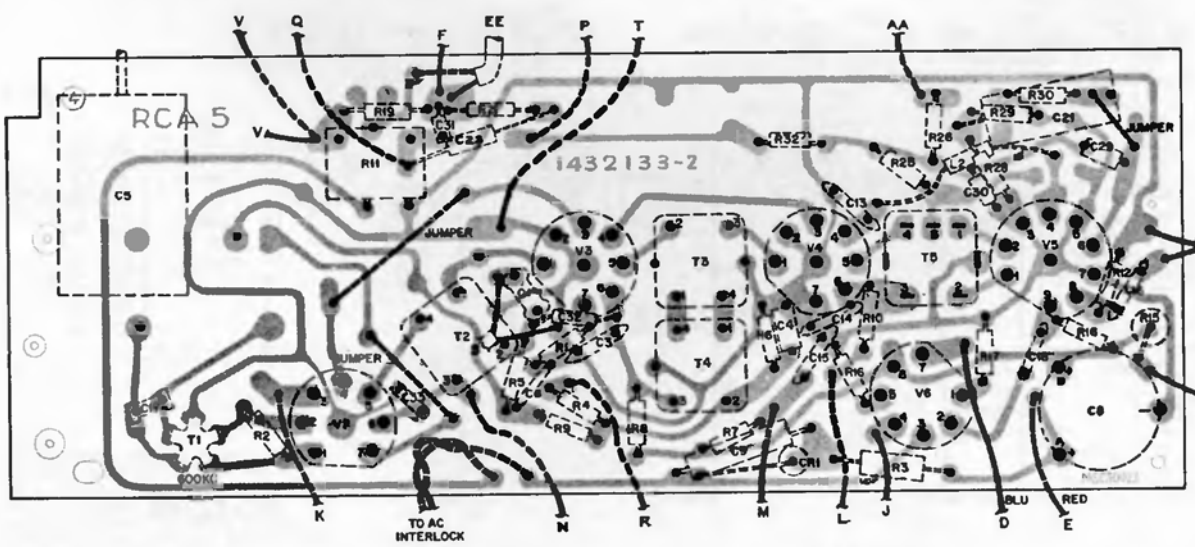

Chassis Wiring and Components—View from Wiring Side

RCA Victor 3RC2 Series, Models 3RC21, 3RC24, Chassis RC-1210D, Continued

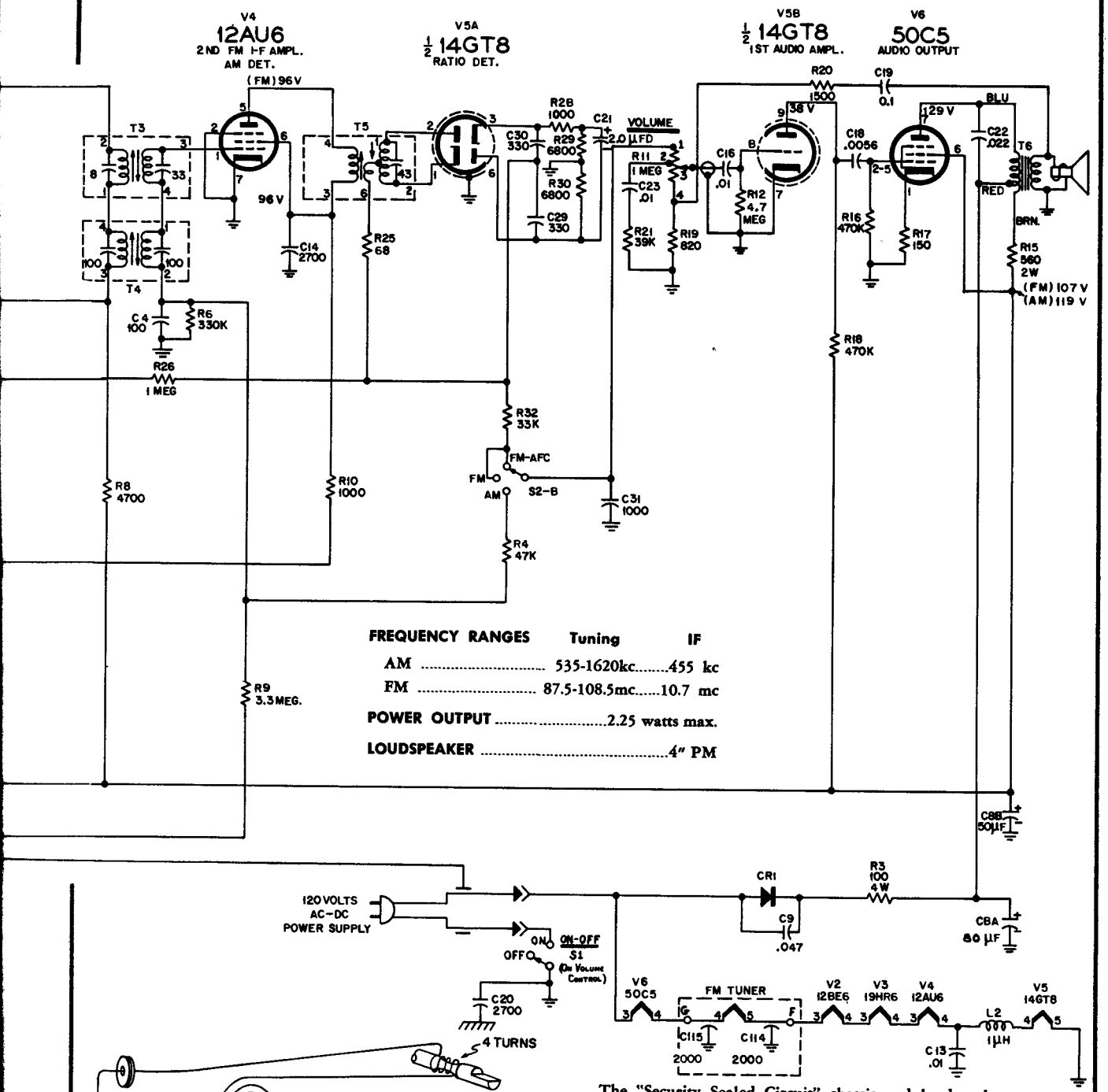

FREQUENCY RANGES	Tuning	IF
AM	535-1620kc	455 kc
FM	87.5-108.5mc	10.7 mc

POWER OUTPUT ..... 2.25 watts max.

LOUDSPEAKER ..... 4" PM

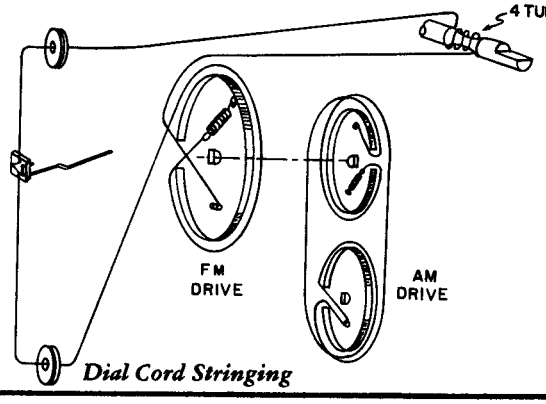

Dial Cord Stringing

The "Security Sealed Circuit" chassis and londspeaker are mounted in a one piece molded plastic cabinet with a "snap-in" hardboard back cover to which is attached the FM antenna terminals, the AM antenna, and the power cnrd interlock plug. When the cabinet back is removed to expose the chassis, the power cord interlock removes power from the chassis; this in conjunction with the isolated control shafts, dial pointer and chassis mounting screens, removes the shock hazard.

Chassis RC-1210D utilizes superhetrodyne circuitry in both the AM and FM channels. The AM circuitry consists of a converter stage, an IF amplifier stage, a detector stage, an AF amplifier stage and a power amplifier stage. The FM circuitry consists of an RF amplifier stage, a converter stage, two IF amplifier stages, a demodulator stage, an AF amplifier stage and a power amplifier stage.

RCA VICTOR

3RC1 Series,
Models 3RC11, 3RC14,
Chassis RC-1210C

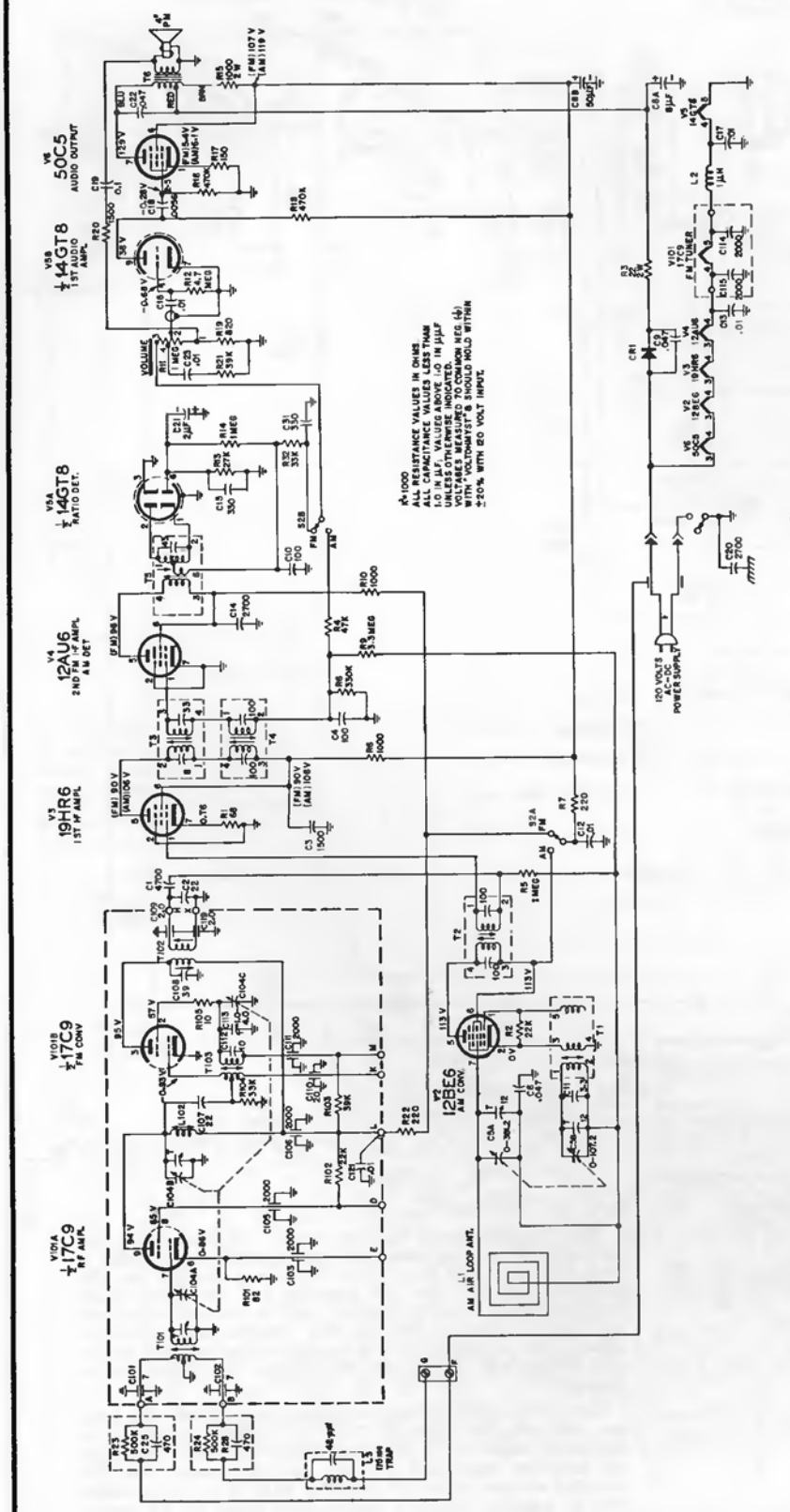

Chassis Wiring and Components—View from Wiring Side

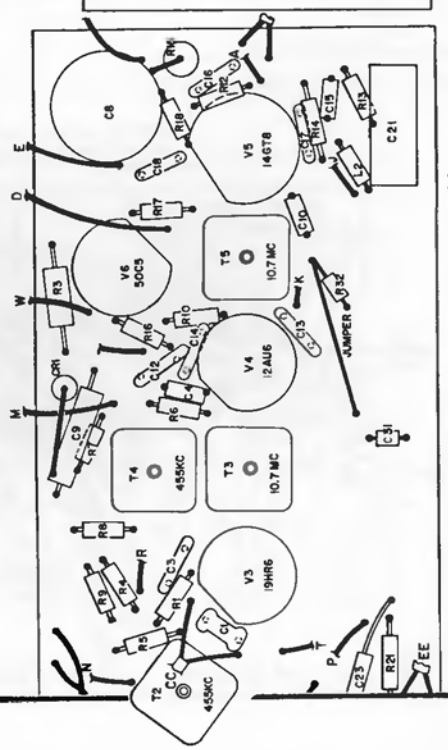

Chassis Layout—View From Component Side

RCA VICTOR

3-RG-8 Series—*The "Globe Trotter"*

Model 3-RG-81—*Chrome/Black*

Chassis No. RC-1212

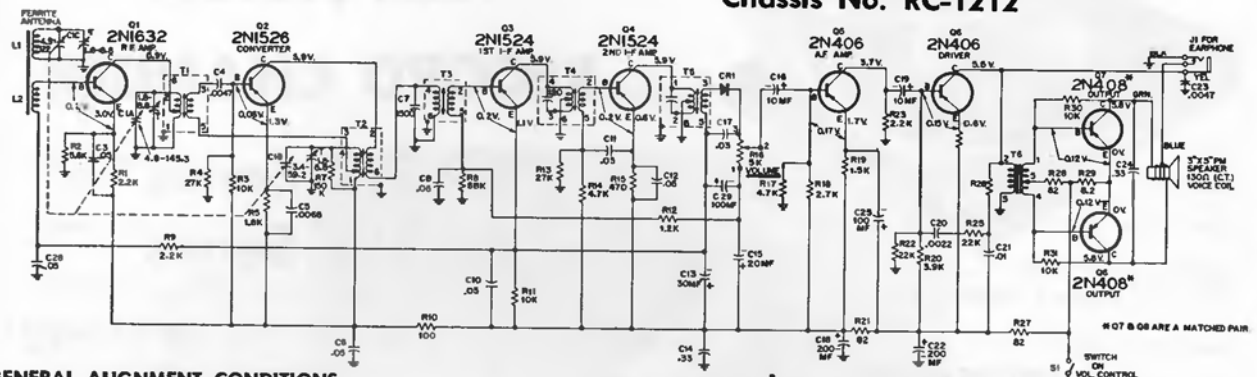

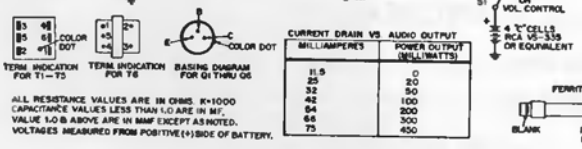

CURRENT DRAIN VS AUDIO OUTPUT

MILLIAMPERES	POWER OUTPUT (MILLIWATTS)
11.5	0
25	20
32	50
42	100
54	200
66	300
75	400

GENERAL ALIGNMENT CONDITIONS

1. Connect output indicator across speaker voice coil.
2. Connect low side of signal source to common ground. (battery negative)
3. Signal input should be kept as low as possible to avoid AGC action (Set output indicator to highest sensitivity)
4. Standard modulation is 400 cycles at 30% amplitude.
5. Volume control should be turned to maximum.

NOTE: CHASSIS MUST BE MOUNTED TO FRONT PANEL WHEN BEING ALIGNED.

Step	Connect Signal Source To—	Set Signal Source To—	Set Radio Dial To—	Adjust— for maximum
1	Stator of C1A (RF gang) through a 0.01 μf capacitor	455 kc	gang fully open	T5 (3rd IF)
2				T4 (2nd IF)
3				T3 (1st IF)
4	Standard Loop or short wire placed near antenna	1620 kc	1620 kc (gang open)	C1B-T (Osc. Trimmer)
5		1400 kc	1400 kc	C1A-T (RF Trimmer)
6				C1C-T (Ant. Trimmer)
7		600 kc	600 kc (rock gang)	T2 (Osc. Coil)
8				T1 (RF Coil)
9	Repeat above steps as necessary for best sensitivity.			

BATTERY REPLACEMENT

1. Insert a coin in slot located in center of back near bottom, (top of battery compartment cover) and twist. Cover will "snap" out.
2. Replace batteries, observing correct polarity.
3. To replace cover, position the three lugs at the bottom of the cover in the three small slots in the bottom of the case. Press downward and inward on top of cover. Cover will "snap" into place.

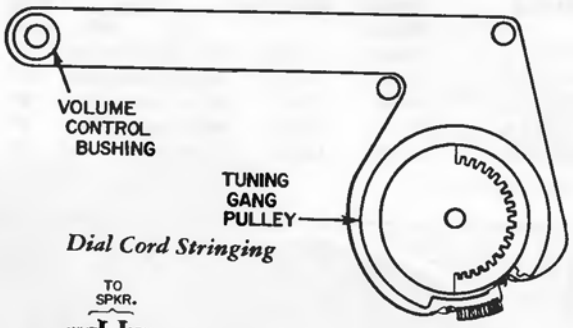

Dial Cord Stringing

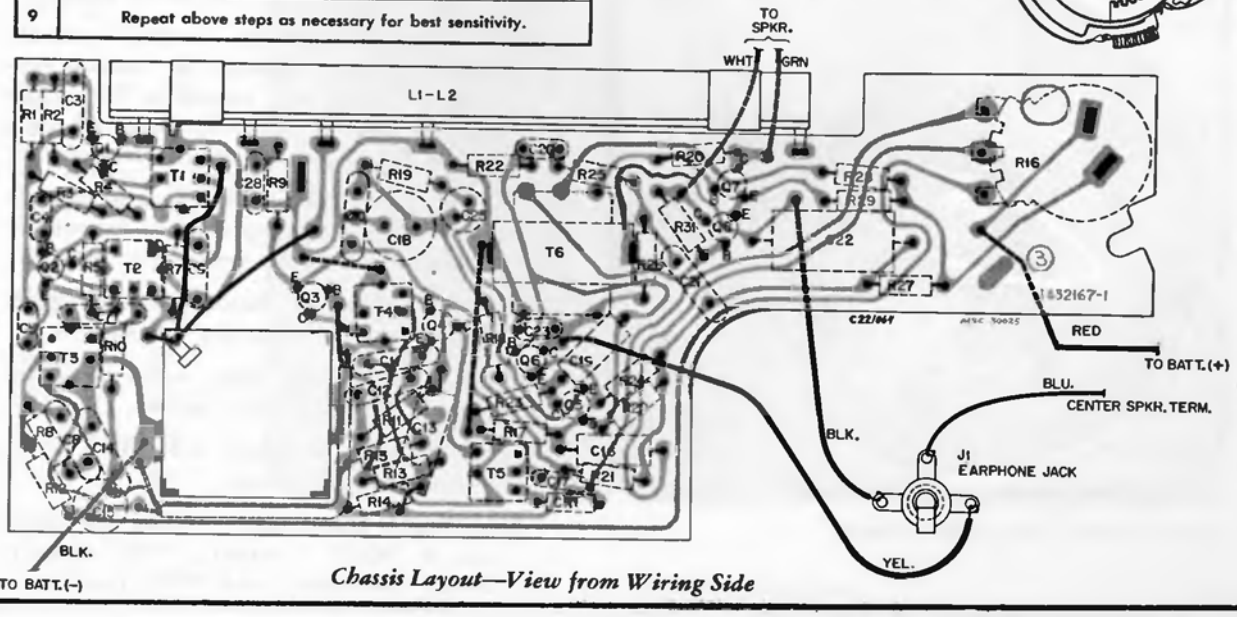

Chassis Layout—View from Wiring Side

Figure 1—Model RP-218-1

RCA VICTOR
RECORD CHANGER
RP-217 Series
RP-218 Series

(Continued below and on the next 17 pages)

SPECIFICATIONS

TURNTABLE SPEED.....16 2/3, 33 1/3, 45, or 78 RPM

RECORD CAPACITY.....Twelve—10 inch (1/4" centerhole)
Ten—12 inch (1/4" centerhole)
Ten—10" and 12" intermixed (1/4" centerhole)
Ten—7", 10" and 12" intermixed (1/4" centerhole)
Twelve—7 inch (1 1/2" centerhole)

1½" CENTERPOST....Not interchangeable with previous models. The Stabilizer arm must be employed when using the 1 1/2" centerpost.

STYLUS FORCE (all models except RP-217-3,4) ..4 to 7 grams

STYLUS FORCE RP-217-3,4 .....9 to 11 grams

POWER REQUIREMENTS.....117 volts, 60 cycles AC, 15 watts

Model	Stereo/ Mono	Cartridge	Stylus 78	Stylus MG	Turntable
RP-217-1	Stereo	Ceramic	Sapphire	Diamond	12"
RP-217-2	Stereo	Ceramic	Sapphire	Sapphire	12"
RP-217-3	Mono	Crystal	Sapphire	Sapphire	9"
RP-217-4	Stereo	Crystal	Sapphire	Sapphire	9"
RP-218-1	Stereo	Ceramic	Sapphire	Diamond	12"

GENERAL DESCRIPTION

The RP-217 and RP-218 series record changers are four-speed mechanisms designed to play in automatic sequence, 7, 10, and 12 inch records. Manual operation is also provided. Records with ¼ inch centerholes may be intermixed in any sequence of 7 inch, 10 inch and 12 inch diameters. A detachable centerpost is provided for playing records having 1½ inch centerholes.

The pickup arm is coupled to the mechanism through a friction clutch arrangement which permits handling of the pickup arm in or out of cycle without damage to the mechanism. A full 90° lift of the pickup arm is possible for ease of stylus and cartridge replacement.

Record separation is accomplished by means of a push-off finger and shelf at the centerhole of the records. The stabilizer arm must be employed for proper record separation when playing either ¼ inch or 1½ inch centerhole records.

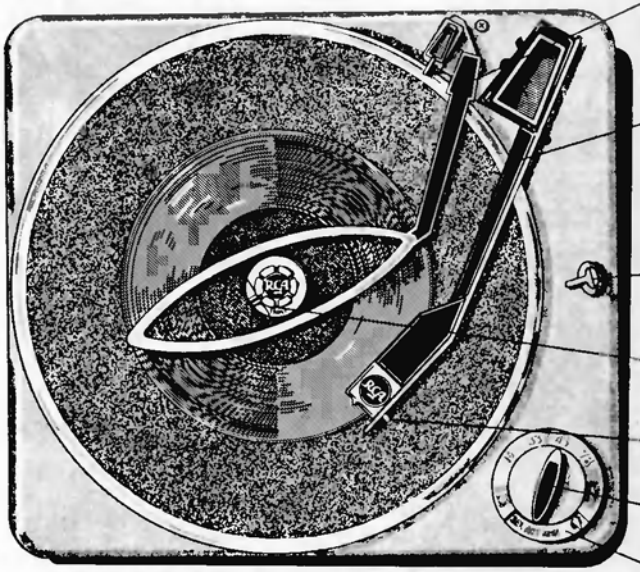

Figure 2—Controls

STABILIZER ARM To load or remove records, lift and turn the stabilizer arm off to the side. After loading, place the stabilizer arm so that it rests on the record stack.

PICKUP ARM May be handled manually when in "MAN" position of function control—the pickup arm returns to the pickup arm rest and the mechanism shuts off automatically after playing the last record.

PICKUP ARM REST Pickup arm may be pressed down on pickup arm rest for positive holding of the pickup arm.

1½" CENTERHOLE SPINDLE Used when playing records having 1½" centerholes.

STYLUS SELECTOR Slide action lever for selecting 78 rpm or MG stylus.

SPEED CONTROL Selects 16⅔, 33⅓, 45 or 78 rpm turntable speeds.

FUNCTION CONTROL Provides for selection of "MAN" (manual), "SEL" (select), "AUT" (automatic), and "OFF" positions.

CONTROLS

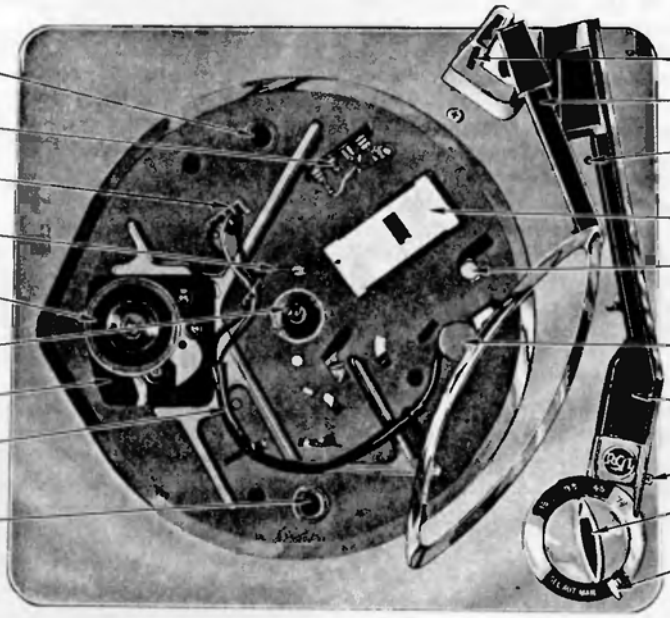

Figure 3—Top View of RP-218 With Turntable Removed

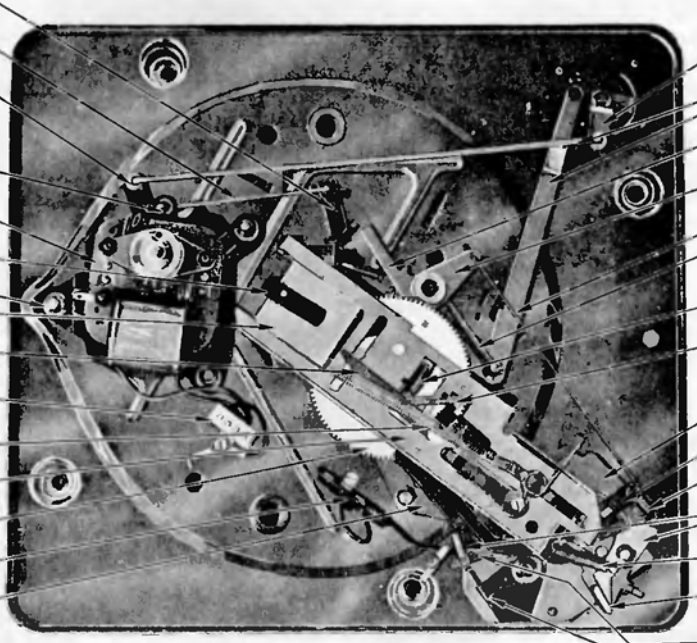

Figure 4—Bottom View of RP-218 Mechanism

ADJUSTMENTS

LANDING ADJUSTMENT

The landing position of the stylus is adjusted by means of an eccentric landing adjustment screw. When adjusted for correct landing on one size record (12 inch preferably), the landing position for each of the other two sizes is automatically established.

The landing adjustment screw (44A) is accessible from the underside of the record changer, or through an access hole provided in the motorboard. Disconnect the power cord from the instrument and place a 12 inch record on the centerpost with the stabilizer in place. Turn the function knob to "SEL" and rotate the turntable by hand until the record drops and the stylus is poised above the starting grooves of the record. Then turn the landing adjustment screw so the stylus will land on the record midway between the outer edge and the recorded portion.

Connect the power and cause the mechanism to go through cycle several times while observing the landing position.

Slight "touch up" of this adjustment may be necessary so that the pickup will land correctly for all three record sizes.

HEIGHT ADJUSTMENT

Two height adjustment screws are provided on the RP-217 and RP-218 series mechanisms.

Height adjustment screw (67) on the cycling slide is adjusted with the mechanism OUT OF CYCLE for a gap of from .065" to .075", (about the thickness of a penny) between the landing lever (44) and the pickup arm lever (54).

Height adjustment screw (11) in the pickup arm is adjusted with the mechanism IN CYCLE with the pickup arm at its full height. Adjust the height adjustment screw (11) so that the stylus is 1 3/16 inches above the turntable mat.

These adjustments will prevent the stylus from touching the motorboard out of cycle; and, further, enable the stylus to land properly on a full stack of records.

STYLUS FORCE

There is no adjustment provided for stylus force in the RP-217 and RP-218 series record changers.

The stylus force for all models except the RP-217-3 and RP-217-4 is 4 to 7 grams. The stylus force for the RP-217-3 and RP-217-4 is 9 to 11 grams.

If the stylus force is incorrect, the pickup arm counterweight spring (12) should be checked or replaced.

STYLUS REPLACEMENT

Removal of the "clip-in" stylus assembly and servicing of the cartridge is facilitated by the full 90° lift provided for the pickup arm. To remove the stylus grasp the stylus selector and pull away from the pickup body by ⅛", then pull the stylus assembly forward and out of the pickup.

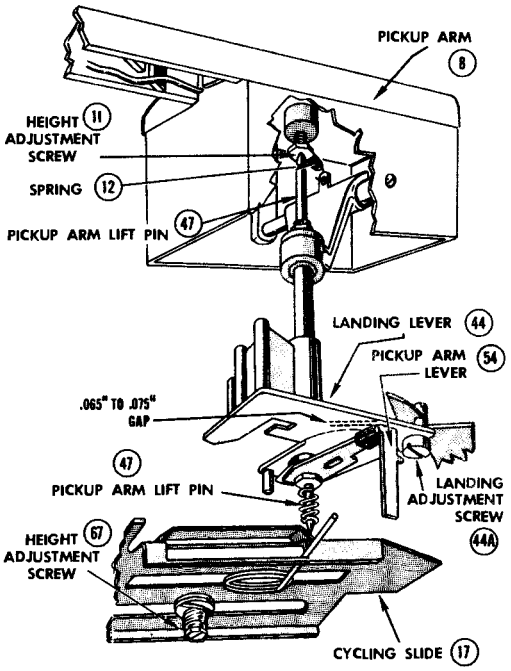

Figure 6—Adjustments

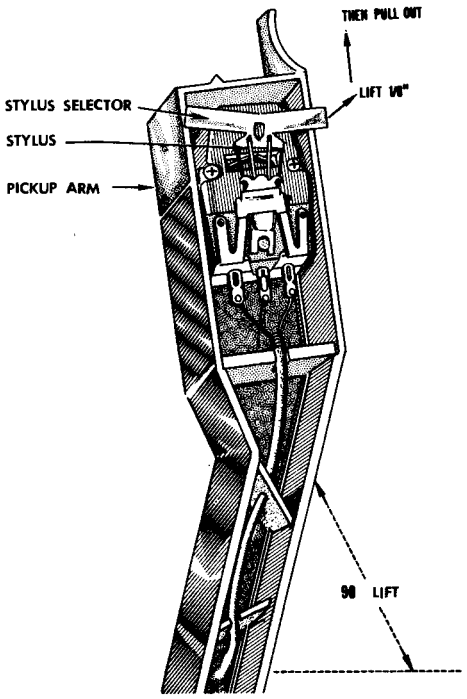

Figure 7—Stylus Replacement

CYCLE OF OPERATION

NOTE: In the cycle of operation it is assumed the mechanism has stopped automatically with the pickup arm on the rest.

PRELIMINARY PROCEDURE

Lift the stabilizer arm and place a stack of ¼" centerhole records (7"-10"- and 12") on the spindle (intermixed if so desired). Place the record stabilizer arm so it rests on the records.

OR

If playing records with 1½" centerhole, first place the large centerpost over the regular spindle. Place the record stabilizer arm so it rests on the records.

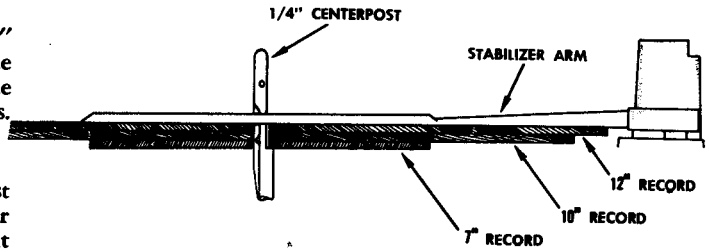

Figure 8—Preliminary Procedure

FUNCTION KNOB TURNED TO "MAN" (MANUAL) POSITION

Control lever (39) moves closing "OFF-ON" switch (51), and motor starts. The opposite end of the control lever actuates the automatic neutral link detent lever (41) and through the automatic neutral link engages the drive wheel to the motor shaft. Turntable starts turning.

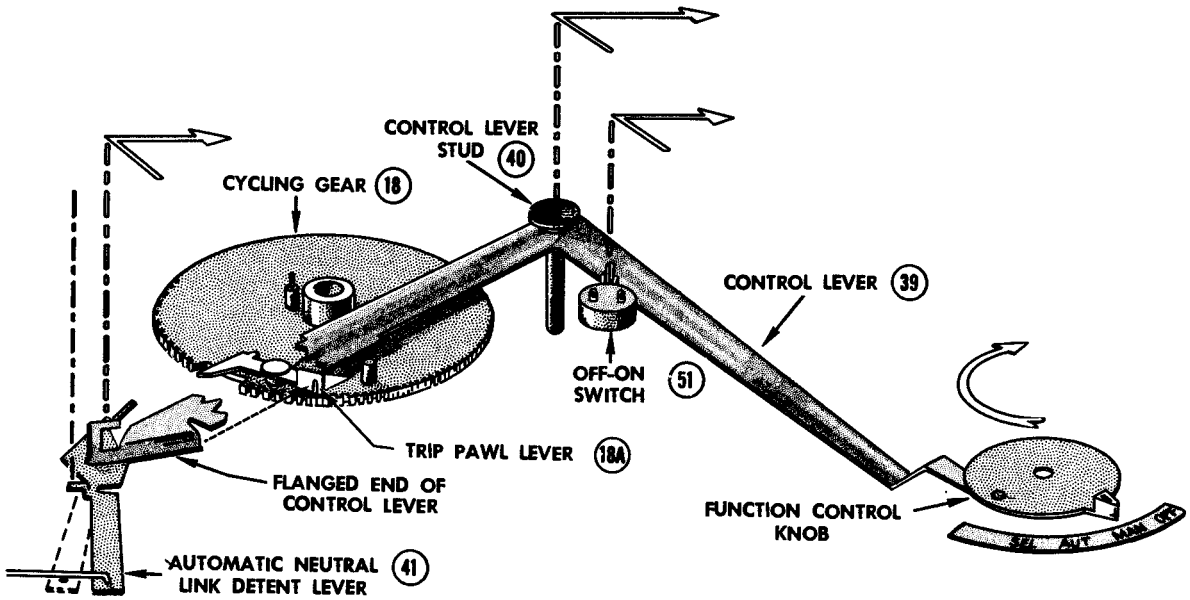

Figure 9—Manual Position

FUNCTION KNOB TURNED TO "SEL" (SELECT) POSITION

Further movement of the control lever (39) (now a lateral motion due to the control lever stud (40) following the right angle slot in the motorboard) causes flanged end of the control lever to strike the tab end of the trip pawl lever (18A). This causes the trip pawl to advance into the path of the projection on the turntable hub. Cycling gear (18) starts rotating when the projection on turntable hub arrives to strike trip pawl.

SERVICE HINTS

Failure to turn on may be caused by bent tab on control lever (39) not engaging switch (51). Binding of knobs or sticking in "SEL" position can be corrected by light lubrication of the knob shafts.

CYCLE OF OPERATION

CYCLING STARTS

As the cycling gear rotates, the cycling slide (17) starts its outward motion—this is accomplished by the pin extending downward from the cycling gear traveling in the elongated slot in the cycling slide. During the change cycle, the cycling gear will complete one revolution and the cycling slide will perform one complete excursion (outward and inward) of travel.

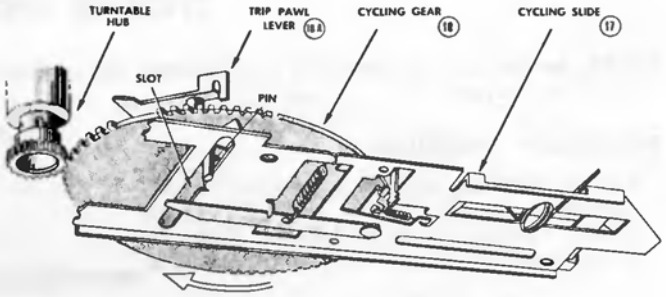

Figure 10—Cycling Starts

PICKUP ARM RISES (A)

Feeler (49) starts moving out as the cycling slide (17) continues its outward motion. Further outward motion of cycling slide causes pickup arm lift pin (47) to ride up the inclined portion of the lance on the cycling slide. Vertical motion of pickup arm lift pin causes the pickup arm (8) to rise, and also causes engagement of pickup arm lever (54) with landing lever (44) through the pressure of the rubber surface of pickup arm lever and the metal surface of the landing lever.

SERVICE HINTS

If cycling fails to start, check condition of trip pawl (18A). If mechanism stalls or slows down in cycle, check for bent or binding cycling gear (18).

The lift pin (47) must be free to travel vertically and the ends smooth and rounded for proper lift of the pickup arm.

Failure of the feeler to operate smoothly may be due to screw (97) being too tight. See Figures 34 and 35.

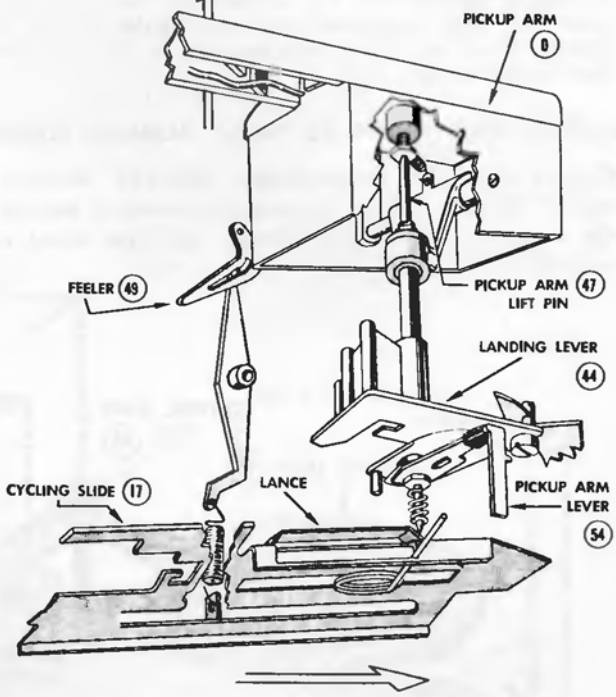

Figure 11—Pickup Arm Rises

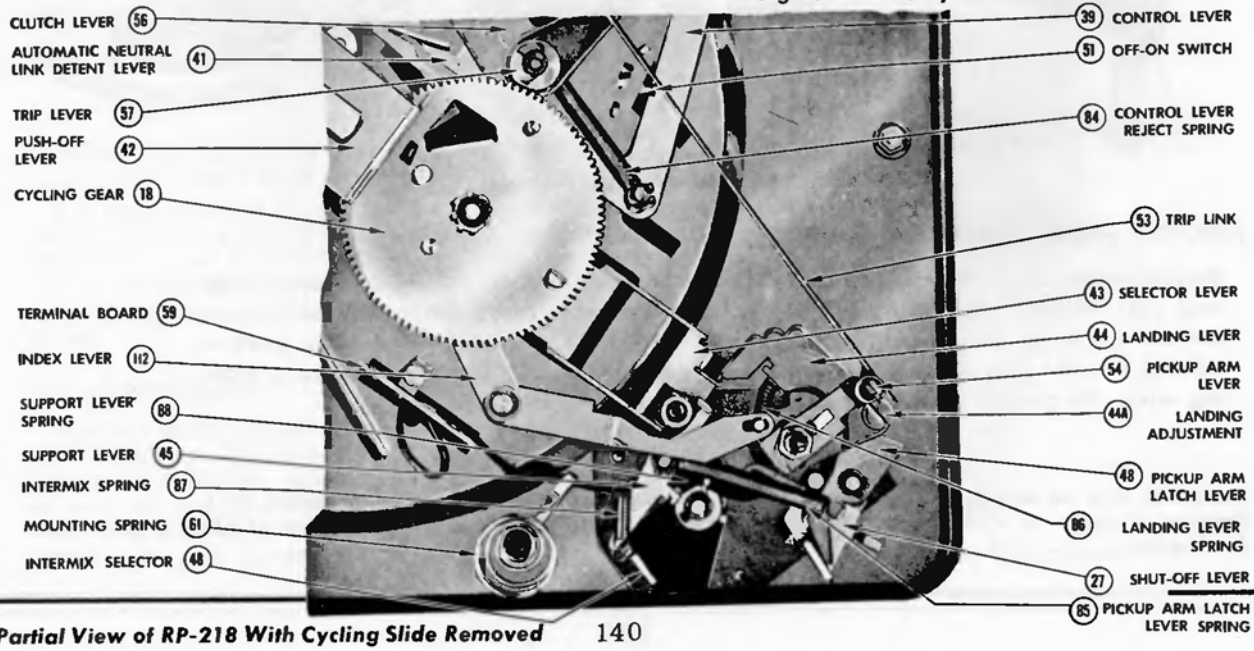

Partial View of RP-218 With Cycling Slide Removed

CYCLE OF OPERATION

PICKUP ARM RISES (B)

Further outward movement of the cycling slide (17) causes pickup arm lift pin (47) to arrive at the flat portion of lance on cycling slide completing the vertical rise of pickup arm (8). Continued outward movement of the cycling slide causes the vertical tab on the shut-off latch actuator (17C) to contact the tab on the shut-off lever (27). This starts the unlatching of the pickup arm latch lever (46) and the landing lever (44).

Continued rotation of the cycling gear causes the vertical tab on the selector lever (43) to contact the triangular tab of the cycling gear (18). This starts the vertical rise of the selector lever.

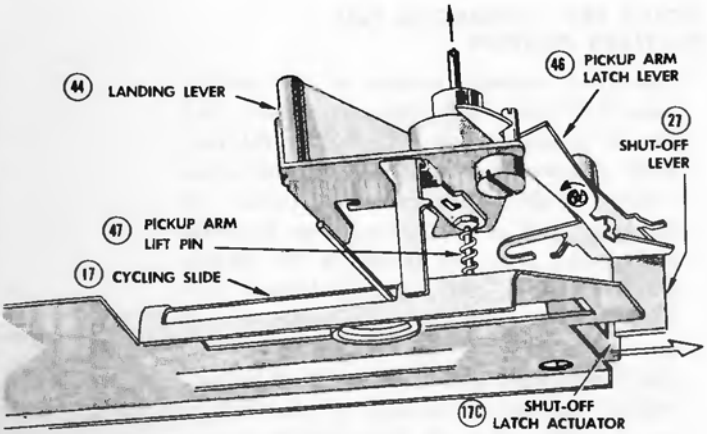

Figure 12—Pickup Arm Rises

SERVICE HINTS

Failure of the selector lever to rise may be caused by the vertical tab on the selector lever failing to contact the triangular tab. Check for missing springs (87) and (88) if feeler fails to rise from intermix housing.

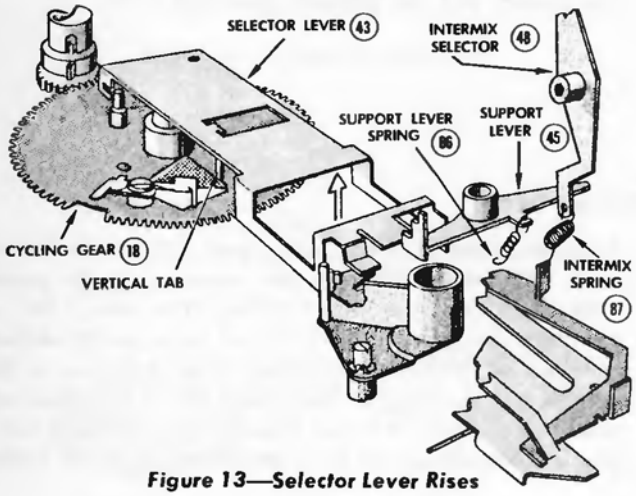

Figure 13—Selector Lever Rises

PICKUP ARM MOVES OUT

Further rotation of the cycling gear (18) and further outward movement of the cycling slide (17) results in the contact of actuator spring (17D) with the pickup arm lever (54) causing the pickup arm (8) to start its outward travel.

At this time the selector lever (having risen to full upward position) rests on the 7″ step of the support lever (45). The feeler (49) reaches its full outward position and is now prepared to sense the diameter of a dropping record.

The pickup arm latch lever (46) and the landing lever (44) become fully unlatched at this time.

The selector lever continues to rest upon the 7″ step of the support lever even after the triangular tab of the cycling gear has passed the vertical tab extending downward from the selector lever. This is because the support lever is forced against the selector lever by the support lever spring (88).

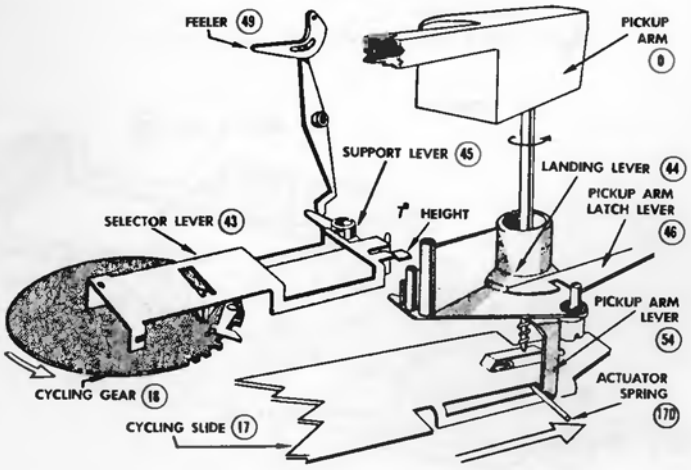

Figure 14—Pickup Arm Moves Out

CYCLE OF OPERATION

PICKUP ARM APPROACHES FULL OUTWARD POSITION

Continued outward motion of the cycling slide (17) causes the pickup arm lever (54) and the pickup arm (8) to approach full outward position and finally reach maximum outward position determined by contact of the upper part of the landing lever eccentric stud (44A) with the throat of the pickup arm latch lever (46). The additional outward movement of the cycling slide causes actuator spring (17D) to bend back and absorb this motion and does not result in any further outward movement of the pickup arm. At this time the bent tab projecting downward from the cycling gear (18) comes into contact with the push-off lever (42).

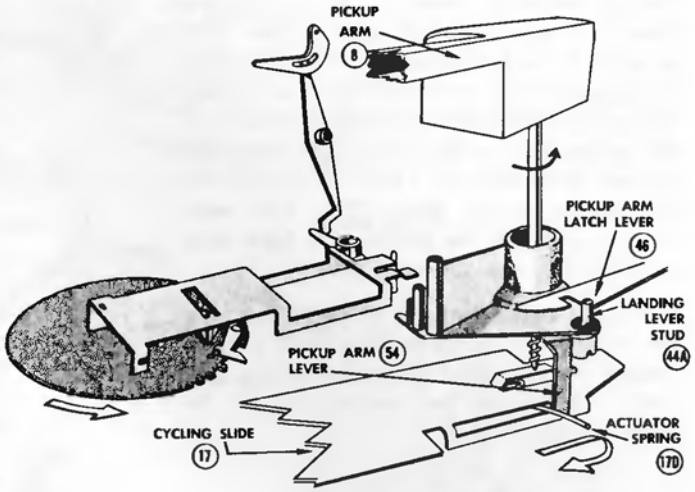

Figure 15—Full Outward Position

RECORD DROPS

Additional rotation of the cycling gear (18) results in further movement of the push-off lever (42). This motion results in the movement of the push-off finger in the spindle assembly (16) which causes the record to drop. The feeler (49) senses the record diameter—a 7" record causes no deflection; a 10" record causes partial deflection; and a 12" record causes full deflection of the feeler. As a result of the deflection of the feeler, the selector lever (43) falls to the appropriate step of the support lever (45), thus establishing the proper height of the selector lever for that record diameter. At this time, full 180 degree rotation of the cycling gear is accomplished and full outward motion of the cycling slide is reached.

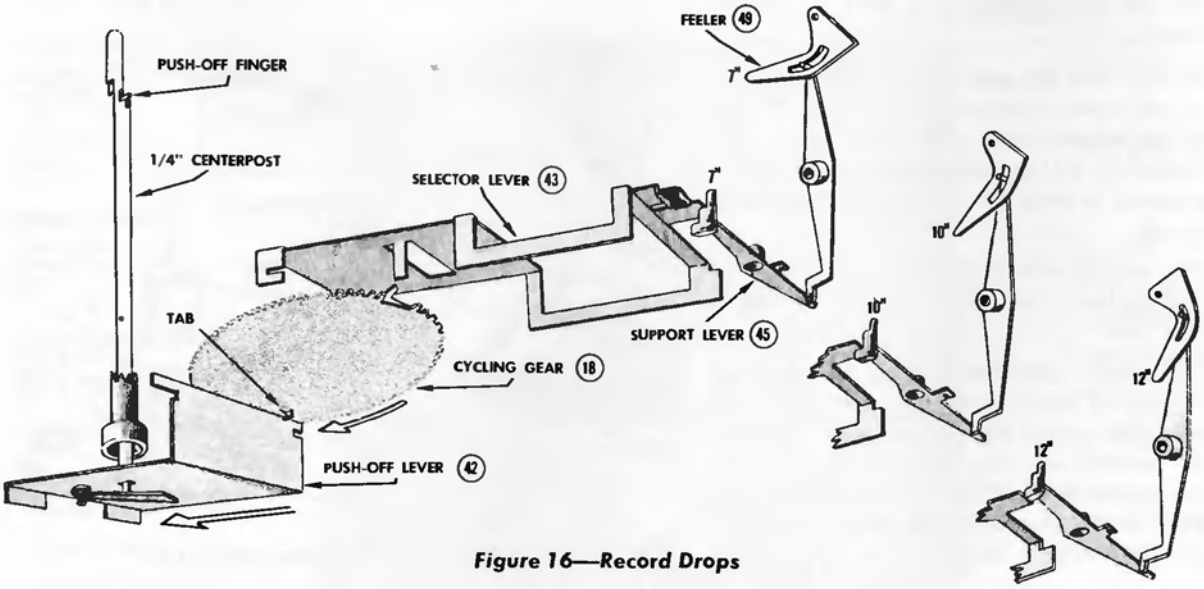

Figure 16—Record Drops

CYCLE OF OPERATION

PICKUP ARM MOVES IN

The cycling slide (17) starts its inward travel as the cycling gear (18) continues its rotation. The actuator spring (17D) guides the pickup arm back as the landing lever (44) moves toward landing position. (The pickup arm follows the landing lever due to the pressure between the pickup arm lever (54) and the landing lever.) Spring action (86) on the landing lever is the force which moves the landing lever at this time. The receding cycling slide merely directs the movement of the pickup arm lever. Push-off lever (42) returns to normal position. The unlatched condition of the pickup arm latch lever (46) and the landing lever (44) permits the free inward motion of the pickup arm.

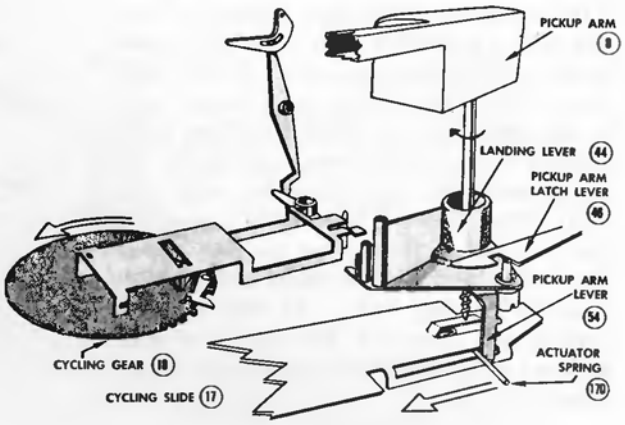

Figure 17—Pickup Arm Moves In

PICKUP ARM ARRIVES OVER LANDING POSITION

As the cycling slide (17) continues its inward travel the landing lever (44) contacts the selector lever (43) at the appropriate step previously determined by the height of the selector lever. Slack in the selector lever (lateral motion) is taken up by this contact and a positive position of the pickup arm above the starting grooves of the record is established.

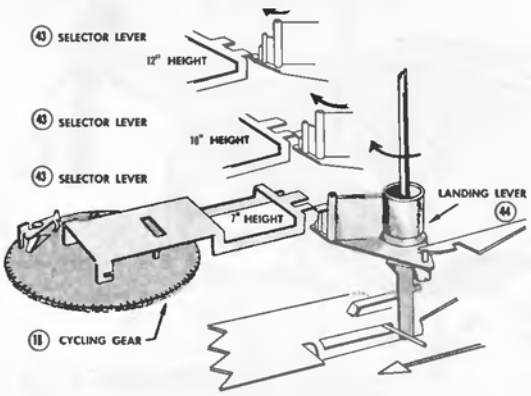

Figure 18—Landing Position Established

PICKUP ARM DESCENDS TO RECORD

Lift pin (47) rides down the inclined portion of the lance on the cycling slide (17) as the cycling slide continues its inward motion. The feeler (49) starts its return to the housing (6A). At this time the engagement pawl (18A) is reset by striking the casting on the turntable hub mounting assembly (26). The pickup arm lever (54) becomes disengaged from the landing lever (44) due to the relaxing of the brake tension between these two components.

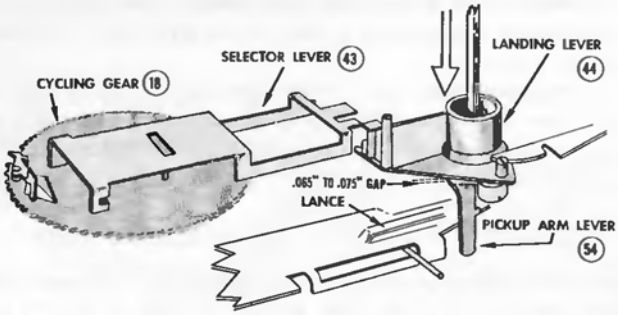

Figure 19—Pickup Arm Descends To Record

SERVICE HINTS

If erratic landing is encountered check for proper placement of actuator spring (17D) in cycling slide. Make sure the metal surface of the landing lever (44) is clean and dry. Improper HEIGHT adjustment can cause erratic LANDING.

CYCLE OF OPERATION

PICKUP ARM TOUCHES RECORD

The stud extending above the cycling gear (18) resets the clutch lever (56). The landing lever (44) moves away from the selector lever (43) due to the action of the index lever (112). The selector lever simply drops to the lowest step on the landing lever as the landing lever moves away and finally becomes latched to the pickup arm latch lever (46). The "helper" lever (17A) assists in the completion of the last portion of the cycle of operation. The feeler recedes fully into the housing (6A). At this time the cycling gear completes 360 degrees of rotation and the cycling slide completes its inward travel.

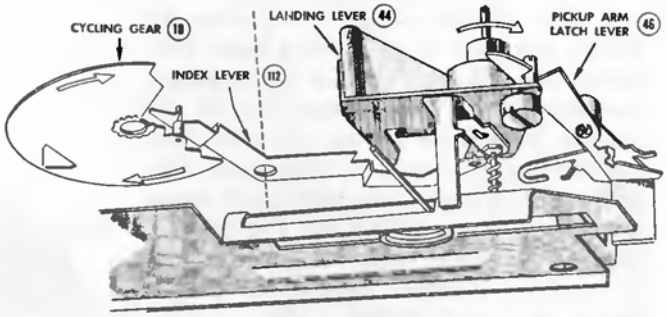

Figure 20—Landing Lever Re-Latches

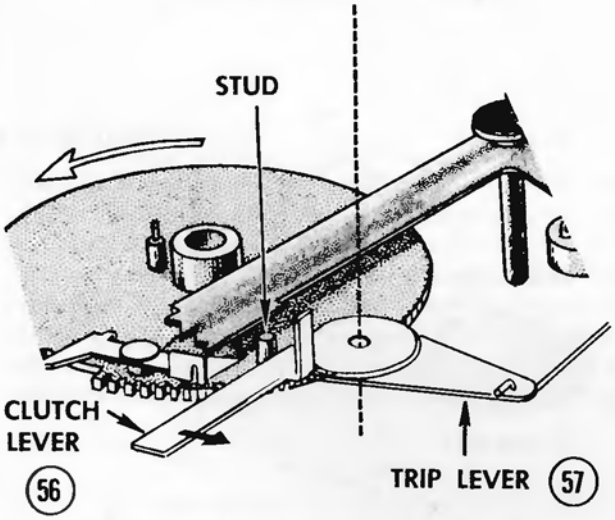

Figure 21—Clutch Lever Re-Set

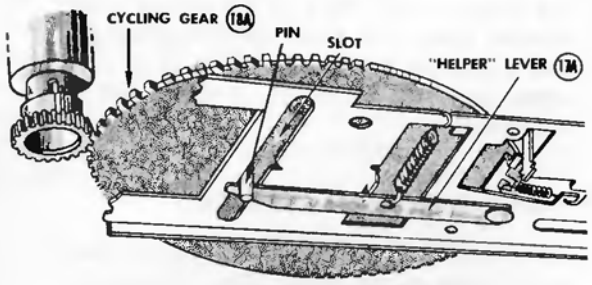

Figure 22—"Helper" Lever Action

RECORD PLAYS

The pickup arm, having descended to the record, causes contact of the stylus with the record starting groves. The pickup arm is now directed solely by the grooves on the record; the only mechanical engagement is that of the trip link (53) connecting the pickup arm lever (54) to the trip lever.

As the record plays and finally comes to the spiral lead-in grooves, the trip link (operated by the inward travel of the pickup arm lever) causes the trip lever to move the clutch lever (56) into contact with the trip pawl lever (18A) on the cycling gear. This causes the cycle of operation to repeat.

SERVICE HINTS

Continuous trip may be caused by failure of the clutch lever (56) to re-set. Check for oil or loose assembly. If stylus skips grooves or fails to become free at the time of "touchdown" check action of index lever (112) and check for proper clearance between landing lever (44) and pick-up arm lever (54). See Figure 6.

LAST RECORD PROCEDURE

As the last record falls, the stabilizer arm (20) drops also, with the shaft end resting on the extended portion of the shut-off latch actuator (17C). This does not affect the playing of the last record; however, at the completion of the change cycle which caused the last record to drop, the stabilizer arm shaft drops further and forms an obstruction to the free movement of the cycling slide.

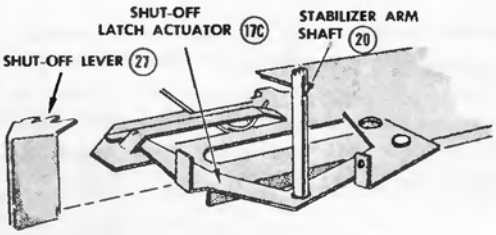

Figure 23—Stabilizer Drops

SHUT-OFF CYCLE STARTS

At the completion of the last record the cycle of operation starts to repeat. Since the stabilizer arm shaft is now in the downward position, the shut-off latch actuator (17C) is forced inward as the cycling slide (17) moves outward. This causes the shut-off latch actuator to miss the shut-off lever (27) as the cycling slide moves out. The pickup arm lever (54) and the landing lever (44) remain latched.

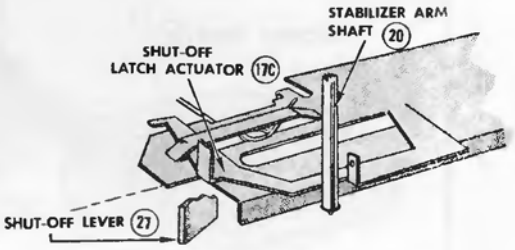

Figure 24—Stabilizer Arm Drops Further

PICKUP ARM DESCENDS TO REST POSITION

As the cycling slide starts its inward travel, the latched condition of the pickup arm lever (54) to the landing lever (44) prevents the pickup arm from following the receding actuator spring on the cycling slide. The pickup arm then descends to the rest position.

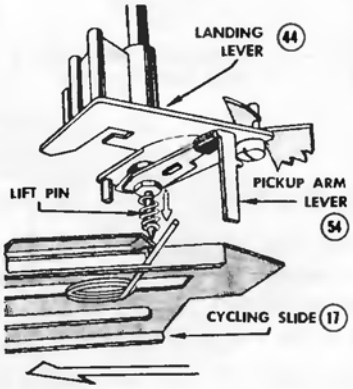

Figure 25—Pickup Arm Descends to Rest Position

LAST RECORD CYCLING COMPLETED

Further inward travel of the cycling slide (17) causes the shut-off latch to contact the control lever stud (40) and thereby push the control lever to the off position. The control lever also actuates the off-on switch, which shuts off the motor, and actuates the automatic neutral link detent lever (41), which causes the drive system to come to an automatic neutral condition.

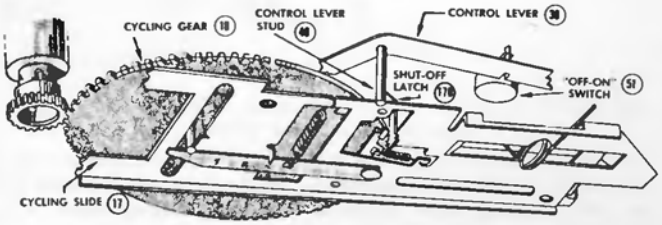

Figure 26—Shut-Off Occurs

SERVICE HINTS

Stabilizer arm shaft must be lubricated and free to drop for proper last record action. Check for free motion of control lever (39) if mechanism stalls at the time of shut-off. To check automatic neutral operation, turntable should be free to turn in either direction after mechanism has completely stopped.

MANUAL OPERATION

FUNCTION KNOB TURNED TO "MAN" POSITION

As the function knob is turned to the manual position the control lever (39) closes the "off-on" switch (51) causing the motor to start, and through the automatic neutral link detent lever (41) causes the drive system to engage the turntable (13).

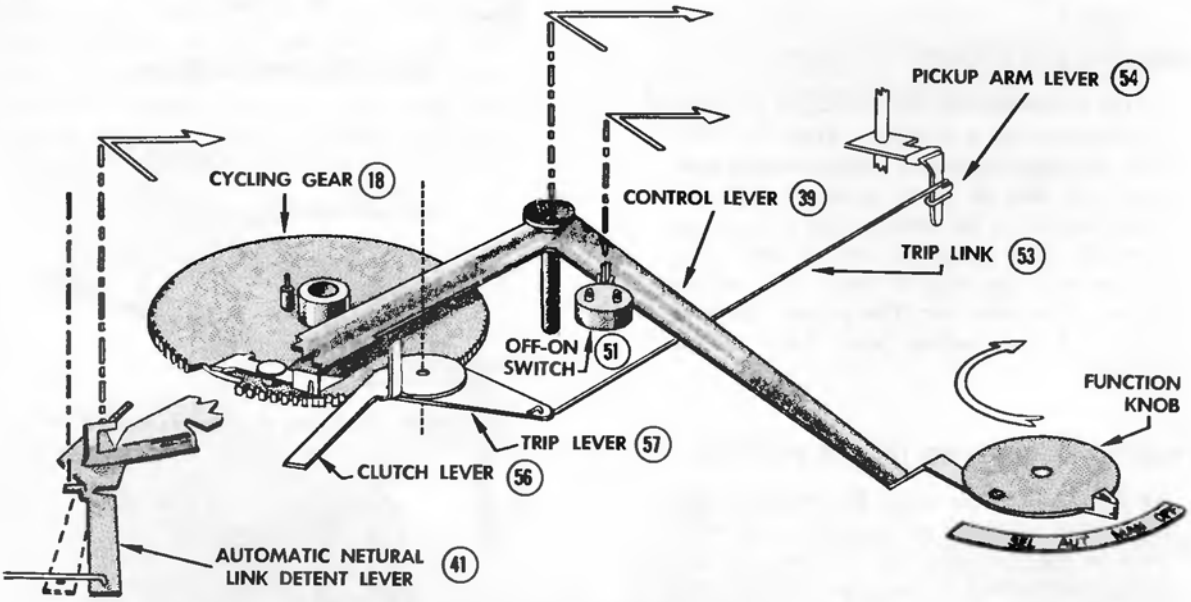

Figure 27—Manual Operation

CONDITIONS EXISTING IN "MAN" POSITION

The control lever linkage is in such a position as to prevent the inward movement of the clutch lever (56). This prevents automatic trip at the end of the record.

The cycling gear (18) and the cycling slide (17) remain stationary.

The pickup arm lever (54) and the landing lever (44) remain disengaged.

PLAYING RECORDS MANUALLY

The pickup arm may be manually raised and placed upon the starting grooves of any size record (or placed at any point in the recorded portion of any size record). At the end of the record no automatic trip occurs. The pickup arm must be manually lifted and placed on the rest. Additional record selections are manually re-placed on turntable and pickup arm placed on starting grooves for each record selection.

SERVICE HINTS

If mechanism trips in manual, check for bent ear on clutch lever (56). Also check trip pawl lever (18A) for freedom of motion. If pickup arm fails to become free for manual handling, check for proper clearance between landing lever (44) and pickup arm lever (54). See Height Adjustment, Figure 6.

REPLACEMENT PARTS

ILL. NO.	STOCK NO.	DESCRIPTION
		PICKUP AND ARM ASSEMBLY
6	110985	Arm—pickup arm shell with cable, date brown, for RP-217-1, -2
6	111194	Arm—pickup arm shell with cable, RP-217-3
6	111195	Arm—pickup arm shell with cable, RP-217-4
6	110986	Arm—pickup arm shell with cable, black for RP-218-1
9	110987	Bracket—pickup arm swivel, for RP-217-1, -2, -3, -4
9	110988	Bracket—pickup arm swivel, for RP-218-1
10	110906	Shaft—pickup arm pivot, for RP-218-1
10	110989	Shaft—pickup arm pivot, for RP-217-1, -2, -3, -4
11	110990	Screw—pickup arm height adjustment, #6-32 x 0.38 long for Ill. #12
12	110992	Spring—pickup arm counterweight, 0.195" O. D., 0.018" wire diameter, 0.54" long for Ill. #6 RP-217-1, -2
12	111202	Spring—pickup arm counterweight, 0.195 O. D., x 0.62" long, RP-217-3, -4
13	110993	Cable—pickup arm cable assembly, RP-217-1, -2
13	111200	Cable—pickup arm cable assembly, RP-217-3
13	111201	Cable—pickup arm cable assembly, RP-217-4
14	108537	Screw—pickup mounting, #4-40 x .38 long, RP 217-1, -2

ILL. NO.	STOCK NO.	DESCRIPTION
15	110023	Pickup—complete with 3 mil synthetic sapphire and 0.7 mil diamond styli (pickup stamped RMP 200-9) RP-217-1, RP-218-1
15	110021	Pickup—complete with 3 mil and 0.7 mil synthetic sapphire "snap in" stylus (pickup stamped RMP 200-8) RP-217-2
15	111196	Pickup—with sapphire synthetic 1 mil and 3 mil styli, complete with spring, RP-217-3
15	111197	Pickup—with dual sapphire synthetic 3 mil and 0.7 mil styli, with spring, RP-217-4
15A	110022	Stylus—3 mil synthetic sapphire and 0.7 mil diamond stylus assembly for (pickup stamped RMP 200-9) RP-217-1 and RP-218-1
	103331	Stylus—1 mil synthetic sapphire, RP-217-3
15A	108719	Stylus—0.7 mil synthetic sapphire, RP-217-4
15A	110020	Stylus—dual 3 mil and 0.7 mil sapphire stylus for pickup stamped RMP 200-8, RP-217-2
15A		
15B	105483	Stylus—3 mil synthetic, RP-217-3, -4
21	111199	Knob—stylus selector knob and retainer cap, RP-217-3, -4
22	111198	Spring—0.147 O. D. x 0.27" long for pickup RP-217-3, -4
27	110994	Shield—hum RP-217-1, -2, RP-218-1

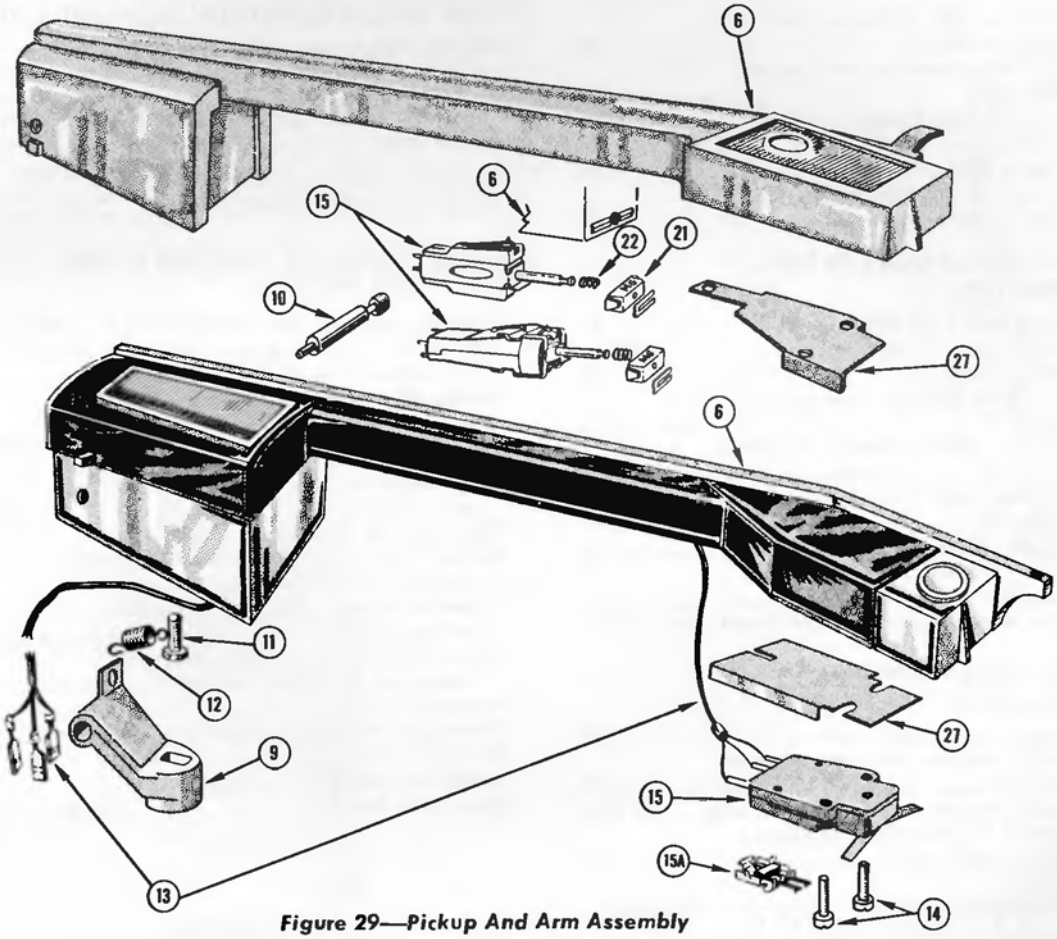

Figure 29—Pickup And Arm Assembly

LUBRICATION

The mechanism is properly lubricated when it leaves the factory; additional lubrication should not be necessary for a long period of time.

A light machine oil (Singer Sewing Machine Oil or equivalent) should be used to lubricate the stabilizer arm shaft, pickup lift rod and the bearings of the drive motor.

On all other bearing surfaces use *STA-PUT No. 320 or equivalent heavy oil sparingly.

Apply a medium weight clinging type of grease to sliding surfaces such as: control lever stud (40), automatic neutral link detent lever (41), elongated slot in cycling slide, push-off lever and the points upon which the cycling slide travels. COSMOLUBE No. 1 (or equivalent) may be used for this application.

SERVICE HINTS

ERRATIC LANDING

(Pickup lands off record, or on recorded portion of record)

	Figure
Landing adjustment incorrect	6
Landing adjustment stud (44A) loose	6
Pickup arm wiring interferes with pickup	29
Pickup arm lever brake cushion (54C) out of place or oily	19
Pickup arm shaft binding in intermix housing support (6A)	34 & 35
Actuator spring (17D) improperly positioned	17
Height adjustment (67) incorrect	6

IMPROPER LANDING

(Pickup lands for wrong diameter record)

Selector lever (43) bent	18
Landing lever (44) binding on shaft	18
Support lever (45) binding on intermix selector (48)	16
Intermix selector (48) binding or feeler (49) binding in housing	34
Pickup arm wiring interferes with support lever movement	29
Intermix spring (87) missing	35
Support spring (88) missing	35
Selector spring (89) missing	34
Retainer ring (72) on cycling gear (18) not seated properly	16

PREMATURE TRIP—FAILURE TO TRIP—CONTINUOUS TRIP

Ear on clutch lever (56) bent	21
Trip lever spring (78) missing or trip lever bent	35
Clutch lever (56) bent or inside surface not smooth	21
Trip link (53) bent or binding on pickup arm lever (54)	21
Grease between clutch lever (56) and trip lever (57)	21
Function knob sticking in "select" position	34
Trip pawl lever (18A) rounded at point of engagement	21
Clutch lever mounting stud (in motorboard) bent	35

FAILURE TO TRACK RECORDS

(Pickup skips grooves)

Incorrect stylus being used	29
Pickup wiring interferes with free movement of pickup arm	29
Binding of pickup arm shaft (54A) in housing	34 & 35
Spiral wrap of trip link (53) binding on pickup arm lever (54)	21

TRIPS IN MANUAL

Ear on clutch lever (56) bent	27
End of trip pawl lever (18A) bent	27

FAILURE TO TURN ON—NO POWER

Cable connections, wiring, soldered connections open circuited	
Actuator on switch (51) not engaging tab on control lever (39)	9

FAILURE TO DROP RECORDS

	Figure
Stabilizer arm and shaft (20) bent or binding	24
Push off lever (42) binding or improperly assembled	16
Lever in spindle assembly (16) binding or bent	16
Tab on cycling gear (18) bent or not engaging push of lever (42)	16
¼ inch spindle assembly mounting nut (76) loose	35
(For 1½ inch centerhole records) 1½ inch spindle not seated	30

STALLS OR SLOWS DOWN IN CYCLE

Cycling gear (18) bent or binding	10
Turntable bearing binding	34
Motor idler greasy, or slipping on turntable rim	32
Motor or motor linkage jammed	32

PICKUP ARM STRIKES BOTTOM OF RECORD STACK

Improper height adjustment (11)	6

STYLUS DRAGGING TOP OF RECORD STACK

(On Turntable)

Improper height adjustment (11)	6
Stylus improperly installed in pickup	7

FAILURE TO SHUT OFF AFTER LAST RECORD OR IMPROPER SHUT OFF

Stabilizer arm shaft (20) not lubricated, or binding	24
Shut off latch (27) bent or not assembled properly	24
Switch actuator ear on control lever (39) bent	26
Height adjustment (67) incorrect—set too low	6

LOW SPEED—RUMBLE—WOW

Grease or oil on turntable drive surface or on motor idler	32 & 34
Motor bearings binding	32
Rubber motor mounting grommets improperly assembled, missing, worn	32
Turntable support (26) mounting screws loose or missing	34
Neoprene washer or turntable bearing washers not lubricated, missing	34
Turntable (13) bent	34
Obstruction touching underside of turntable	35
Bump or cut on motor idler (1)	32
Spindle assembly (16) not tight	34
Motor shaft bent	32

CLEANING

It is important that the drive motor spindle, rubber idler wheel and the inside rim of the turntable be kept clean and free of oil and grease.

Chlorothene (Dow Chemical Co.), naphtha or isopropyl alcohol are recommended cleaning agents for cleaning rubber and metal parts of the mechanism.

16-2/3—45 RPM CENTERPOST

REPLACEMENT PARTS (Cont.)

ILL. NO.	STOCK NO.	DESCRIPTION
		45 R.P.M. CENTERPOST
104	110905	Centerpost—45 rpm centerpost assembly—complete

OPERATION OF 16 2/3 — 45 RPM CENTERPOST

When playing records with 1½ inch centerholes, the detachable 1½ inch centerpost is employed. The records rest upon a shelf formed by the centerpost body assembly and the nose cap. The records are also supported by a retractable shelf at a point just opposite the formed shelf.

At the time of record drop, the "movable shelf-push off slide" is actuated by the push off finger in the ¼ inch centerpost. This causes the retractable shelf to recede into the centerpost body, and at the same time the push off slide forces the bottom record off the formed shelf causing the record to drop. The other records in the stack remain in position due to the opposition of the retainer in the nose cap. The centerpost should always be installed or removed with a STRAIGHT VERTICAL MOTION with the word FRONT facing the front of the record changer. The STABILIZER ARM should always be employed when using the centerpost.

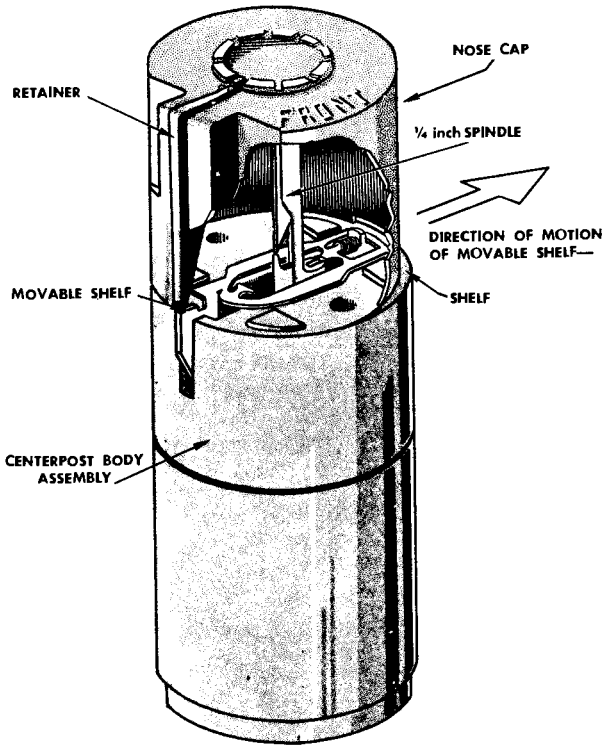

Figure 30—Centerpost Operation

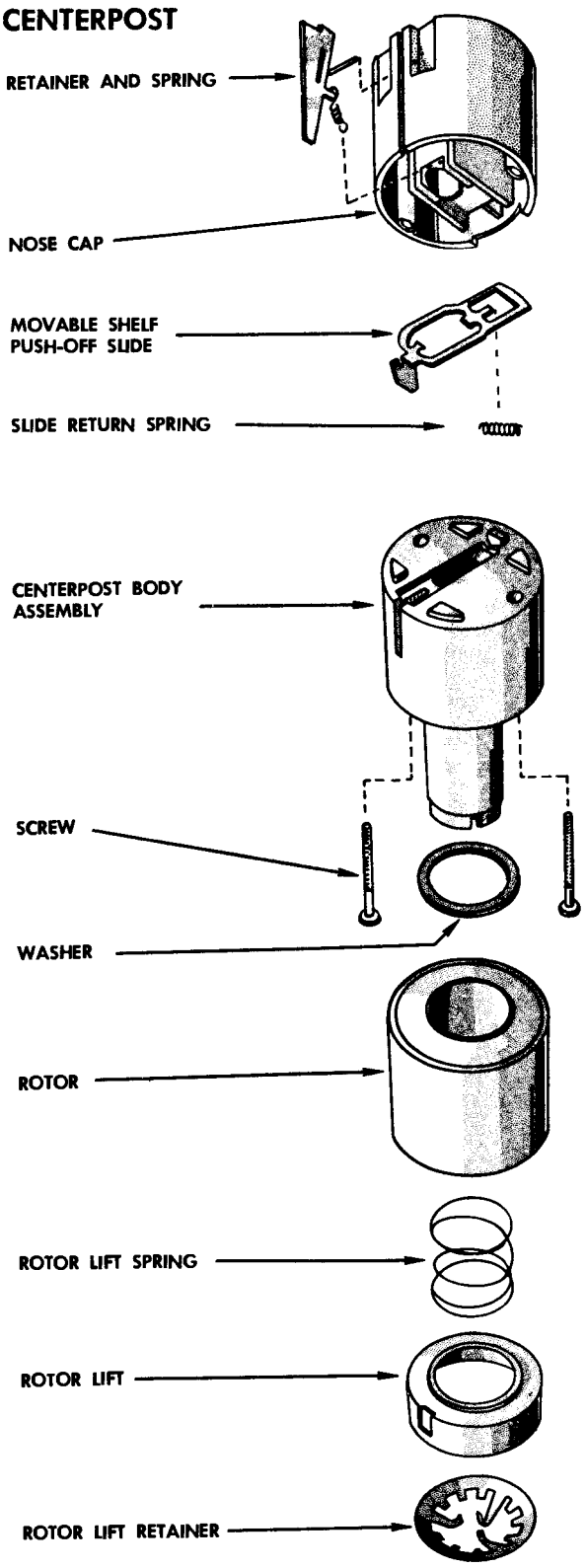

Figure 31—16 2/3—45 rpm Centerpost

REPLACEMENT PARTS (Cont.)

ILL. NO.	STOCK NO.	DESCRIPTION
		MOTOR ASSEMBLY Stamped 1096251-1, Code 190 105/125 v., 60 cycle
1	108602	Wheel—Turntable drive idler
2	108603	Arm—Idler
3	108601	Link—Toggle
4		Spring—Compression for Ill. #3
5	102595	Washer—Cup, for idler pulley support stud
6	108606	Spring—Detent, 0.187" O. D. x 1.937" long
7	75761	Grommet—Motor mounting
8	78374	Spring—Idler wheel tension, 0.185/0.200" O. D. x 0.570" long
9	111058	Motor—Complete
10	20165A	Washer—"C" retaining ring, 0.375" O. D. x 0.122" I. D. x 0.025" thick
11	108604	Washer—Fiber, 0.192" I. D. x 0.312" O. D. x 0.015" thick
12	78647	Washer—Shim, 0.375" O. D. x 0.188"/0.192" I. D. x 0.008/0.010" thick

ILL. NO.	STOCK NO.	DESCRIPTION
		MOTOR ASSEMBLY Stamped: 1096251-1, CODE 107 105/125 v., 60 cycle
1	103445	Washer—"C" retaining washer 0.094" I. D. x 0.230" O. D. x 0.015" thk.
2	108607	Washer—Flat Metal, 1/4" O. D. x 0.130"/0.127" I. D. x 0.008" thk.
3	108608	Washer—Fiber, 5/16" O. D. x 0.123"/0.121" I. D. x 0.015" thk.
4	110040	Wheel—Turntable drive idler wheel
5	108610	Spring—For idler link, 0.125" O. D. x 21/32" length, 0.012" wire
6	108611	Link—Idler link with screw (111 #6A) and nylon insert (111 #6B)
6A		Screw—Set screw
6B		Insert—For idler link set screw
7		Plate—Idler plate assembly
8	108613	Spring—For idler plate, 5/32" O. D. x 3/4" length, 0.008" wire
9	108614	Spring—Detent spring, 0.171" O. D. x 1/2" length, 0.022" wire
10	75761	Grommet—Motor mounting grommet
11	111058	Motor—Phono motor assembly complete

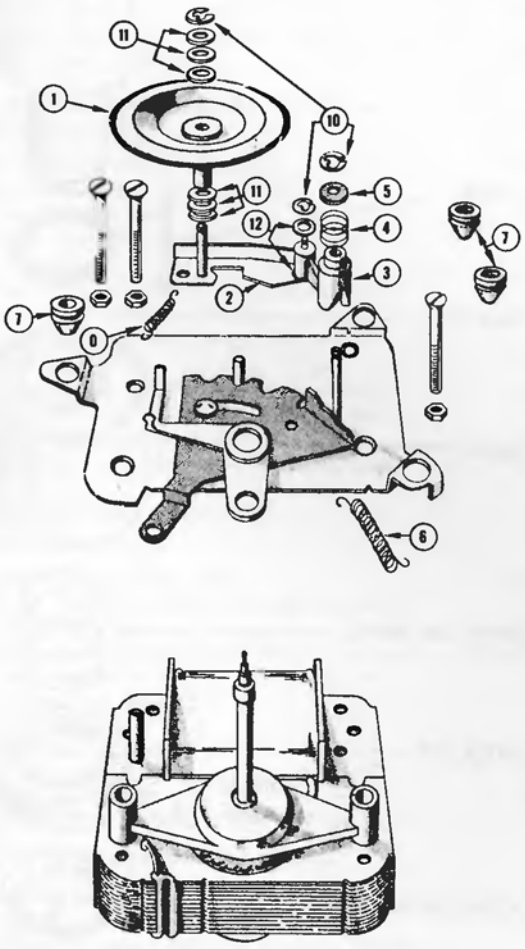

Figure 32—Motor Assembly Stamped 1096251-1 190

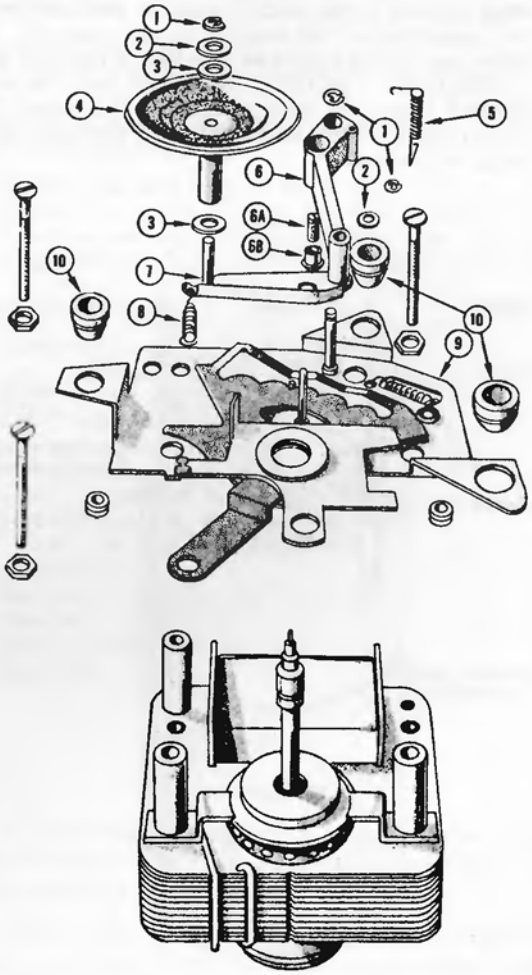

Figure 33—Motor Assembly Stamped 1096251-1 107

RCA Victor (Material continued) **RP-217 Series, RP-218 Series**

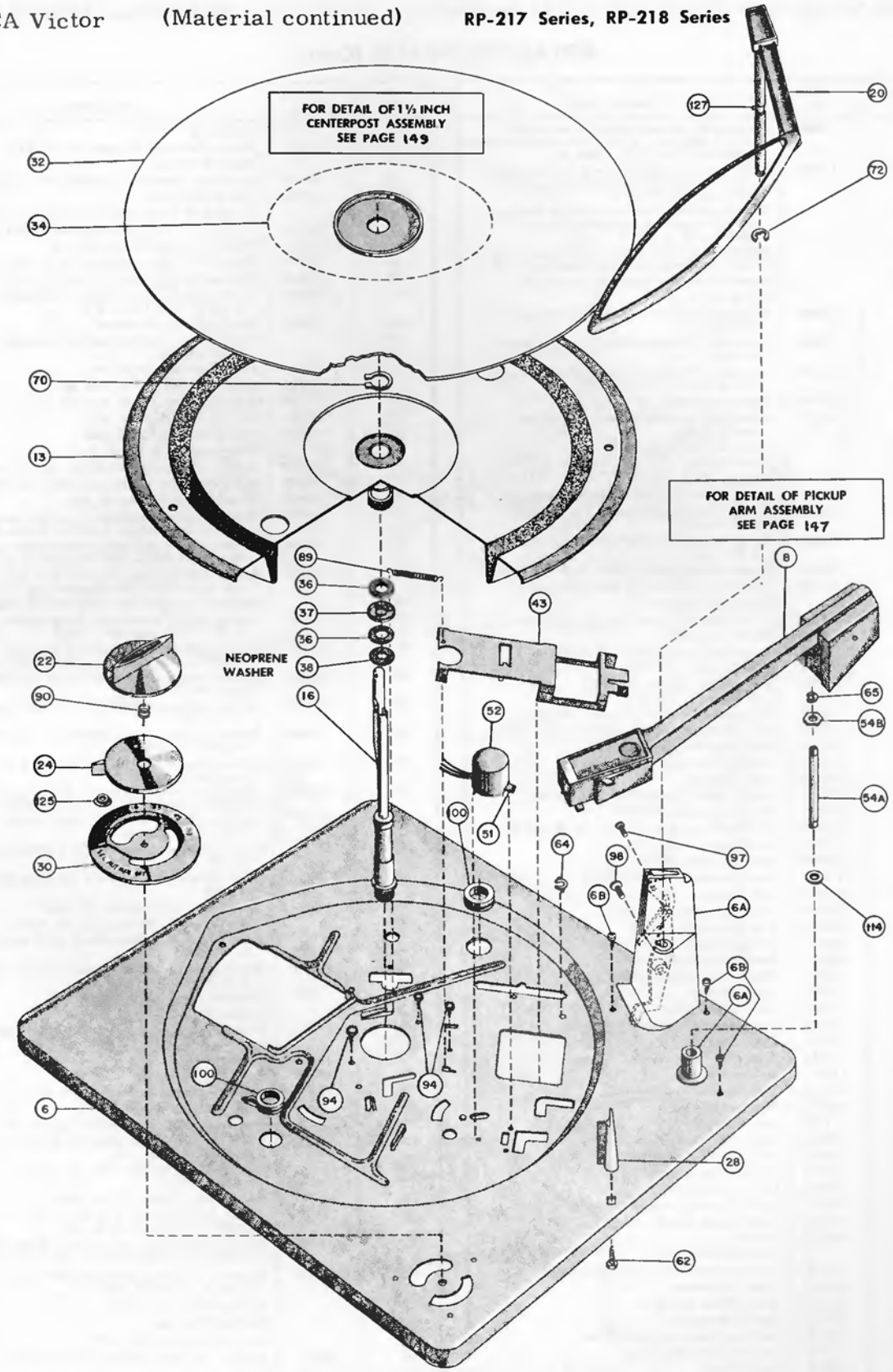

Figure 34—Exploded View RP-217-1 Top

REPLACEMENT PARTS (Cont.)

ILL. NO.	STOCK NO.	DESCRIPTION
6	110835	Motorboard—Sub-assembly with welded and staked parts—and intermix housing—champagne gold—for RP-217-1, -2, -3 and -4
6	110904	Motorboard—Sub-assembly with welded and staked parts—and intermix housing—frost aluminum—for RP-218-1
6A		Support—Intermix housing stabilizer arm and tone arm pivot—champagne gold—for RP-217-1, -2, -3 and -4
6A		Support—Intermix housing stabilizer arm and tone arm pivot—frost aluminum—for RP-218-1
6B		Screw—#8-32 x 3/8" long for Support 6A
8		Pickup arm assembly
13	110907	Turntable—Complete with bearing and pinion—RP-217-1
13	110908	Turntable—Complete with bearing and pinion—RP-218-1
13	111191	Turntable—9" diameter—complete with bearing and pinion—RP 217-3 and -4
16	110909	Spindle—Assembly—1/4" diameter
17	111174	Slide—Cycling—complete with latch—lever and springs
17A		Lever—Cycling gear
17B		Latch—Shut-off
17C		Actuator—Shut-off latch
17D	110911	Spring—Actuator—0.60" diameter—music wire
17E	110912	Spring—Cycling gear lever—0.218" O. D. x 0.81" long
17F	110296	Spring—Shut-off latch actuator—0.23" O. D. x 0.56" long
17G	110101	Spring—Shut-off latch—0.200" O. D. x 5/8" long
18	111172	Gear—Cycling—complete with staked parts
18A		Lever—Trip pawl
18B	111173	Spring—Straight music wire—for trip pawl
19	111058	Motor—Assembly
20	110915	Arm—Stabilizer—RP-217-1, -2, -3 and -4
20	110916	Arm—Stabilizer—RP-218-1
22	110917	Knob—Speed selector with shaft—RP-217-1, -2, -3 and -4
22	110918	Knob—Speed selector with shaft—RP-218-1
24	110919	Knob—Function Control—RP-217-1, -2, -3 and -4
24	110920	Knob—Function control—RP-218-1
26	110921	Support—Turntable
27	110922	Lever—Shut-off
28	110923	Rest—Pickup arm—RP-217-1,-2,-3 and -4
28	110924	Rest—Pickup arm—RP-218-1
30	110925	Escutcheon—Control—RP-217-1, -2, -3 and -4
30	110926	Escutcheon—Control—RP-218-1
32	110927	Mat—Turntable—RP-217-1, -2
32	111192	Mat—Turntable—RP-217-3 and -4
32	110928	Mat—Turntable—RP-218-1
34	110929	Insert—Turntable mat—RP-218-1
35	110930	Link—Automatic neutral
36	78720	Washer—Bearing—0.410" I. D., 0.685" O. D.
37	78660	Bearing—Turntable thrust
38	110931	Washer—Oil resistant sheet rubber
39	110933	Lever—Control
40	110932	Stud—Control lever
41	110934	Lever—Automatic neutral link detent
42	110935	Lever—Push-off
43	110936	Lever—Selector—with vinyl tubing
44	110937	Lever—Landing
44A	110938	Stud—Landing lever eccentric
44B	74431	Retainer—Landing lever
45	111142	Lever—Support
46	110940	Lever—Pickup arm latch
47	110941	Lift Pin—Pickup arm—RP-217-1, -2, -3 and -4
47	111193	Lift pin—Pickup arm—RP-218-1
48	110942	Lever—Intermix selector
49	110943	Feeler—(Intermix indexing lever)
50	111175	Lever—Speed control
51	108457	Switch
52		Cover—Switch
53	110945	Link—Trip—5.96" long with loaped end
54	110946	Lever—Pickup arm
54A	110947	Shaft—Pickup arm lever
54B	103402	Nut—Shaft retainer
54C	110948	Cushion—Pickup arm lever brake
55	111176	Link—Motor speed change
56	110949	Lever—Clutch
57	110950	Lever—Trip
58	110951	Spring—Flat—push-off lever—for Ill. #42
59		Board—Terminal
60	109440	Connector—Three-contact female—for phono power
61	110176	Spring—Mounting
62		Screw—#10 x .44" long—hex head—for Ill. #28
63	33726	Washer—"C" type retaining—for Ill. #19, 50, 67
64	74431	Washer—Spring—for Ill. #40, 112
65	77269	Washer—"C" type retaining—for Ill. #24, 47, 56
66	204043	Washer—"C" type retaining—for Ill. #113
67	110952	Screw—Slide assembly height adjustment—0.164-32 x 0.875" long—for Ill. #17
68	110953	Spring—Pickup arm torque
69		Eyelet—Slide assembly height adjustment screw—Ill. #67
70	78654	Ring—Retaining—for Ill. #13
71	101517	Ring—Retaining—for Ill. #26, 88
72	101500	Ring—Retaining—for Ill. #18, 46, 45, 84
73	110954	Ring—Retaining—for Ill. #27
74	110955	Ring—Retaining—for Ill. #44
75		Eyelet—Push-off lever—Ill. #42
76	100342	Nut—Spindle retaining—.500-32—for Ill. #6
77	103402	Nut—Pickup arm retaining, 0.250-32—for Ill. #8
78	110956	Spring—Trip clutch—for Ill. #57
79	110957	Spring—Height adjustment—five active turns—0.031" wire diameter, 0.187" I. D.—for Ill. #67
80	110958	Spring—Lift pin, 3 1/2 active turns—0.018" wire diameter, 0.250" x .50" long—for Ill. #47
81	110959	Spring—Push-off lever—0.218" I. D. x .38" long—four turns—0.031 wire diameter—for Ill. #42
82		Terminal—Support lever spring—for Ill. #88
84	110961	Spring—Control lever reject spring—0.250" O. D. x 1.75" long—for Ill. #39
85	110962	Spring—Push-off lever—and tone arm latch return —.250" O. D. x 1.84" long—for Ill. #17, 46
86	111056	Spring—Landing lever—0.187" O. D. x 0.75" long—for Ill. #44
87	110963	Spring—Intermix—0.195" O. D. x 1.02" long—for Ill. #48
88	110964	Spring—Support lever—0.190" O. D. x 0.50" long—for Ill. #45
89	110965	Spring—Selector lever—0.190" O. D. x 0.61" long—for Ill. #43
90	110966	Spring—Speed shift knob—two active turns—0.016 wire diameter—0.12" I. D.—for Ill. #22
93	79240	Washer—0.140" I. D.—0.300" O. D., 0.010" thick—for Ill. #42, 56
94		Screw—Turntable support—#8 x 0.19" long—for #26
95		Screw—Terminal board—#6 x .25" long—for Ill. #59
96		Screw—#6 x .62" long—for Ill. #60
97		Screw—#4 x 40, .38" long—for Ill. #49
98		Screw—Intermix selector—#6-32, 0.75" long—for Ill. #48
99	106620	Grommet—Motor and speed control lever—Ill. #19, 50
100		Grommet—Motorboard—Ill. #6
109		Spacer—Knob
110		Washer—Adjusting screw—0.172" I. D., 0.500" O. D., 0.018" thick—for Ill. #67
112	110967	Lever—Index
113	110968	Stud—Lever index—for Ill. #112
114	78649	Washer—Pickup arm lever—for Ill. #54
115		Wire—1.5" long—for Ill. #59
116		Washer—0.156" I. D., 0.375" O. D.—for Ill. #60
117		Washer—Landing lever assembly—0.515 I. D., 0.75 O. D.—for Ill. #44
119		Washer—Spring—0.260" I. D., 7/16" O. D.—for Ill. #113
120		Lug—Mounting spring—for Ill. #61
121	75740	Washer—Motor—0.190" I. D. 3/8" O. D., 0.0299" thick—for Ill. #19, 48
122	75752	Washer—Pickup arm torque spring—0.500" O. D., 0.252" I. D., 0.015" thick—for Ill. #68
123	100173	Washer—"C" type retaining—0.230" O. D., 0.094" I. D.—for Ill. #47
125		Bushing—Knob—for Ill. #22
127		Pin—Stabilizer arm
129		Lug—Connector—for Ill. #60
131	78652	Washer—"C" type retaining—for Ill. #67

APPLY TO YOUR RCA DISTRIBUTOR FOR PRICES OF REPLACEMENT PARTS

RCA Victor (Material continued) **RP-217 Series, RP-218 Series**

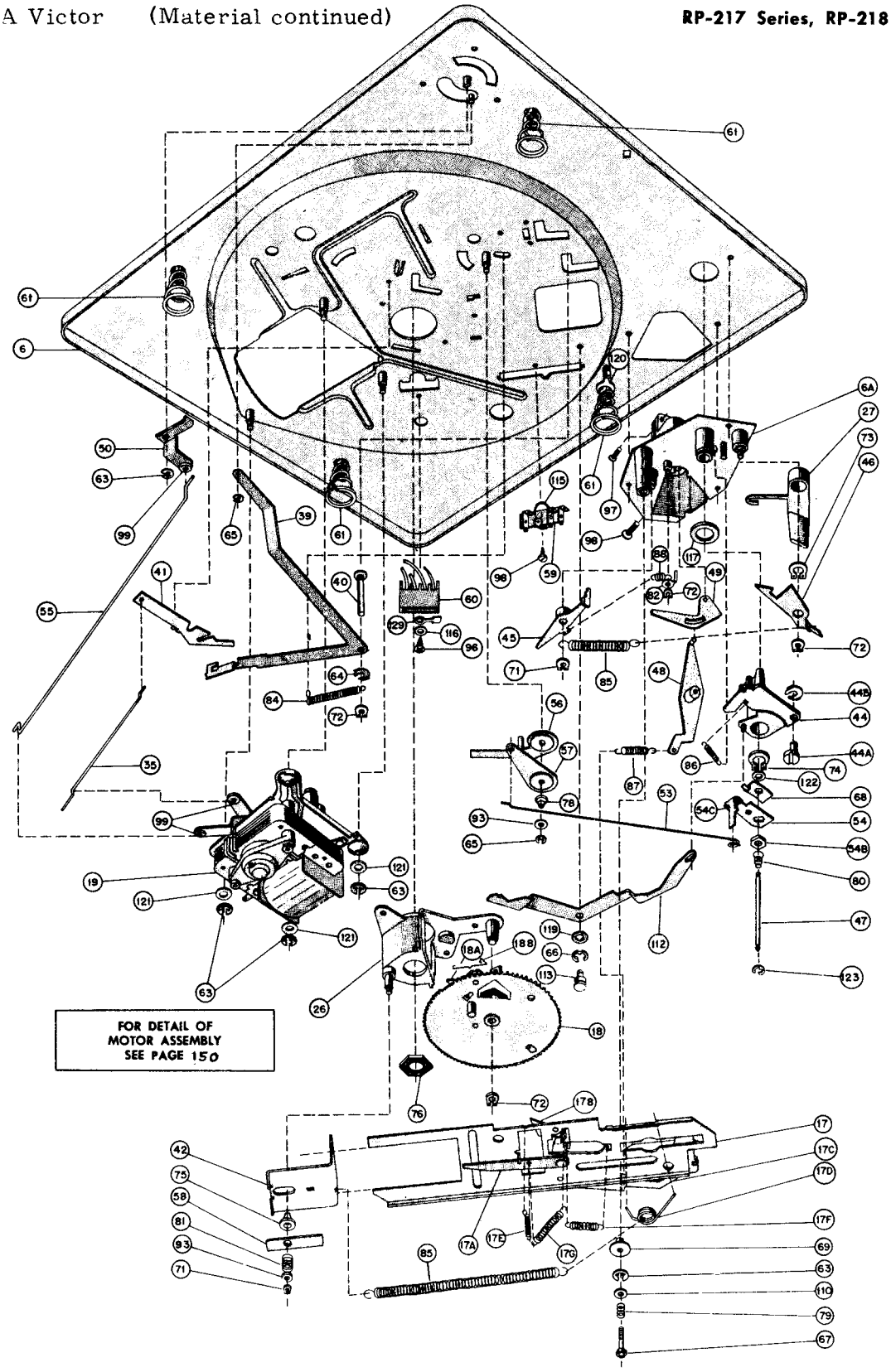

Figure 35—Exploded View RP-217-1 Bottom

SAMPSON MODEL BT 85

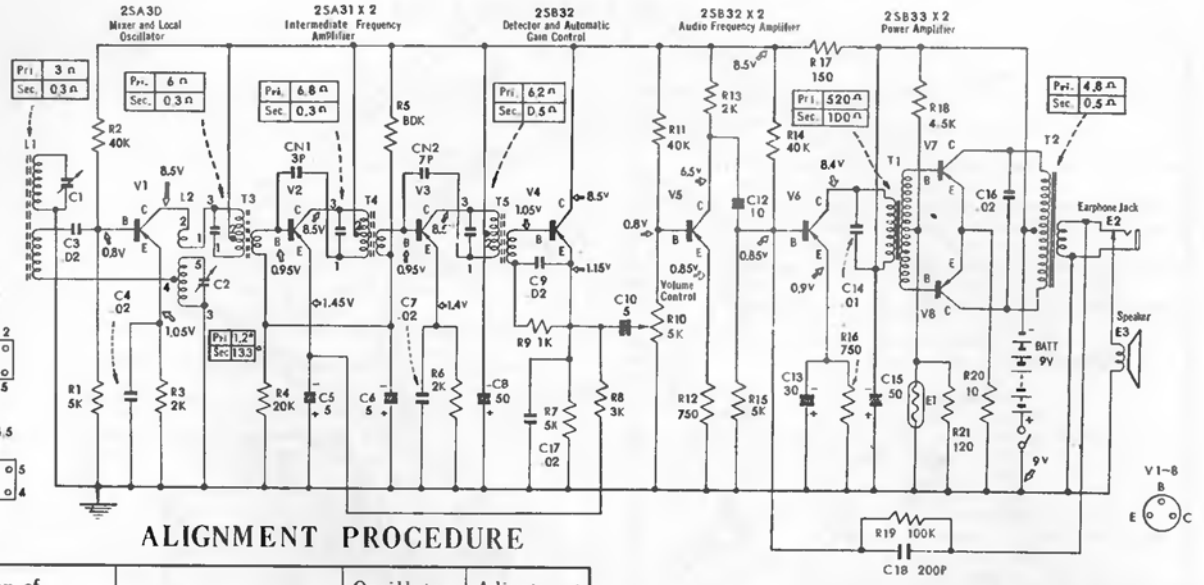

ALIGNMENT PROCEDURE

Order of Adjustment	Dial pointer Setting	Oscillator Frequency	Adjustment Point
1.	Gang fully open	455KC	T5
2.	Gang fully open	455KC	T4
3.	Gang fully open	455KC	T3
4.		Repeat	5-3

Order of Adjustment	Dial pointer Setting	Oscillator Frequency	Adjustment Point
5.	Gang fully open	530KC	L2
6.	Gang fully open	1650KC	C2
7.			Repeat 5 and 6
8.	600KC	600KC	Adjust L1 position
9.	1400KC	1400KC	C1

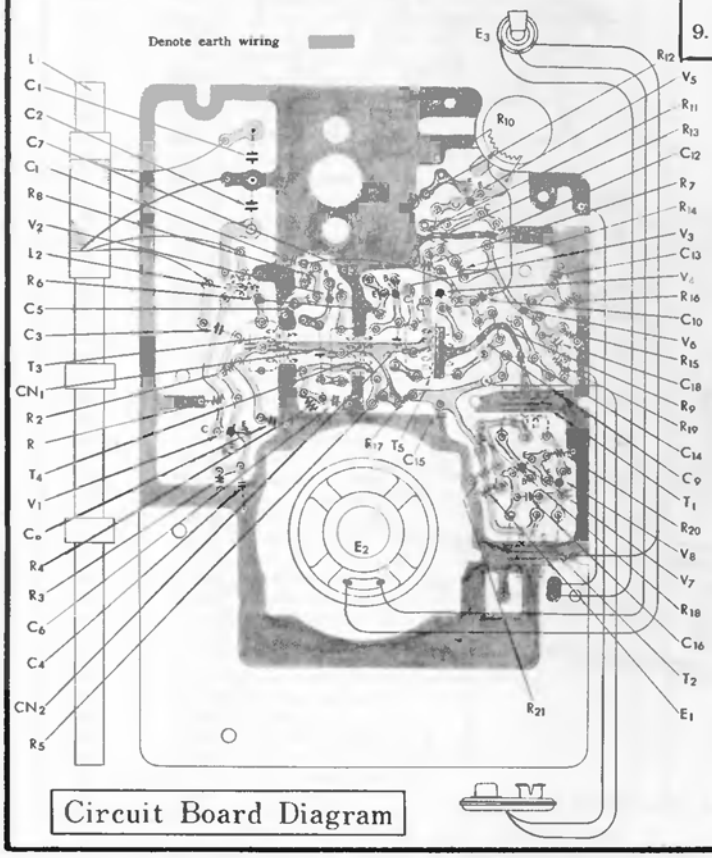

Circuit Board Diagram

C_{14} – 0.01μfd., Ceramic Capacitor
$C_{3,4,7,9,16,17}$ – 0.02μfd., Ceramic Capacit
C_{18} – 200μμfd., Ceramic Capacitor
$C_{5,6,10}$ – 3V, 5μfd., Elec. Capacitor
C_{13} – 3V 30μfd., Elec. Capacitor
C_{12} – 10V, 10μfd., Elec. Capacitor
$C_{8,15}$ – 10V, 50μfd., Elec. Capacitor
R_{20} – 10 Ohm, ¼W. Res.
R_{21} – 120 Ohm, ¼W. Res.
R_{17} – 150 Ohm, ¼W. Res.
$R_{12,16}$ – 750 Ohm, ¼W. Res.
R_8 – 3,000 Ohm, ¼W. Res.
$R_{3,6,13}$ – 2,000 Ohm, ¼W. Res.
R_9 – 1,000 Ohm, ¼W. Res.
R_{18} – 4,500 Ohm, ¼W. Res.
$R_{1,7,15}$ – 5,000 Ohm, ¼W. Res.
R_4 – 20,000 Ohm, ¼W. Res.
$R_{2,11,14}$ – 40,000 Ohm, ¼W. Res.
R_5 – 80,000 Ohm, ¼W. Res.
R_{19} – 100,000 Ohm, ¼W. Res.
R_{10} – 5,000 Ohm, Volume Control
V_1 – 2SA30 Transistor
$V_{2,3}$ – 2SA31 Transistor
$V_{4,5,6}$ – 2SA32 Transistor
$V_{7,8}$ – 2SA33 Transistor
E_1 – KD-13 Thermistor

SYLVANIA Amplifier Chassis 400-1, -2

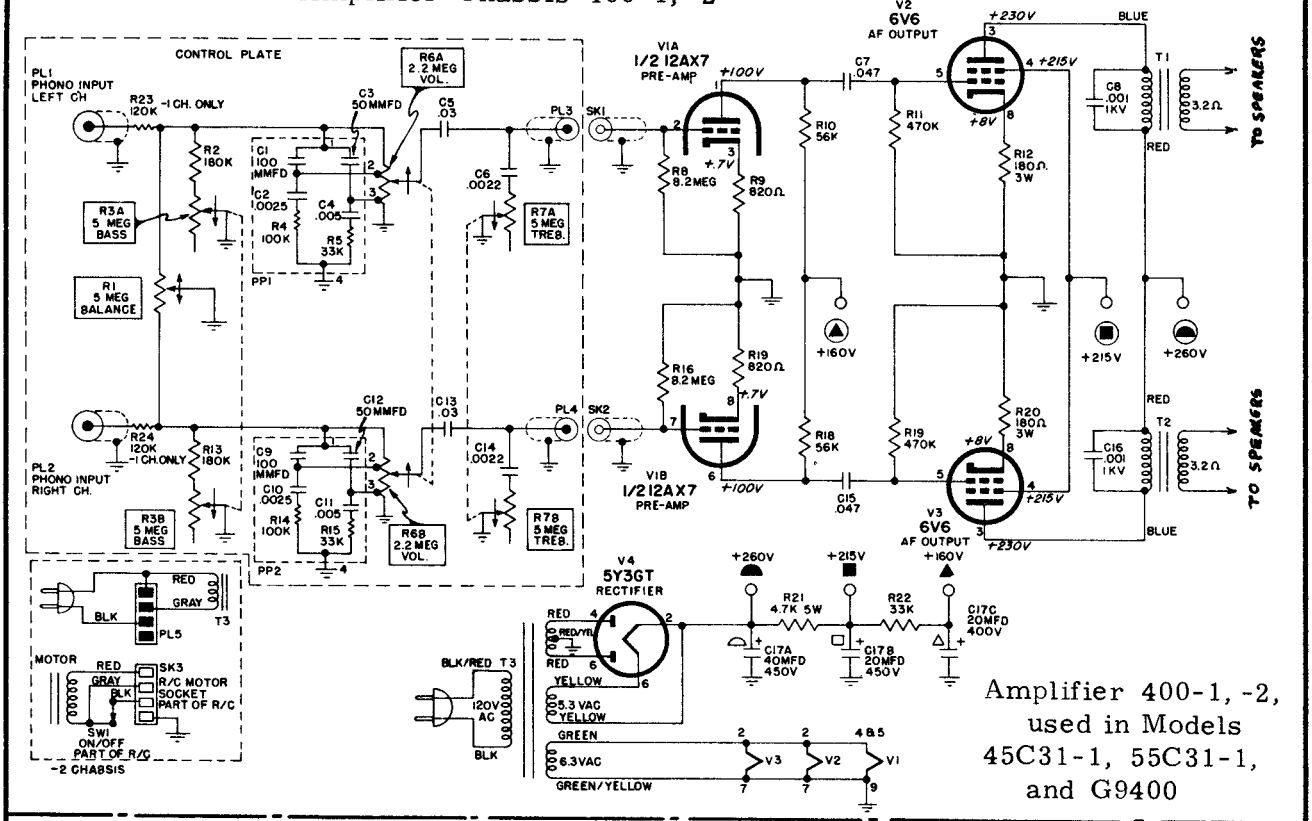

Amplifier 400-1, -2, used in Models 45C31-1, 55C31-1, and G9400

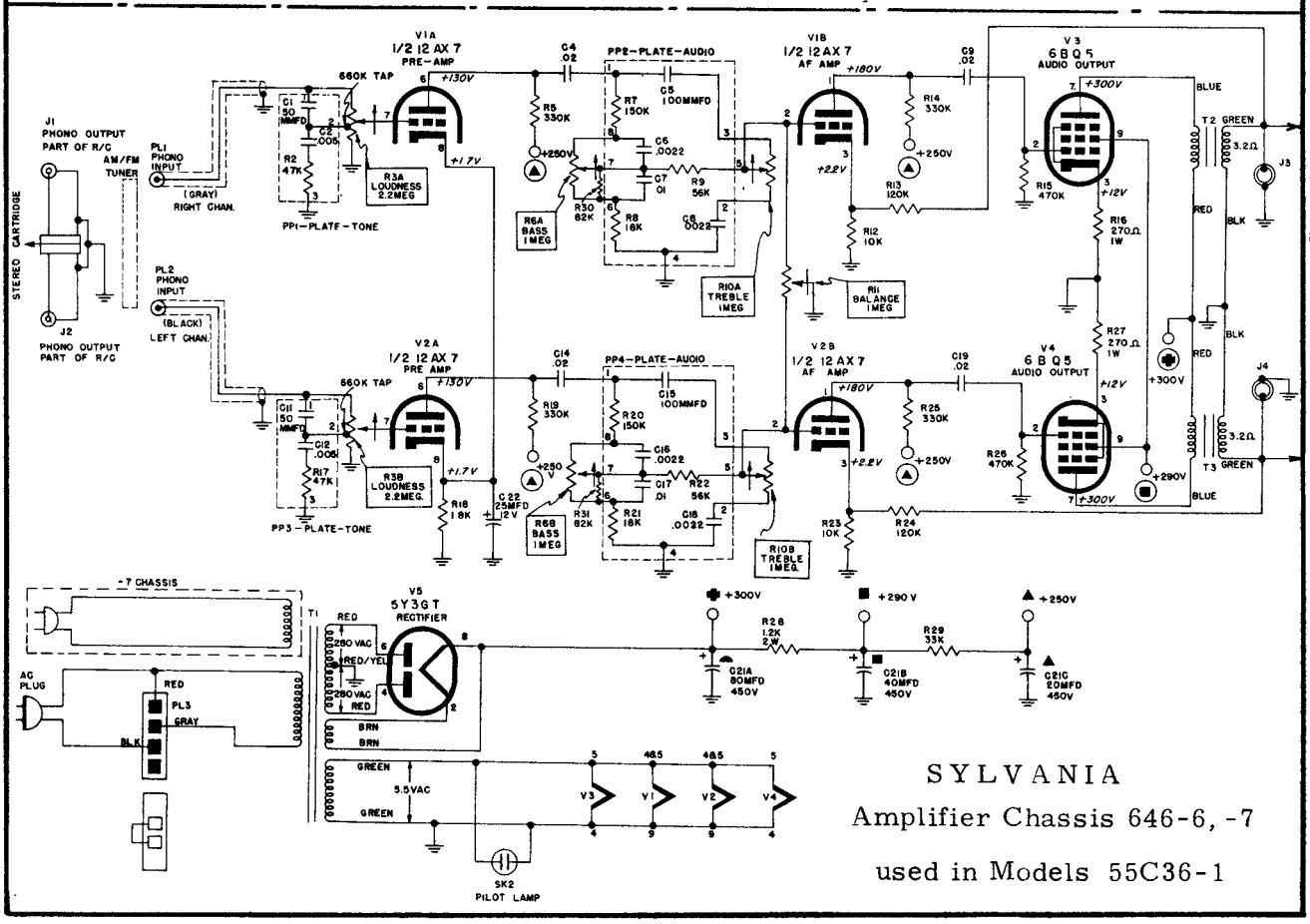

SYLVANIA
Amplifier Chassis 646-6, -7
used in Models 55C36-1

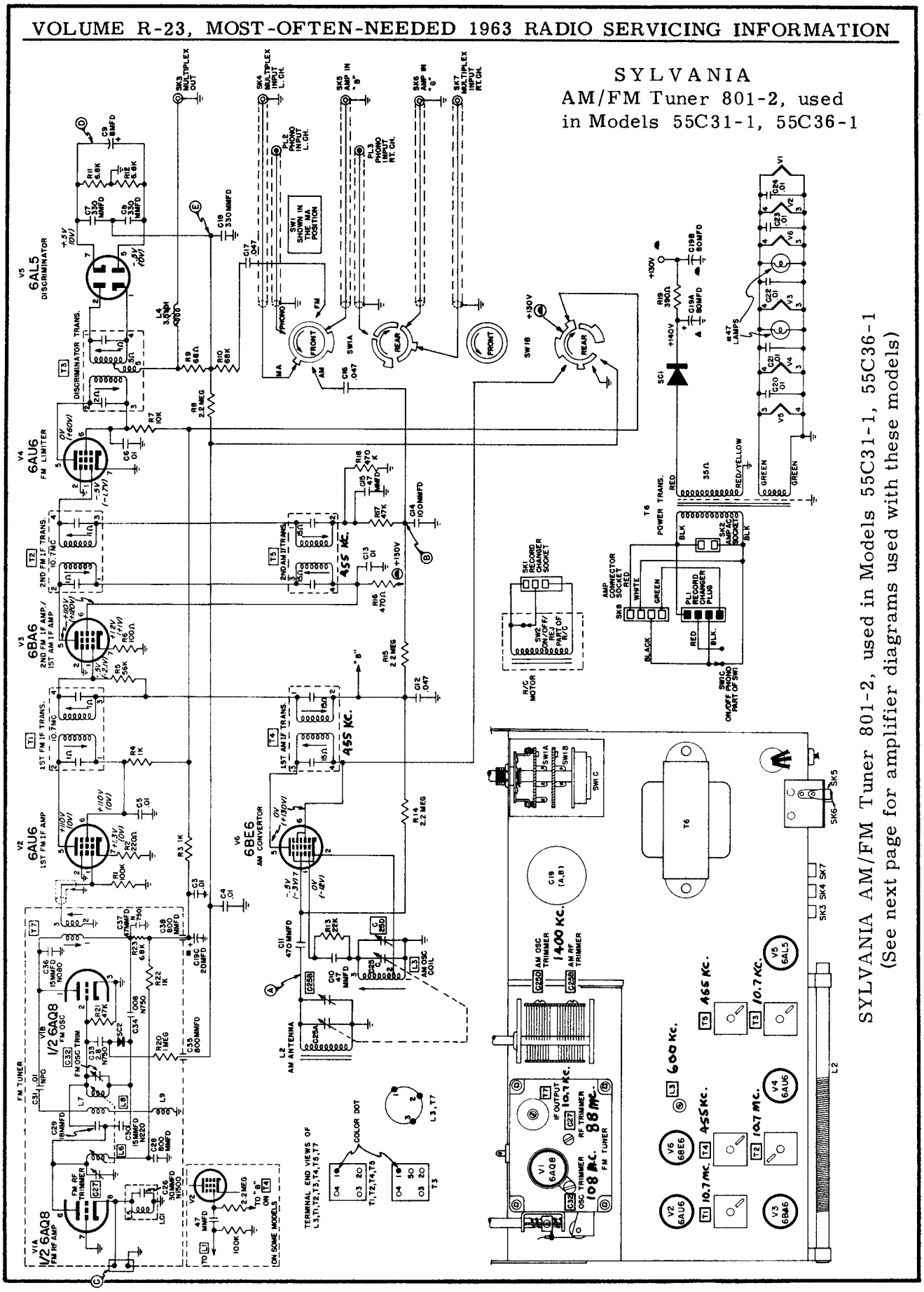

SYLVANIA AM/FM Tuner 801-2, used in Models 55C31-1, 55C36-1
(See next page for amplifier diagrams used with these models)

SYLVANIA

CHASSIS 696-3
MODELS FT24

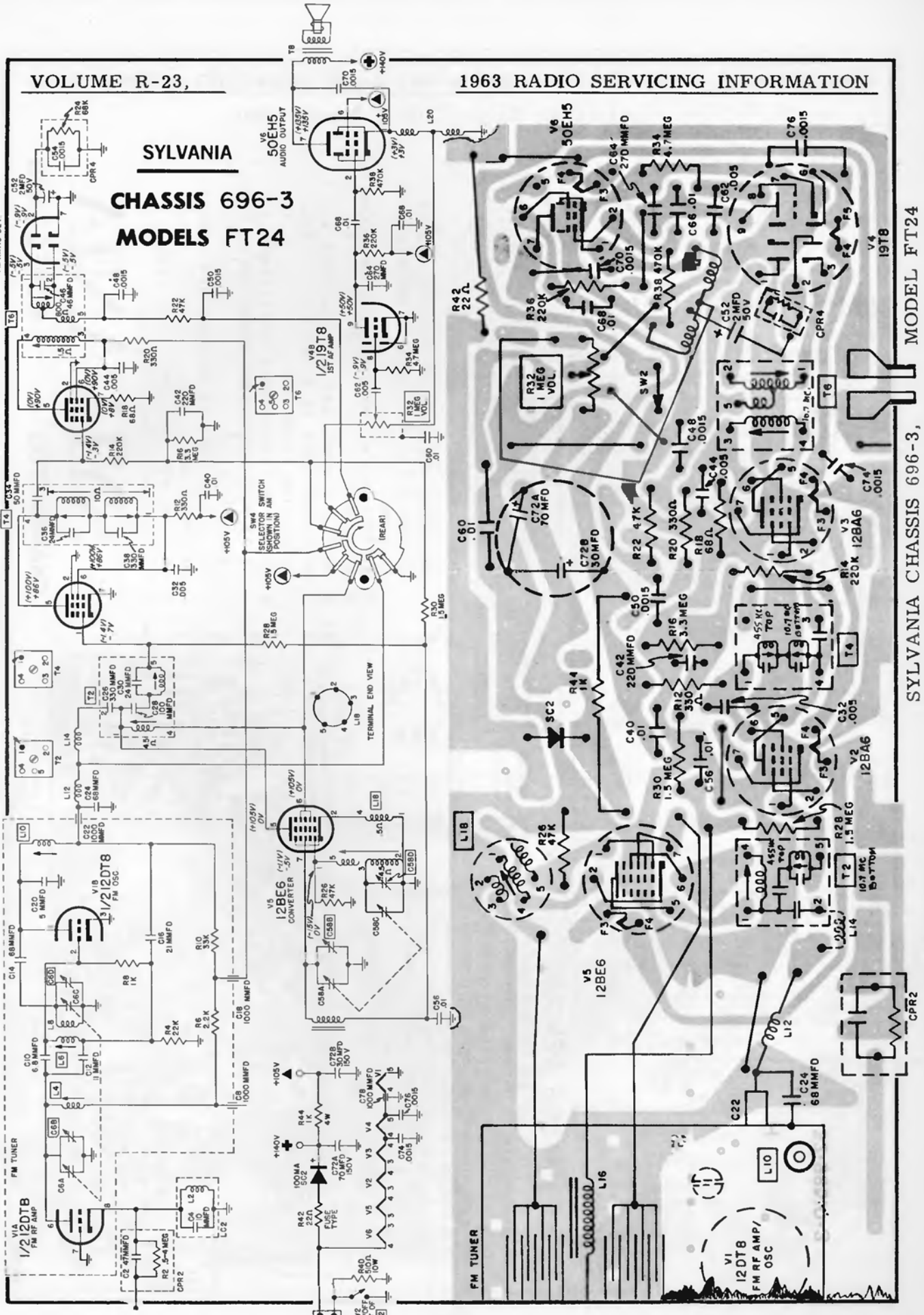

SYLVANIA CHASSIS 696-3, MODEL FT24

SYLVANIA Chassis 700-4, Model TH20

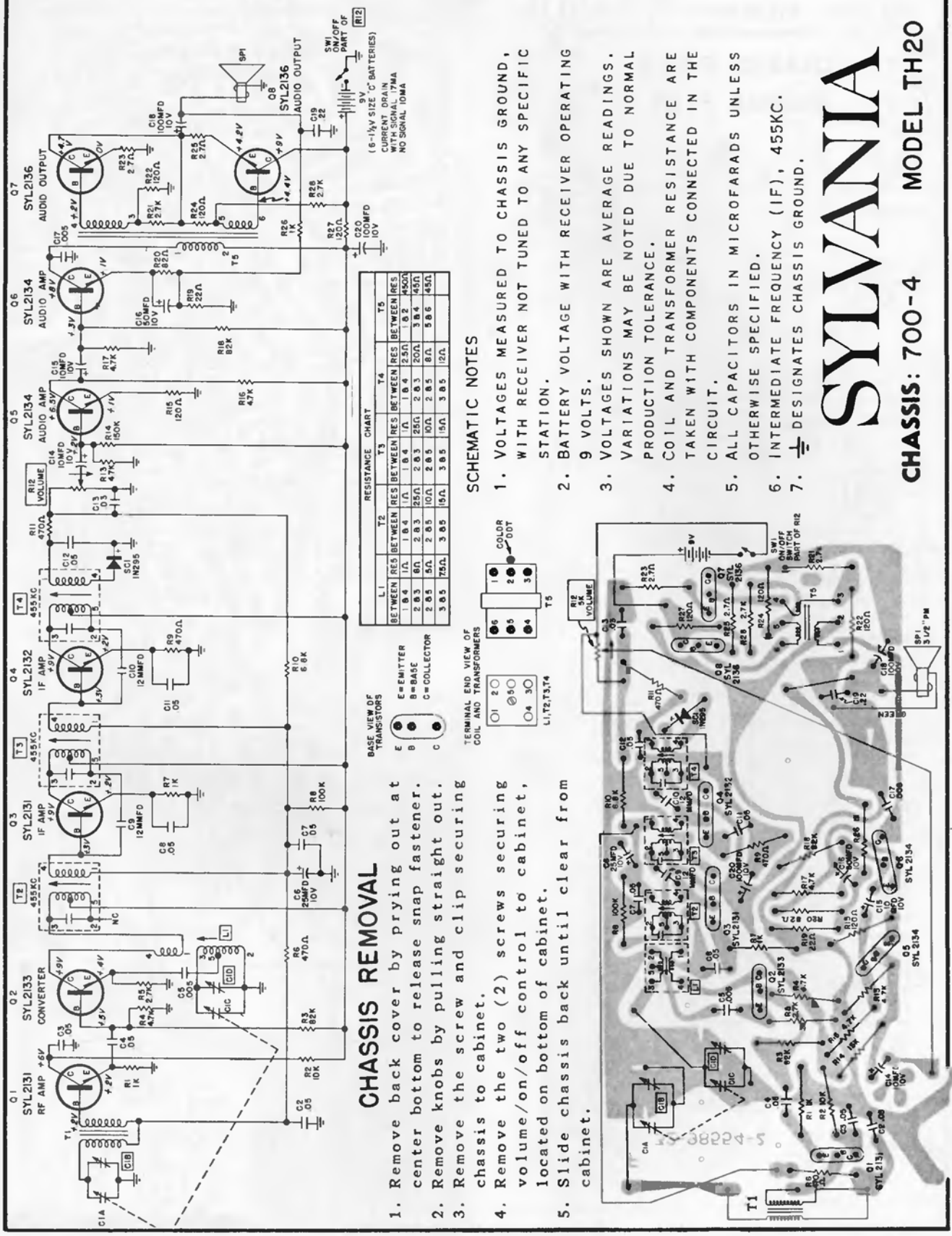

RESISTANCE CHART													
L1		T2		T3		T4			T5				
BETWEEN	RES	BETWEEN	RES	BETWEEN	RES	BETWEEN	RES	RES	BETWEEN	RES	BETWEEN	RES
1 & 4	1Ω	1 & 4	1Ω	1 & 4	1Ω	1 & 4	2.5Ω	1 & 2	450Ω
2 & 3	8Ω	2 & 3	25Ω	2 & 3	25Ω	2 & 3	20Ω	3 & 4	45Ω
2 & 5	5Ω	2 & 5	10Ω	2 & 5	10Ω	2 & 5	8Ω	5 & 6	45Ω
3 & 5	75Ω	3 & 5	15Ω	3 & 5	15Ω	3 & 5	12Ω		

CHASSIS REMOVAL

1. Remove back cover by prying out at center bottom to release snap fastener.
2. Remove knobs by pulling straight out.
3. Remove the screw and clip securing chassis to cabinet.
4. Remove the two (2) screws securing volume/on/off control to cabinet, located on bottom of cabinet.
5. Slide chassis back until clear from cabinet.

SCHEMATIC NOTES

1. VOLTAGES MEASURED TO CHASSIS GROUND, WITH RECEIVER NOT TUNED TO ANY SPECIFIC STATION.
2. BATTERY VOLTAGE WITH RECEIVER OPERATING 9 VOLTS.
3. VOLTAGES SHOWN ARE AVERAGE READINGS. VARIATIONS MAY BE NOTED DUE TO NORMAL PRODUCTION TOLERANCE.
4. COIL AND TRANSFORMER RESISTANCE ARE TAKEN WITH COMPONENTS CONNECTED IN THE CIRCUIT.
5. ALL CAPACITORS IN MICROFARADS UNLESS OTHERWISE SPECIFIED.
6. INTERMEDIATE FREQUENCY (IF), 455KC.
7. ⏚ DESIGNATES CHASSIS GROUND.

SYLVANIA

CHASSIS: 700-4 MODEL TH20

SYLVANIA Chassis 701-2, Models SC25 Series

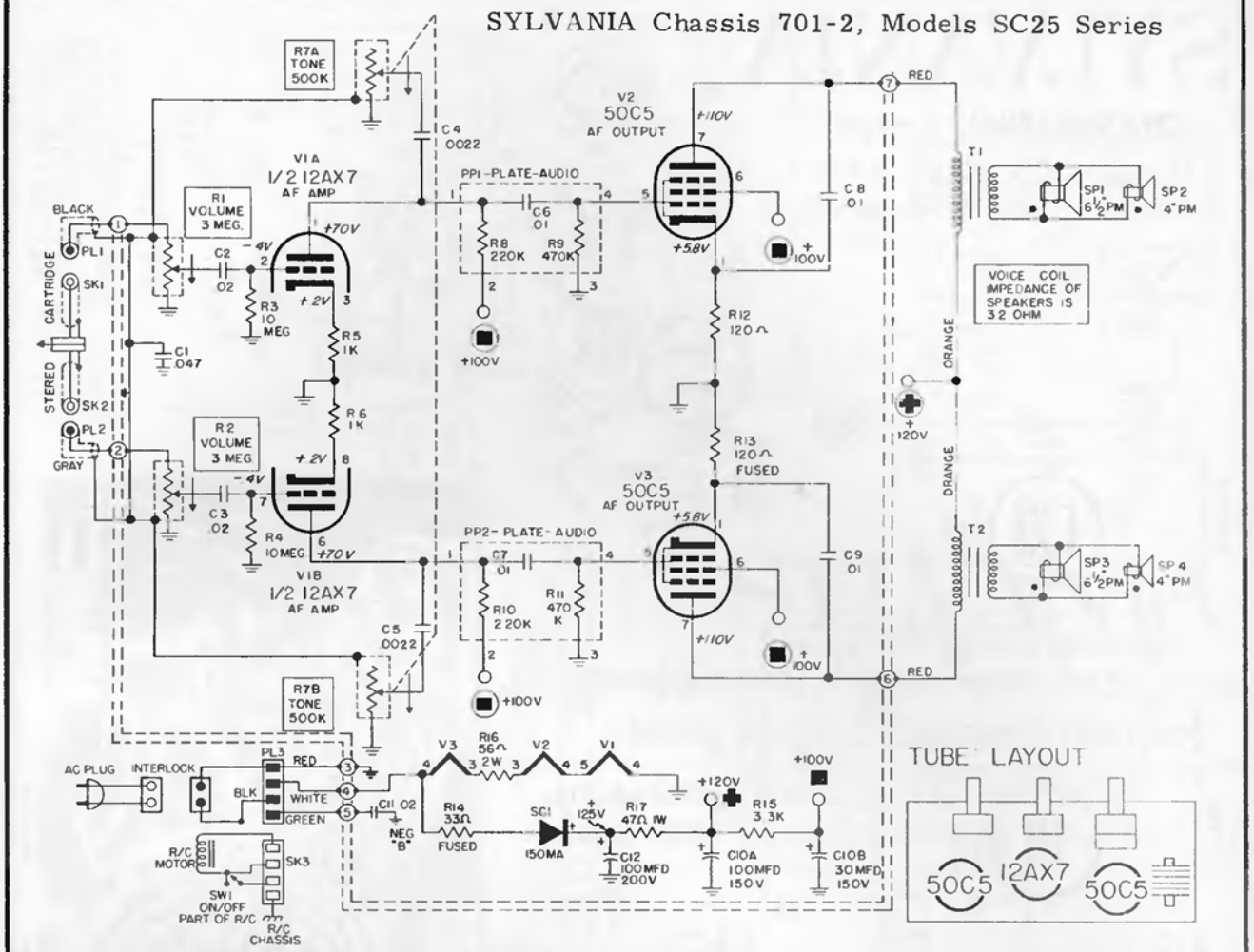

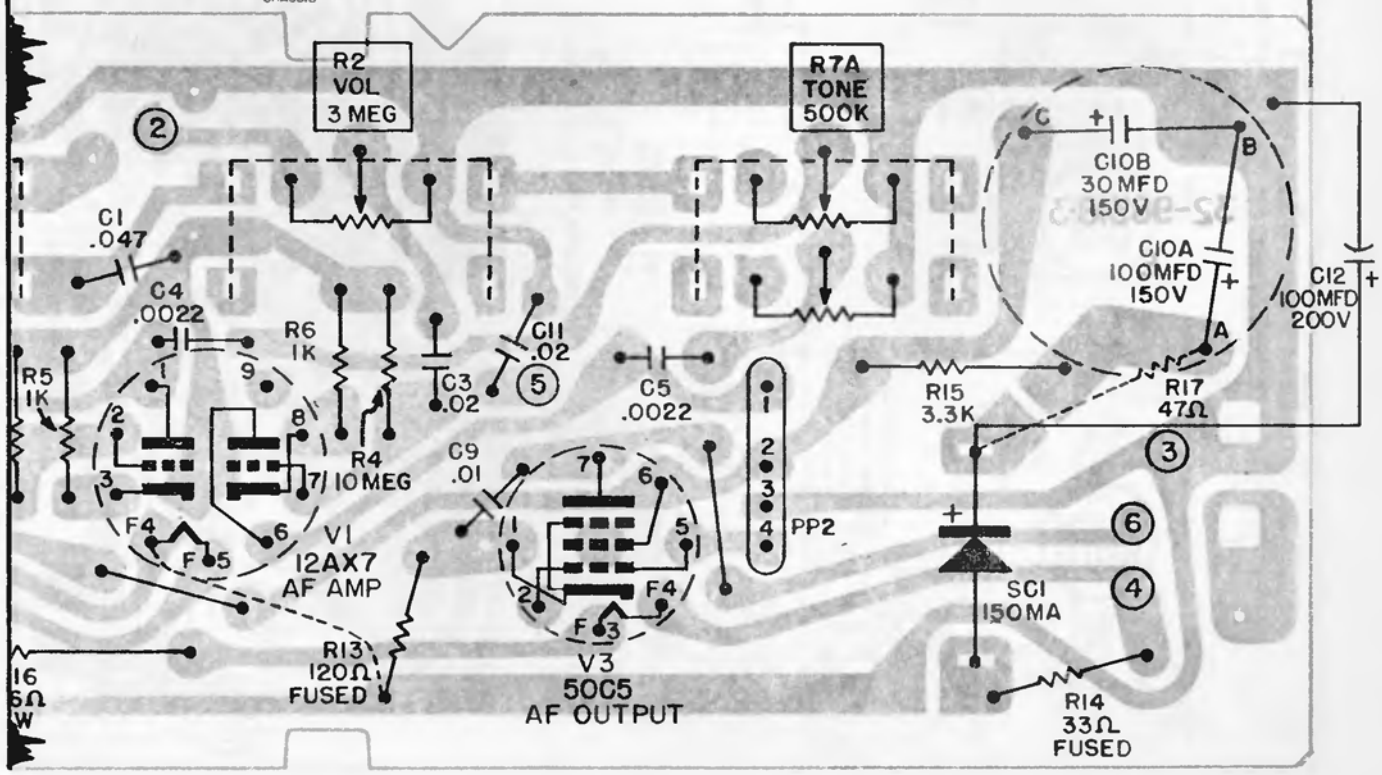

SYLVANIA

CHASSIS: 711-1,-2,-3,-5

Models AK19, AK20, AT20, AK21, AT21, AK22, AK23

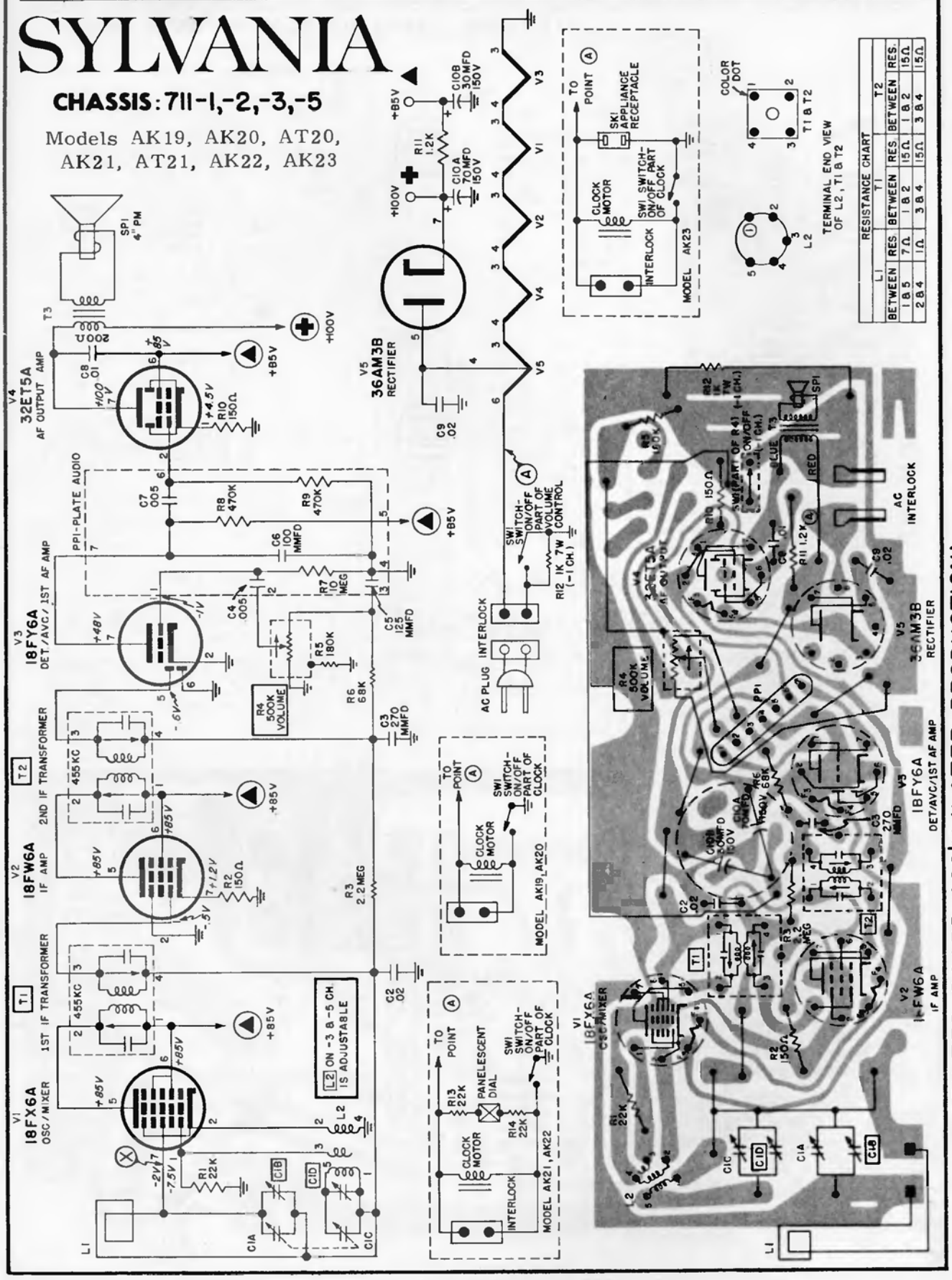

PRINTED BOARD ASS'Y. (LATER PRODUCTION)

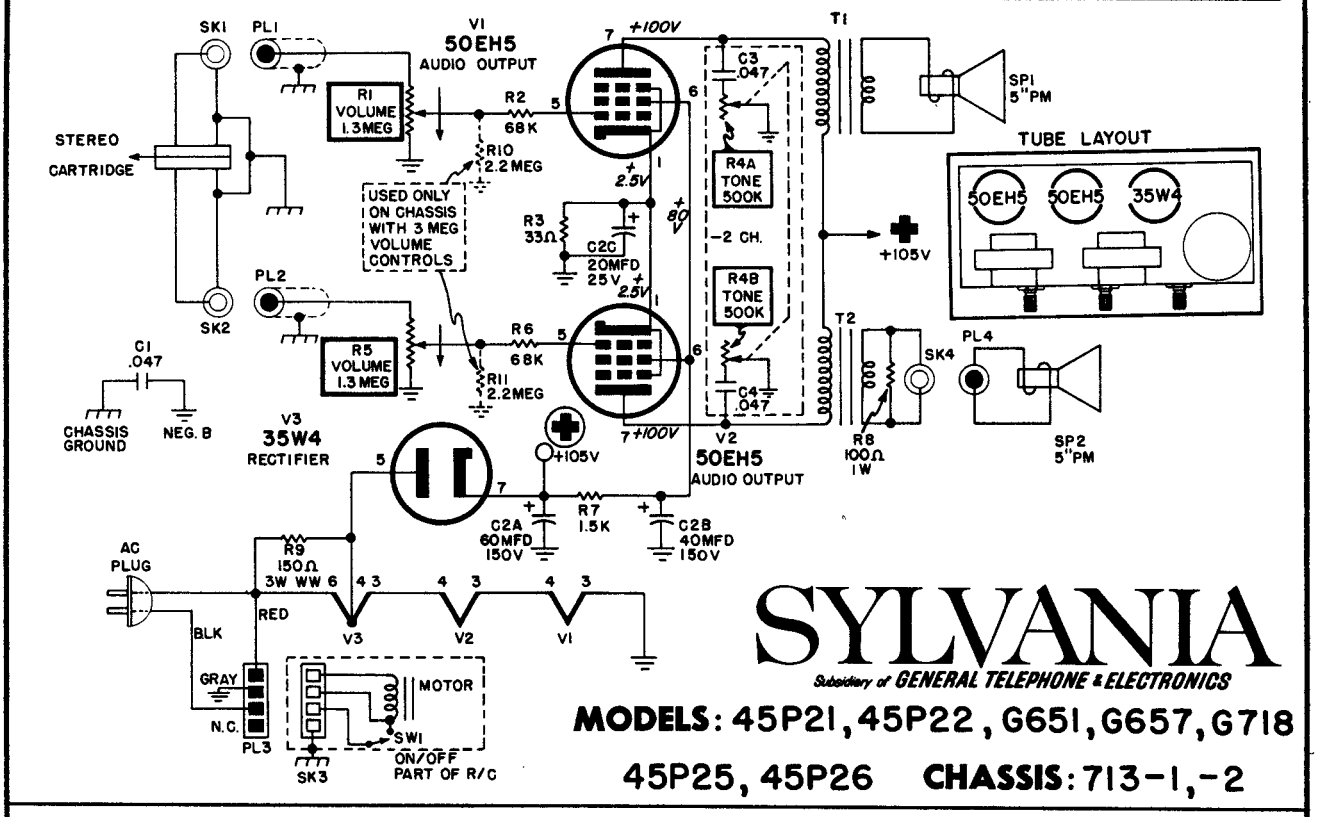

SYLVANIA

Subsidiary of **GENERAL TELEPHONE & ELECTRONICS**

MODELS: 45P21, 45P22, G651, G657, G718

45P25, 45P26 CHASSIS: 713-1,-2

CHASSIS: 701-1,-2

MODELS: Y45C20, G9200

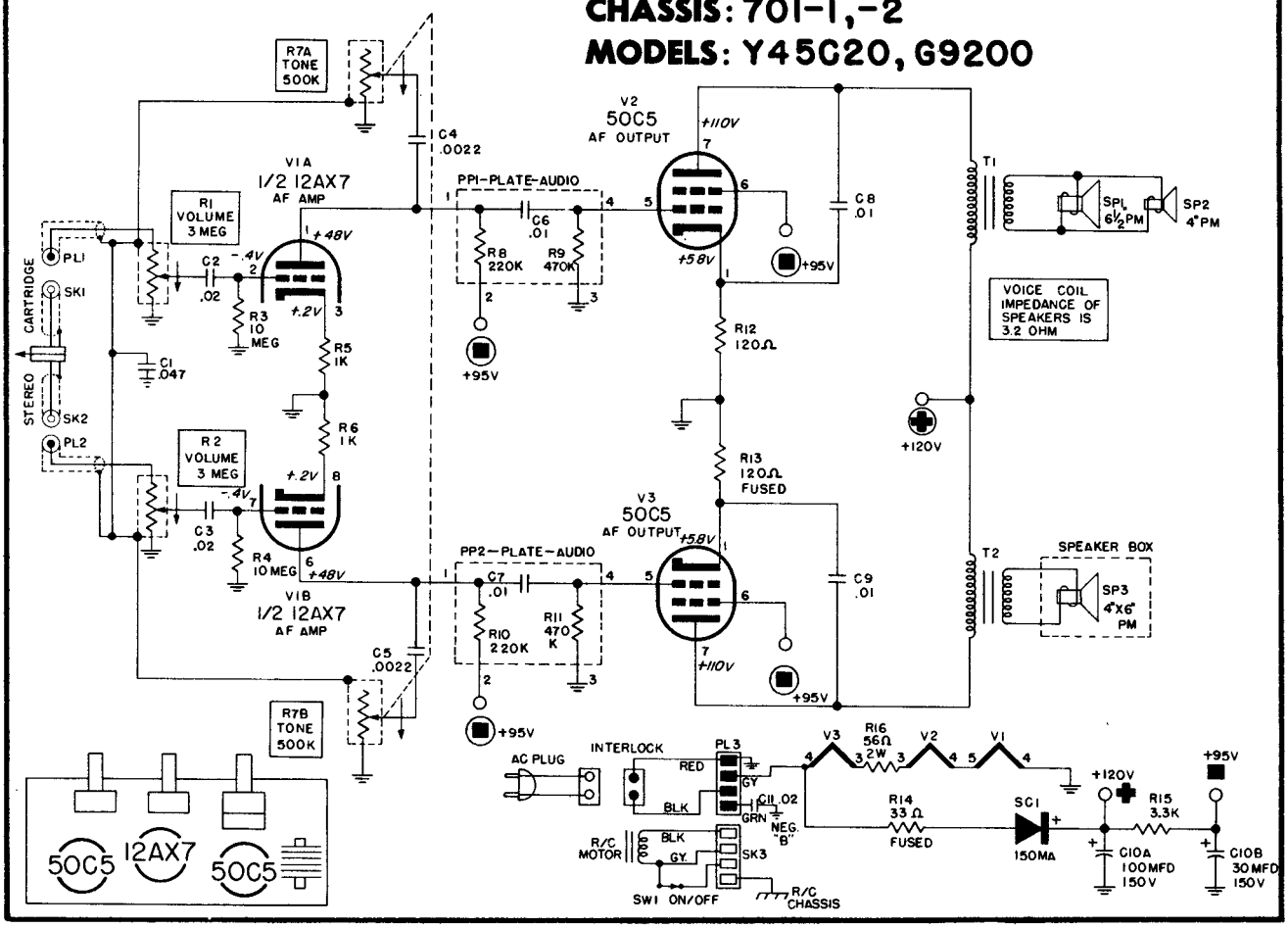

WEBCOR

Model 1296

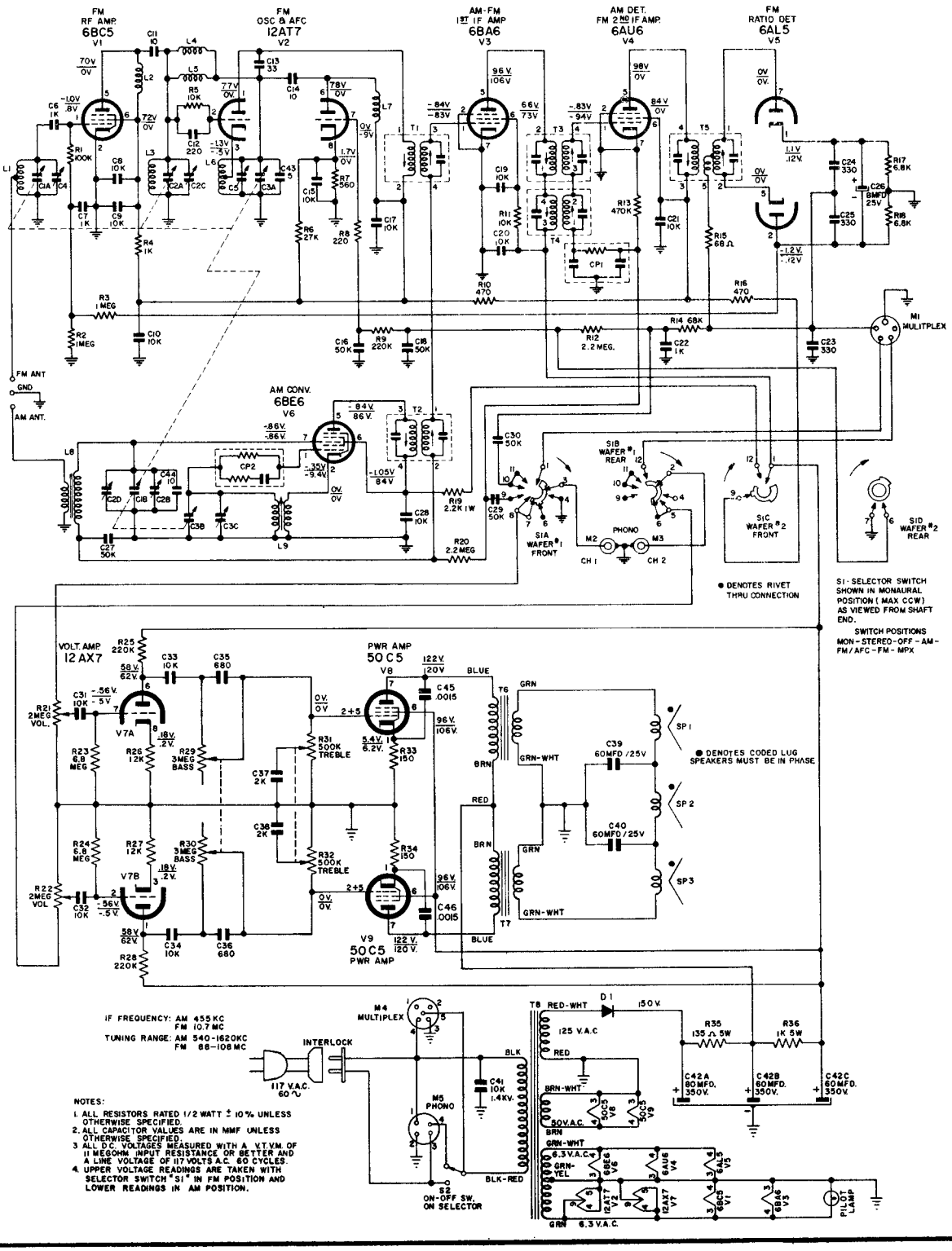

Westinghouse

MODEL H-782T4
CHASSIS V-2420-3

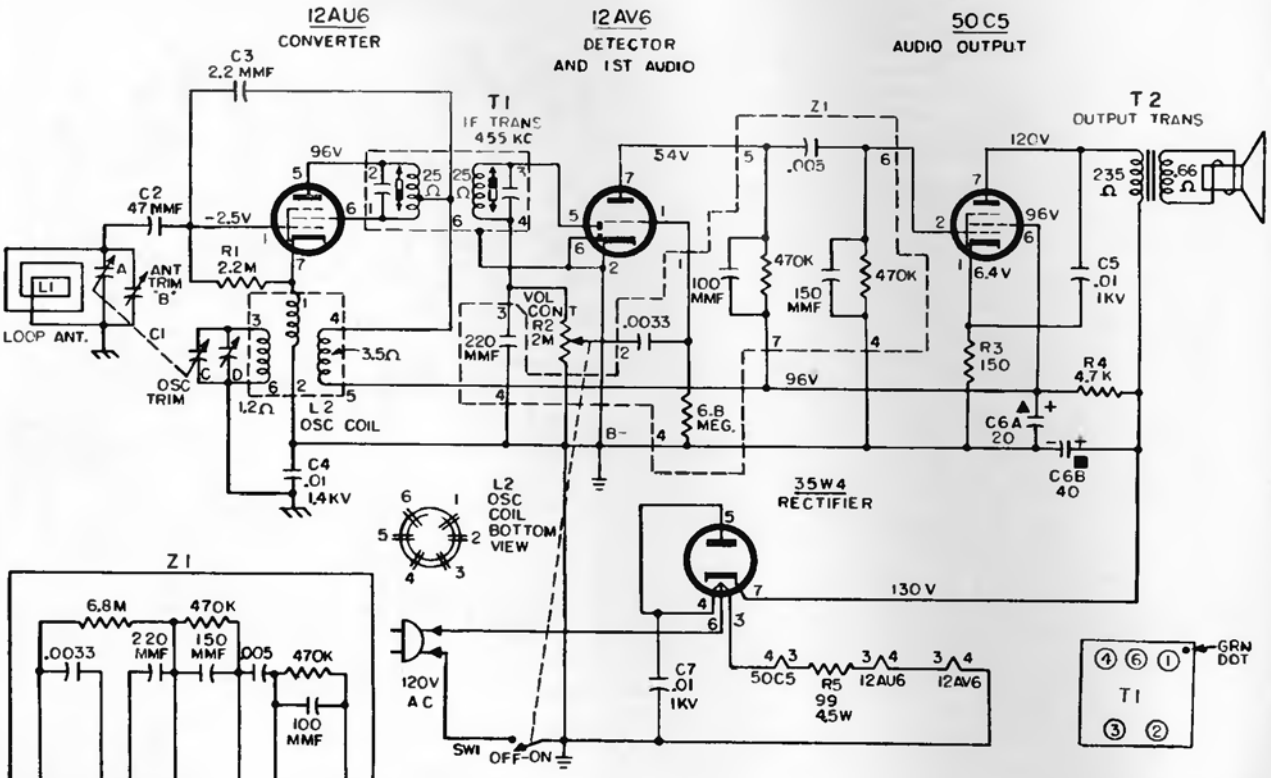

NOTES:

1. ALL RESISTANCE VALUES IN OHMS 1/2 WATT, ALL CAPACITANCE VALUES IN MFD UNLESS OTHERWISE STATED.
2. ALL VOLTAGES MEASURED FROM B-TO POINTS INDICATED WITH V.T.V.M. LINE VOLTAGE SET AT 120 VAC. READINGS SHOULD BE AS SHOWN ±20%.
3. CHASSIS GROUND ⏚
   B- ⏚

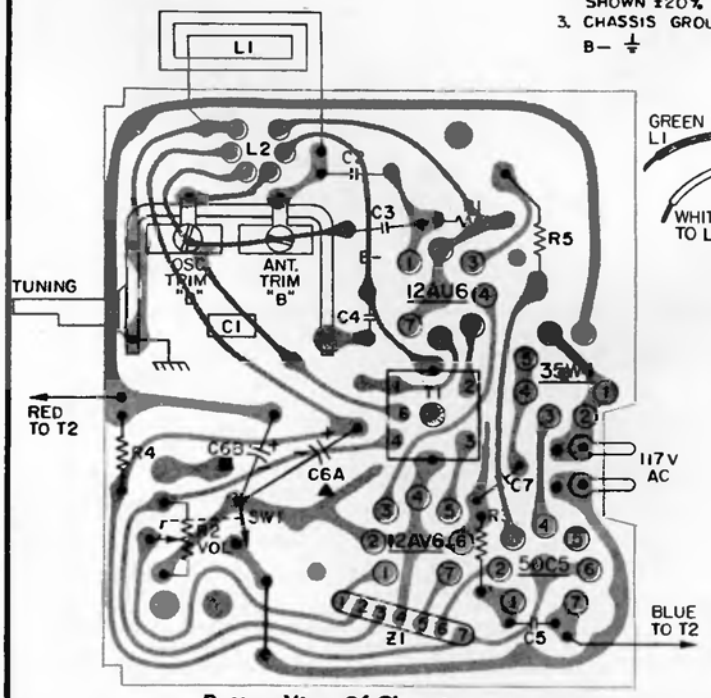

Bottom View Of Chassis

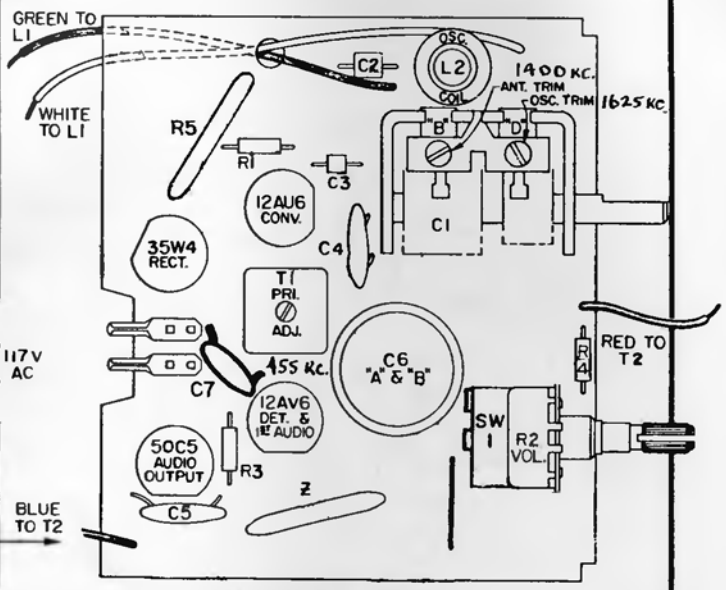

Top View Of Chassis

WESTINGHOUSE
Models H-820L5, 821L5
Chassis V-2395-8

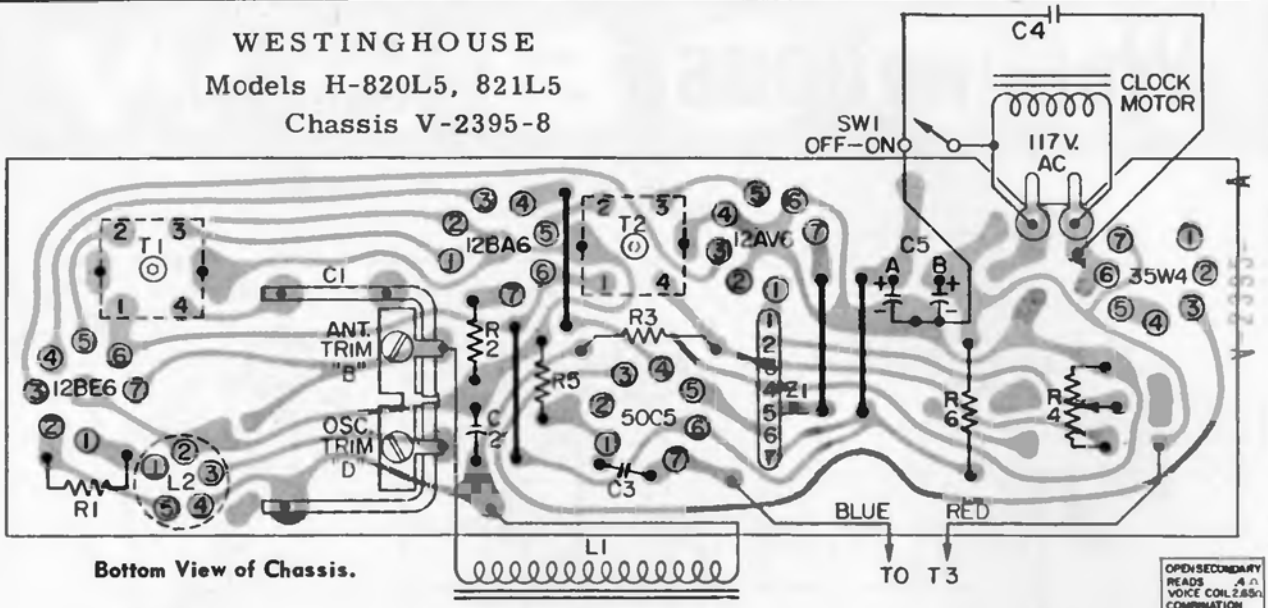

Bottom View of Chassis.

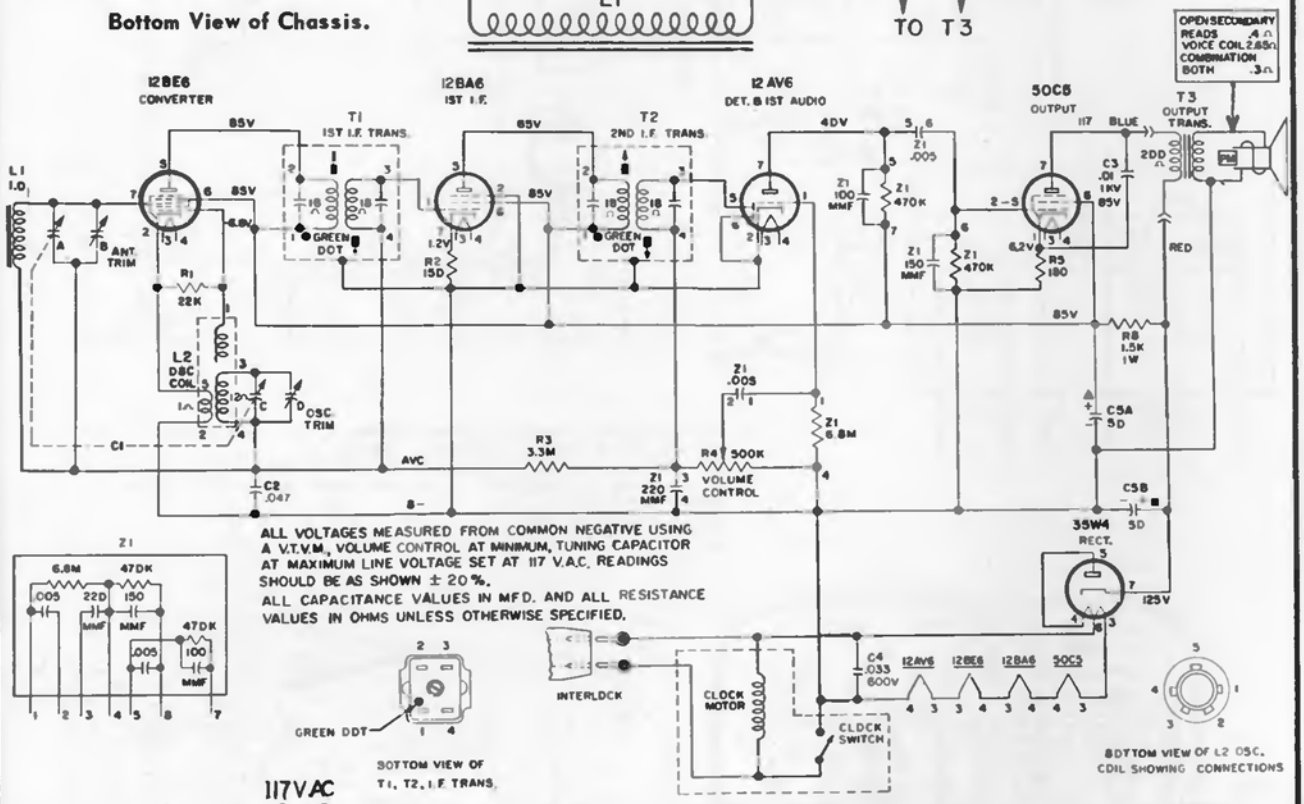

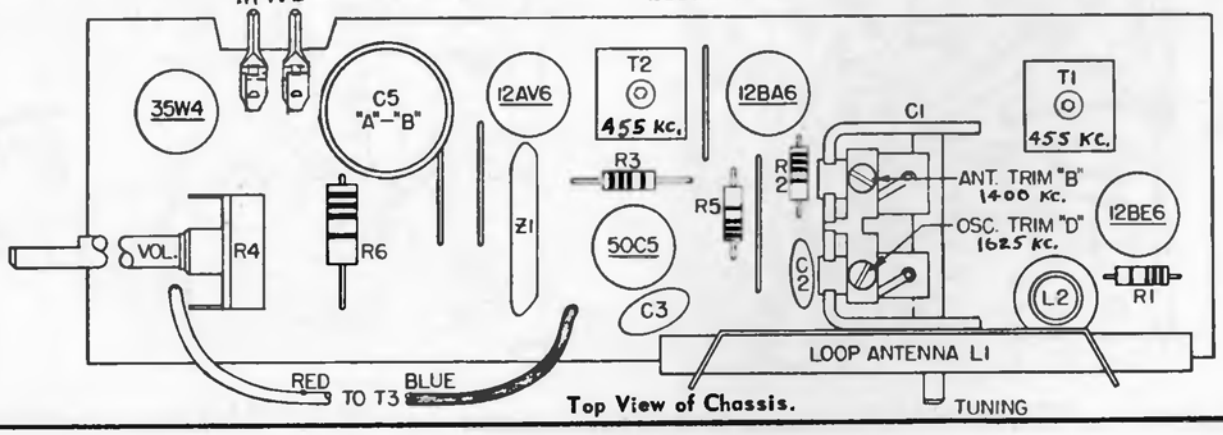

Top View of Chassis.

WESTINGHOUSE
Model H-793P6GPA
Chassis V-2397-6

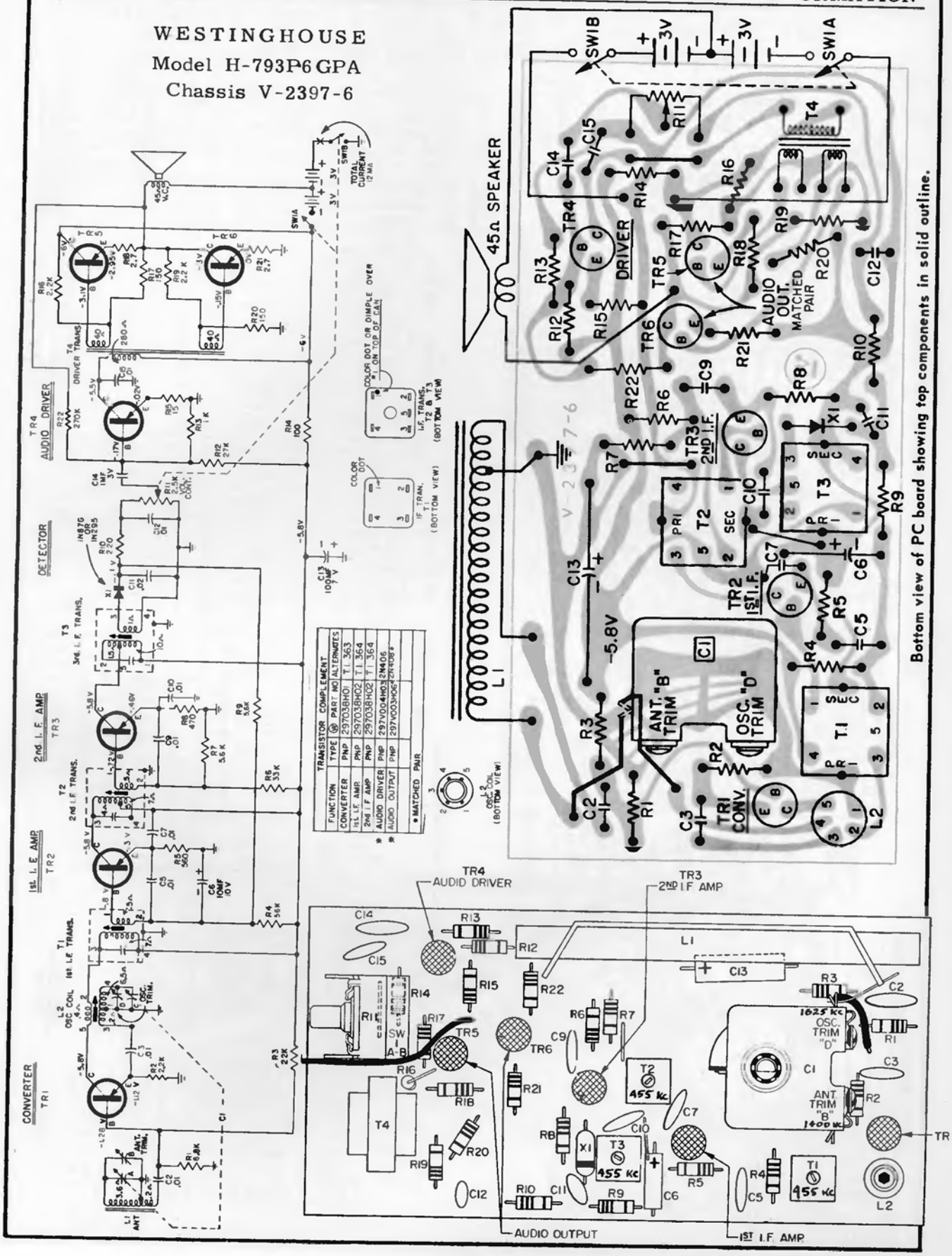

WESTINGHOUSE Chassis V-2399-6, Models H-712P9A, H-713P9A

(Alignment Information on the next page at right)

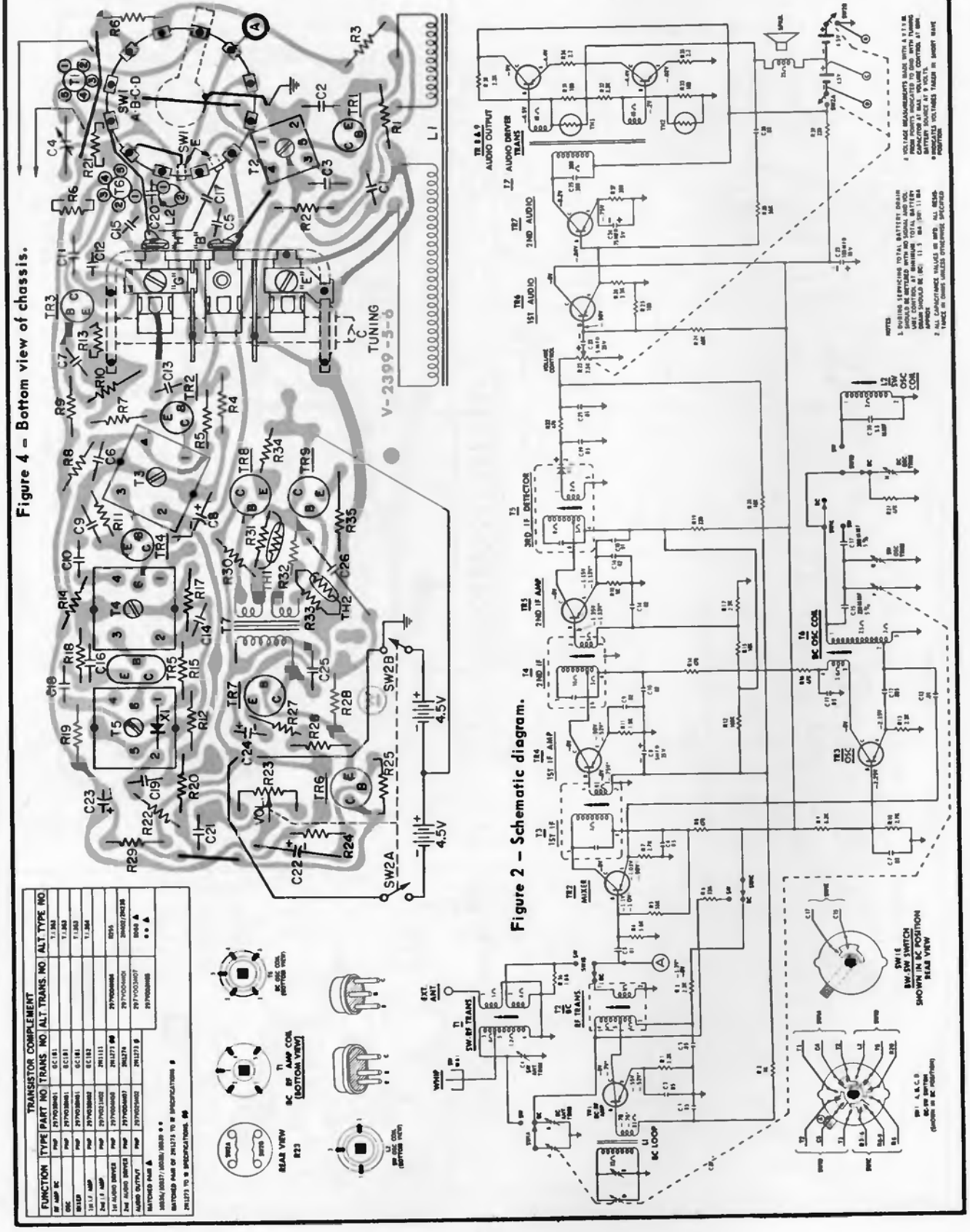

WESTINGHOUSE Chassis V-2399-6, Models H-712P9A, H-713P9A, Continued

SIGNAL GENERATOR – Use generator which provides modulated 455KC, 530-1600KC and 2.4-7.5MC frequencies. Signal output should be modulated 30%. Keep output low enough to just give an indication to avoid AVC action.
INDICATOR – Connect VTVM across speaker voice coil.
ALIGNMENT TOOLS – Use insulated aligning tool that snugly fits slots in ferrite cores to prevent chipping of ferrite. A square tool (see figure 5) is required for all slug adjustments.

RECEIVER – Remove chassis, speaker and battery holder from cabinet. The dial background must be removed from chassis. Locate speaker close to chassis and T1. Be sure batteries are at rated voltage (under load). Set volume control to maximum. The oscillator adjustments are critical and therefore screws and slugs should be rotated very slowly to exact alignment point. Be sure during RF alignment that hand or any metal objects on bench do not come in close contact with antenna loop.

Step	*Connect Signal Generator To:*	*Generator Frequency*	*C27 Setting*	*SW1 Setting*	*Adjust For Maximum:*
1.	Test point "A" (T.P. "A")	455KC	open	BC	Top slugs of T5, T4 & T3 in order. (Reduce generator output if necessary for T4 & T3 adjustments)
2.	"	6.5MC	"	SW	Rotate C27G maximum clockwise then back-off 1/2 turn. Adjust L2.
3.	"	7.41MC	"	"	Increase generator output until image signal is heard. If not heard, oscillator is tuned to low side of incoming signal and L2 must be rotated counter-clockwise until image signal is heard.
4.	"	6.5MC	"	"	C27G
5.	"	2.4MC	closed	"	L2
6.	Repeat steps 4 and 5 until no further change is noted.				
7.	Test point "A"	1625KC	open	BC	C27H
8.	"	530KC	closed	"	T6
9.	Repeat steps 7 and 8 until no further change is noted.				
10.	Lead from T1 through 15 mmf capacitor.	5.8MC	Tune until signal is heard.	SW	C4
11.	"	2.6MC	"	"	T1
12.	Repeat steps 10 and 11 until no further change is noted.				
13.	Lead from L1 through 200 mmf capacitor.	1400KC	Tune until signal is heard.	BC	C27E and C27B
14.	"	600KC	"	"	T2
15.	"	1400KC	"	"	C27B

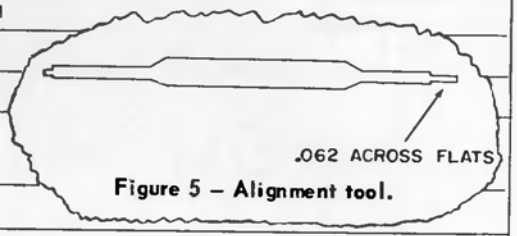

Figure 5 – Alignment tool.

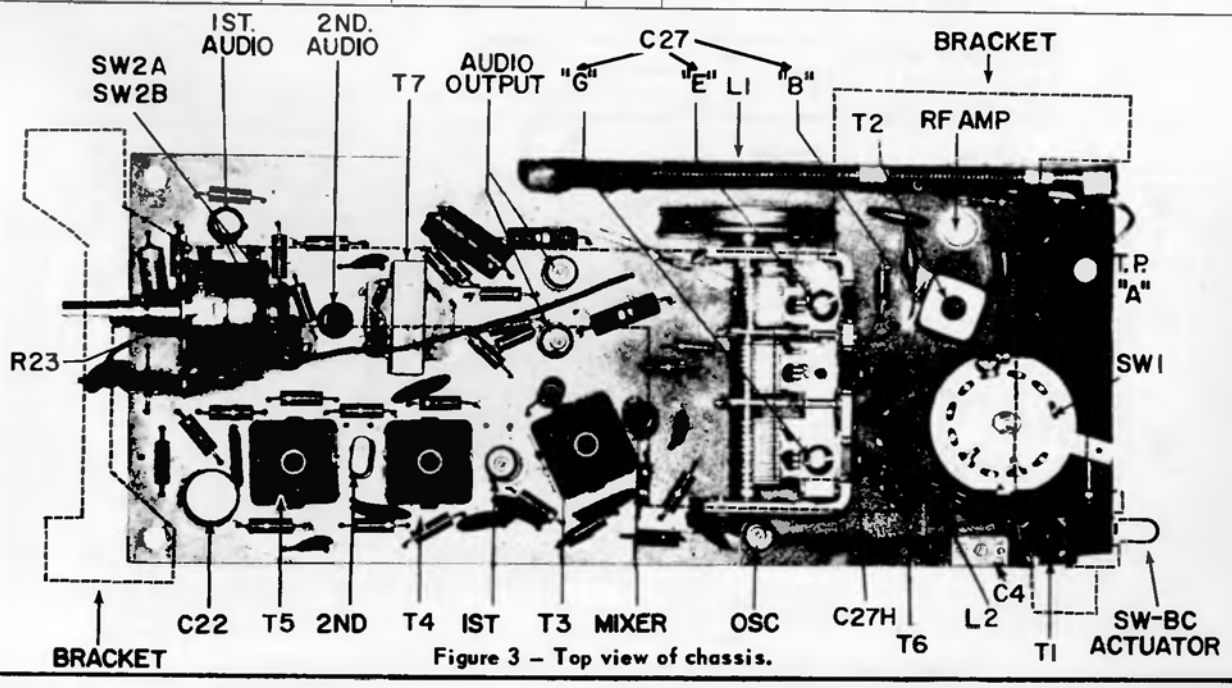

Figure 3 – Top view of chassis.

WESTINGHOUSE

Chassis V-2423-1,
Models H-827T4,
H-828T4, H-829T4
Chassis V-2423-2A
Model H-833L4

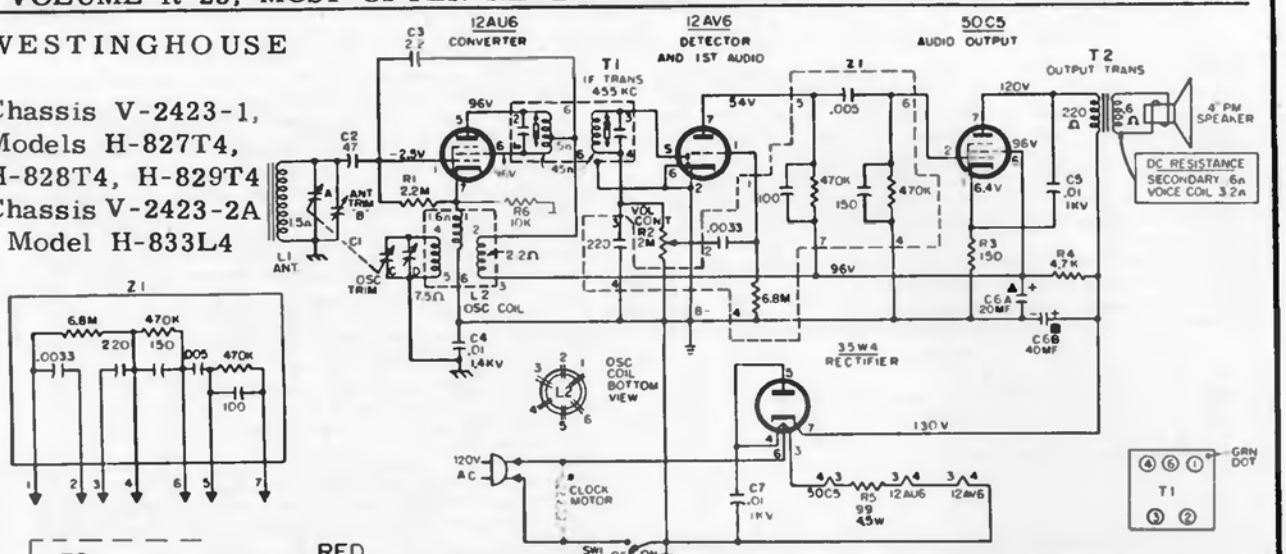

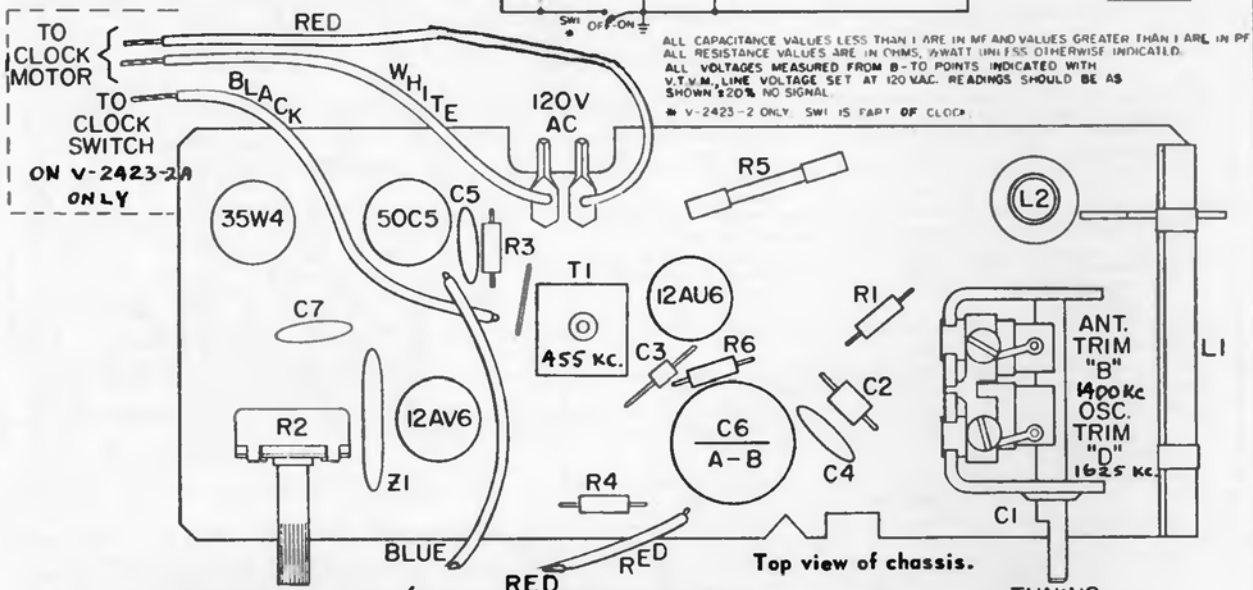

ALL CAPACITANCE VALUES LESS THAN 1 ARE IN MF AND VALUES GREATER THAN 1 ARE IN PF
ALL RESISTANCE VALUES ARE IN OHMS, ½WATT UNLESS OTHERWISE INDICATED.
ALL VOLTAGES MEASURED FROM B-TO POINTS INDICATED WITH V.T.V.M., LINE VOLTAGE SET AT 120 VAC. READINGS SHOULD BE AS SHOWN ±20% NO SIGNAL.
* V-2423-2 ONLY. SW1 IS PART OF CLOCK.

Top view of chassis.

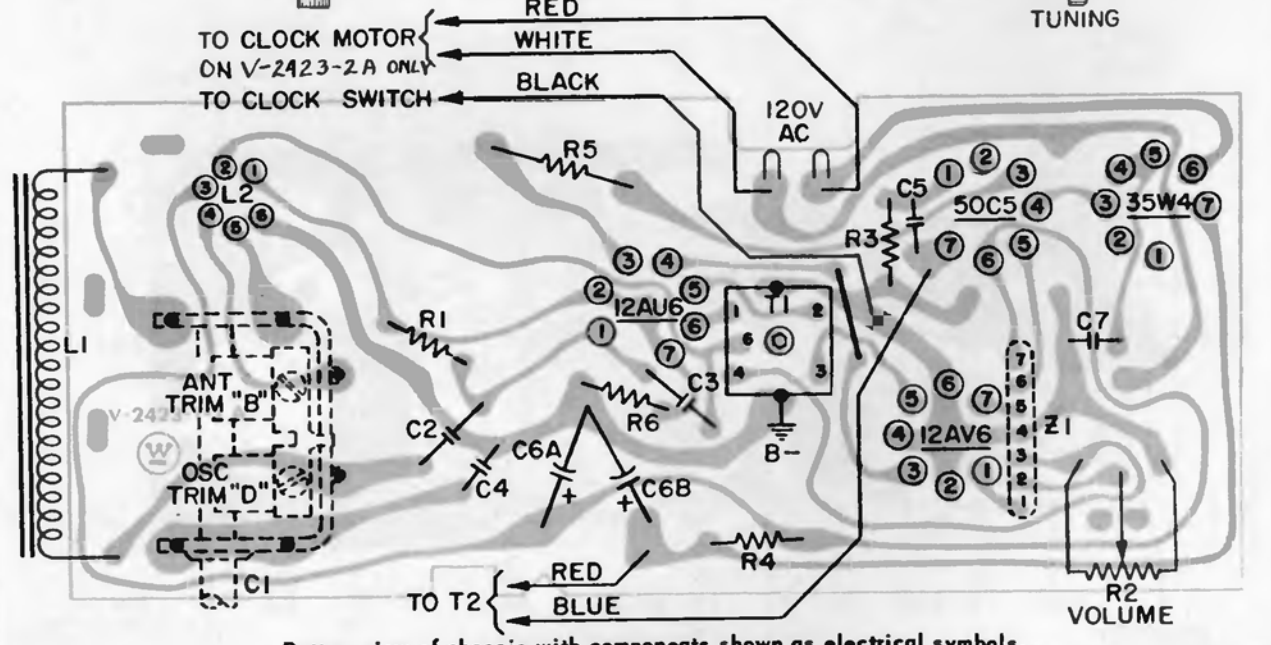

Bottom view of chassis with componeats shown as electrical symbols.

WESTINGHOUSE Chassis V-2424-1, -2, Models H-830T5, H-831T5, H-832T5, H-835L5, H-837L5, H-838L5

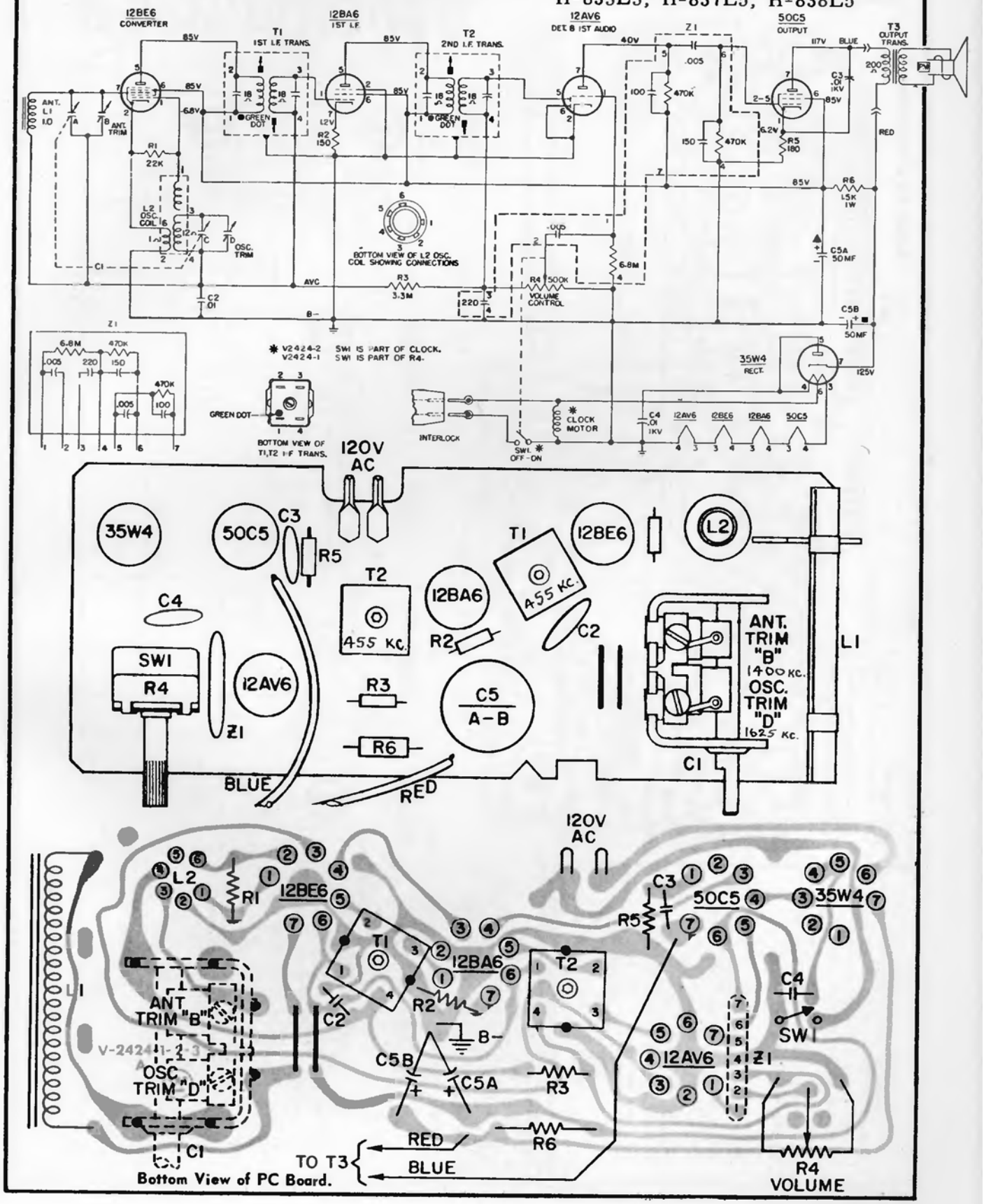

Bottom View of PC Board.

WESTINGHOUSE Chassis V-2425-1, Models H-841P6, -GPA, H-842P6, -GPA

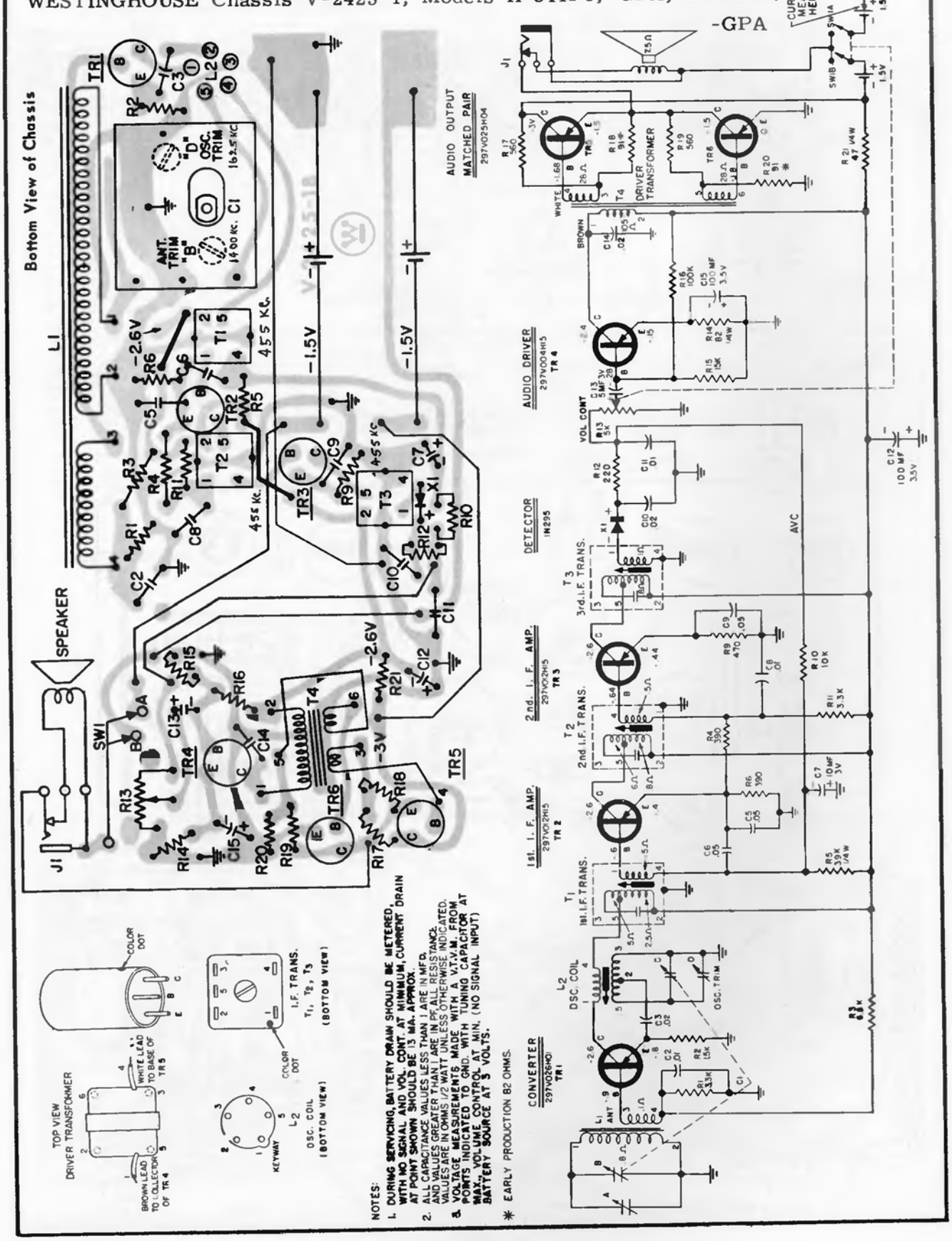

NOTES:

1. DURING SERVICING, BATTERY DRAIN SHOULD BE METERED WITH NO SIGNAL AND VOL. CONT. AT MINIMUM, CURRENT DRAIN AT POINT SHOWN SHOULD BE 13 MA. APPROX.
2. ALL CAPACITANCE VALUES LESS THAN 1 ARE IN MFD. AND VALUES GREATER THAN 1 ARE IN PF. ALL RESISTANCE VALUES ARE IN OHMS 1/2 WATT UNLESS OTHERWISE INDICATED.
3. VOLTAGE MEASUREMENTS MADE WITH A V.T.V.M. FROM POINTS INDICATED TO GND. WITH TUNING CAPACITOR AT MAX., VOLUME CONTROL AT MIN. (NO SIGNAL INPUT) BATTERY SOURCE AT 3 VOLTS.

* EARLY PRODUCTION 82 OHMS.

Westinghouse

MODELS

H-70ACS1A *(mahogany)*

H-70ACS3A *(fruitwood)*

H-70ACS4A *(walnut)*

CHASSIS V-2507-14
STEREO-PHONO CONSOLETTE

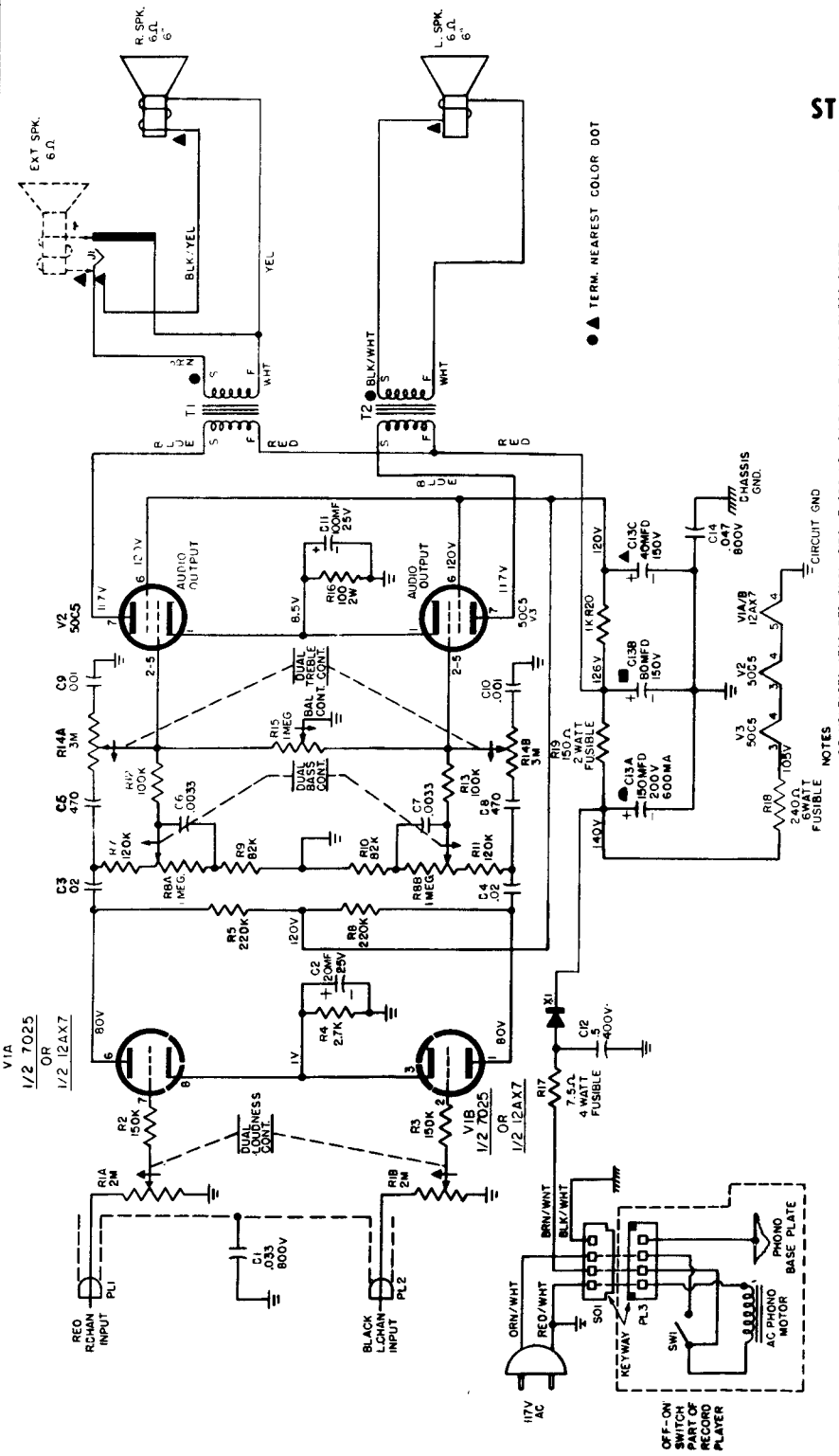

NOTES
1. D.C. VOLTAGES MEASURED FROM CIRCUIT GROUND USING A VTVM, LOUDNESS CONTROL AT MINIMUM
2. ALL CAPACITANCE VALUES ARE IN MFD & ALL RESISTANCE VALUES IN OHMS, 1/2 WATT UNLESS OTHERWISE SPECIFIED
3. BOTH TRANSFORMER WINDINGS ARE IN THE SAME DIRECTION

CHASSIS REMOVAL

1. Remove control knobs.
2. Disconnect Amp-Lok type plug from record changer.
3. Remove phono plugs from record changer noting color of cables and their respective jacks.
4. Disconnect speaker leads noting connections with regard to lead color and speaker phasing dots.
5. Remove two nuts securing left speaker baffle and remove baffle.
6. Remove four nuts securing chassis and remove chassis.

NOTE: Be sure during chassis installation that phono cables to changer and leads to speakers are properly phased (refer to schematic diagram for speaker lead color coding).

STYLUS REPLACEMENT

To remove the Stylus move the Stylus Handle until it points straight down from the bottom of the cartridge. Grasp the stylus handle close to the body of the cartridge and pull until the unit snaps out of the pressure fit grooves.

To replace the stylus reverse the above procedure.

CARTRIDGE REPLACEMENT

1. Remove the two screws holding the cartridge to the tone arm.
2. Pry out the rear section of the cartridge to which the four wires are attached. Do not pull on the wires.
3. Insert the rear section into the new cartridge with the key on the rear section fitting the keyway slot in the cartridge.
4. Secure the new cartridge to the tone arm with the two screws.

WESTINGHOUSE Chassis V-2507-15,
Models H-F1020 through H-F1023

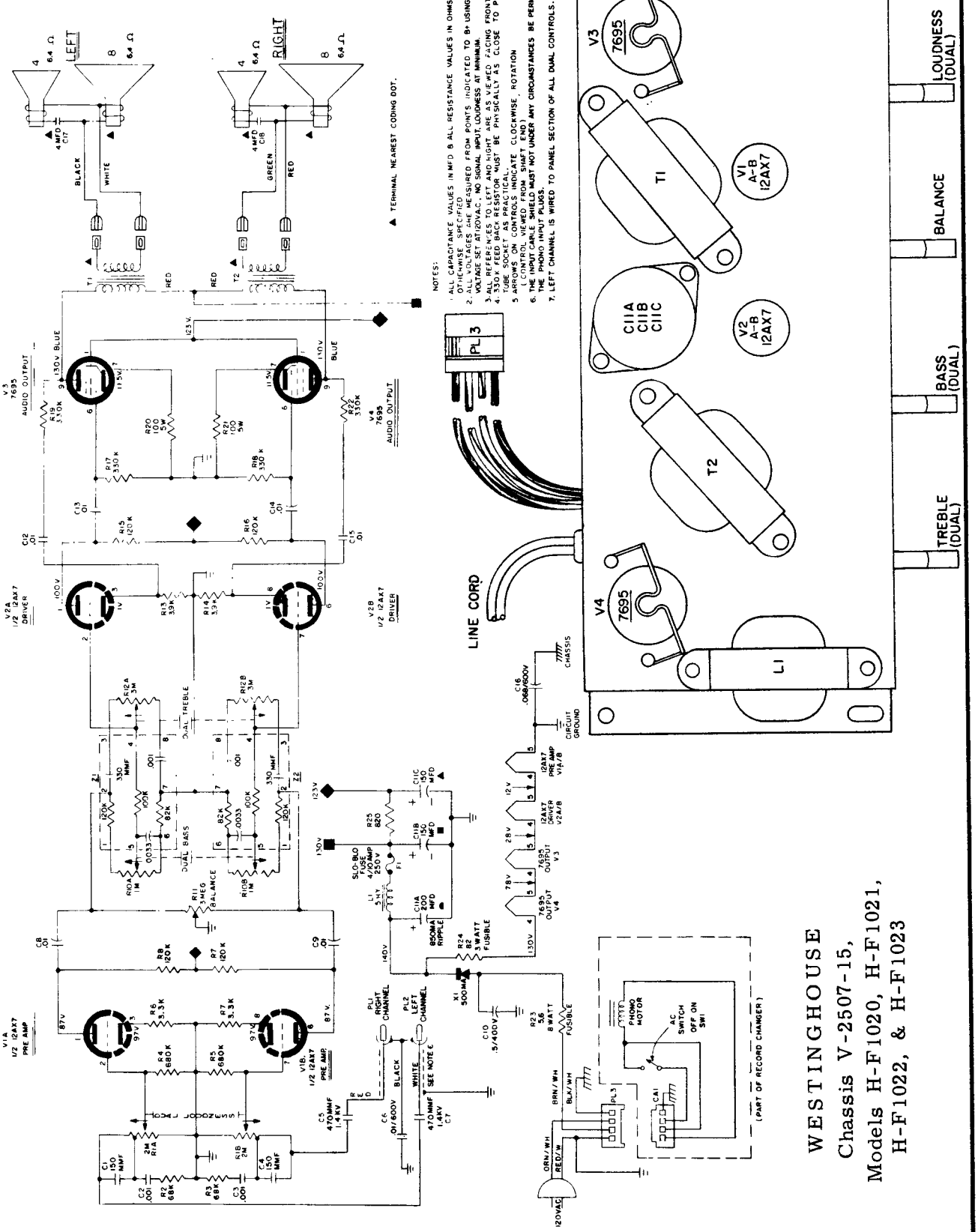

WESTINGHOUSE
Chassis V-2507-15,
Models H-F1020, H-F1021,
H-F1022, & H-F1023

WESTINGHOUSE
Model H-84ACR1
Chassis
V-2518-1

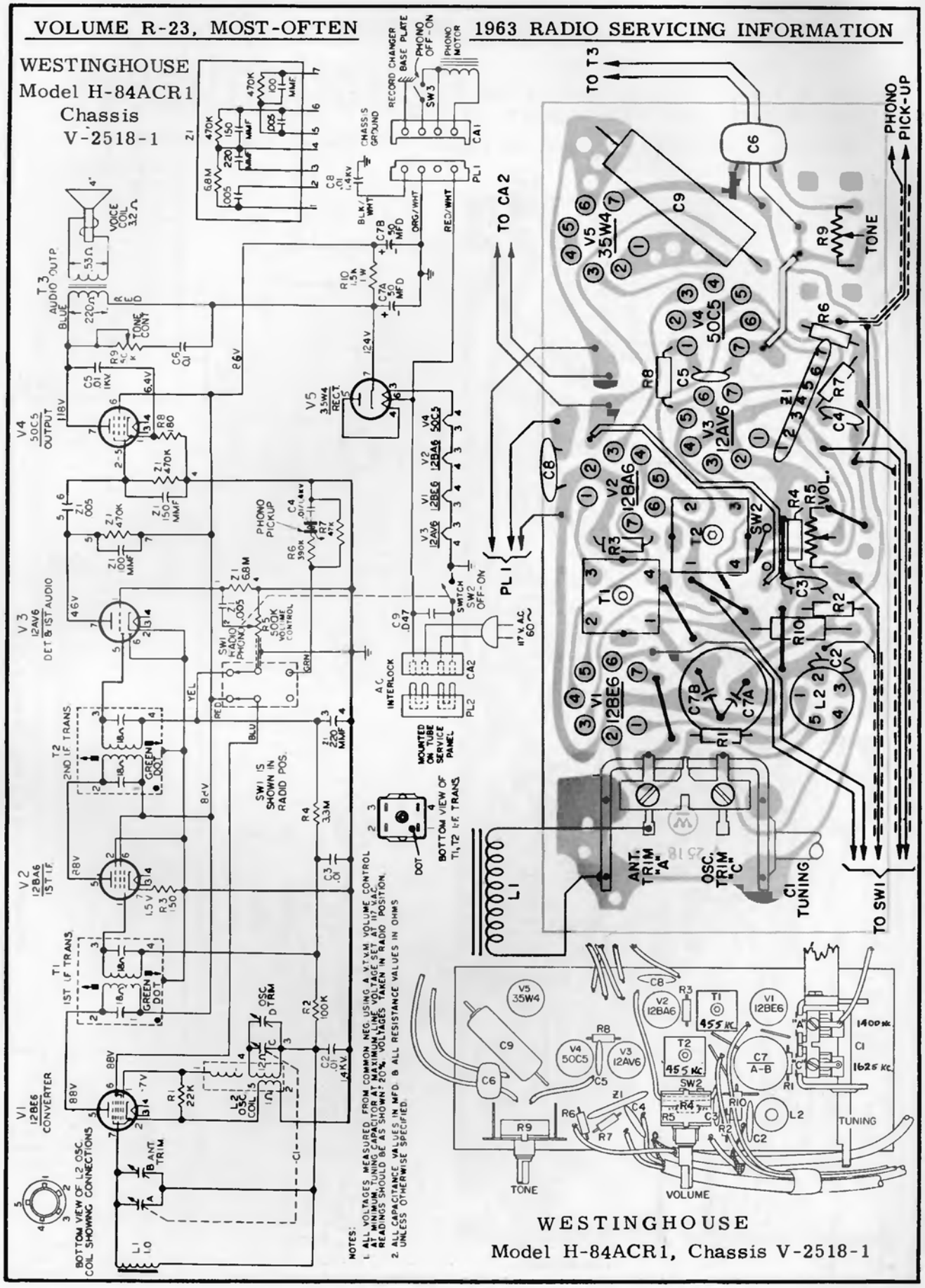

Bottom View of PC Board.

WESTINGHOUSE
Model H-84ACR1, Chassis V-2518-1

WESTINGHOUSE

Chassis V-2516-1 Tuner, V-2510-14 Amplifier
Models H-M1430, H-M1431, H-M1432, H-M1433

(Material below and on the next two pages)

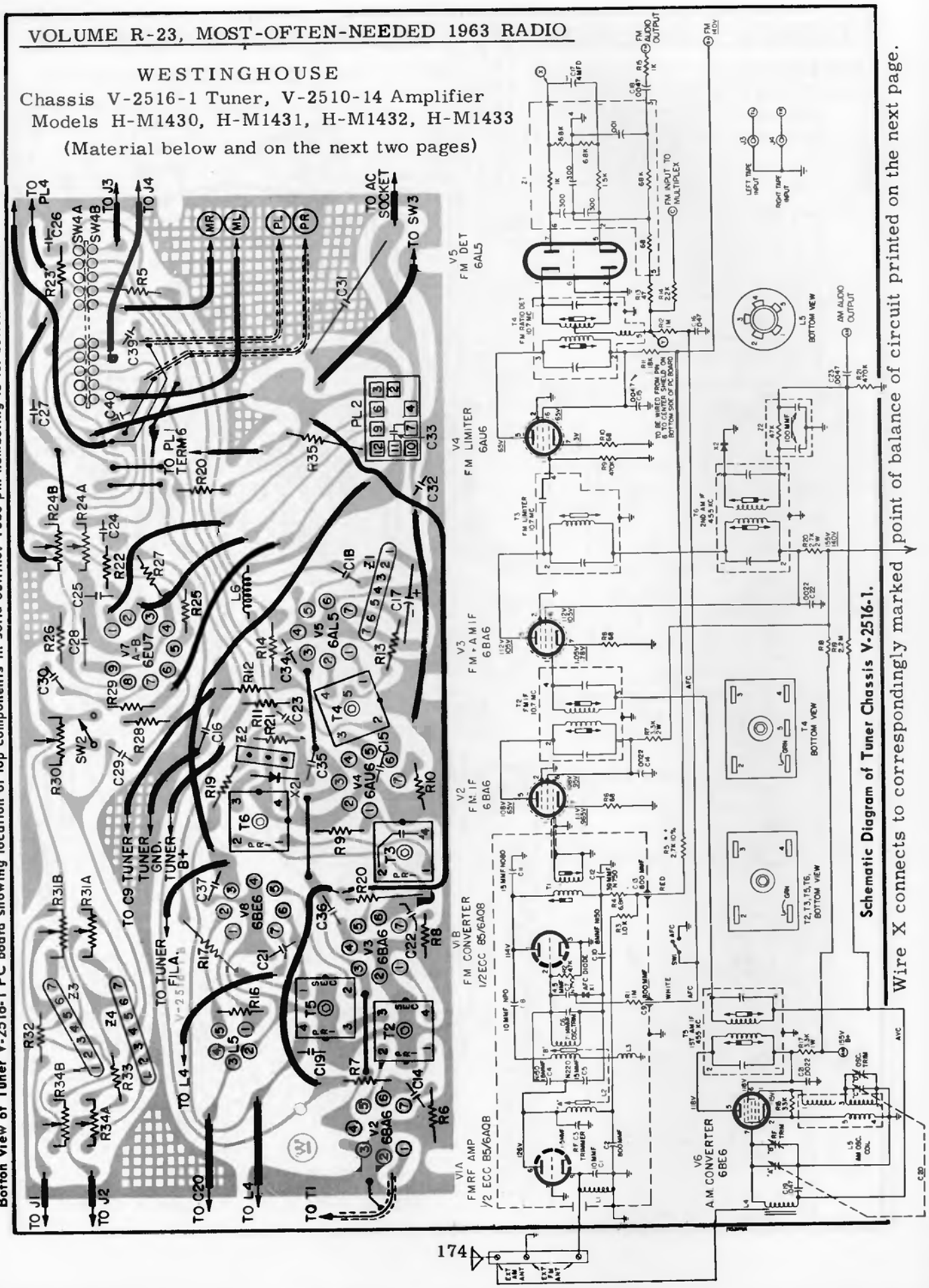

Westinghouse

(Continued and also next page)

MODELS

H-M1430 *(walnut)*
H-M1431 *(cherry traditional)*
H-M1432 *(cherry provincial)*
H-M1433 *(maple)*

CHASSIS

V-2516-1 Tuner Pre-Amp
V-2510-14 Amplifier

Wire X connects to correspondingly marked point of balance of circuit printed on preceding page.

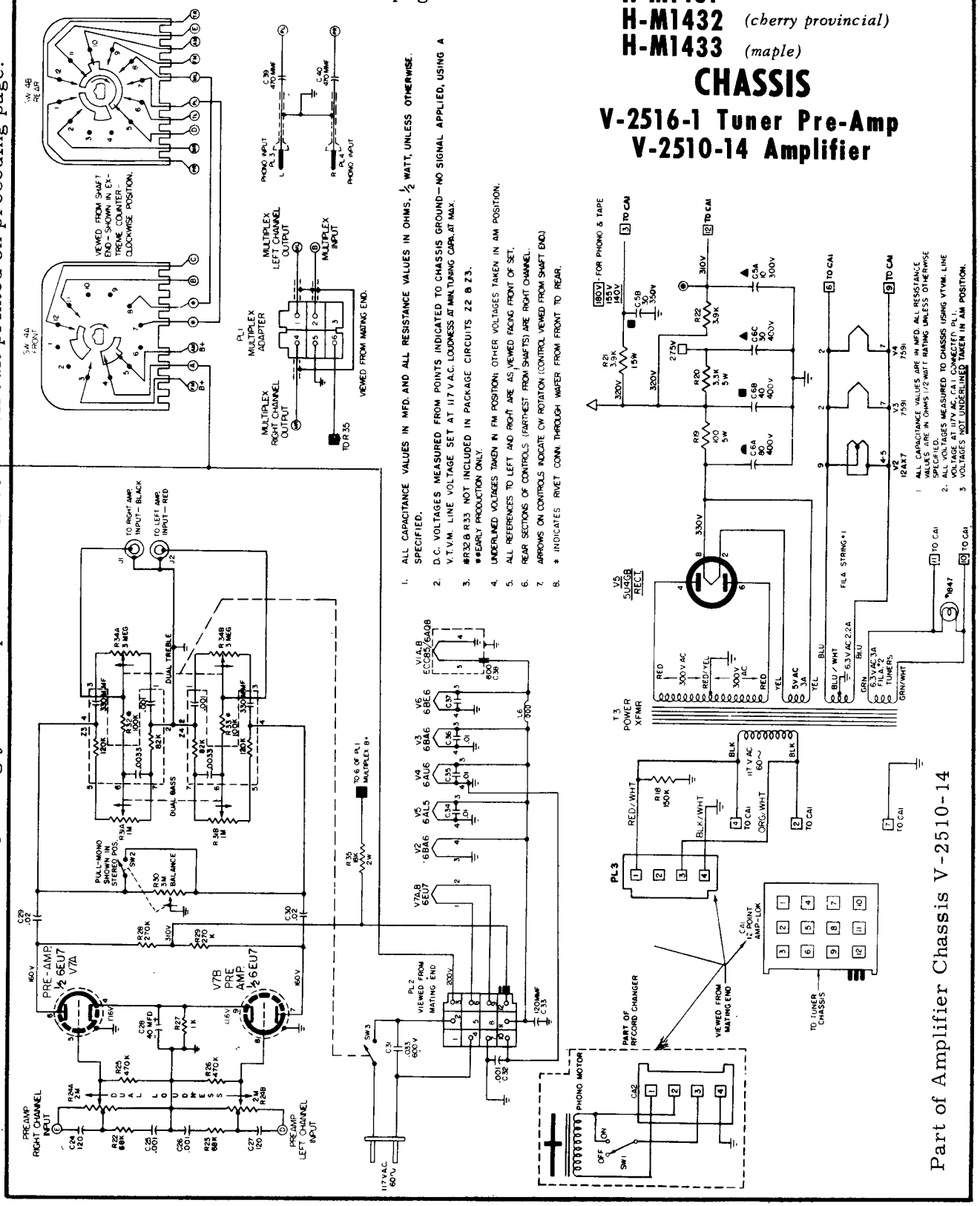

Part of Amplifier Chassis V-2510-14

1. ALL CAPACITANCE VALUES IN MFD. AND ALL RESISTANCE VALUES IN OHMS, ½ WATT, UNLESS OTHERWISE SPECIFIED.
2. D.C. VOLTAGES MEASURED FROM POINTS INDICATED TO CHASSIS GROUND—NO SIGNAL APPLIED, USING A V.T.V.M. LINE VOLTAGE SET AT 117 V.A.C. LOUDNESS AT MIN. TUNING CAPA. AT MAX.
3. ✱R32 & R33 NOT INCLUDED IN PACKAGE CIRCUITS 22 & 23.
4. ✱✱EARLY PRODUCTION ONLY.
4. UNDERLINED VOLTAGES TAKEN IN FM POSITION; OTHER VOLTAGES TAKEN IN AM POSITION.
5. ALL REFERENCES TO LEFT AND RIGHT ARE AS VIEWED FACING FRONT OF SET.
6. REAR SECTIONS OF CONTROLS (FARTHEST FROM SHAFTS) ARE RIGHT CHANNEL.
7. ARROWS ON CONTROLS INDICATE CW ROTATION (CONTROL VIEWED FROM SHAFT END).
8. ✱ INDICATES RIVET CONN. THROUGH WAFER FROM FRONT TO REAR.

WESTINGHOUSE

Chassis V-2516-1 with V-2510-14,
Models H-M1430 through H-M1433
(Continued from preceding two pages)

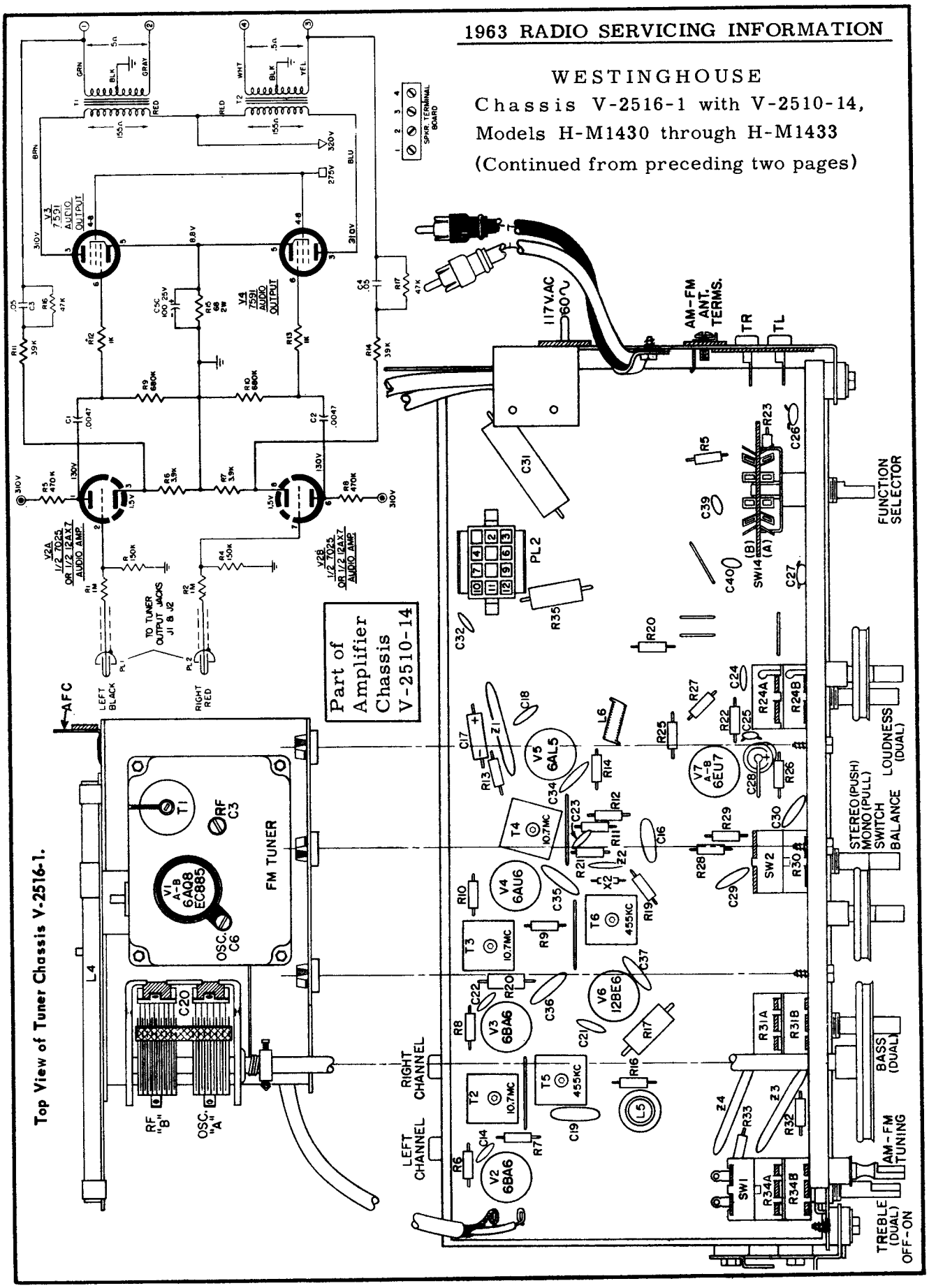

ZENITH RADIO CORPORATION

MODELS J506G, J508B, BA, C, P, AND W, CHASSIS 5FO5

Models K510BA,-GA,-LA, using Chassis 5K10, use circuitry shown on this page, but use a different chassis placement of parts.

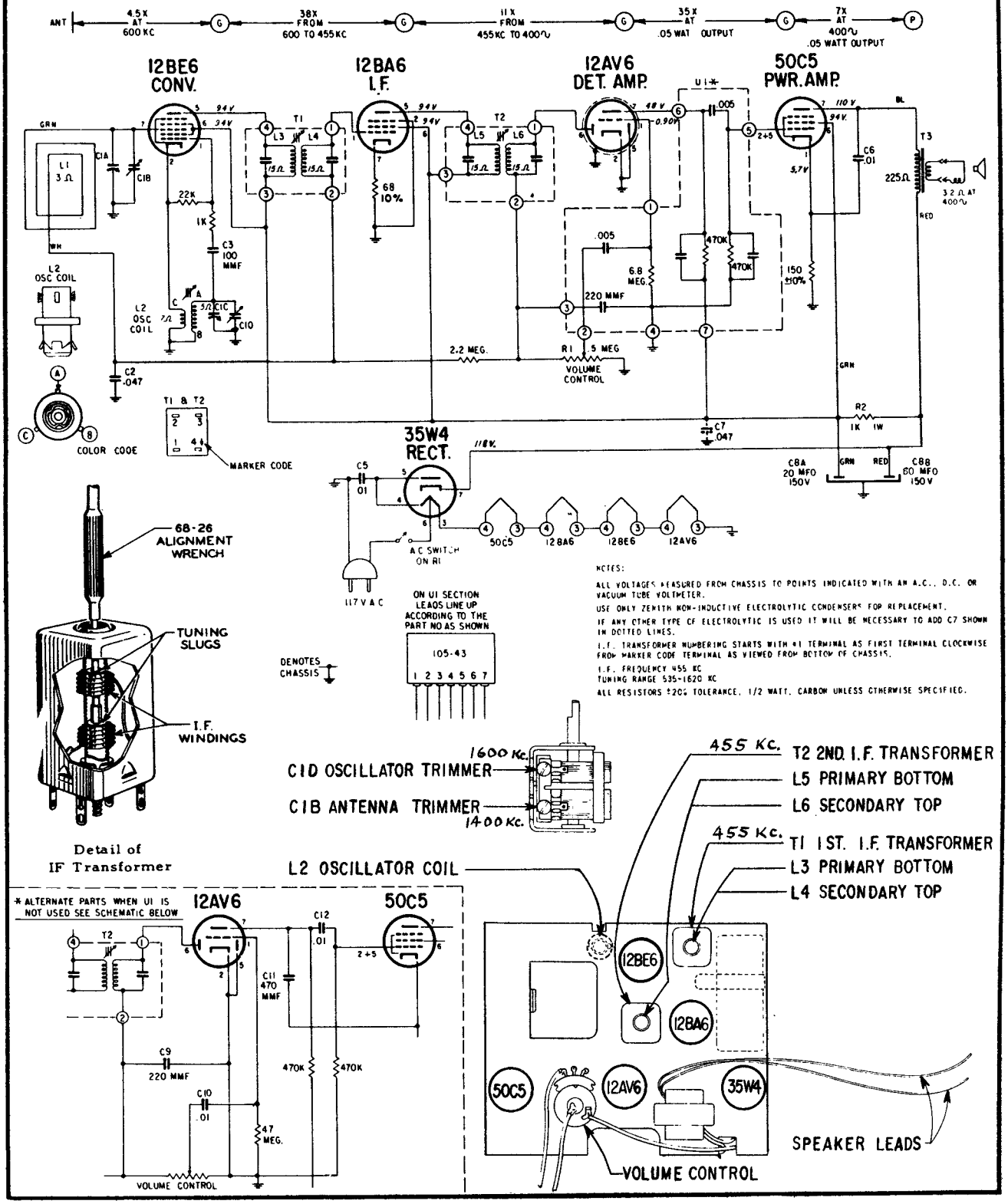

ZENITH RADIO CORPORATION MODELS J513C, F, G, L, CHASSIS 5J02

MODELS J514F, G, L, & W, CHASSIS 5J04 uses identical circuitry.

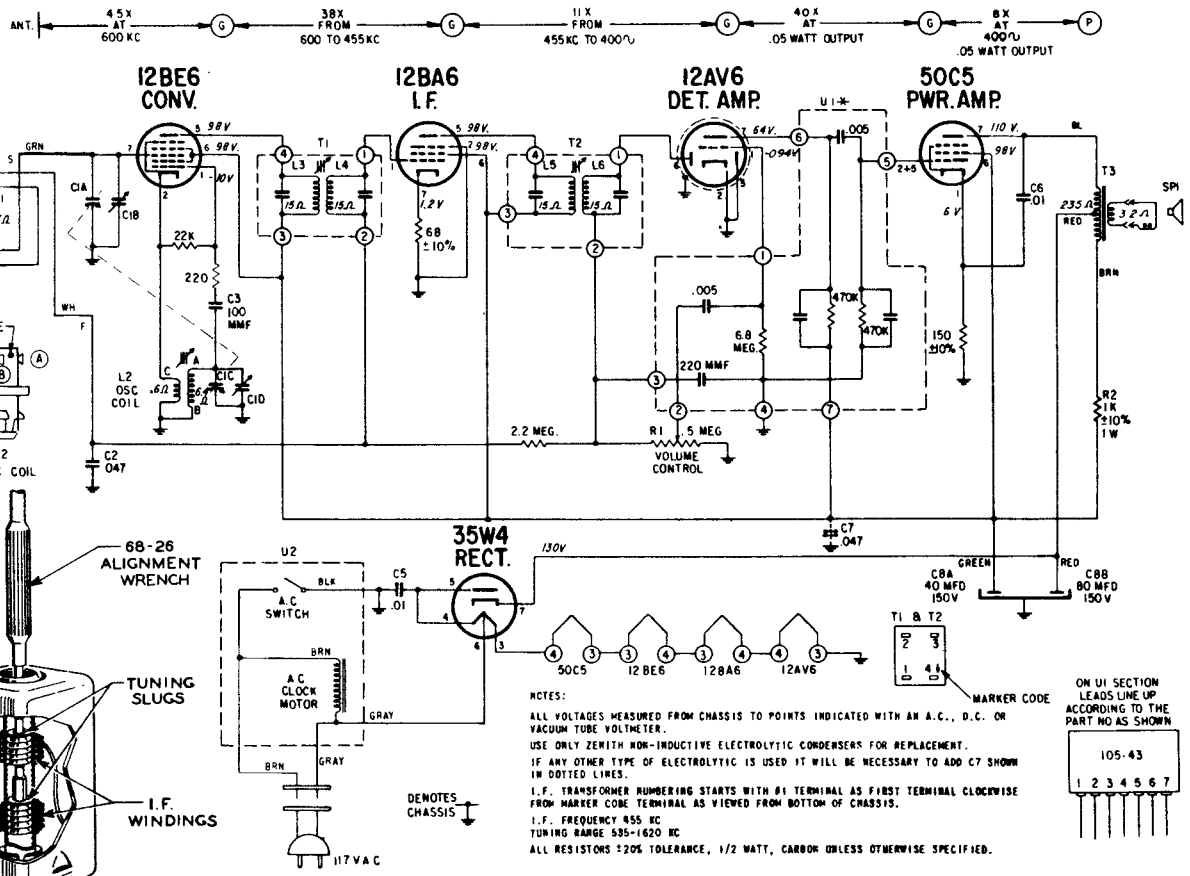

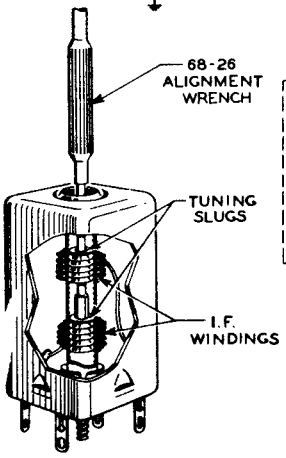

Detail of IF Transformer

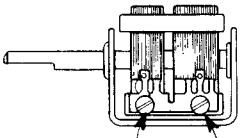

CID OSC. TRIMMER

CIB ANT. TRIMMER

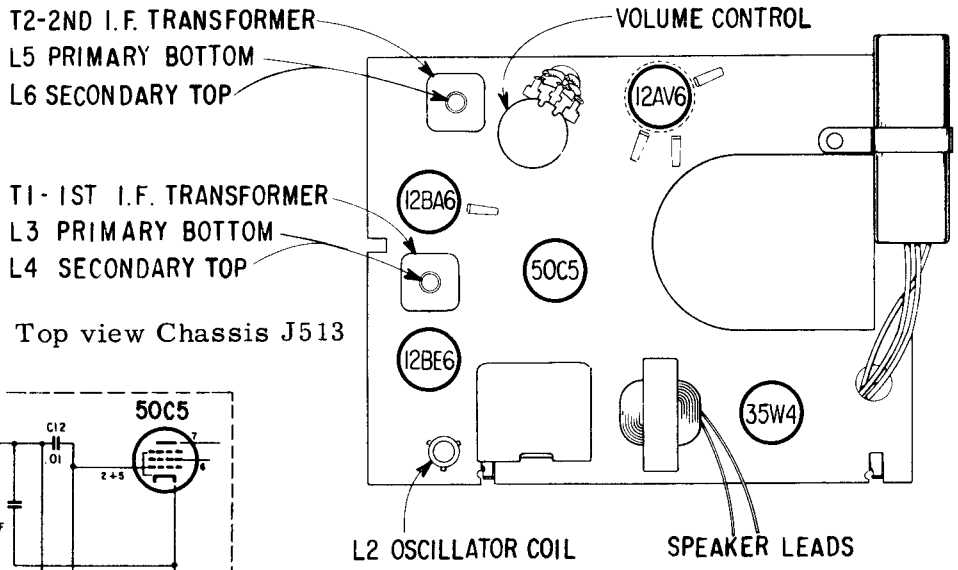

Top view Chassis J513

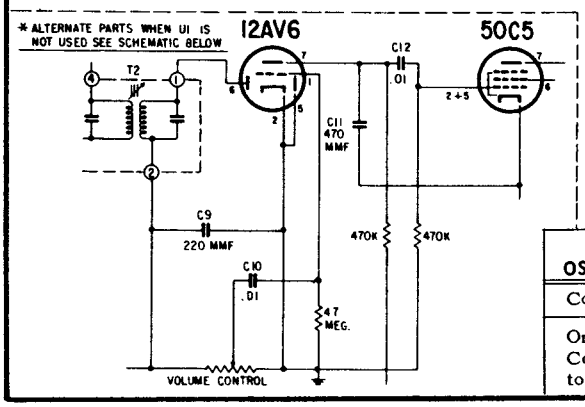

ALIGNMENT PROCEDURE

CONNECT OSCILLATOR TO	DUMMY ANTENNA	INPUT SIG. FREQUENCY	SET DIAL AT	TRIMMERS
Converter Grid	.5 Mfd.	455 Kc.	600 Kc.	L3,L4,L5,L6
One Turn Loop Coupled Loosely to Wave magnet	–	1600 Kc.	1600 Kc.	C1D
	–	1400 Kc.	1400 Kc.	C1B

ZENITH RADIO CORPORATION
MODEL J727C, F&W, CHASSIS 7J04

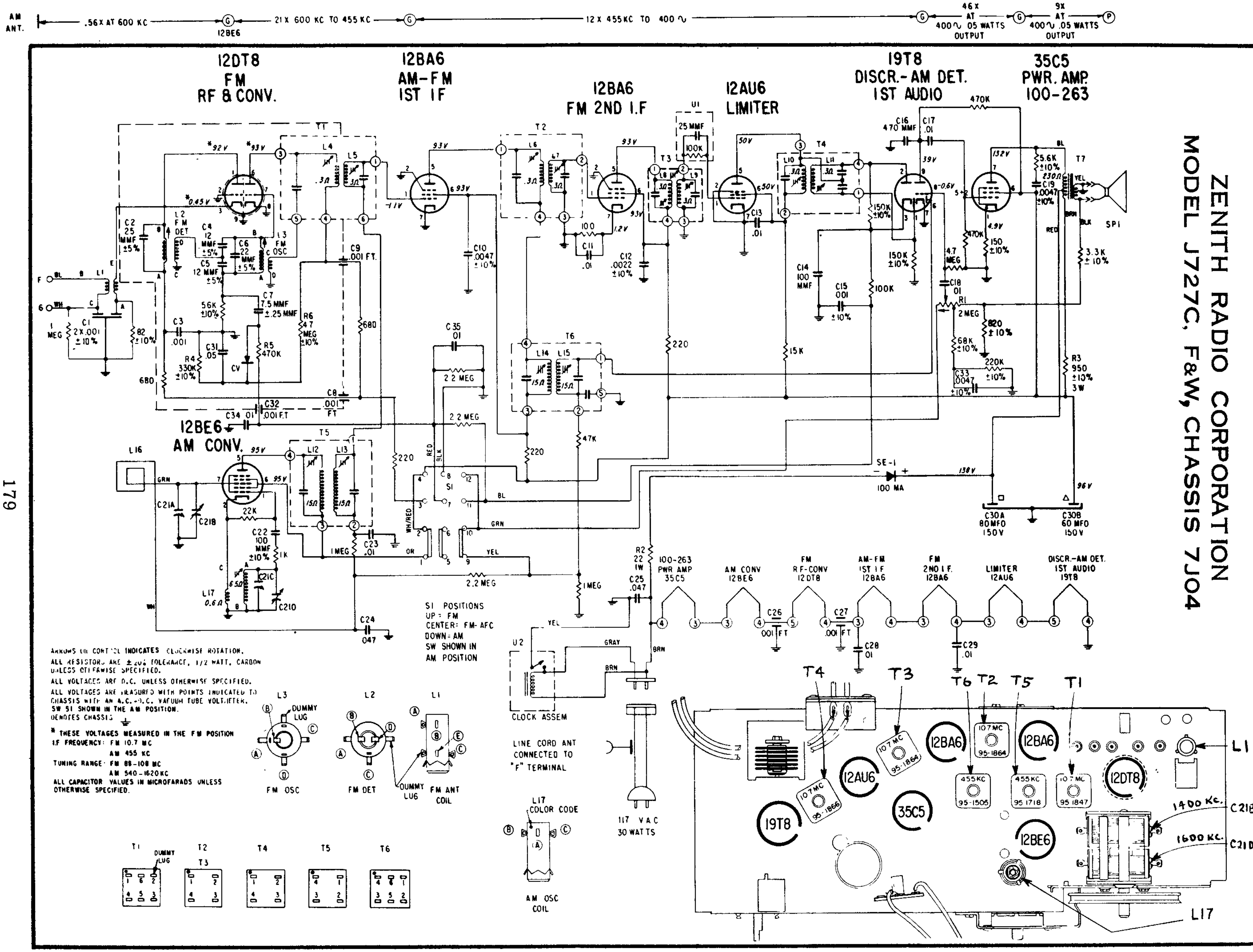

ARROWS ON CONTROL INDICATES CLOCKWISE ROTATION.

ALL RESISTORS ARE ± 20% TOLERANCE, 1/2 WATT, CARBON UNLESS OTHERWISE SPECIFIED.

ALL VOLTAGES ARE D.C. UNLESS OTHERWISE SPECIFIED.

ALL VOLTAGES ARE MEASURED WITH POINTS INDICATED TO CHASSIS WITH AN A.C.-D.C. VACUUM TUBE VOLTMETER.
SW S1 SHOWN IN THE AM POSITION.
DENOTES CHASSIS ⏚

* THESE VOLTAGES MEASURED IN THE FM POSITION
I.F FREQUENCY: FM 10.7 MC
AM 455 KC
TUNING RANGE: FM 88-108 MC
AM 540-1620 KC
ALL CAPACITOR VALUES IN MICROFARADS UNLESS OTHERWISE SPECIFIED.

ZENITH RADIO CORP.

MODELS ROYAL 40-50K-60

CHASSIS 6KT43Z1 & 6KT44Z1

(For chassis wiring view see next page adjacent at right)

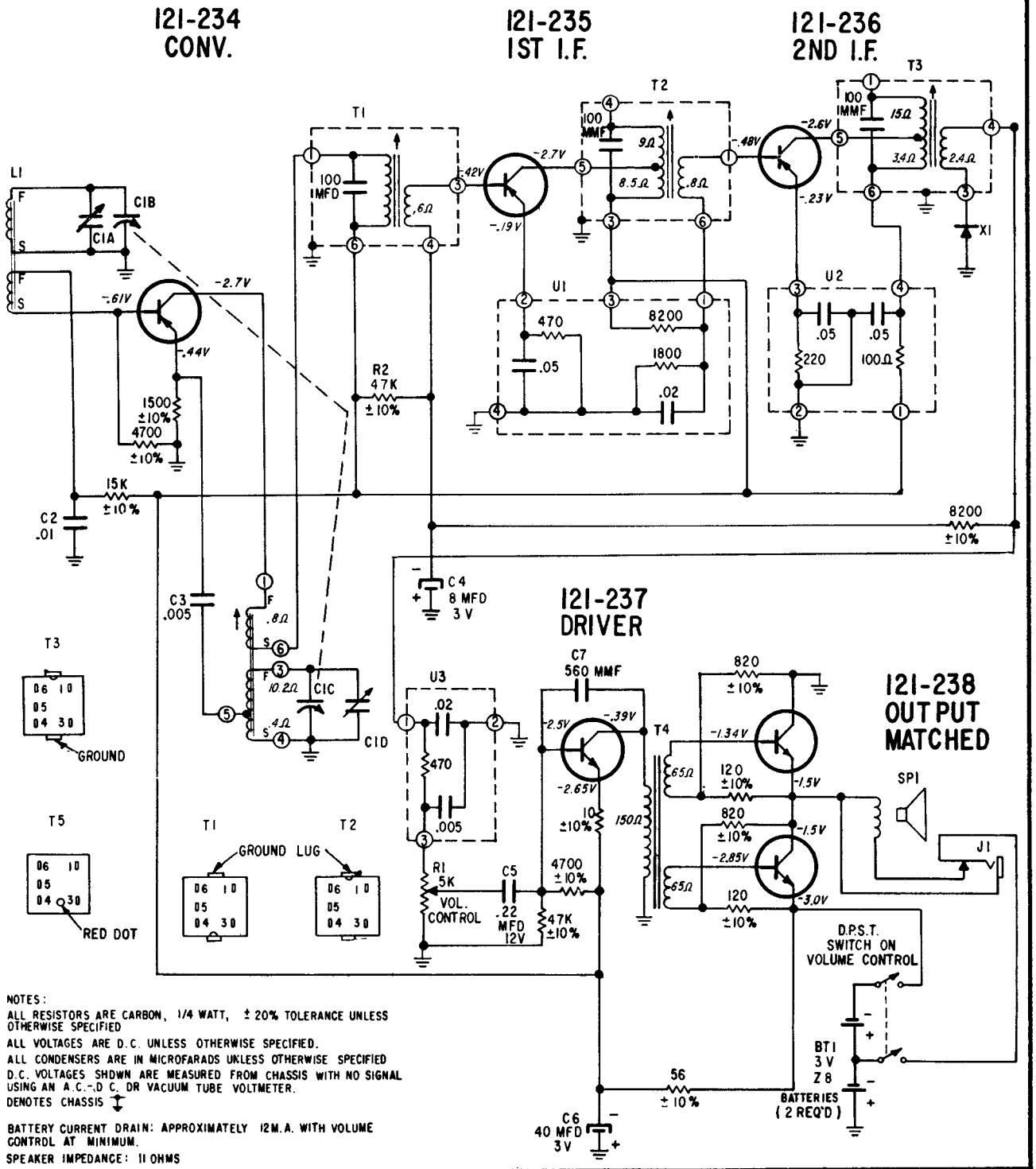

NOTES:

ALL RESISTORS ARE CARBON, 1/4 WATT, ± 20% TOLERANCE UNLESS OTHERWISE SPECIFIED

ALL VOLTAGES ARE D.C. UNLESS OTHERWISE SPECIFIED.

ALL CONDENSERS ARE IN MICROFARADS UNLESS OTHERWISE SPECIFIED

D.C. VOLTAGES SHOWN ARE MEASURED FROM CHASSIS WITH NO SIGNAL USING AN A.C.-D.C. OR VACUUM TUBE VOLTMETER.

DENOTES CHASSIS

BATTERY CURRENT DRAIN: APPROXIMATELY 12M.A. WITH VOLUME CONTROL AT MINIMUM.

SPEAKER IMPEDANCE: 11 OHMS

ZENITH Models 40, 50K, 60, Chassis 6KT43Z1, 6KT44Z1 (Continued)

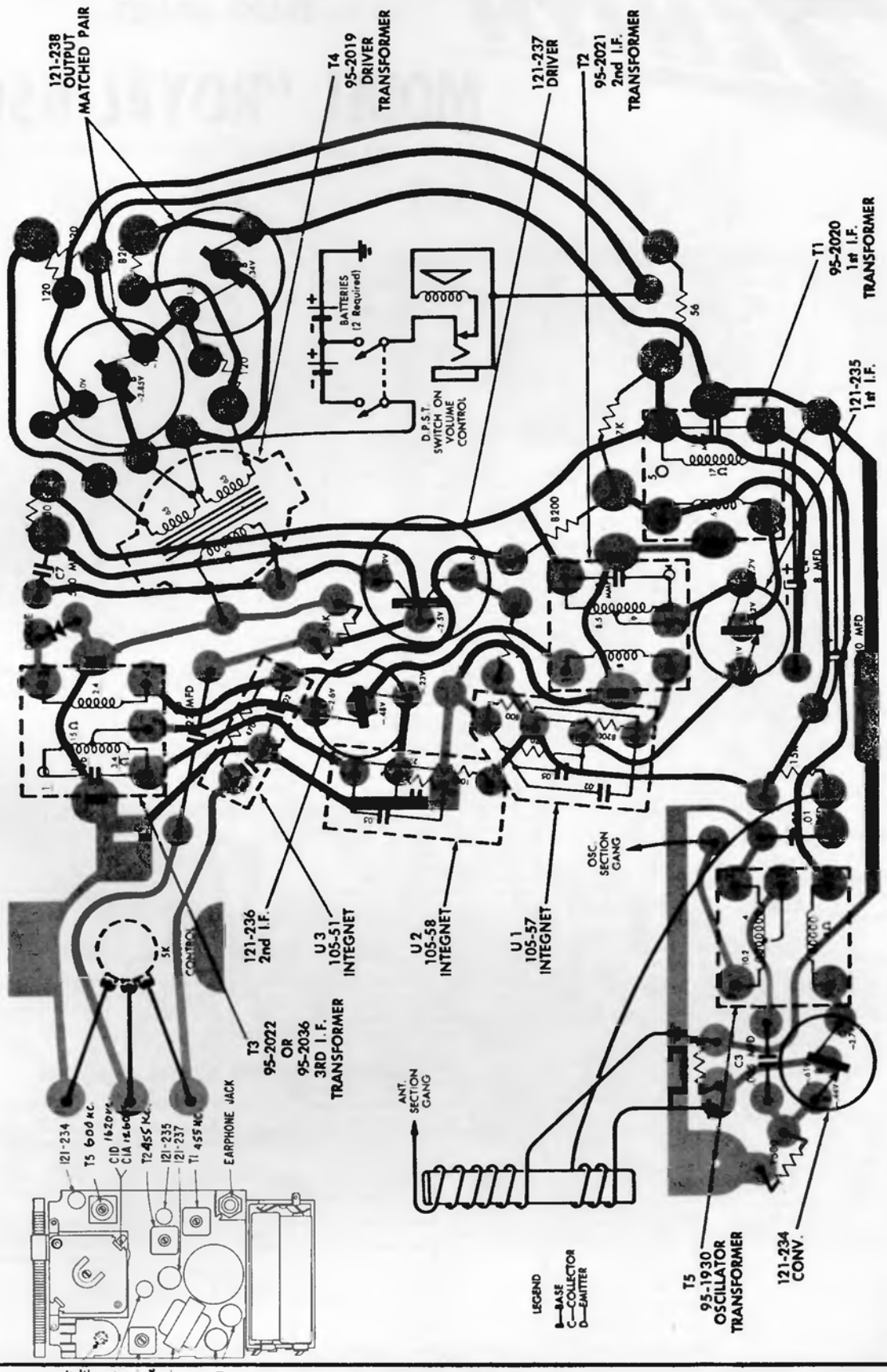

CHASSIS, WIRING AND COMPONENTS

VIEWED FROM WIRING SIDE

ZENITH

CHASSIS 6JT45Z1

MODEL "ROYAL 650"

(Additional service material on the next page)

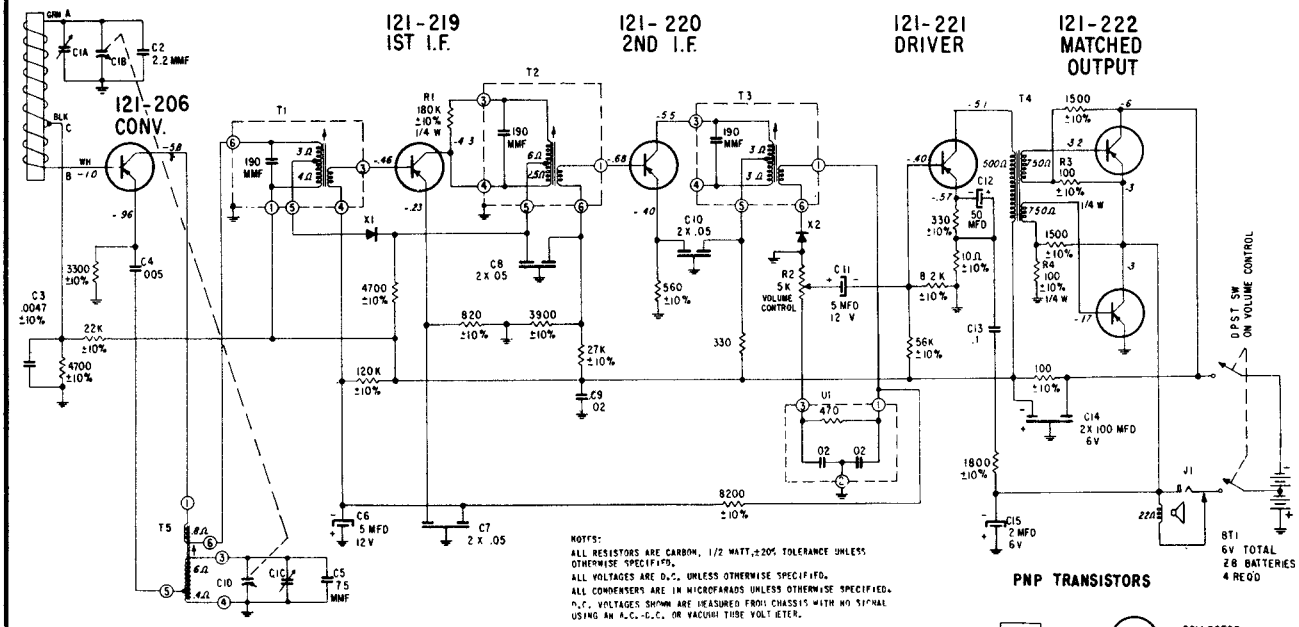

NOTES:
ALL RESISTORS ARE CARBON, 1/2 WATT, ±20% TOLERANCE UNLESS OTHERWISE SPECIFIED.
ALL VOLTAGES ARE D.C. UNLESS OTHERWISE SPECIFIED.
ALL CONDENSERS ARE IN MICROFARADS UNLESS OTHERWISE SPECIFIED.
D.C. VOLTAGES SHOWN ARE MEASURED FROM CHASSIS WITH NO SIGNAL USING AN A.C.-D.C. OR VACUUM TUBE VOLTMETER.
DENOTES CHASSIS
BATTERY CURRENT DRAIN APPROX. 6.5 MA WITH VOLUME CONTROL AT MINIMUM.
SPEAKER IMPEDANCE 22Ω AT 400 CPS

PNP TRANSISTORS

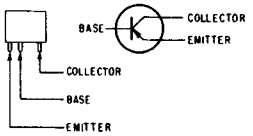

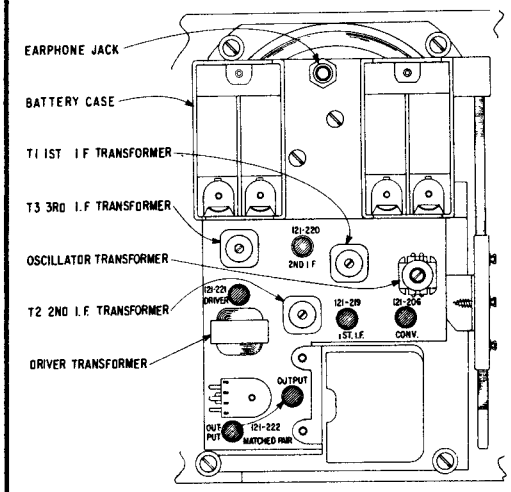

DRIVER	MATCHED OUTPUT
121.221	121-222
1. BROWN	7. VIOLET
2. RED	6. BLUE
3. ORANGE	5. GREEN
4. YELLOW	4. YELLOW

THE MATCHING IDENTIFICATION WILL BE A COLORED DOT.
THE MATCHING OF TRANSISTORS WILL BE AS INDICATED IN THE ABOVE CHART.

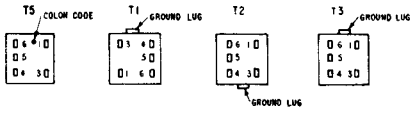

CHASSIS INFORMATION CHART

Transistor Layout Label Color	Part No.	Conv.	1st. I.F.	2nd. I.F.	Crystal Diode Detector	Driver	Output-Output	Supplier
Black 102-8292	Zenith E1A Type	121-206 PNP	121-219 PNP	121-220 PNP	103-19 1N87G	121-221 PNP	121-222 Matched Pair PNP PNP	Texas Instrument

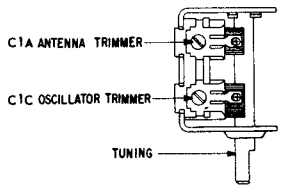

ALIGNMENT PROCEDURE

Operation	Input Signal Frequency	Connect Inner Conductor From Oscillator To	Connect Outer Shield Conductor From Oscillator To	Set Dial At	Trimmers	Purpose
1	455 KC	ONE TURN LOOSELY COUPLED TO WAVEMAGNET	Chassis	600 KC	Adj. T1, T2, T3 for maximum output.	For I.F. Alignment
2	1620 KC		–	Gang wide open.	C1C	Set Oscillator to dial scale.
3	600 KC		–	Near 600 KC	Adjust slug in T5	While rocking gang, adjust T5 for maximum output regardless of dial accuracy.
4	1260 KC		–	1260 KC	C1A	Align loop ant.
5	REPEAT STEPS 2, 3, & 4		–	–	–	

ZENITH Model "Royal 650", Chassis 6JT45Z1, Continued

CHASSIS, WIRING AND COMPONENTS
VIEWED FROM WIRING SIDE

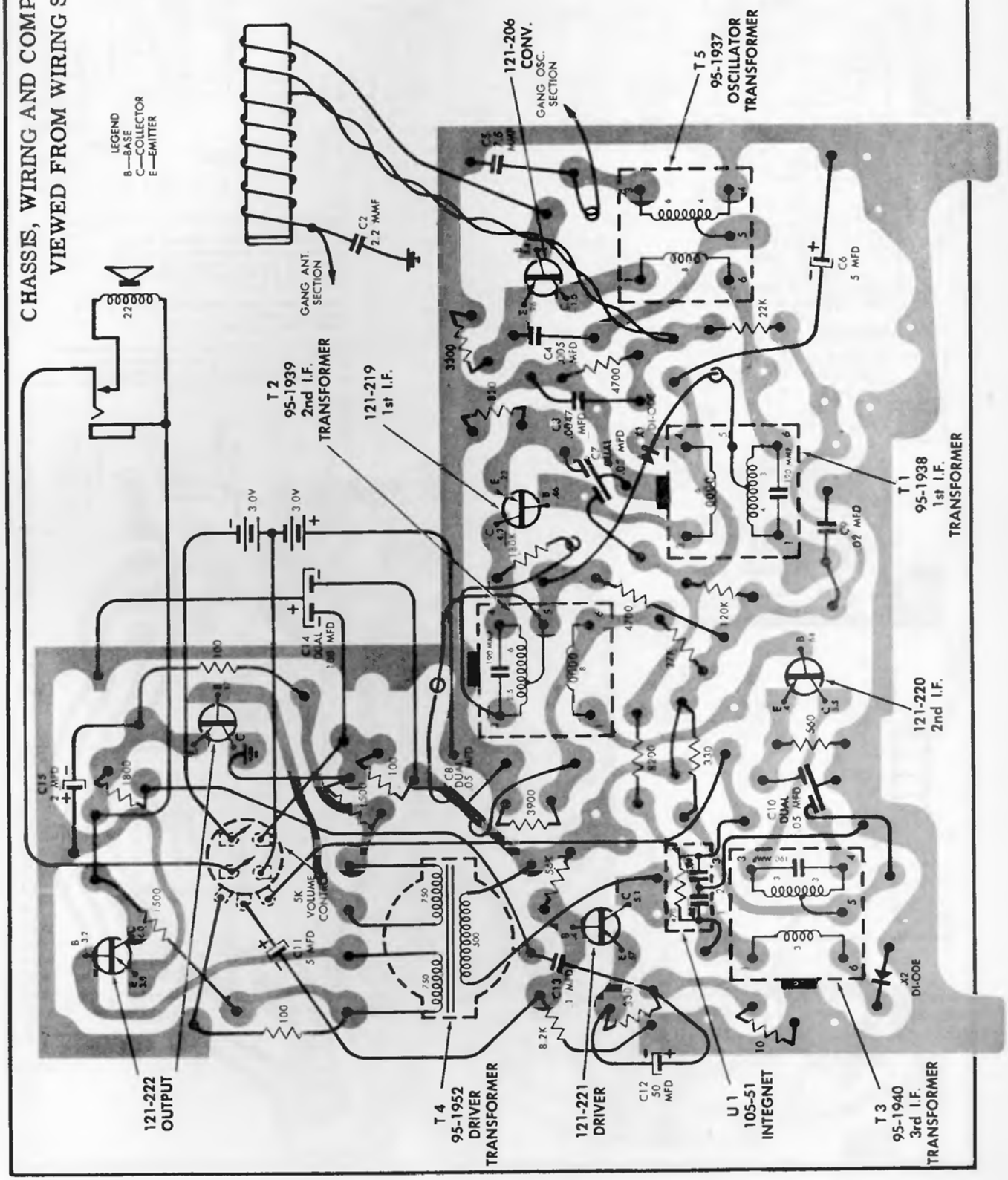

ZENITH Models 90 and 125, using Chassis 6JT40Z1 and 6J41Z1

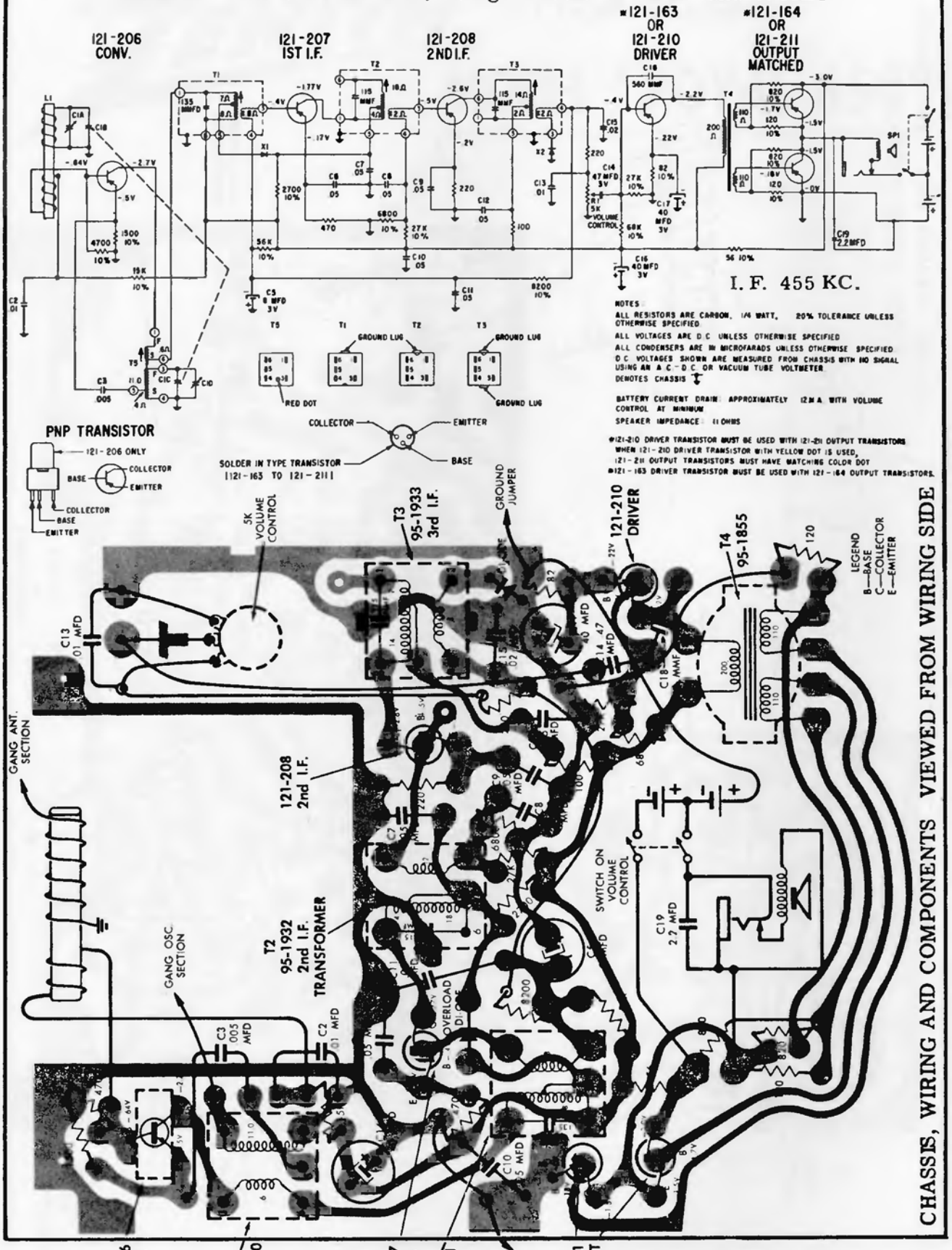

CHASSIS, WIRING AND COMPONENTS VIEWED FROM WIRING SIDE

ZENITH RADIO CORPORATION

SCHEMATIC FOR KPS-80

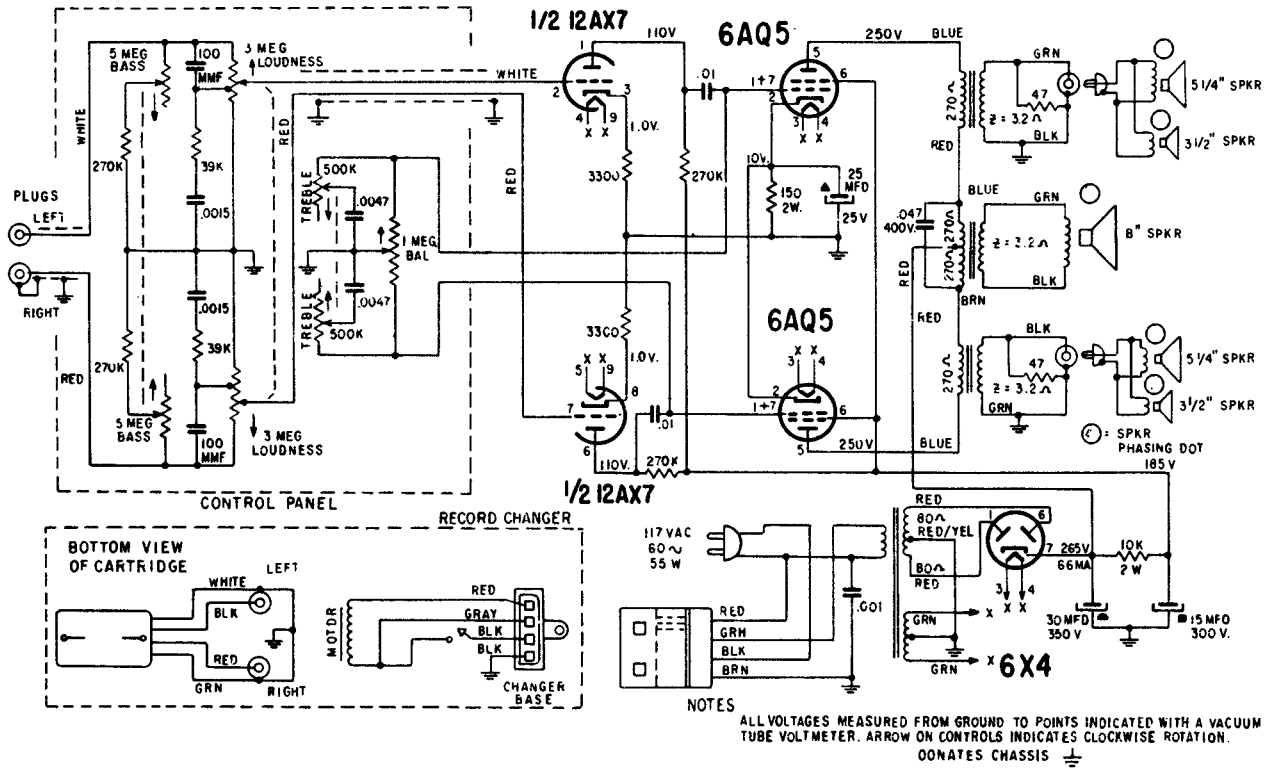

3K01 & 3K02 SCHEMATIC FOR MODELS ST1950T-1, MT1950-1, ST1954T, MT1954, SFH2500T-1, MH2600-1, RK2600, SK2501T & MK2601

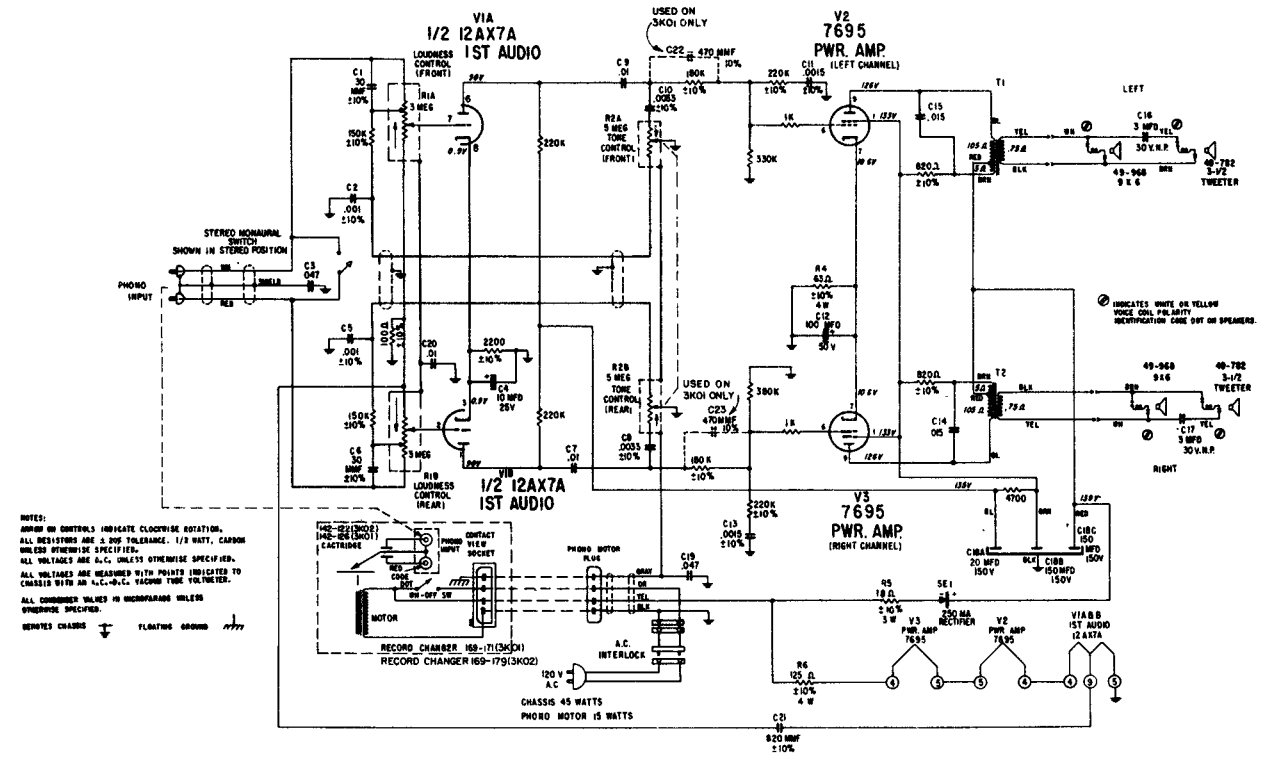

ZENITH RADIO CORPORATION

Chassis 9H20LZ1, used in Models MP500, MP505, MT1970, MK2602, MK2603, MK2606, MK2608, MK2786, MK2787, MK2789, MK3386, MK3388.

(Continued on the next page, at right)

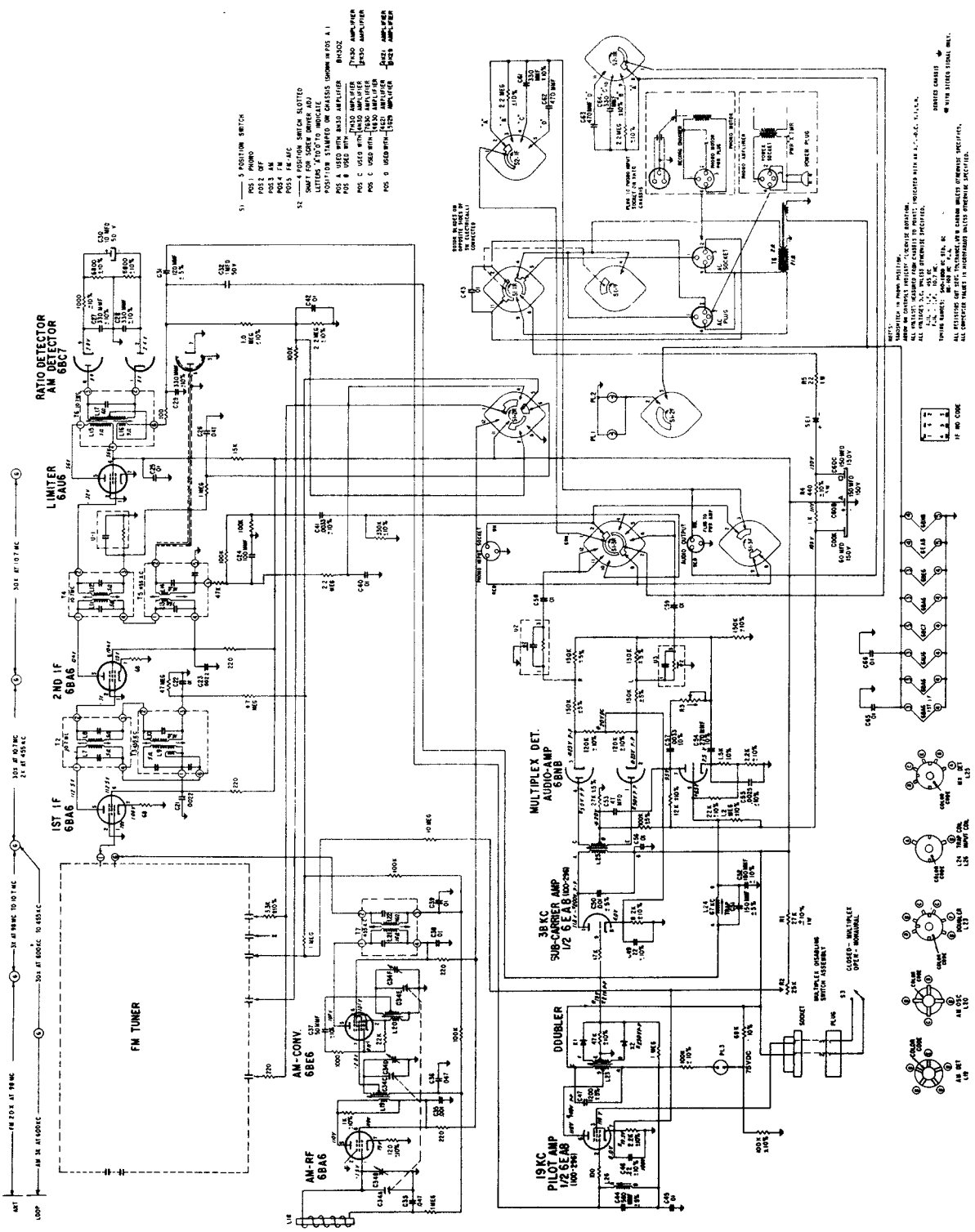

9H20LZ1 SCHEMATIC FOR MODELS MP500, MP505, MT1970, MK2602, MK2603, MK2606, MK2608, MK2786, MK2787, MK2789, MK3386 & MK3388

Chassis 9H20LZ1, used in Models MP500, MP505, MT1970, MK2602, MK2603, MK2606, MK2608, MK2786, MK2787, MK2789, MK3386, MK3388.

(Continued from preceding page adjacent at left)

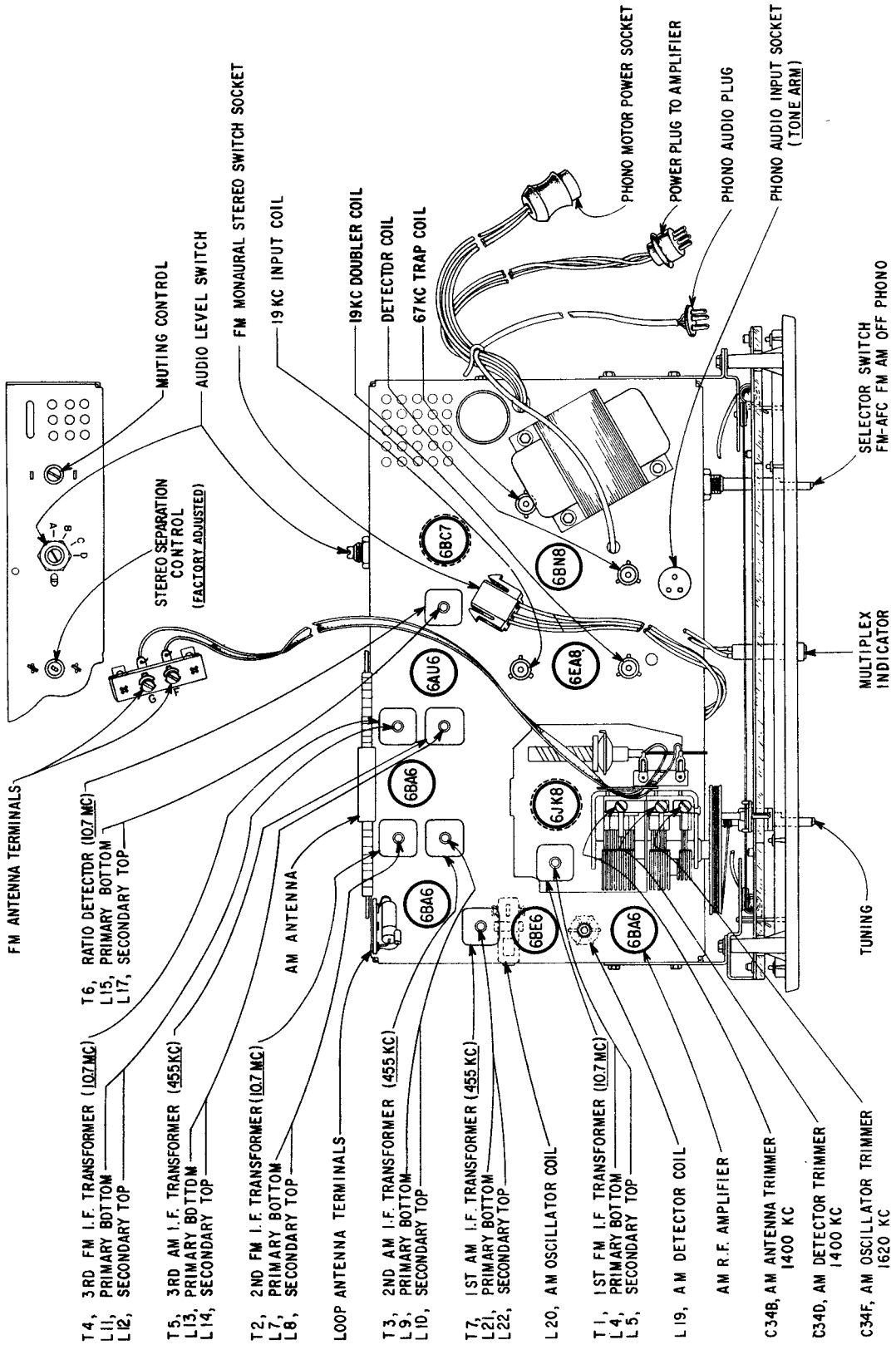

9H20LZ1 TUBE TRIMMER LAYOUT FOR MODELS MP500, MP505, MT1970, MK2602, MK2603, MK2606, MK2608, MK2786, MK2787, MK2789, MK3386 & MK3388

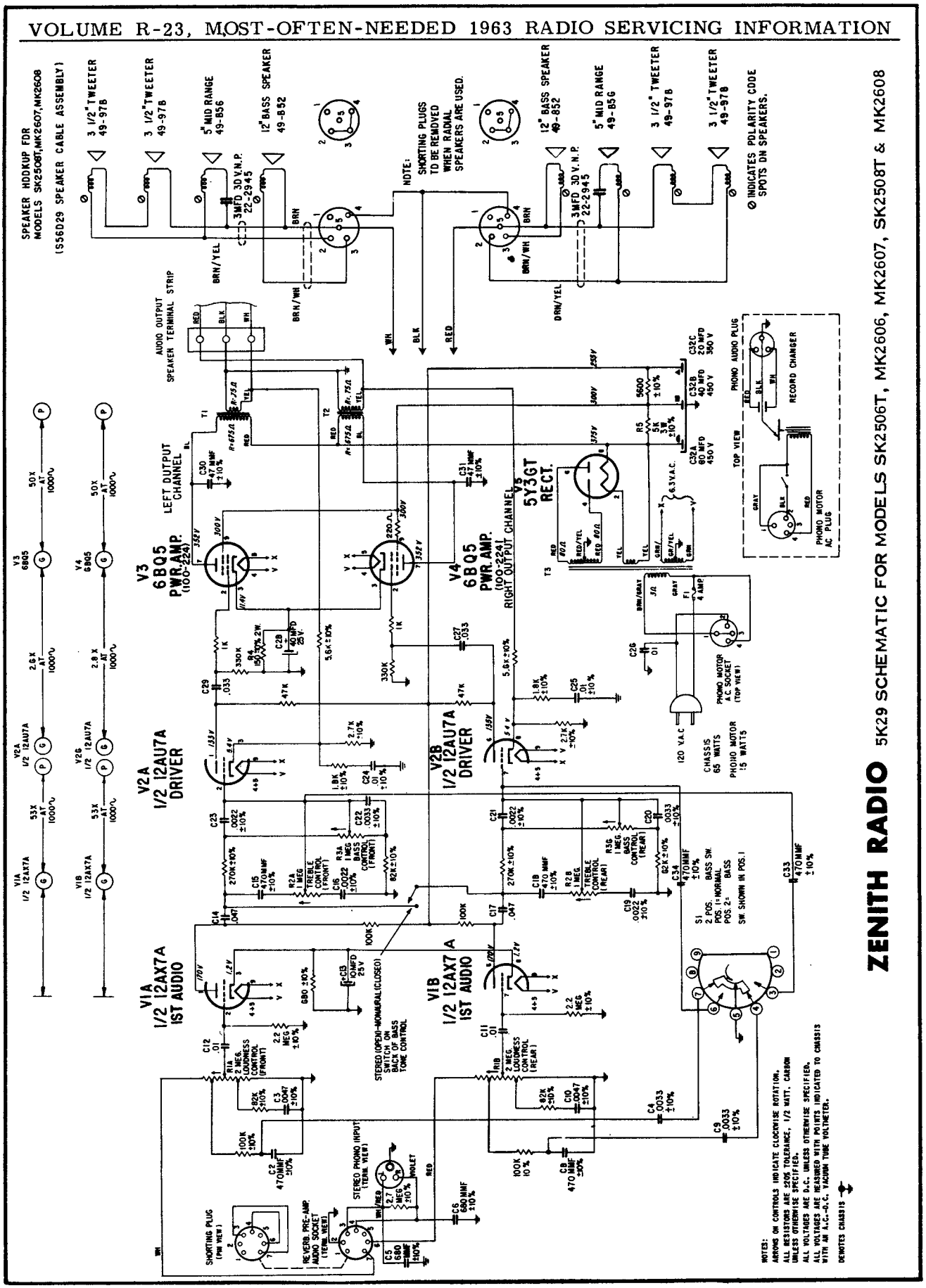
SPEAKER HOOKUP FOR MODELS SK2508T,MK2607,MK2608
(S56D29 SPEAKER CABLE ASSEMBLY)
3 1/2" TWEETER 49-97B
5" MID RANGE 49-85G
12" BASS SPEAKER 49-852
3MFD 30 V.N.P. 22-2945
NOTE: SHORTING PLUGS TO BE REMOVED WHEN RADIAL SPEAKERS ARE USED.
INDICATES POLARITY CODE SPOTS ON SPEAKERS.
AUDIO OUTPUT SPEAKER TERMINAL STRIP
LEFT OUTPUT CHANNEL
RIGHT OUTPUT CHANNEL
V3 6BQ5 PWR.AMP. (100-224)
V4 6BQ5 PWR.AMP. (100-224)
V5 5Y3GT RECT.
V2A 1/2 12AU7A DRIVER
V2B 1/2 12AU7A DRIVER
V1A 1/2 12AX7A 1ST AUDIO
V1B 1/2 12AX7A 1ST AUDIO
STEREO (OPEN)-MONAURAL (CLOSED) SWITCH ON BACK OF BASS TONE CONTROL
STEREO PHONO INPUT (TERM. VIEW)
REVERB. PRE-AMP. AUDIO SOCKET (TERM. VIEW)
SHORTING PLUG (PIN VIEW)
PHONO AUDIO PLUG
RECORD CHANGER
PHONO MOTOR AC PLUG
PHONO MOTOR A.C. SOCKET (TOP VIEW)
120 V.A.C.
CHASSIS 65 WATTS
PHONO MOTOR 15 WATTS
S1 2 POS. BASS SW. POS. 1= NORMAL POS. 2= BASS SW. SHOWN IN POS. 1
ZENITH RADIO 5K29 SCHEMATIC FOR MODELS SK2506T, MK2606, MK2607, SK2508T & MK2608
NOTES:
ARROWS ON CONTROLS INDICATE CLOCKWISE ROTATION.
ALL RESISTORS ARE ±20% TOLERANCE, 1/2 WATT, CARBON UNLESS OTHERWISE SPECIFIED.
ALL VOLTAGES ARE D.C. UNLESS OTHERWISE SPECIFIED.
ALL VOLTAGES ARE MEASURED WITH POINTS INDICATED TO CHASSIS WITH AN A.C.-D.C. VACUUM TUBE VOLTMETER.
DENOTES CHASSIS

ZENITH RADIO CORPORATION

12K25 SCHEMATIC FOR MODELS MK2670, MK2675, MK2685 & 7500

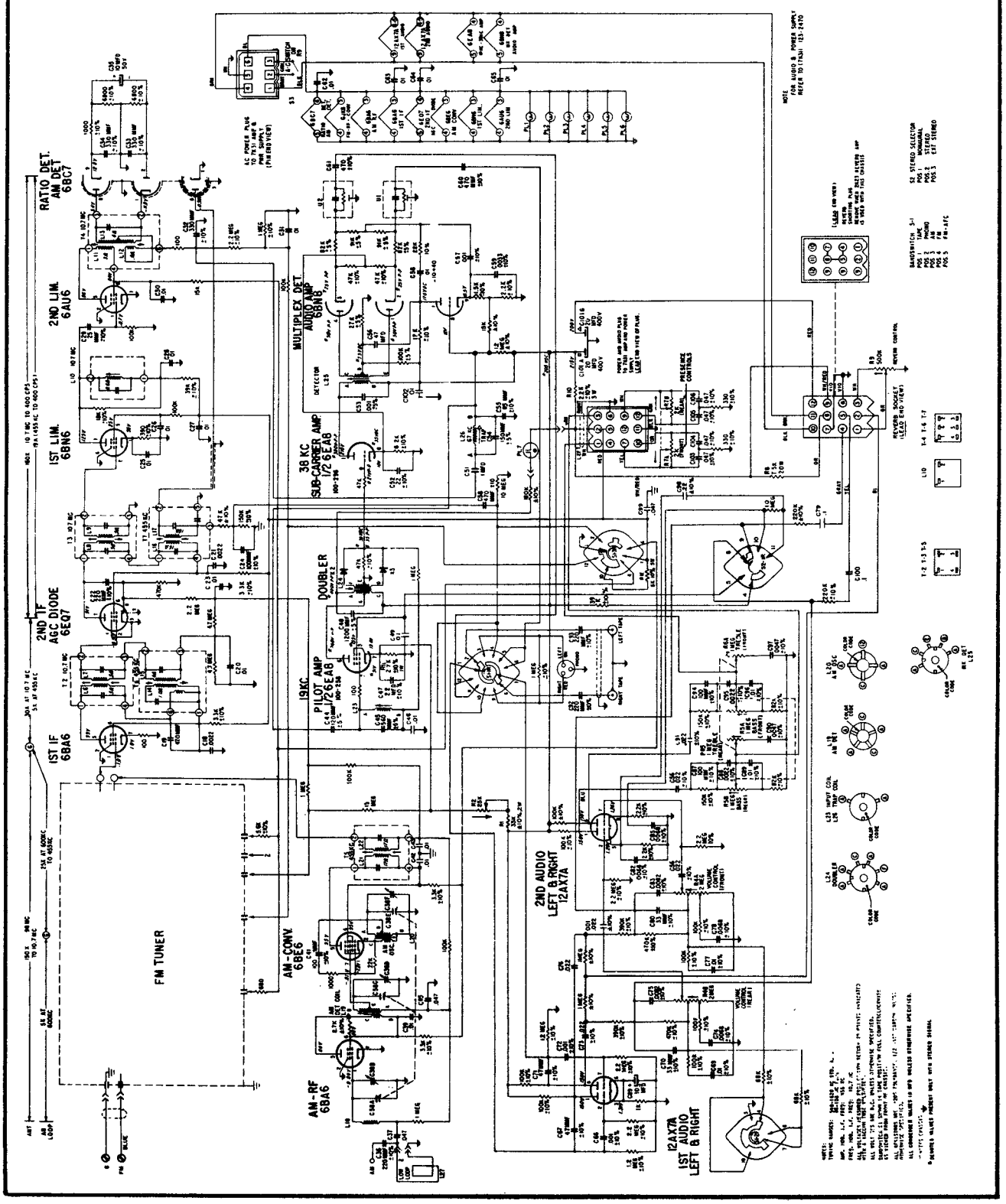

ZENITH RADIO CORPORATION

Chassis 7K31, used in Models MK2670, MK2675, MK2685, & 7500

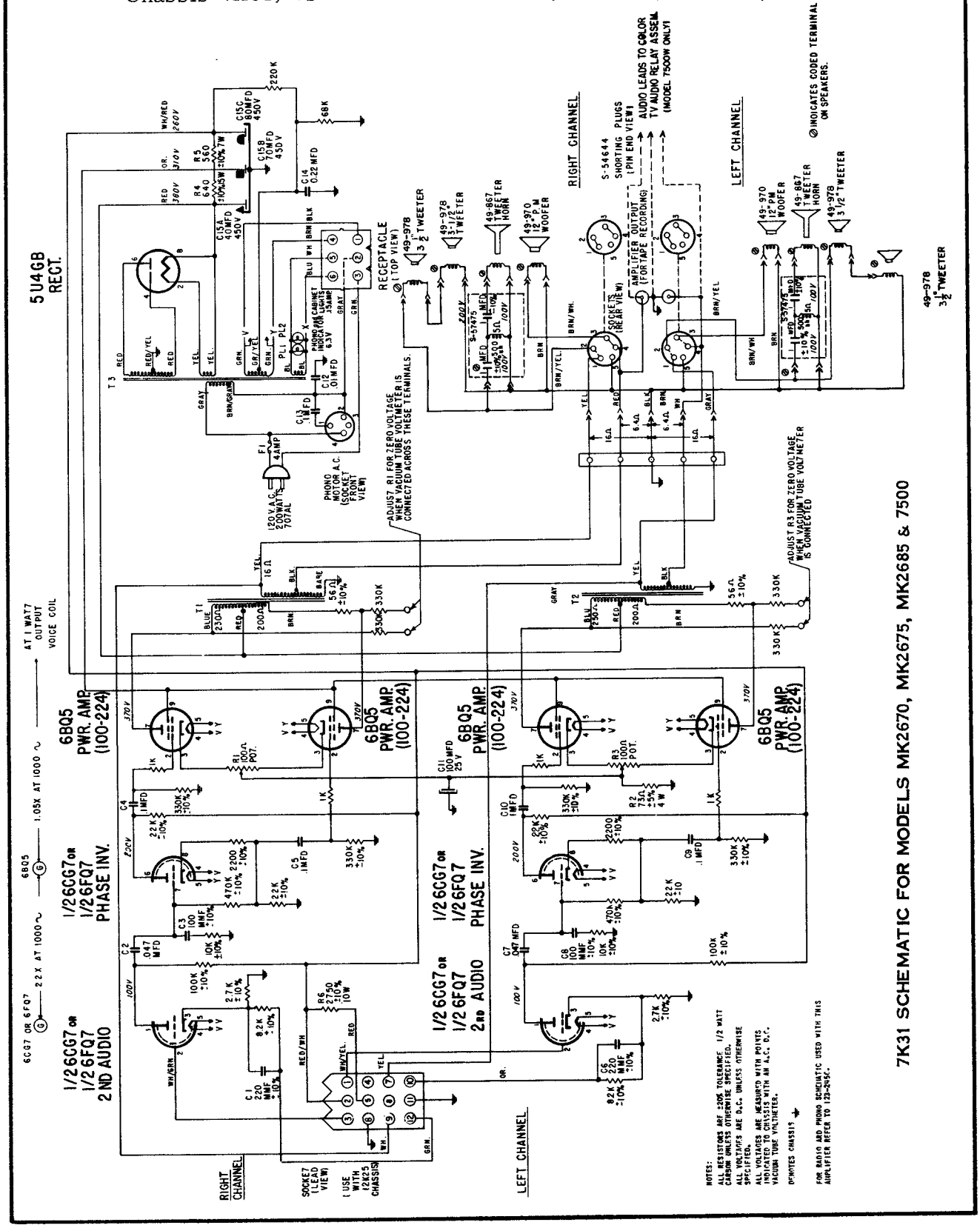

Index

INDEX Continued