# *Most-Often-Needed*

# 1959

Volume 19

# RADIO DIAGRAMS

## *and Servicing Information*

Compiled by

**M. N. BEITMAN**

**SUPREME PUBLICATIONS**

# *Supreme Publications*

1760 Balsam Road, Highland Park, Illinois
(Warehouse and Branch Office in Chicago, Illinois)

## RADIO DIAGRAM MANUALS

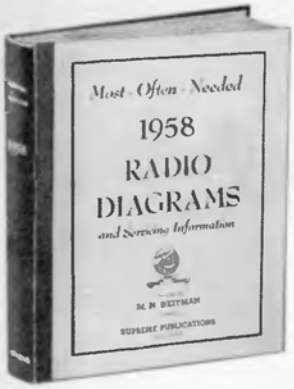


☐ **New 1958** VOLUME 18 **Price $2.50**

Repair quickly all new 1958 sets as well as older radios. This big volume contains clearly printed, large schematics, needed alignment data, replacement parts lists, voltage values, and information on stage gain, location of trimmers, and dial stringing, for all important new 1958 sets. Includes material on portables, clock radios, record changers, FM, and auto sets. A worthy companion to seventeen previous volumes used by over 143,000 shrewd radio servicemen. Large size: 8½ x 11 inches. Manual style binding.
Postpaid, only ..... **$2.50**

### RADIO DIAGRAMS FOR PREVIOUS YEARS

Speed up and simplify all radio repairs. Service radios faster, better, easier, save money and time, use these **SUPREME Most-Often-Needed** diagram manuals to get ahead. At the low cost (only $2 for most volumes) you are assured of having for every job needed diagrams and other essential repair data on 4 out of 5 sets you will ever service. Clearly printed circuits, parts lists, alignment data, and helpful service hints are the facts you need. Average volume has 192 pages, large size 8½ x 11 inches. Manual style binding.

☐ 1957 Volume 17 **$2.50** ☐ 1956 Volume 16 **$2.50** ☐ 1955 Volume 15 **$2.00** ☐ 1954 Volume 14 **$2.50** ☐ 1953 Volume 13 **$2.50** ☐ 1952 Volume 12 **$2.50**

☐ 1951 Volume 11 **$2.50** ☐ 1950 Volume 10 **$2.50** ☐ 1949 Volume 9 **$2.50** ☐ 1948 Volume 8 **$2.00** ☐ 1947 Volume 7 **$2.00** ☐ 1946 Volume 6 **$2.00**

☐ 1942 Volume 5 **$2.00** ☐ 1941 Volume 4 **$2.00** ☐ 1940 Volume 3 **$2.00** ☐ 1939 Volume 2 **$2.00** ☐ 1926-1938 Volume 1 **$2.50**

☐ **INDEX for all Radio and TV Manuals** ..... 25¢


### ☐ RADIO SERVICING COURSE

Here is your practical radio course of 22 easy-to-follow lessons. Review fundamentals, learn new servicing tricks. Just like a $200.00 correspondence course. Everything in radio servicing. With self-testing questions.
New edition. Price only ..... **$2.50**

### ☐ Simplified Radio Servicing by COMPARISON Method


Revolutionary different **COMPARISON** technique permits you to do expert work on all radio sets. Most repairs can be made without test equipment or with only a volt-ohmmeter. Many simple, point-to-point, cross-reference, circuit suggestions locate the faults instantly. Plan copyrighted. Covers every radio set — new and old models. This new servicing technique presented in handy manual form, size 8½ x 11 inches, 92 pages. Over 1,000 practical service hints. 26 large, trouble-shooting blueprints. Charts for circuit analysis. 114 tests using a 5c resistor. Developed by M. N. Beitman. New edition. Price only..... **$1.50**


### ☐ How to Modernize Radios

Cash in by improving and modernizing all out of date radio sets and cabinets. Practical job-sheets with schematics and photographs make this work easy.
Size 8½ x 11 inches. Your price only..... **$1**

## *SUPREME* TELEVISION MANUALS

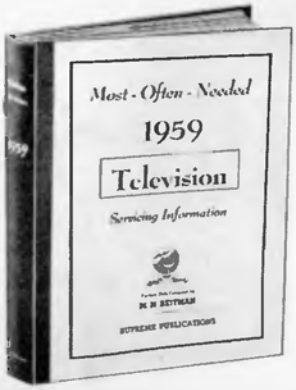


☐ **1959 TV Manual,** TV-15

This new giant volume of 1959 television factory data will give you everything you need to repair and adjust all present-day TV sets. The **television series** manuals are amazing bargains and defy competition. The 1959 volume contains circuit explanations, 192 pages of alignment facts, test patterns, response curves, waveforms, voltage charts, hints, and dozens of mammoth double-page work-bench diagrams. Large size 8½x11 inches. Sturdy covers. Book binding opens flat. Amazing value.
Price postpaid, only.... **$3**

### EARLIER TV MANUALS FOR 1958 TO 1948

*Supreme* **TV** manuals cover all needed service material on every popular TV set of every important manufacturer. Here is helpful, practical, factory-prepared data that will really make TV servicing and adjustment easy for you. *Supreme* giant TV manuals have complete circuits, alignment facts, test patterns, response curves, service hints, recommended changes, voltage charts, waveforms, and many double-page diagram blueprints. Here is your TV service material to help you do more expert work quicker; and priced at only $3. **Radio** manuals described at left.

☐ 1958 Television Manual, TV-14, $3.
☐ ADDITIONAL 1957 TV, Vol. TV-13, $3.
☐ EARLY 1957 TV Manual, TV-12, $3.

☐ 1956 TV Volume TV-11 **$3.00** ☐ 1955 TV Additional, TV-10 **$3.00** ☐ 1955 TV Early, Vol. TV-9 **$3.00** ☐ 1954 TV Volume TV-8 **$3.00**

☐ 1953 TV Volume TV-7 **$3.00** ☐ 1952 TV Volume TV-6 **$3.00** ☐ 1951 TV Volume TV 5 **$3.00** ☐ 1950 TV Volume TV-4 **$3.00**

☐ 1949 TV Volume TV-3 **$3.00** ☐ 1948 TV Volume TV-2 **$3.00** ☐ 1957-58 RCA Volume **$1.50**

### ☐ TELEVISION SERVICING COURSE

Let this new course teach you TV servicing. Amazing bargain, complete only $3, full price for all lessons. Giant in size, mammoth in scope, topics just like a $200.00 correspondence course. Lessons on picture faults, circuits, adjustments, short-cuts, UHF, alignment hints, antenna problems, trouble-shooting, test equipment, picture analysis. Special, only ..... **$3**

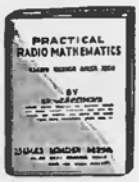


### ☐ RADIO MATHEMATICS

Explains arithmetic and simple algebra in connection with units, color code, meter scales, Ohm's law, alternating currents, ohmmeter testing, wattage rating, series and parallel connections, capacity, inductance, mixed circuits, vacuum tubes, curves, the decibel, etc., and has numerous examples. Only ..... **25¢**

### ☐ Practical Radio & Electronics Course

Here is your complete home study course of 35 lessons designed to train any beginner to be an expert in radio and electronics. Covers every topic of radio, electronics, with lessons on test equipment, FM, TV, radio, etc. Giant 8½ x 11 inches, 3-in-1 volume, includes all lessons, instructor's notes, test questions. New edition. Only..... **$3.95**

☐ **ANSWER BOOK to the above course**..... 25¢

# Admiral

## 5W4 CHASSIS

Models 581 and 582

### REMOVING THE CHASSIS

The front section of the cabinet is removable for alignment and for servicing the component side of the chassis.

To remove the cabinet front from the chassis, proceed as follows:

1. Remove the battery compartment cover.
2. Remove the batteries.
3. Remove the two Phillips head screws in the bottom of the battery compartment.
4. Pull the tuning knob off.
5. Remove the Phillips head screw at the left of the tuning shaft.
6. Gently lift the cabinet front from the cabinet back and chassis.

To remove chassis from cabinet back for servicing the wiring side of the chassis:

7. Remove the other two Phillips head screws in the battery compartment.
8. Make sure tuning gang is closed. Then remove the two Phillips head screws that are visible — one near the tuning capacitor and the other in lower left corner as radio is viewed from the front.
9. Lift speaker from cabinet and away from chassis.
10. Gently lift the printed circuit chassis out of cabinet.

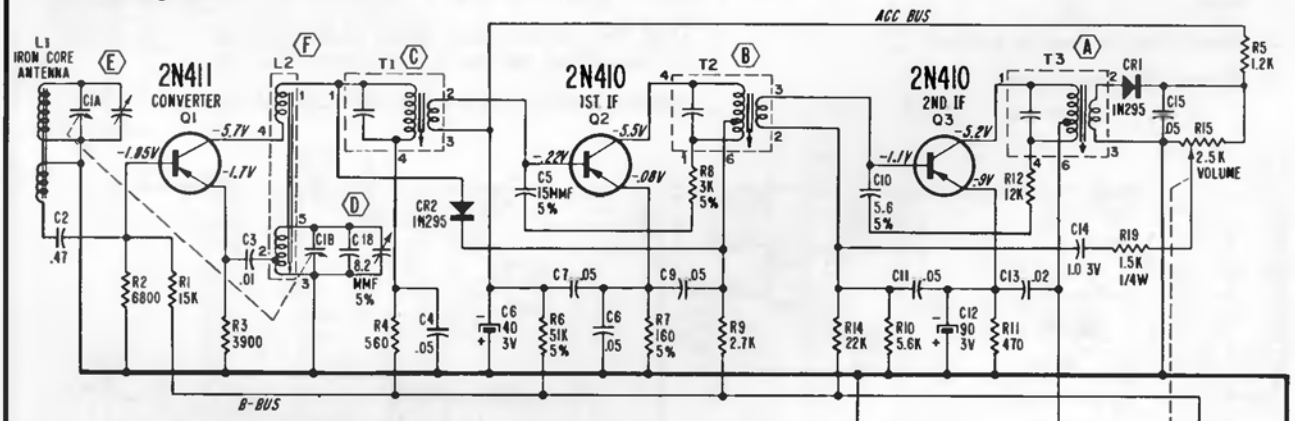


**INTERMEDIATE FREQUENCY:** 455 KC.

### VOLTAGE DATA

Voltages shown measured with no signal, using fresh batteries.
Volume control at minimum; dial set at low frequency end.
All readings made with VTVM between transistor terminals and B plus (ground).

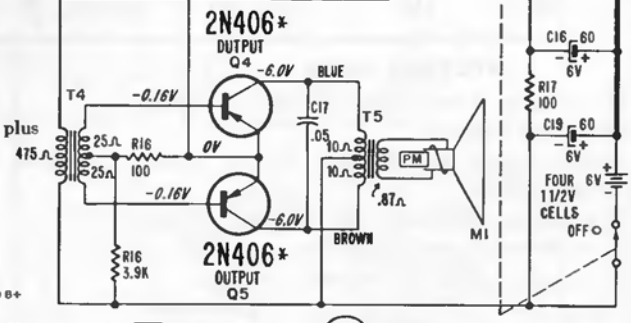


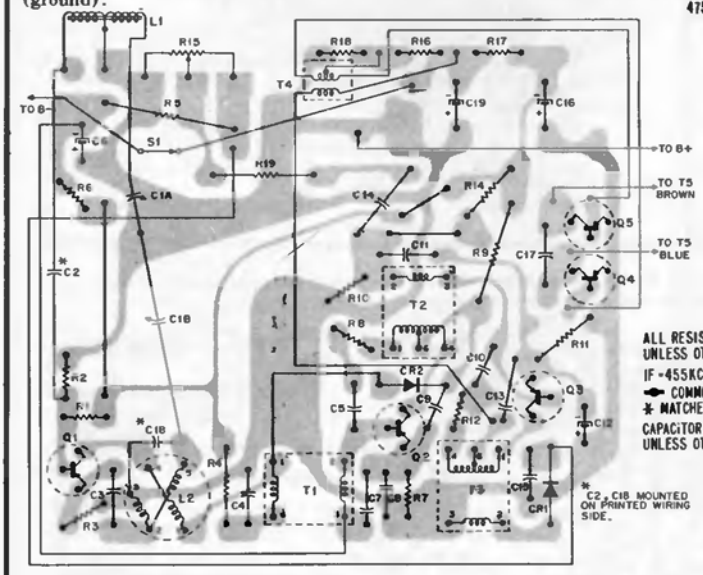


View of Printed Wiring Board. Gray area represents printed wiring black symbols and lines represent components.

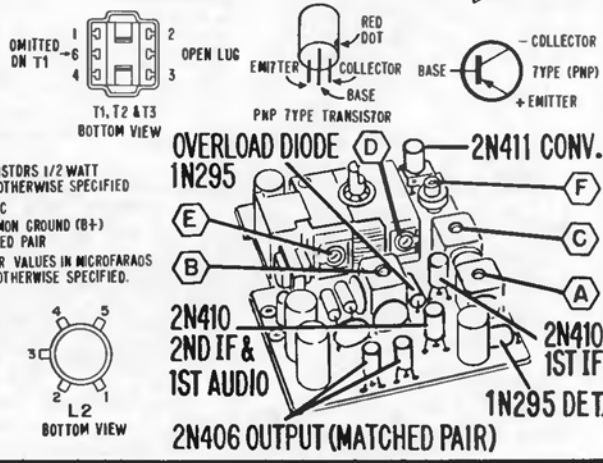


Transistor and Alignment Locations

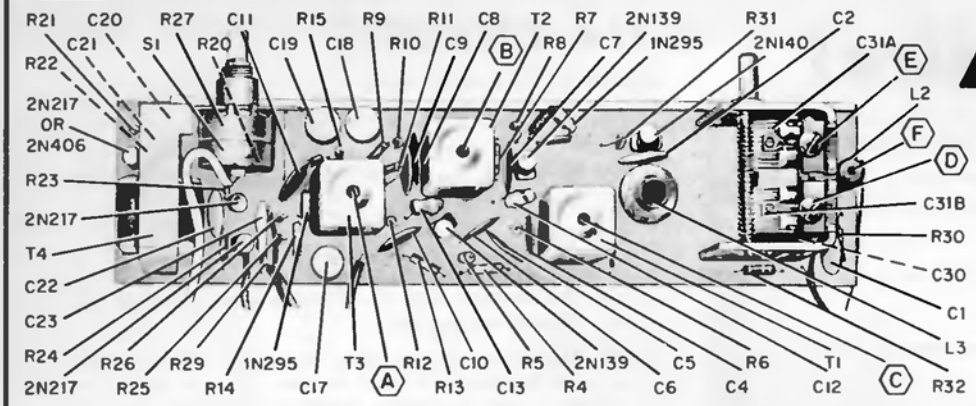


# Admiral

**CHASSIS 6T2**
**MODELS 521 • 528**

I. F. 455 KC.

*TOTAL CURRENT DRAIN APPROXIMATELY 10.5 MA WITH VOLUME CONTROL AT MINIMUM AND NO SIGNAL APPLIED.*

## REMOVING THE CHASSIS

1. Remove **Tuning** knob and **Volume** control knob by working them forward and off the shaft.
2. Open cover on rear of cabinet.
3. Remove the battery case.
4. On the front of the cabinet, *loosen* the two Phillips head screws adjacent the tuning shaft.
5. *Loosen* the hex nut that secures the **Volume** control to front of case.
6. Hold the printed circuit board while removing the two screws and hex nut, to prevent damage.
7. Gently lift the circuit board from within cabinet.

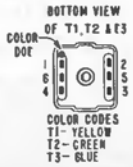



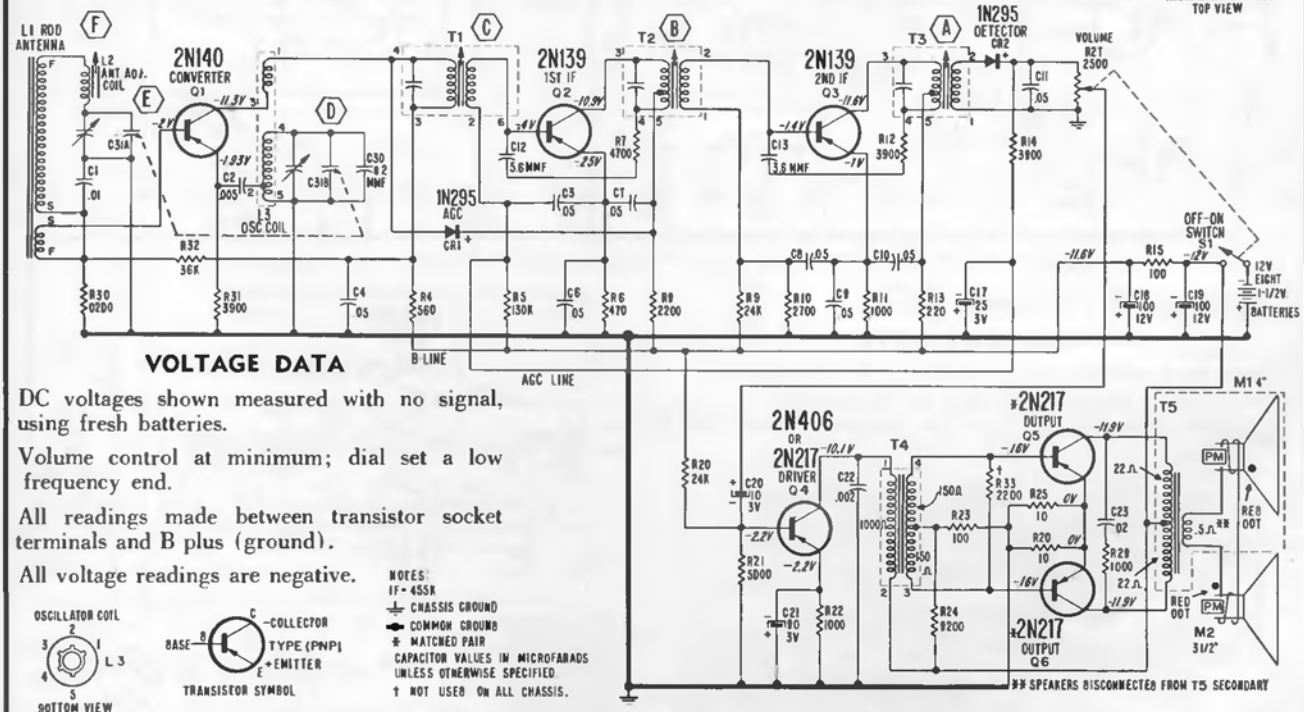


## VOLTAGE DATA

DC voltages shown measured with no signal, using fresh batteries.

Volume control at minimum; dial set a low frequency end.

All readings made between transistor socket terminals and B plus (ground).

All voltage readings are negative.







NOTES:
IF - 455K
CHASSIS GROUND
COMMON GROUND
* MATCHED PAIR
CAPACITOR VALUES IN MICROFARADS UNLESS OTHERWISE SPECIFIED.
† NOT USED ON ALL CHASSIS.

View of Printed Wiring Board. NOTE: Gray area represents printed wiring; black symbols and lines represent components and wiring on opposite side.

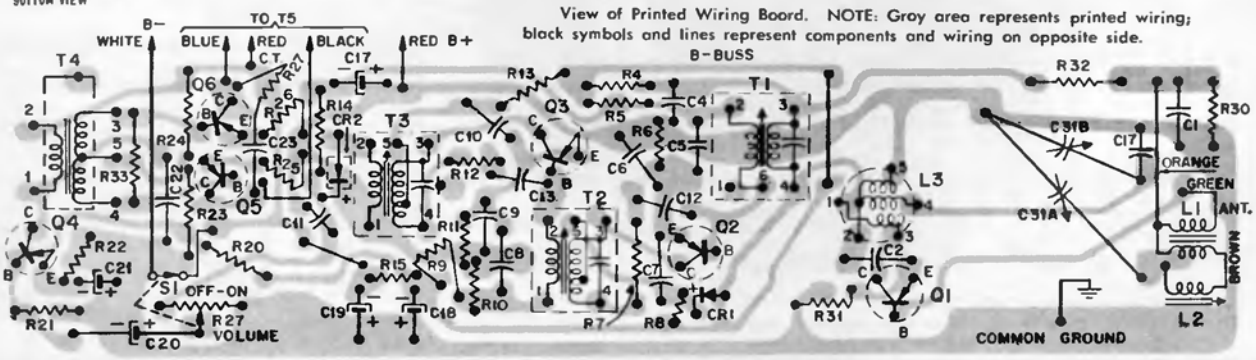

# Admiral

**CHASSIS 8M1 MODELS 801 • 802 • 808**

### REMOVING THE CHASSIS

To remove the cabinet front from the chassis, proceed as follows:

1. Remove the battery compartment cover.
2. Remove the batteries.
3. Remove the four Phillips head screws that are visible within the battery compartment.
4. The tuning knob hub is a thumb screw. Remove it by turning counterclockwise.
5. Remove tuning knob by working it forward and off the tuning shaft.
6. Remove the Phillips head screw at the left of the tuning shaft.
7. Gently lift the cabinet front from the cabinet back and chassis.

To remove chassis from cabinet back for servicing the wiring side of the chassis:

8. Make sure tuning gang is closed. Then remove the two Phillips head screws that are visible—one near the tuning capacitor and the other in lower left corner as radio is viewed from the front.
9. Lift speaker from cabinet and away from chassis.
10. Gently lift out wiring side of chassis from cabinet.

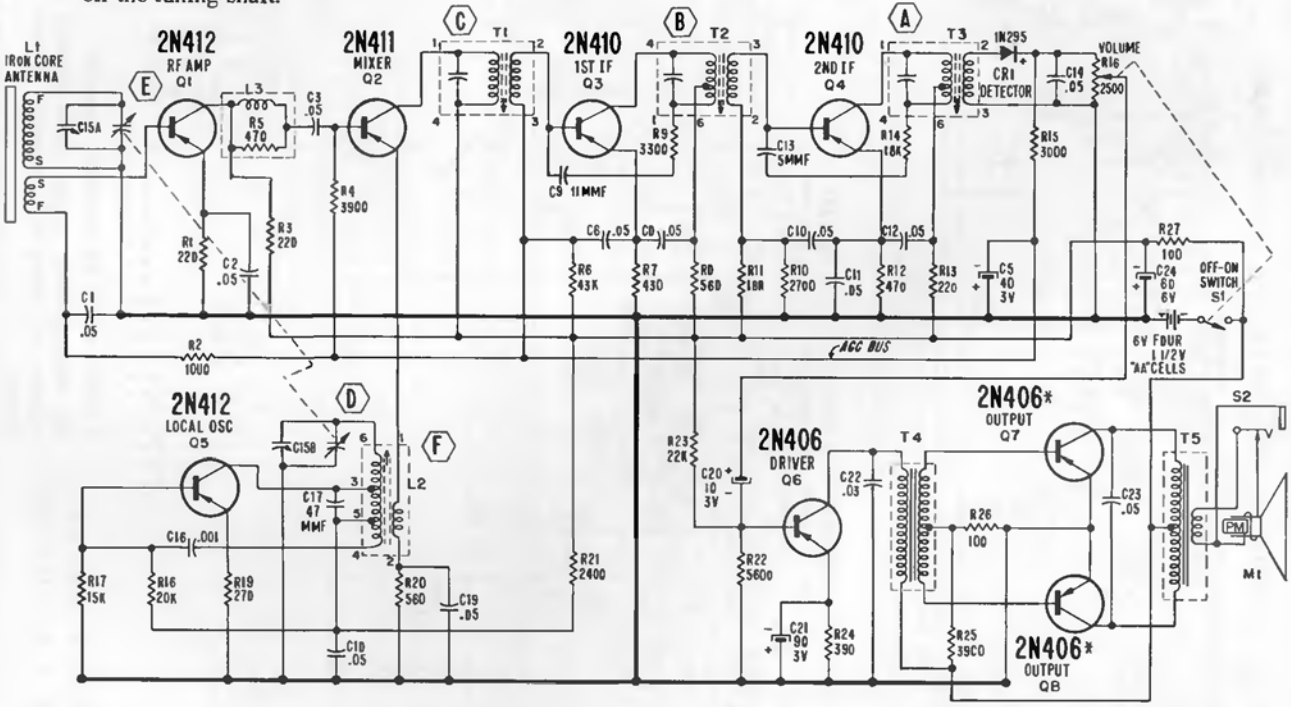


IF • 455 KC
COMMON GROUND (B+)
* MATCHED PAIR
CAPACITOR VALUES IN MICROFARADS UNLESS OTHERWISE SPECIFIED

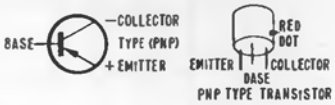


I. F. 455 KC.


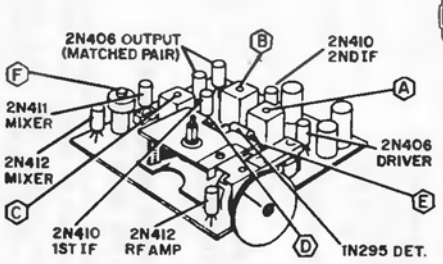


Transistor and Alignment Locations

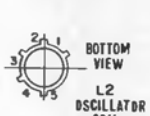


### VOLTAGE DATA

Voltages shown measured with no signal, using fresh batteries.
Volume control at minimum; dial set at low frequency end.
All readings made with VTVM between transistor terminals and B plus (ground).
All voltages are negative.

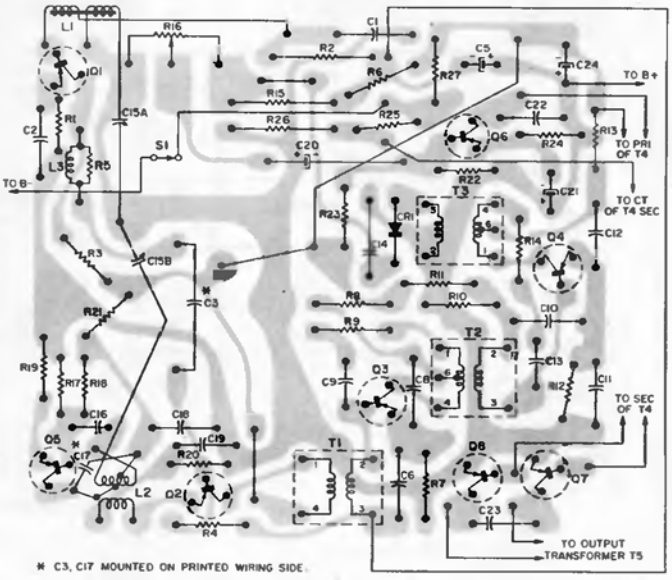


View of Printed Wiring Board. Gray area represents printed wiring, black symbols and lines represent components.

# Admiral

Models 392 and 393, use 7N1 Tuner & 4S2 Amplifier; Models 462 and 463, use 7N1A Tuner & 4S2 Amplifier.

(Schematic of 7N1A Tuner on this page, balance of material on page 7.)

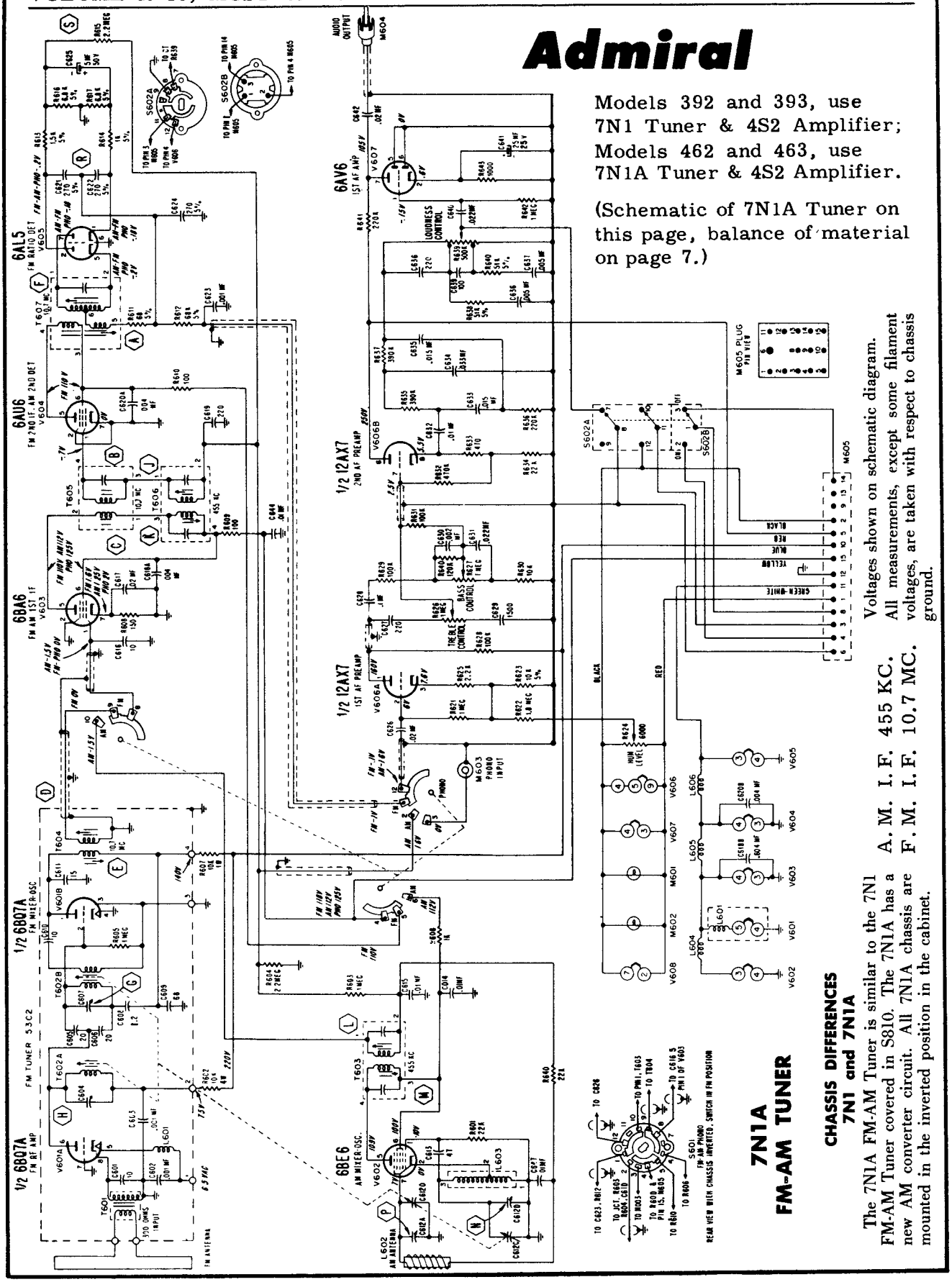


Voltages shown on schematic diagram. All measurements, except some filament voltages, are taken with respect to chassis ground.

A. M. I. F. 455 KC.
F. M. I. F. 10.7 MC.

## 7N1A FM-AM TUNER

### CHASSIS DIFFERENCES 7N1 and 7N1A

The 7N1A FM-AM Tuner is similar to the 7N1 FM-AM Tuner covered in S810. The 7N1A has a new AM converter circuit. All 7N1A chassis are mounted in the inverted position in the cabinet.

# Admiral

Models 392, 393, 462, and 463.

## 7N1 and 7N1A AM-FM TUNERS and 4S2 HI-FI AMPLIFIER

(Continued from page 6)

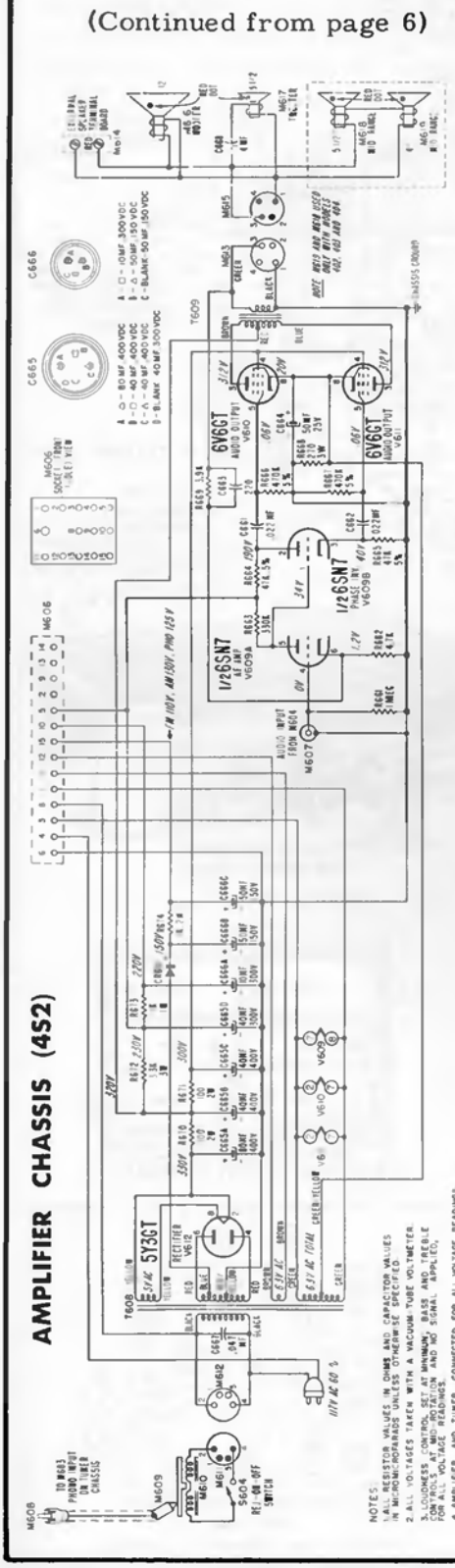


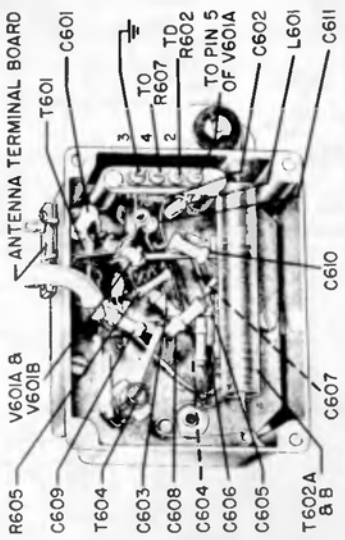


Bottom View of FM Tuner Sub-chassis. Location of components shown.

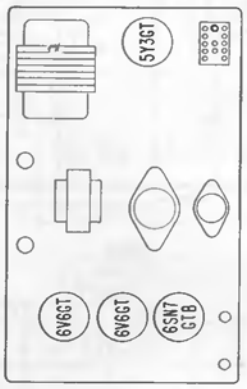


Top View of Amplifier Chassis. Tube locations shown.

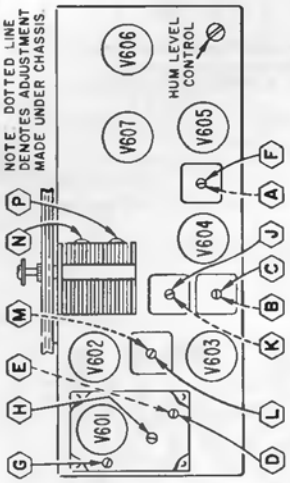


Top View of Tuner Chassis. Tube locations and alignment points shown.

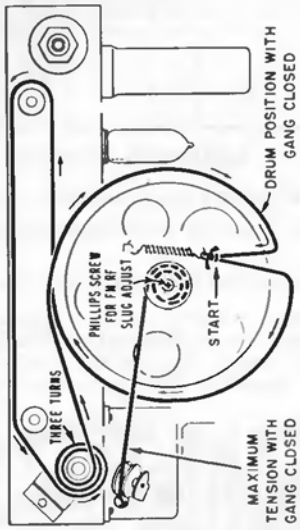


Dial Stringing (Chassis 7N1A).

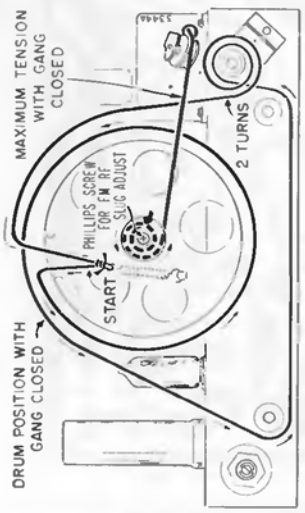


Dial Stringing (Early Production).

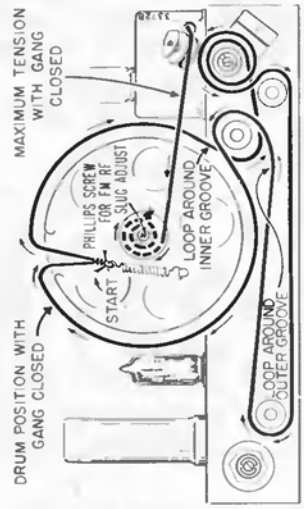


Dial Stringing (Present Production).

Material applicable to 7N1 and 7N1A Tuners and 4S2 Amplifier.

# Admiral

Chassis 8S1, Models 561, 566, exact material.
Chassis 8S1A, Models 811, 816, include clock.

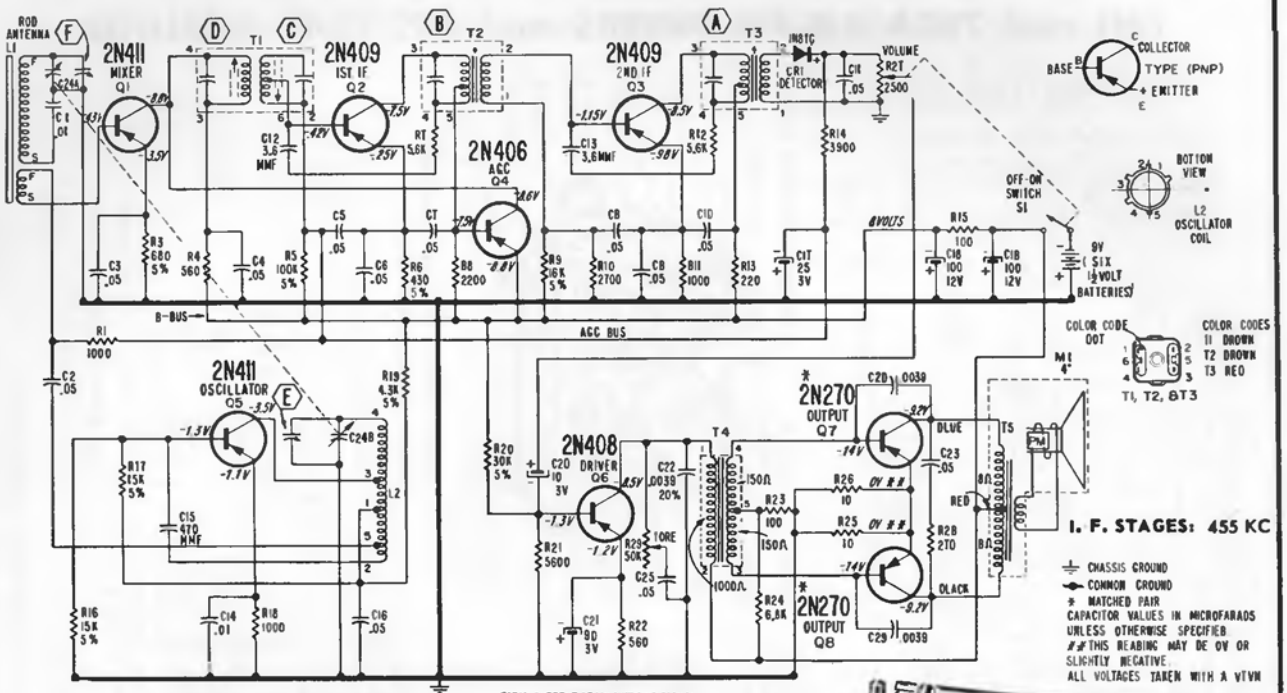


## REMOVING CHASSIS

1. Remove 2 screws near front edge of cabinet bottom.
2. Remove 2 screws from upper section of cabinet back.
3. Pull chassis and front panel free of cabinet.

The speaker, volume and tone control, and printed chassis board are all fastened separately with screws to the front panel. Remove them individually as required by removing their mounting screws.

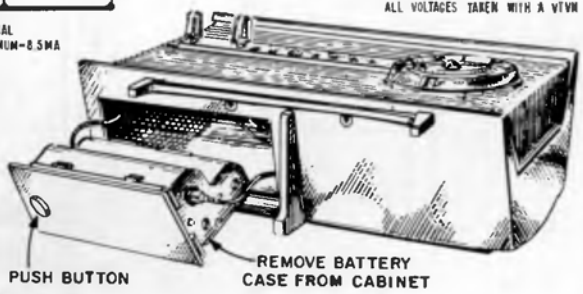


Removing Battery Case.

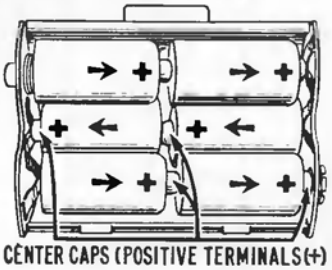


Battery Case Showing Batteries in Correct Position.

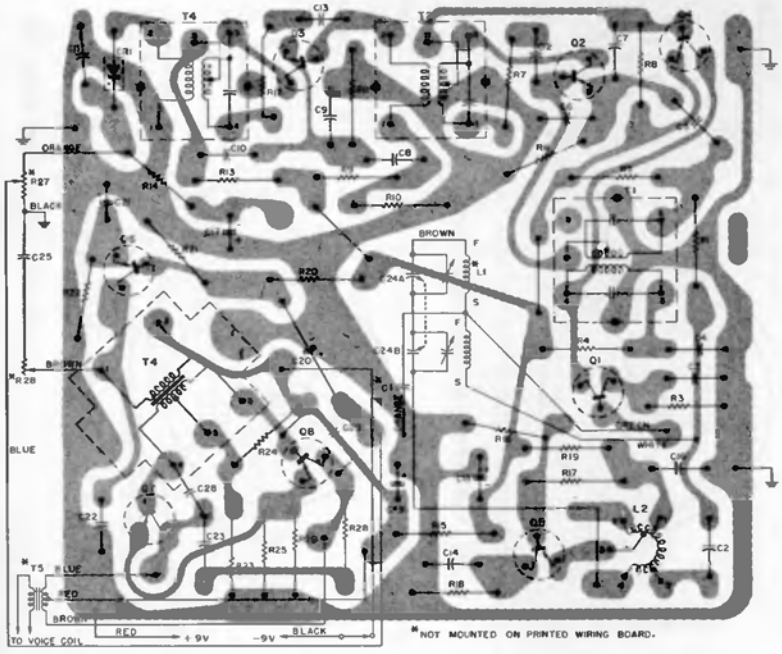


View of Printed Wiring Board. Gray area represents printed wiring, black symbols and lines represent components.

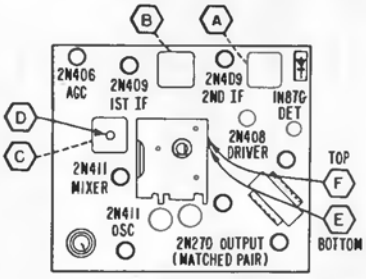


NOTE: DOTTED LINES INDICATE ADJUSTMENT UNDER BOARD

Transistor and Alignment Locations.

# Admiral 12B1-12B1A-5T4A CHASSIS

Models 632, 633, 634, 642, 643, 644, 649, 654, 662, 663, 664, 671, use Chassis 12B1. Chassis 12B1A has a different panel; used in later Model 649. Same model numbers with prefix SS use auxiliary stereo unit 5T4A.

(Additional material on pages 10-11)

Run changes refer to 12B1 schematic diagram on next two pages.

(10) Start of production 12B1.

(11) R25 (15K, 1W) changed to (22K, 1W) to permit full interchangeability 6BE6 tubes. R33 changed to (390K, 1/2W); R34 to (100K, 1/2W); and C39 to (.002MF) to improve AM operation. R70 (470K, 1/2W) added between M11 and M12 to minimize rumble.

(12) R70 (470K, 1/2W) removed to increase channel seperation for stereo operation.

(13) To insure proper operation of OFF-ON-POWER relay at low line voltages, R45 (39K, 2W) removed and R71 (33K, 2W) added in its place.

(14) To reduce possibility of regeneration in strong signal areas, C18 (.02MF) and C21 (.02MF) removed. R72 (75K 5%) and R73 (75K, 5%) added to IF section. R65 (160K) connected to B+ 200V.
For standardization of parts, C19A and B (dual .004MF; V2 screen and filament bypass) removed. C19 (.01MF) V2 screen bypass and C72 (.005MF) V2 filament bypass added. C22A and B (dual .004MF; V3 screen and filament bypass) removed. C22 (.01MF) V3 screen bypass and C73 (.005MF) V3 filament bypass added. C24A and B (dual .004MF; V4 screen and filament bypass) removed. C24 (.01MF) V4 screen bypass and C74 (.005MF) V4 filament bypass added. V8 changed to ECC83. For improved frequency response, C55 changed to .02MF, C64 changed to .02MF, C66 and C67 each changed to .022MF. C75 (.001MF) added from plate to screen of V11 C76 (.001MF) added from plate to screen of V12. To increase AM audio output, R33 changed to 100K and R34 changed to 390K. R74 (100K, 1W) added.

(15) R75 (10 ohms, 1/2 watt) added between pin 2 of V18 and R2 to reduce possibility of RF regeneration.

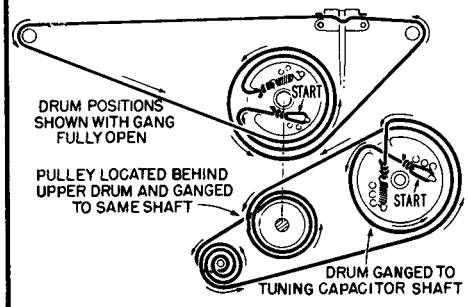


Stringing Diagram. (Early Production)

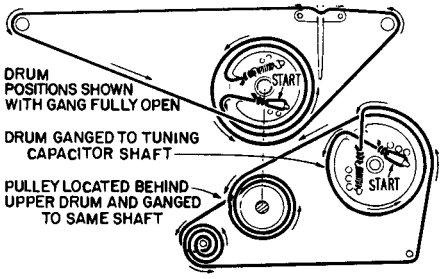


Stringing Diagram.

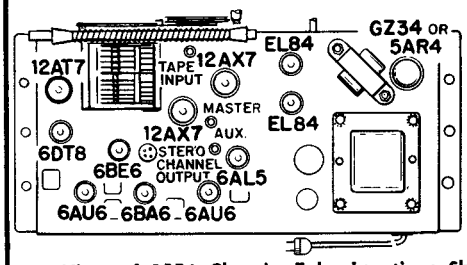


Top View of 12B1 Chassis, Tube Locations Shown.

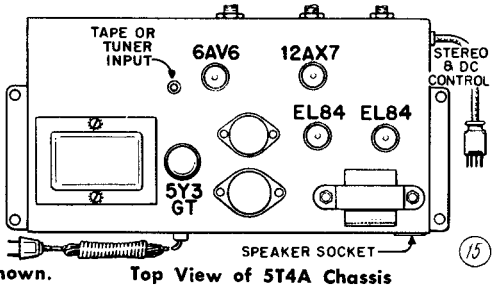


Top View of 5T4A Chassis

## Schematic of 5T4A Amplifier Chassis Stamped Run 10.

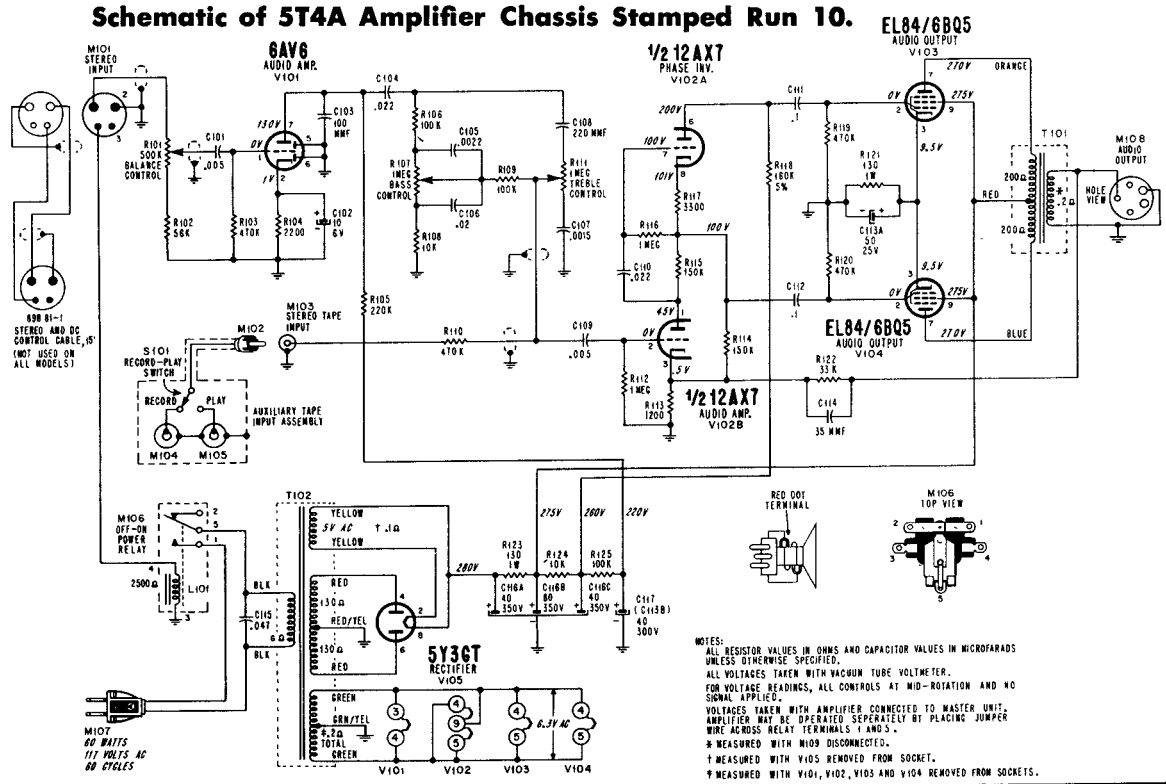


NOTES:
ALL RESISTOR VALUES IN OHMS AND CAPACITOR VALUES IN MICROFARADS UNLESS OTHERWISE SPECIFIED.
ALL VOLTAGES TAKEN WITH VACUUM TUBE VOLTMETER.
FOR VOLTAGE READINGS, ALL CONTROLS AT MID-ROTATION AND NO SIGNAL APPLIED.
VOLTAGES TAKEN WITH AMPLIFIER CONNECTED TO MASTER UNIT. AMPLIFIER MAY BE OPERATED SEPERATELY BY PLACING JUMPER WIRE ACROSS RELAY TERMINALS 1 AND 5.
* MEASURED WITH M109 DISCONNECTED.
† MEASURED WITH V105 REMOVED FROM SOCKET.
‡ MEASURED WITH V101, V102, V103 AND V104 REMOVED FROM SOCKETS.

ADMIRAL Schematic diagram of 12B1, 12B1A, Run 15, Continued

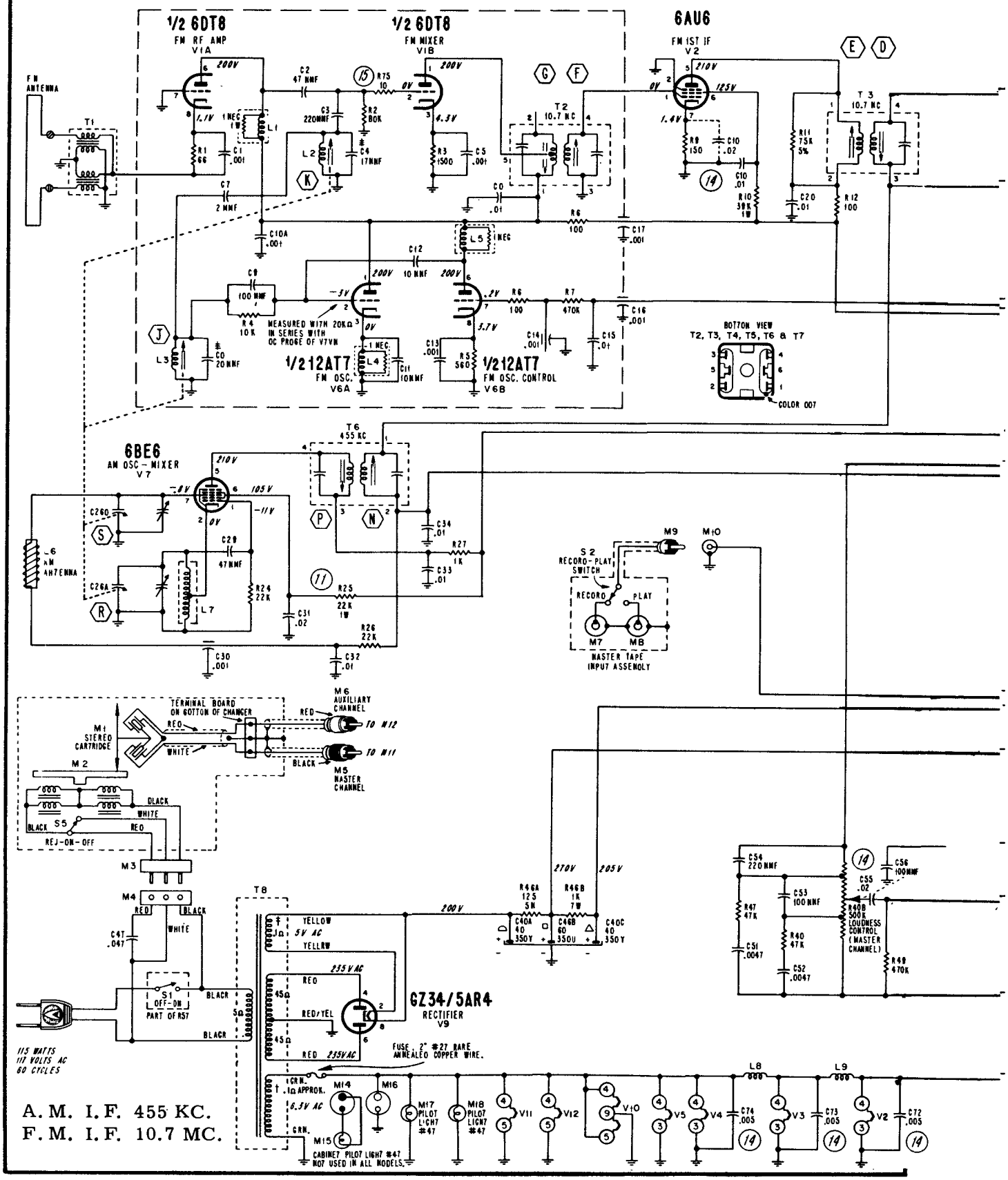

## ADMIRAL Schematic Diagram of 12B1-12B1A Radio Chassis Stamped Runs 10 through 15.

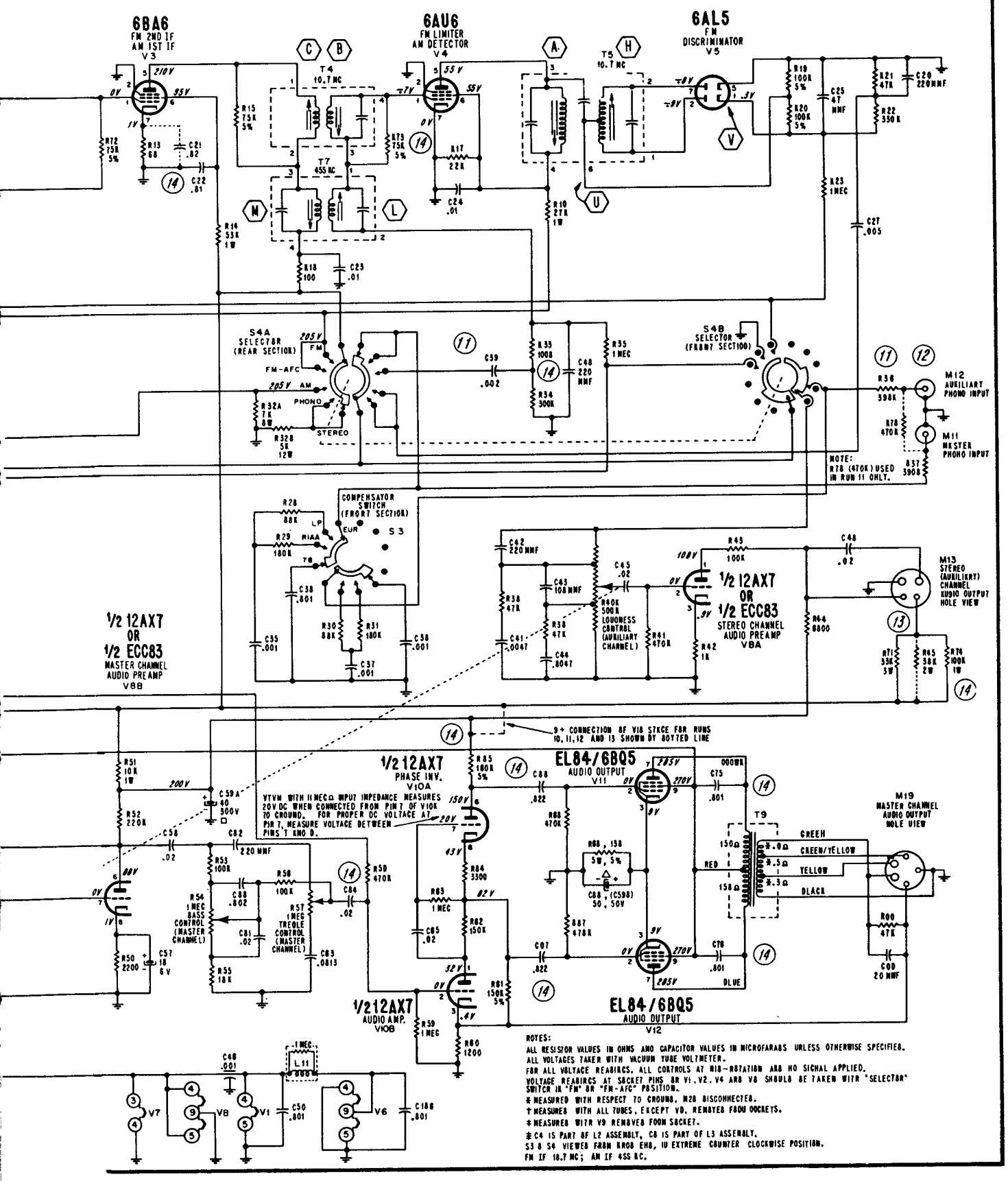

**ARVIN**
**Model 2585**
**Chassis 1.45000**

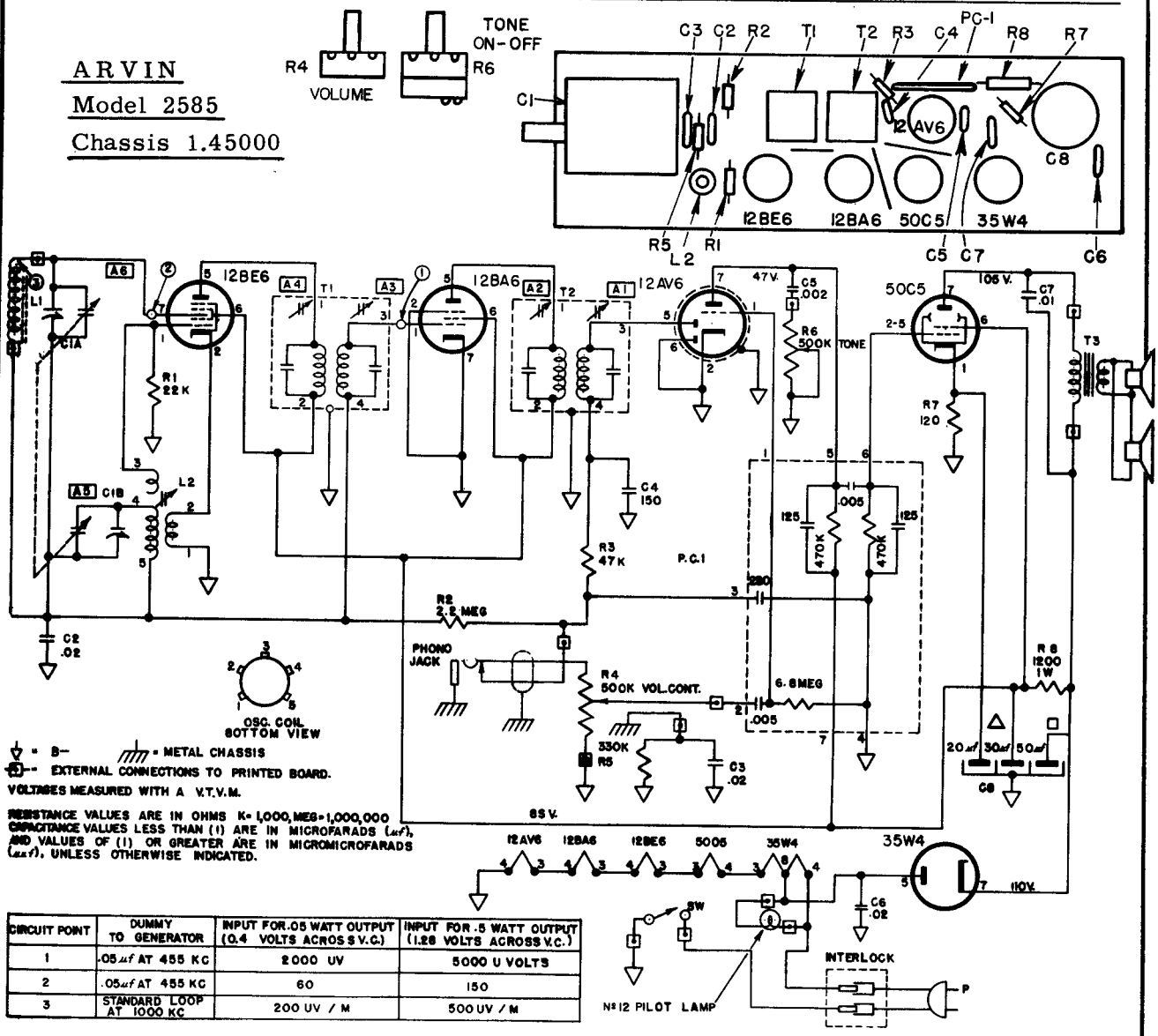


| CIRCUIT POINT | DUMMY TO GENERATOR | INPUT FOR .05 WATT OUTPUT (0.4 VOLTS ACROSS V.C.) | INPUT FOR .5 WATT OUTPUT (1.26 VOLTS ACROSS V.C.) |
|---|---|---|---|
| 1 | .05 µf AT 455 KC | 2000 UV | 5000 U VOLTS |
| 2 | .05 µf AT 455 KC | 60 | 150 |
| 3 | STANDARD LOOP AT 1000 KC | 200 UV / M | 500 UV / M |

## ALIGNMENT PROCEDURE

Output meter connection.....Across speaker voice coil
Connection of generator ground lead .....Floating ground
Position of Volume Control .....Fully clockwise

| Position of Variable | Frequency of Generator | Dummy Antenna | Generator Output Connection | Trimmers Adjusted in Order Shown for Maximum Output | Functions of Trimmer |
|---|---|---|---|---|---|
| Open | 455 | .05 µf | Pin 7 12BE6 | A1, A2, A3, A4 | I.F. |
| Open | 1670 | | * Test Loop | A5 | Oscillator |
| 1400 | 1400 | | * Test Loop | A6 | Antenna |
| 600 | 600 | | * Test Loop | Check Point | |

* Standard Hazeltine Test Loop Model 1150 or 3 turns of wire about 6" in diameter placed about one foot from the set loop.

The alignment procedure should be repeated in the original order for greatest accuracy. Always keep the output from the signal generator at its lowest possible value to make the AVC action of the receiver ineffective.

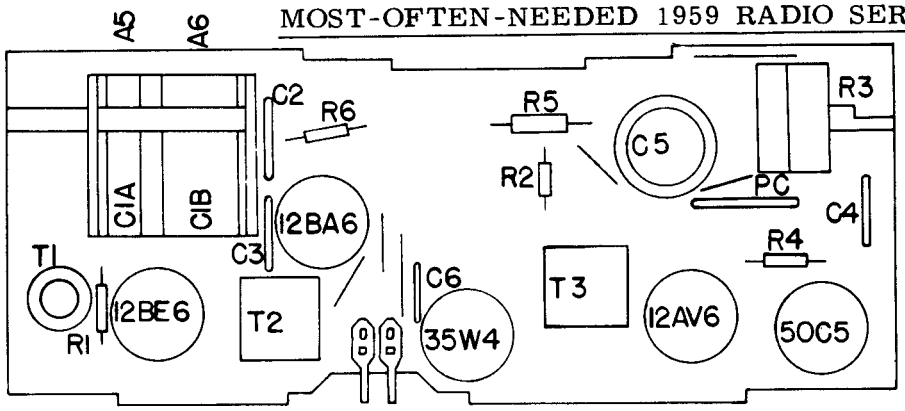


**ARVIN**

Model 2581

Chassis 1.43800

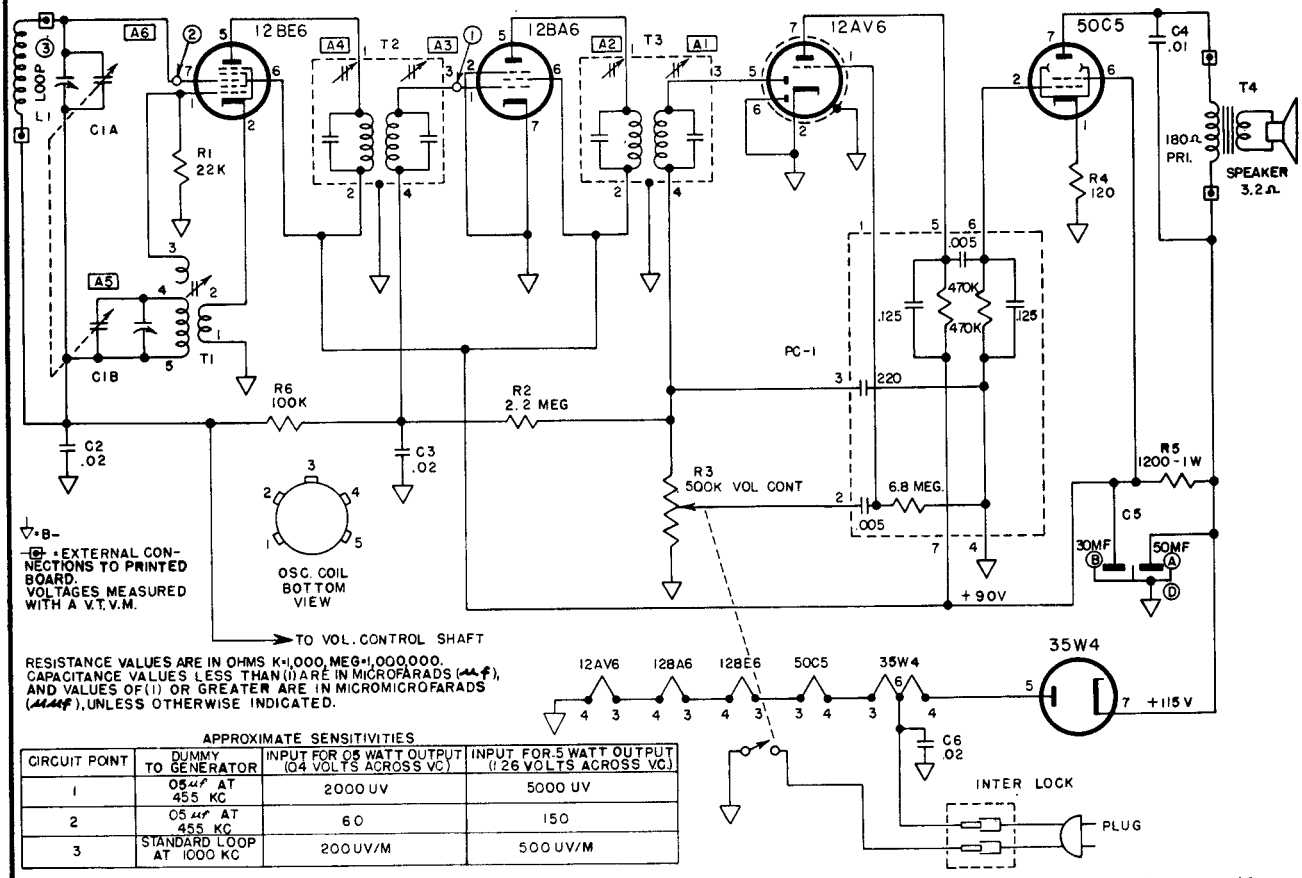


RESISTANCE VALUES ARE IN OHMS K=1,000, MEG=1,000,000.
CAPACITANCE VALUES LESS THAN (1) ARE IN MICROFARADS (μf), AND VALUES OF (1) OR GREATER ARE IN MICROMICROFARADS (μμf), UNLESS OTHERWISE INDICATED.

APPROXIMATE SENSITIVITIES

| CIRCUIT POINT | DUMMY TO GENERATOR | INPUT FOR .05 WATT OUTPUT (.04 VOLTS ACROSS VC) | INPUT FOR .5 WATT OUTPUT (1.26 VOLTS ACROSS VC) |
|---|---|---|---|
| 1 | .05μf AT 455 KC | 2000 UV | 5000 UV |
| 2 | .05μf AT 455 KC | 60 | 150 |
| 3 | STANDARD LOOP AT 1000 KC | 200 UV/M | 500 UV/M |

ALIGNMENT PROCEDURE Output meter connection Across speaker voice coil
Output meter reading to indicate 500 milliwatts (standard output)... 1.26 volts
Connection of generator ground lead ..... Floating ground
Generator modulation ..... 30% 400 cycles

| Position of Variable | Frequency of Generator | Dummy Antenna | Generator Output Connection | Trimmers Adjusted in Order Shown for Maximum Output | Function of Trimmer |
|---|---|---|---|---|---|
| Open | 455 Kc | .05 μ fd | Pin 7 12BE6 | A1, A2, A3, A4 | I.F. |
| Open | 1670 Kc | | * Test Loop | A5 | Oscillator |
| 1400 | 1400 Kc | | * Test Loop | A6 | Antenna |
| 1000 | 1000 Kc | | * Test Loop | Fan C1A Plates | |
| 600 | 600 Kc | | * Test Loop | Fan C1A Plates | |

* Standard Hazeltine Test Loop Model 1150 or 3 turns of wire about 6" in diameter placed about one foot from the set loop.

ARVIN Industries

Model 3588

Chassis 1.45200

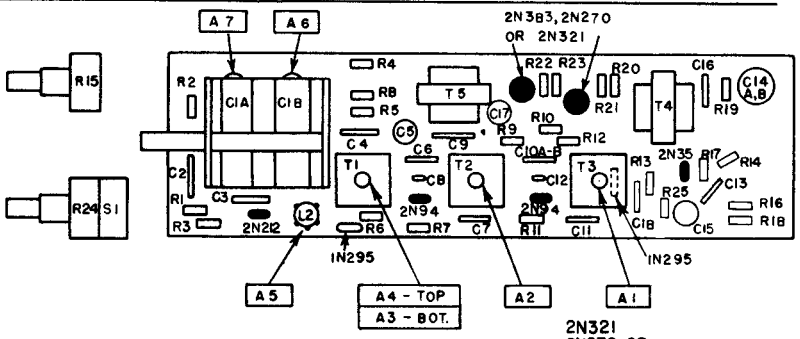


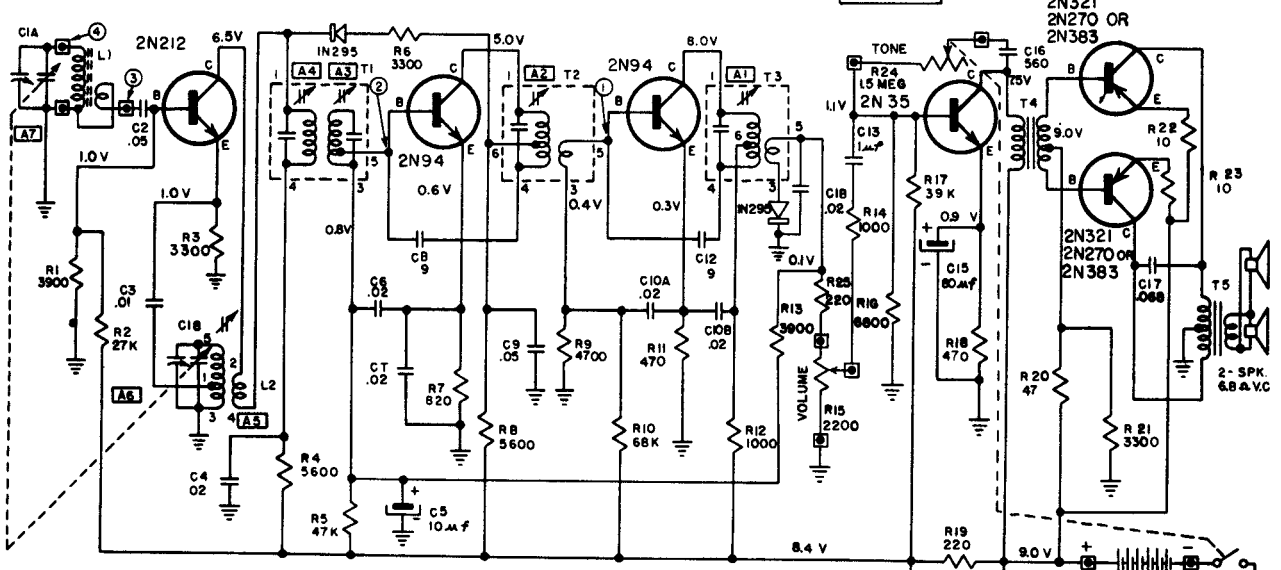


RESISTANCE VALUES ARE IN OHMS ; K = 1000.

CAPACITANCE VALUES LESS THAN 1.0 ARE IN MICROFARADS (µf) AND VALUES GREATER THAN 1.0 ARE IN MICRO-MICROFARADS (µµf) EXCEPT WHERE NOTED.

VOLTAGE READINGS TO COMMON GROUND ARE MEASURED WITH VACUUM TUBE VOLTMETER UNDER NO SIGNAL CONDITIONS WITH TUNING CAPACITOR CLOSED AND VOLUME CONTROL AT MAXIMUM CLOCKWISE ROTATION.

| SIGNAL TEST POINT | TEST FREQUENCY | SERIES CAPACITOR TO GENERATOR | INPUT FOR .05 WATT OUTPUT (0.4 V ACROSS 3.2Ω) |
|---|---|---|---|
| ① | 455 KC | .05 µf | 2000 µV |
| ② | 455 KC | .05 µf | 65 µV |
| ③ | 455 KC | .05 µf | 5 µV |
| ④ | 1000 | STANDARD LOOP | 150 µV/M |

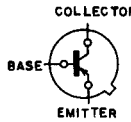


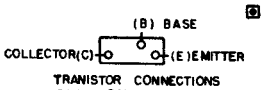


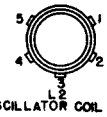


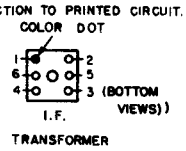


COMMON GROUND SYMBOL

EXTERNAL CONNECTION TO PRINTED CIRCUIT.

## ALIGNMENT PROCEDURE

Output meter reading to indicate 50 milliwatts ..... 0.4V

Output meter connection..... Across speaker voice coil

Connection of generator ground lead..... Common Ground

Generator Modulation..... 30% 400 cycles

Position of volume control..... Fully clockwise

| Position of Variable | Generator Frequency | Dummy Antenna | Generator Connections | Trimmers Adj. in order shown for Max. Output | Function of Trimmer |
|---|---|---|---|---|---|
| Open | 455 Kc | .05 µf | C1A | A1 (Top of T3) | I.F. |
| | | | | A2 (Top of T2) | I.F. |
| | | | | A3(Bottom of T1) | I.F. |
| | | | | A4 ( Top of T1) | I.F. |
| Open | 1670 Kc | | *Test Loop | A6 | Oscillator |
| 1400 Kc | 1400 Kc | | *Test Loop | A7 | Antenna |
| 600 Kc | 600 Kc | | *Test Loop | Check Point | |

*Standard Hazeltine Test Loop Model 1150 or 3 turns of wire about 6" in diameter placed about one foot from the set loop.

ARVIN Industries

Model 5583, Chassis 1.44200

Model 2584, Chassis 1.44100

differs from this material by not using a clock timer and in employing two speakers.

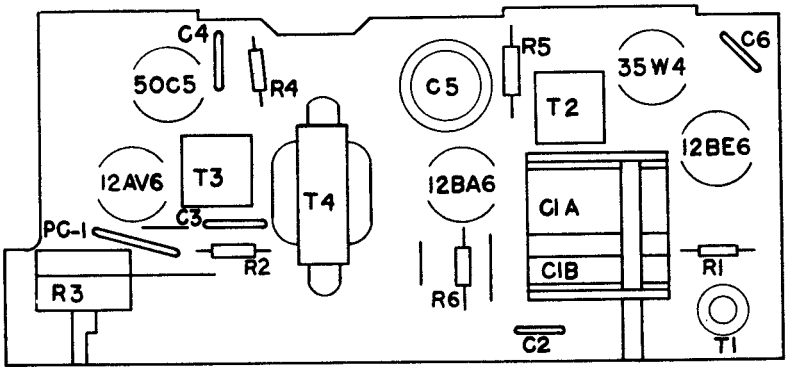


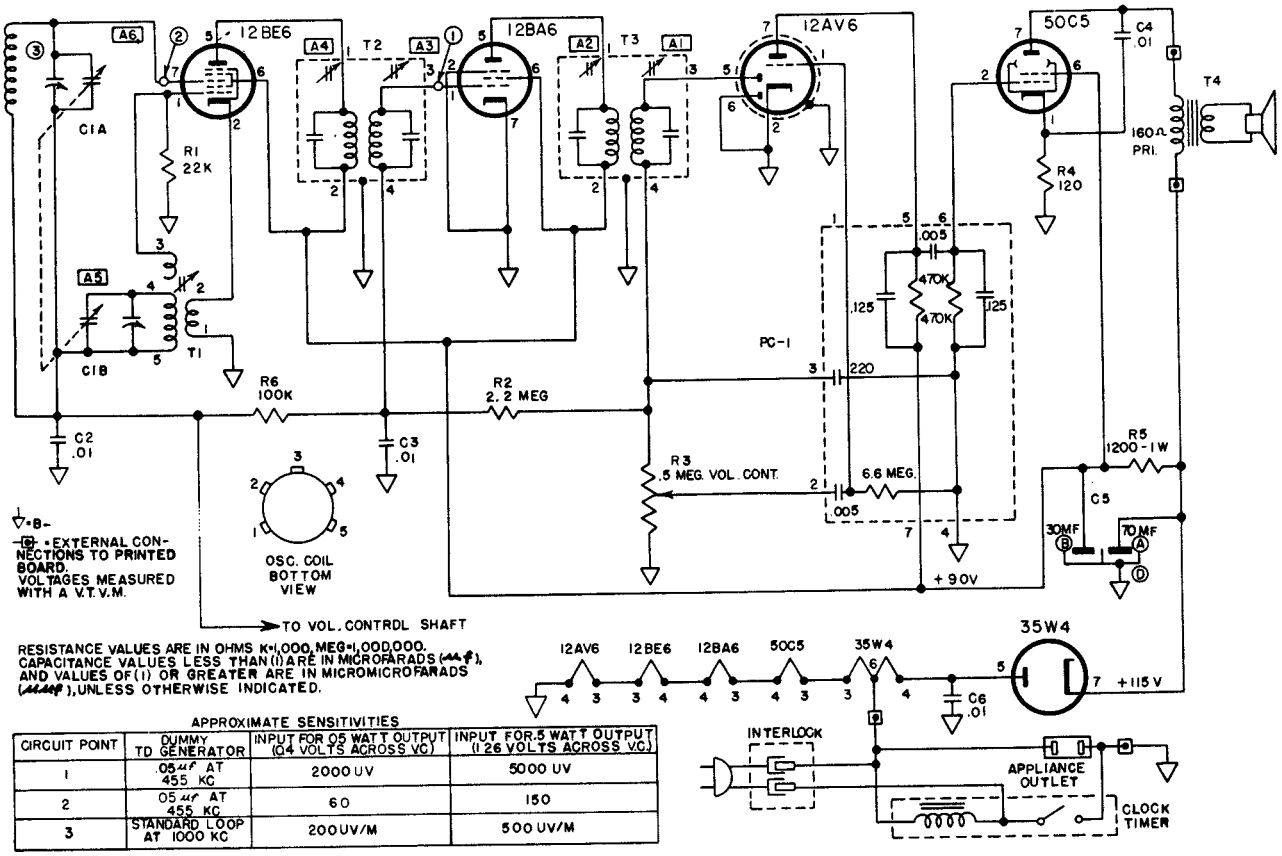


APPROXIMATE SENSITIVITIES

| CIRCUIT POINT | DUMMY TO GENERATOR | INPUT FOR .05 WATT OUTPUT (.04 VOLTS ACROSS VC) | INPUT FOR .5 WATT OUTPUT (1.26 VOLTS ACROSS VC) |
|---|---|---|---|
| 1 | .05μf AT 455 KC | 2000 UV | 5000 UV |
| 2 | .05μf AT 455 KC | 60 | 150 |
| 3 | STANDARD LOOP AT 1000 KC | 200 UV/M | 500 UV/M |

ALIGNMENT PROCEDURE Output meter connection Across speaker voice coil
Output meter reading to indicate 500 milliwatts (standard output)... 1.26 volts
Connection of generator ground lead ..... Floating ground
Generator modulation ..... 30% 400 cycles

| Position of Variable | Frequency of Generator | Dummy Antenna | Generator Output Connection | Trimmers Adjusted in Order Shown for Maximum Output | Function of Trimmer |
|---|---|---|---|---|---|
| Open | 455 Kc | .05 μ fd | Pin 7 12BE6 | A1, A2, A3, A4 | I.F. |
| Open | 1670 Kc | | * Test Loop | A5 | Oscillator |
| 1400 | 1400 Kc | | * Test Loop | A6 | Antenna |
| 1000 | 1000 Kc | | * Test Loop | Fan C1A Plates | |
| 600 | 600 Kc | | * Test Loop | Fan C1A Plates | |

* Standard Hazeltine Test Loop Model 1150 or 3 turns of wire about 6" in diameter placed about one foot from the set loop.

## ARVIN Industries

## Model 8584, Chassis 1.44600

| SIGNAL TEST POINT | TEST FREQUENCY | SERIES CAPACITOR TO GENERATOR | INPUT FOR .05 WATT OUTPUT (0.4 V ACROSS 3.2Ω) |
|---|---|---|---|
| ① | 455 KC | .05 µf | 5000 µV |
| ② | 455 KC | .05 µf | 200 µV |
| ③ | 455 KC | .05 µf | 8 µV |
| ④ | 1000 KC | STANDARD LOOP | 250 µV/M |

### ALIGNMENT PROCEDURE

Output meter reading to indicate 50 milliwatts ..... 0.4V
Output meter connection ..... Across speaker voice coil
Connection of generator ground lead ..... Common Ground
Generator Modulation ..... 30% 400 Cycles
Position of volume control ..... Fully Clockwise

| Position of Variable | Generator Frequency | Dummy Antenna | Generator Connections | Trimmers Adj. in order shown for Max. Output | Function of Trimmer |
|---|---|---|---|---|---|
| Open | 455 Kc | .05 µf | C1A | A1 (Top of T3) | I.F. |
| | | | | A2 (Top of T2) | I.F. |
| | | | | A3 (Top of T1) | I.F. |
| Open | 1670 Kc | | *Test Loop | A4 | Oscillator |
| 1400 Kc | 1400 Kc | | *Test Loop | A6 | Antenna |
| 600 Kc | 600 Kc | | *Test Loop | Check Point | |

*Standard Hazeltine Test Loop Model 1150 or 3 turns of wire about 6" in diameter placed about one foot from the set loop.

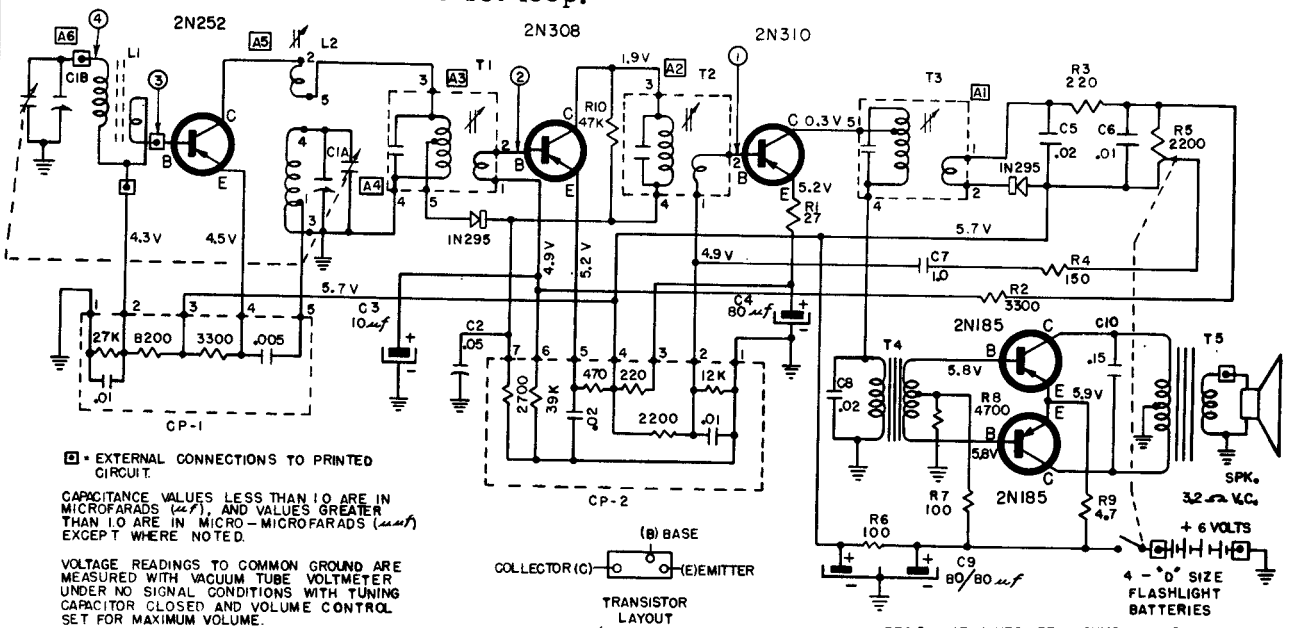


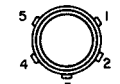

OSCILLATOR COIL (BOTTOM VIEW)

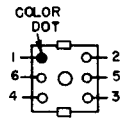


I.F TRANSFORMER (BOTTOM VIEW)

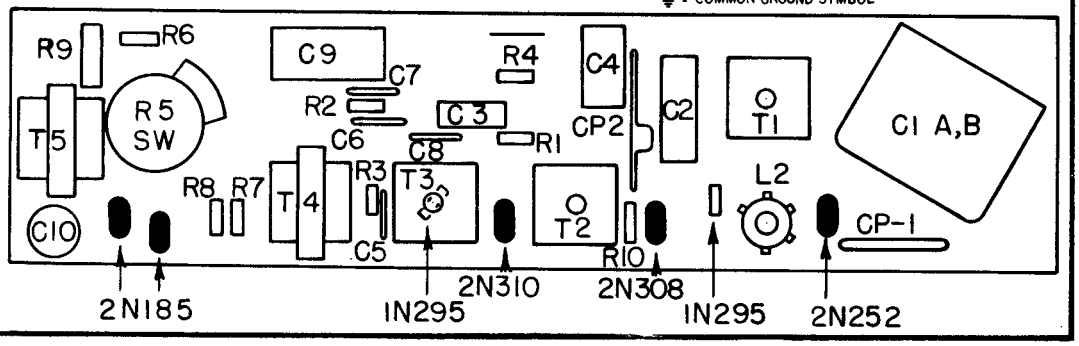

## ARVIN Industries, Models 8581, 8583, Chassis 1.43700, 1.43900

### ALIGNMENT PROCEDURE

Output meter reading to indicate .05 watt across voice coil ..... 0.4V
Generator ground lead connected ..... floating ground
Generator modulation ..... 30% 400 cycles
Position of Volume Control ..... fully on

| Position of Variable | Generator Frequency | Dummy Antenna | Generator Connections | Adjust Trimmers (In order shown) | Function of Trimmer |
|---|---|---|---|---|---|
| Open | 455 Kc | .05 µf | Mixer Grid | A1, A2, A3, | I.F. |
| Open | 1670 Kc | | Test Loop | A4 | Oscillator |
| 1400 Kc | 1400 Kc | | Test Loop | A5 | Antenna |
| 600 Kc | 600 Kc | | Test Loop | Check Point | |

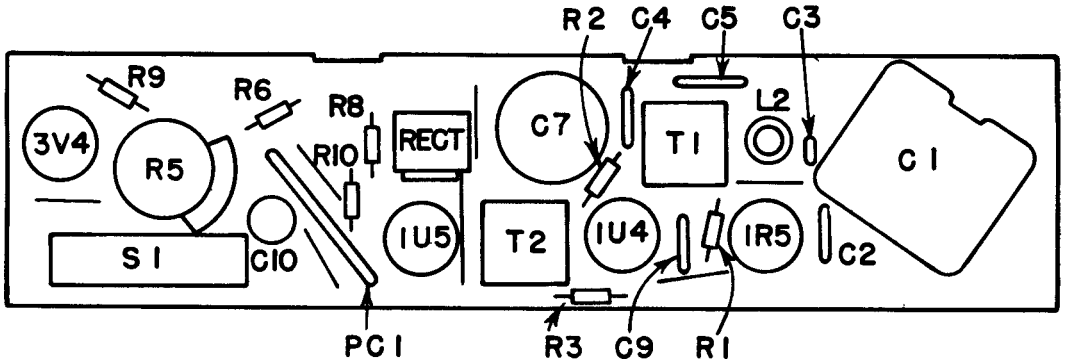


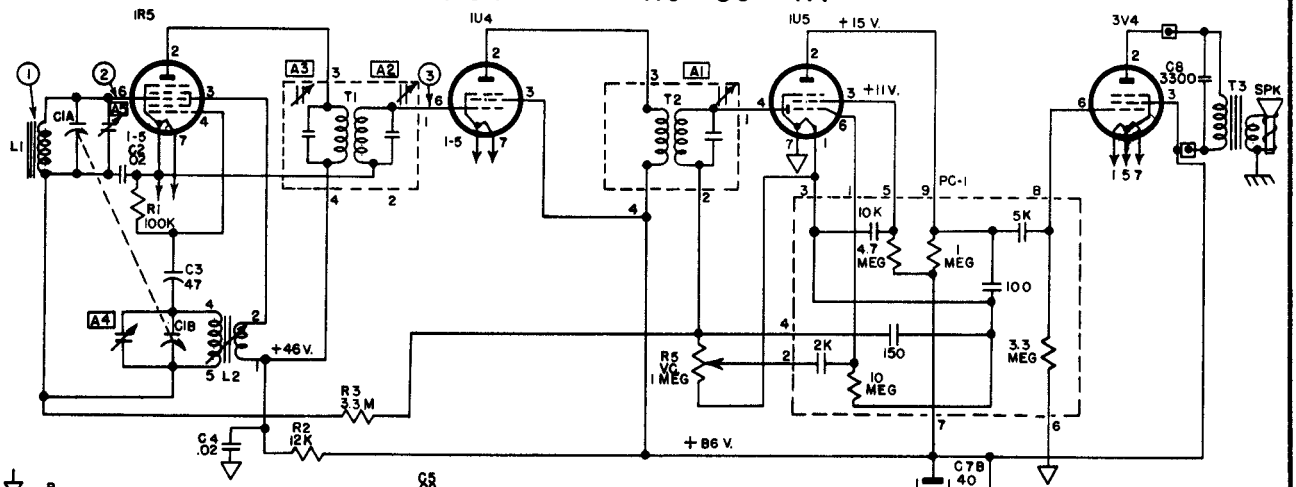


—B—
—CHASSIS OR CABINET
S.1—SHOWN IN A C POSITION.
—EXTERNAL CONNECTIONS TO BOARD.
VOLTAGE READINGS SHOWN AT SOCKET PRONGS ARE TO B— AND ARE TAKEN WITH NO SIGNAL, LINE VOLTAGE AT 117 V. AC, MEASURED WITH VACUUM TUBE VOLTMETER.
RESISTANCE VALUES ARE IN OHMS K=1,000, MEG=1,000,000.
CAPACITANCE VALUES LESS THAN (1) ARE IN MICROFARADS (µf), AND VALUES OF (1) OR GREATER ARE IN MICROMICROFARADS (µµf), UNLESS OTHERWISE INDICATED.

| CIRCUIT POINT | DUMMY TO GENERATOR | INPUT FOR .05 WATT OUTPUT (0.4 VOLTS ACROSS V.C.) |
|---|---|---|
| 1 | .05µf AT 455 KC | 2000 UV |
| 2 | .05µf AT 455 KC | 60 |
| 3 | STANDARD LOOP AT 1000 KC | 200 UV/M |

# DELCO

## BUICK MODEL 981968

(Additional material on the next page adjacent at right)

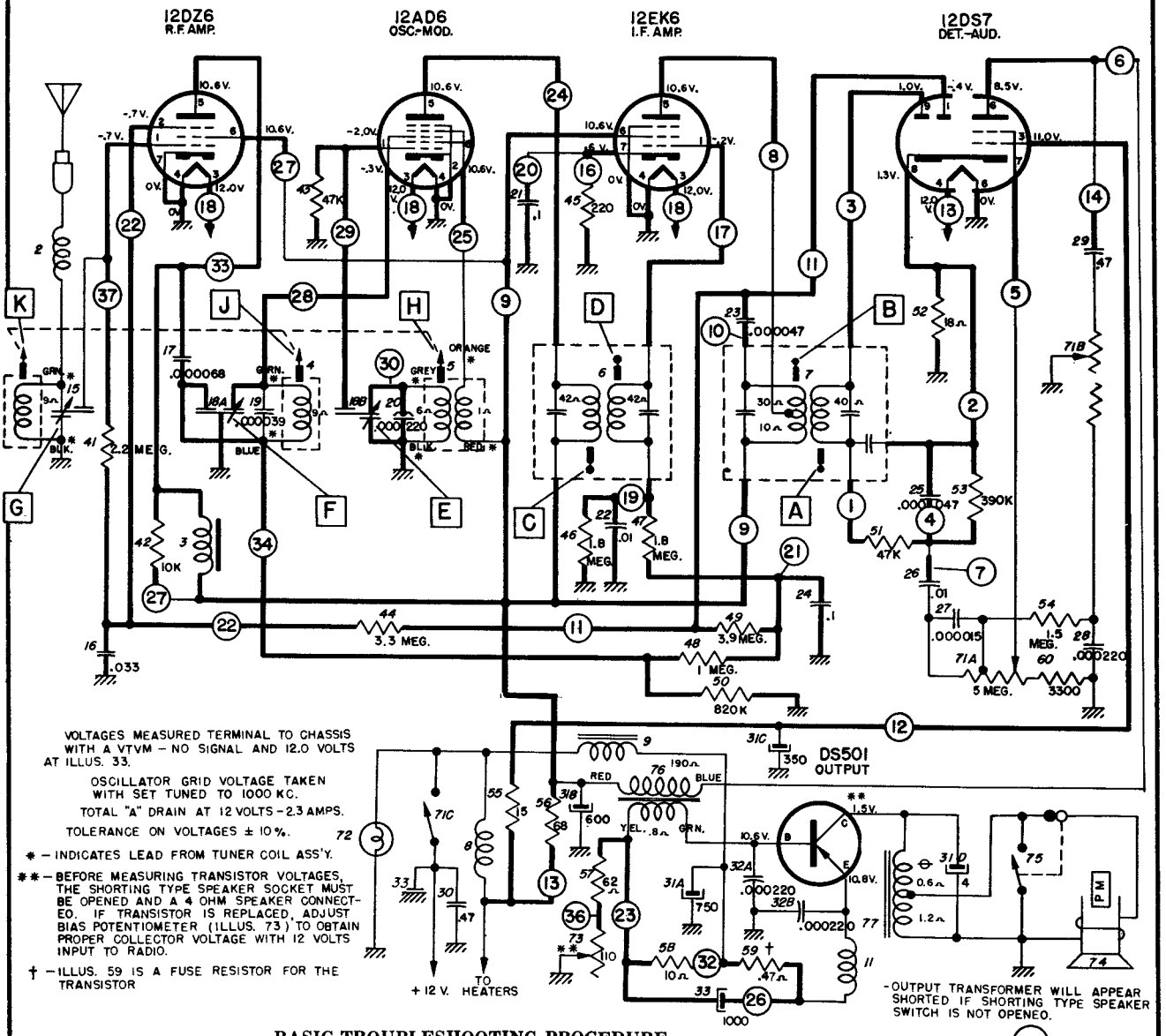


### BASIC TROUBLESHOOTING PROCEDURE

1. Put ear next to speaker and turn radio on. If slight "thump" is heard as this is done, trouble is in tube stages—try new tubes.

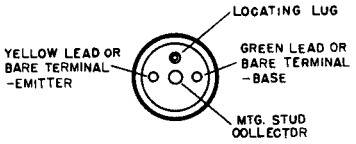


**DS 501—Transistor Terminals**

2. If no "thump" at all is heard, measure voltage from transistor case to radio chassis. If 1-2 volts is present, transistor is operating normally and trouble is either in speaker, speaker interlock socket, or one of the tube circuits.

3. If no voltage is present in step 2, check transistor circuit and particularly the transistor fuse resistor, Illustration No. 59. This resistor is mounted between points 32 and 26 on circuit board and should measure less than 1 ohm.

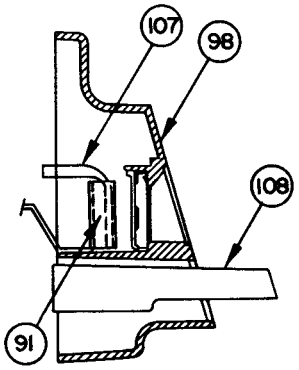


**ESCUTCHEON CROSS SECTION**

DELCO

BUICK 981968
(Continued from preceding page)

PARTS LAYOUT—CHASSIS VIEW

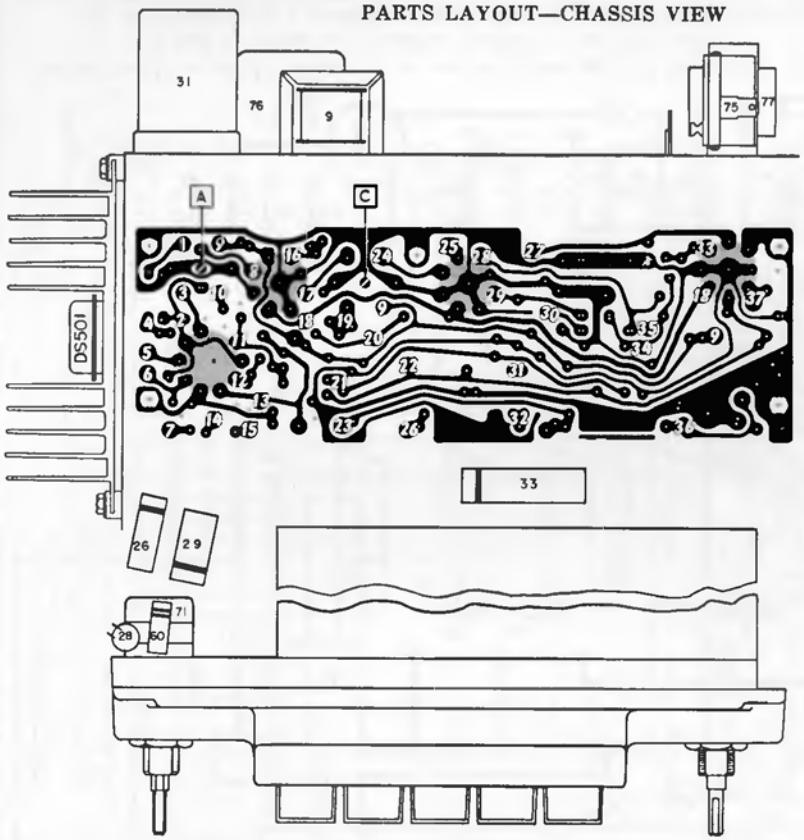


PART LAYOUT—TUBE VIEW

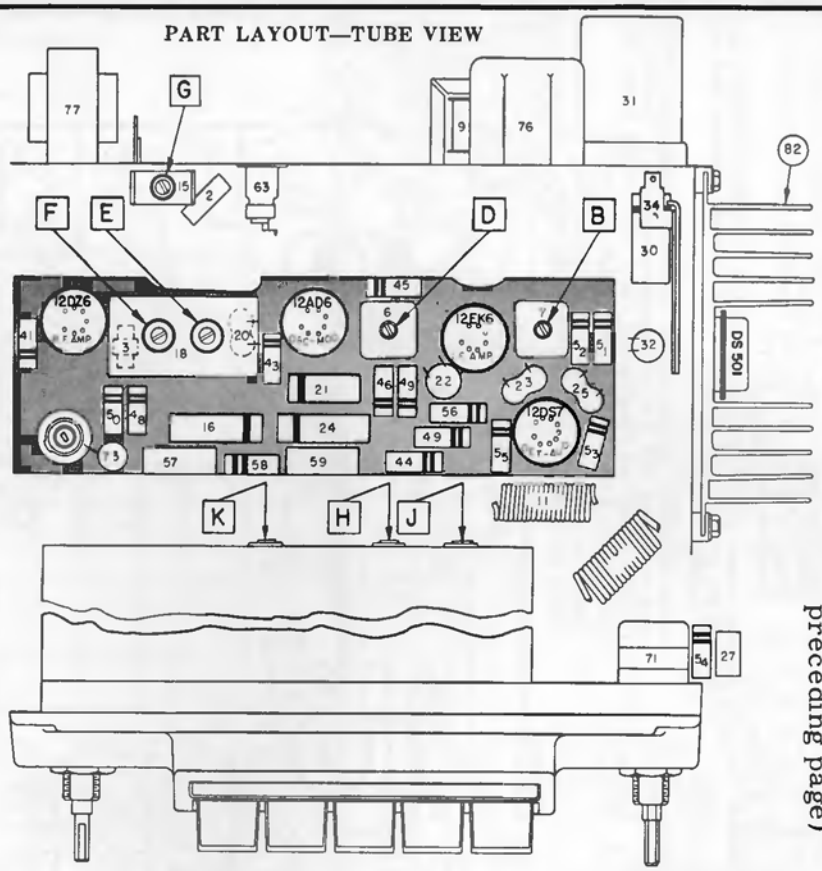


WHITE NUMBERS ON PRINTED CIRCUIT BOARD DRAWING CORRESPOND TO NUMBERS ENCIRCLED ON SCHEMATIC.

## ALIGNMENT PROCEDURE

Output Meter Connections.....Across Voice Coil
Generator Return.....To Receiver Chassis
Dummy Antenna.....In Series With Generator
Volume Control Position.....Maximum Volume
Tone Control Position.....Treble
Generator Output..Minimum for Readable Indication

| STEP | SERIES CONDENSER OR DUMMY ANTENNA | CONNECT SIGNAL GENERATOR TO | SIGNAL GENERATOR FREQUENCY | TUNE RECEIVER TO | ADJUST IN SEQUENCE FOR MAX. OUTPUT |
|---|---|---|---|---|---|
| 1 | 0.1 Mfd. | 12DA6 Grid (Pin #7) | 262 KC | High Frequency Stop | A, B, D, C |
| 2 | .000082 Mfd. | Antenna Connector | 1615 KC | High Frequency Stop | *E, F, G |
| 3 | .000082 Mfd. | Antenna Connector | 600 KC | Signal Generator Signal | J, K |
| 4 | .000082 Mfd. | Antenna Connector | 1615 KC | High Frequency Stop | F, G |
| 5 | .000082 Mfd. | Antenna Connector | 900 KC | Signal Generator Signal | L** |

*Before making this adjustment check mechanical setting of oscillator core "H." The rear of the core should be 1⅝" from the mounting end of the coil form. (This measurement is readily made by inserting a suitable plug in the mounting end of the coil form.) Core adjustment should be made with a non-metallic screwdriver.

**L is the pointer adjustment screw which is on the connecting link, between the pointer assembly and the parallel guide bar. Is should be adjusted so that the dial pointer corresponds with the 900 KC mark on the dial.

# DELCO

BUICK 981970
OLDSMOBILE 989172
PONTIAC 988978

Continued on the next page, adjacent at right.

## SCHEMATIC DATA

Voltages measured terminal to chassis with a VTVM—no signal. The portable unit voltages are taken with a battery voltage of 5.2 volts. Rack unit voltages taken with 12 volts at Illus. 37.

Total "A" Drain in Car 1.3 amps.
Total "A" Drain of Portable 6 ma.
Tolerance on Voltage ±10%.

Resistances are ±20%. Ohmmeter reading in transistor circuits are affected by meter battery polarity. Check in both directions and use highest reading.

*—Before measuring transistor voltages, the shorting type speaker socket must be opened and a 4 ohm speaker connected. If transistor is replaced, adjust bias potentiometer (Illus. 84) to obtain proper collector voltage with 12 volts input to radio.

**—Illus. 77 is a fuse resistor for the DS 501 transistor. An open fuse resistor will cause 0 volts at transistor collector.

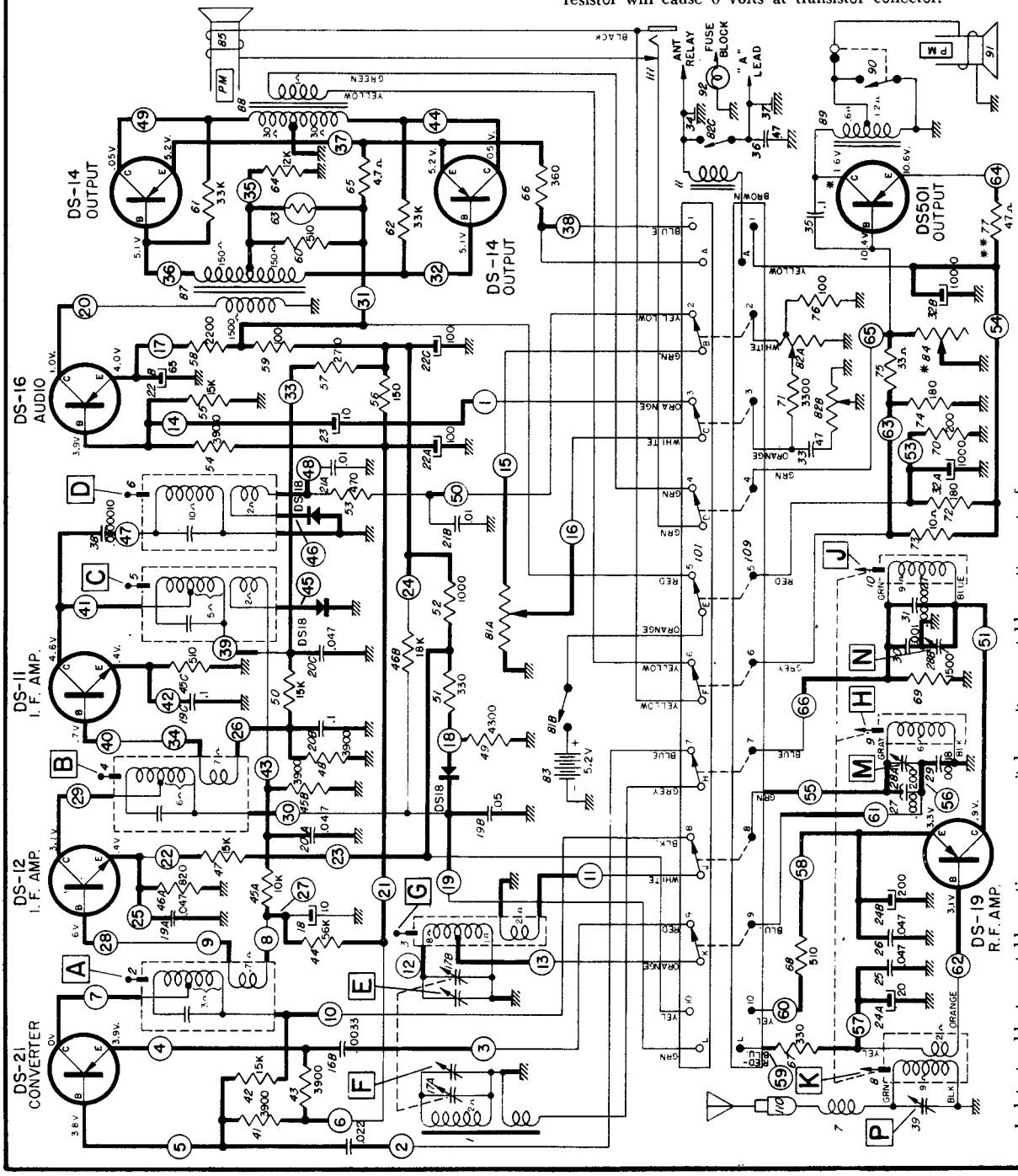


Isolate trouble to portable section or car unit by pulling portable section out of car.

A. If it fails to operate as a portable, trouble is in portable unit.
B. If it operates as a portable but not in the car, trouble is in car unit or car antenna.
C. If it operates in car but not as a portable, check batteries, portable antenna and interconnecting socket.

DELCO
BUICK 981970
OLDSMOBILE 989172
PONTIAC 988978
(Continued)

NOTE: WHITE NUMBERS ON PRINTED CIRCUIT DRAWINGS CORRESPOND TO ENCIRCLED NUMBERS ON SCHEMATIC DIAGRAM.

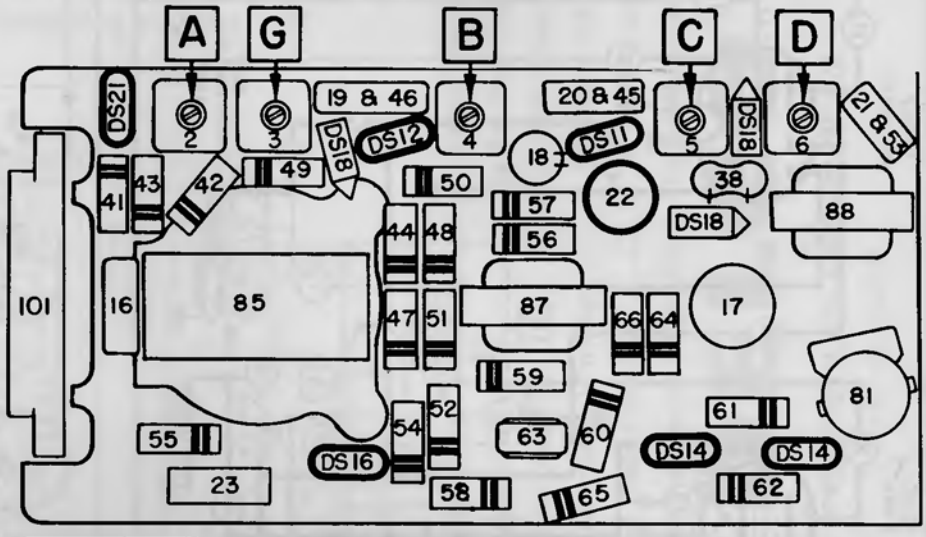


PUSHBUTTON UNIT

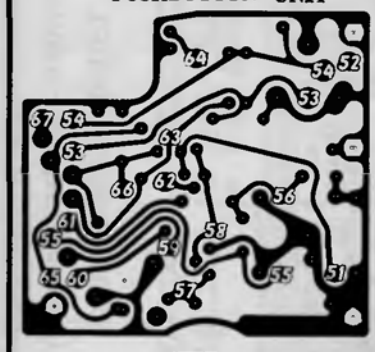

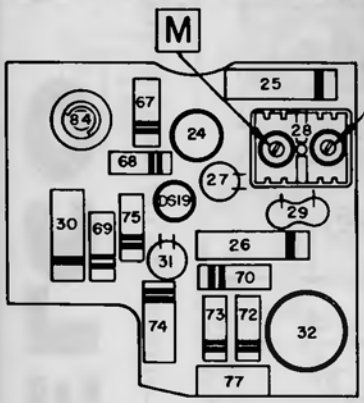


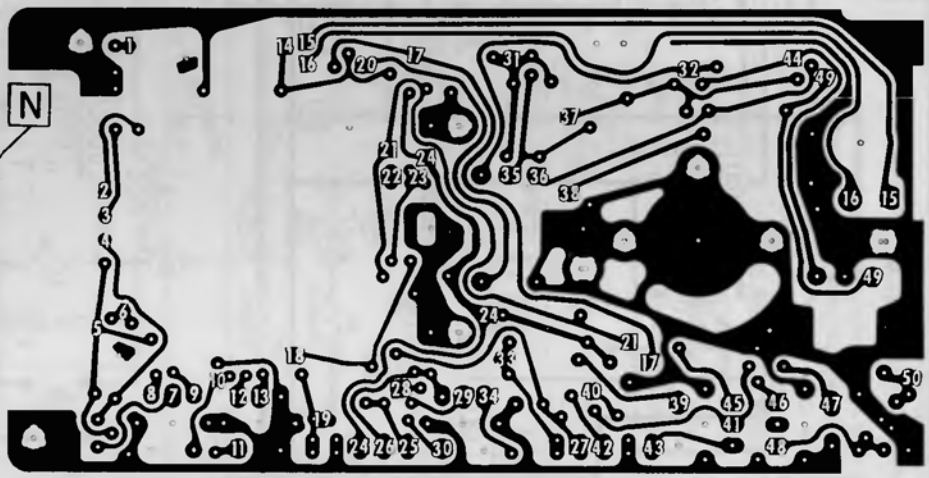

## ALIGNMENT

**Set radio volume control to maximum. Read output at speaker; keep below .5 volt.**

| Step | Method Of Connecting Generator | Connect Generator To | Signal Frequency | Tune Receiver To | Adjust In Sequence For Max. Output |
|---|---|---|---|---|---|
| 1 | Thru .1 mfd. Cap. | Converter Base (Island 5) | 465 KC | High freq. stop | A, B, C, D |
| 2 | Pick up loop | By induction to antenna | 1680 KC | High freq. stop | E Trimmer on variable (nearest batteries); F Trimmer on variable (nearest vol. control) |
| 3 | Do not use | Align on noise (Lights, razor, etc.) | Noise | Near 600 KC | G |
| 4 | Pick up loop | By induction to antenna | 1400 KC | Signal Gen. freq. | F |
| | **If it is necessary to align pushbutton tuner, connect portable to it and follow the steps below.** | | | | |
| 5 | .000068 mfd., Cap. | Antenna connector | 1615 KC | High freq. stop | *M, N, P |
| 6 | .000068 mfd., Cap. | Antenna connector | 600 KC | Signal Gen. freq. | J, K |
| 7 | .000068 mfd., Cap. | Antenna connector | 1615 KC | Signal Gen. freq. | N, P |
| 8 | .000068 mfd., Cap. | Antenna connector | 1000 KC | Signal Gen. freq. | L** |

*Before making this adjustment, check mechanical setting of oscillator core "H," with radio tuned to high frequency limit. The rear of the core should be 1⅝" from the mounting end of the coil form. (This measurement is readily made by inserting a ruled plug in the rear of the coil form.)

**L is the pointer adjustment screw which is on the connecting link, between the pointer assembly and the parallel guide bar. It should be adjusted so that the dial pointer corresponds with the 1100 KC mark on the dial.

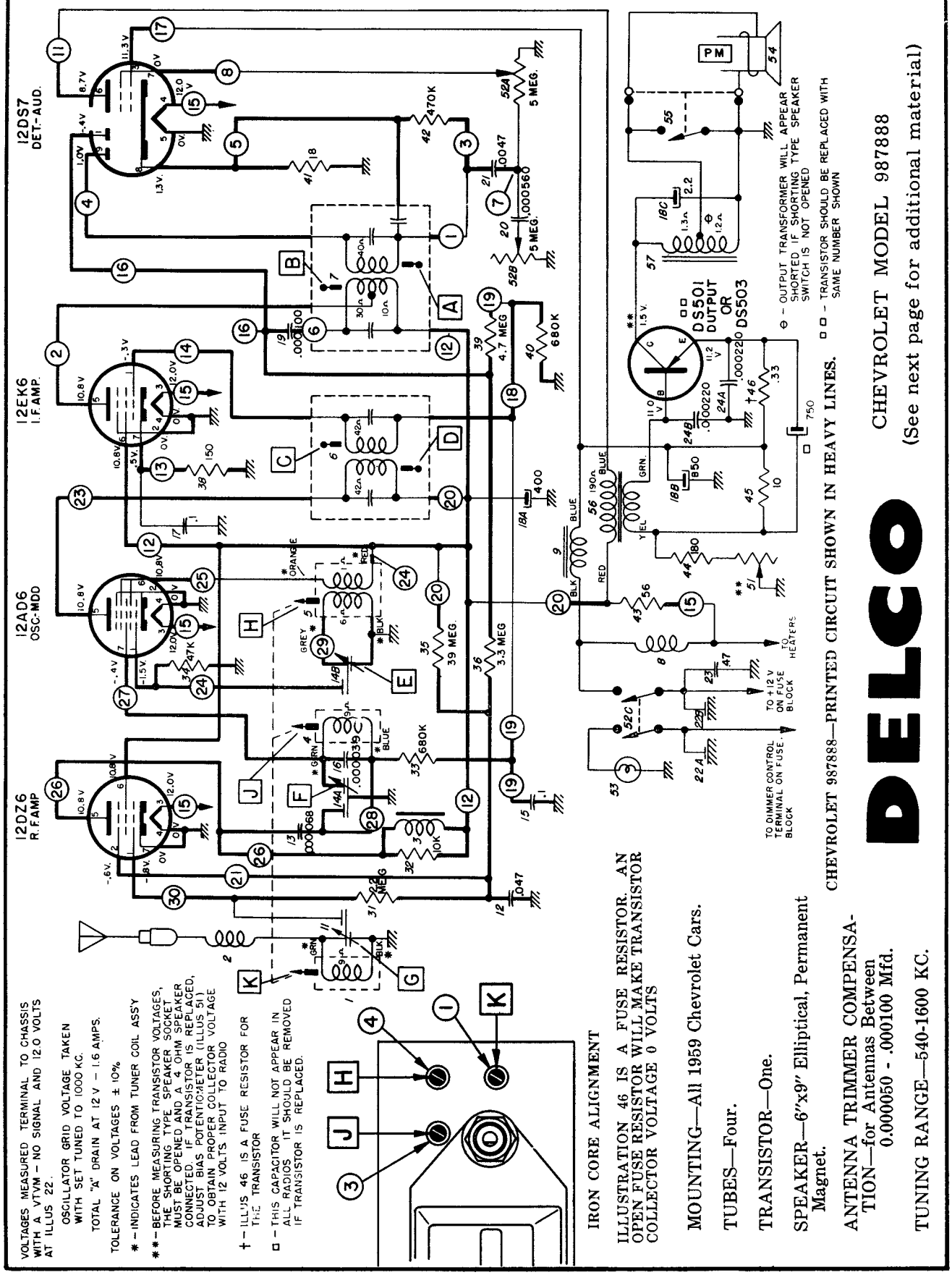
12DS7
DET-AUD.
12EK6
I.F. AMP.
12AD6
OSC-MDD
12DZ6
R.F. AMP
DS501
OUTPUT
OR
DS503
PM
TO HEATERS
TO +12 V ON FUSE BLOCK
TO DIMMER CONTROL TERMINAL ON FUSE.
⊖ - OUTPUT TRANSFORMER WILL APPEAR SHORTED IF SHORTING TYPE SPEAKER SWITCH IS NOT OPENED
□□ - TRANSISTOR SHOULD BE REPLACED WITH SAME NUMBER SHOWN
VOLTAGES MEASURED TERMINAL TO CHASSIS WITH A VTVM - NO SIGNAL AND 12.0 VOLTS AT ILLUS 22.
OSCILLATOR GRID VOLTAGE TAKEN WITH SET TUNED TO 1000 KC.
TOTAL "A" DRAIN AT 12 V - 1.6 AMPS.
TOLERANCE ON VOLTAGES ± 10%
* - INDICATES LEAD FROM TUNER COIL ASS'Y
** - BEFORE MEASURING TRANSISTOR VOLTAGES, THE SHORTING TYPE SPEAKER SOCKET MUST BE OPENED AND A 4 OHM SPEAKER CONNECTED. IF TRANSISTOR IS REPLACED, ADJUST BIAS POTENTIOMETER (ILLUS 51) TO OBTAIN PROPER COLLECTOR VOLTAGE WITH 12 VOLTS INPUT TO RADIO
† - ILLUS 46 IS A FUSE RESISTOR FOR THE TRANSISTOR
□ - THIS CAPACITOR WILL NOT APPEAR IN ALL RADIOS. IT SHOULD BE REMOVED IF TRANSISTOR IS REPLACED.
IRON CORE ALIGNMENT
ILLUSTRATION 46 IS A FUSE RESISTOR. AN OPEN FUSE RESISTOR WILL MAKE TRANSISTOR COLLECTOR VOLTAGE 0 VOLTS
MOUNTING—All 1959 Chevrolet Cars.
TUBES—Four.
TRANSISTOR—One.
SPEAKER—6"x9" Elliptical, Permanent Magnet.
ANTENNA TRIMMER COMPENSATION—for Antennas Between 0.000050 - .000100 Mfd.
TUNING RANGE—540-1600 KC.
CHEVROLET 987888—PRINTED CIRCUIT SHOWN IN HEAVY LINES.
DELCO
CHEVROLET MODEL 987888
(See next page for additional material)

## DELCO CHEVROLET MODEL 987888
(Continued from preceding page at left)

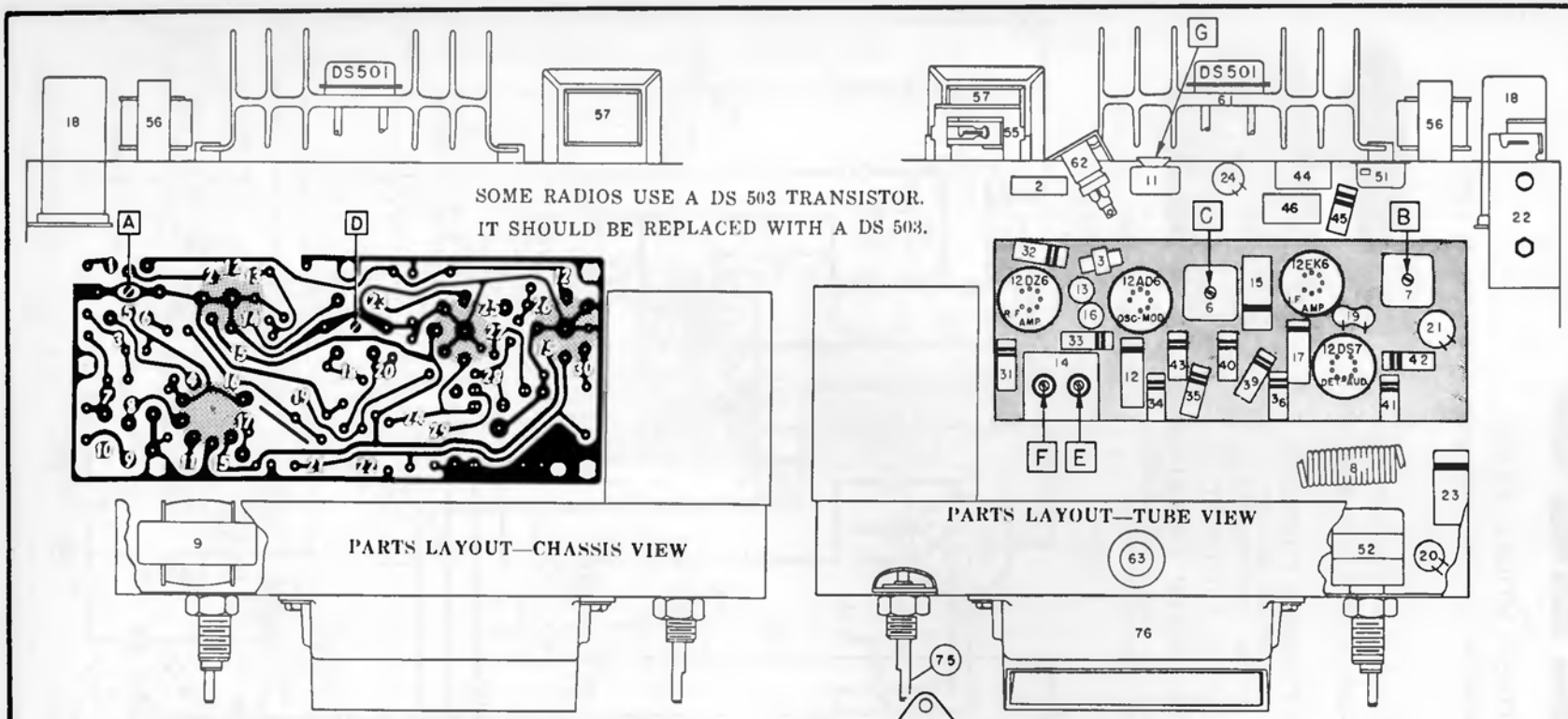


SOME RADIOS USE A DS 503 TRANSISTOR. IT SHOULD BE REPLACED WITH A DS 503.

PARTS LAYOUT—CHASSIS VIEW

PARTS LAYOUT—TUBE VIEW

NUMBERS ON PRINTED CIRCUIT BOARD CORRESPOND WITH NUMBERS IN CIRCLES ON SCHEMATIC DIAGRAM.

CONNECT A. C. VOLTMETER ACROSS SPEAKER VOICE COIL DURING ALIGNMENT.

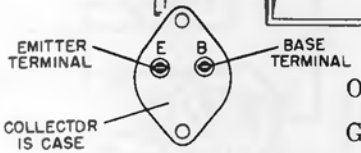


DS 503—Transistor Terminals

Output Meter Connections.....Across Voice Coil
Generator Return.....To Receiver Chassis
Dummy Antenna.....In Series With Generator
Volume Control Position.....Maximum Volume
Tone Control Position.....Treble Position
Generator Output....Minimum for Readable Indication

### ALIGNMENT PROCEDURE

| STEPS | SERIES CAPACITOR OR DUMMY ANTENNA | CONNECT SIGNAL GENERATOR TO | SIGNAL GENERATOR FREQUENCY | TUNE RECEIVER TO | ADJUST IN SEQUENCE FOR MAX. OUTPUT |
|---|---|---|---|---|---|
| 1 | 0.1 Mfd. | 12AD6 Grid (Pin #7) | 262 KC | High Frequency Stop | A, B, C, D, |
| 2 | 0.000082 Mfd. | Antenna Connector | 1615 KC | High Frequency Stop | *E, F, G, |
| 3 | 0.000082 Mfd. | Antenna Connector | 600 KC | Signal Generator Signal | J, K |
| 4 | 0.000082 Mfd. | Antenna Connector | 1615 KC | High Frequency Stop | F, G |

*Before making this adjustment check mechanical setting of oscillator core "H." The rear of the core should be 1⅝" from the mounting end of the coil form. (This measurement is readily made by inserting a suitable plug in the mounting end of the coil form.) Core adjustment should be made with a non-metallic screw driver.

With the radio installed and the car antenna plugged in adjust the antenna trimmer "G" for maximum volume with the radio tuned to a weak station between 600 and 1000 KC (see sticker on case.)

**DELCO**

CHEVROLET MODEL 987888
(Continued)

# DELCO

## CHEVROLET MODEL 987891

(For additional material see the next page adjacent at right)

VOLTAGES MEASURED TERMINAL TO CHASSIS WITH A VTVM - NO SIGNAL AND 12.0 VOLTS AT ILLUS. 29

OSCILLATOR GRID VOLTAGE TAKEN WITH SET TUNED TO 1000 KC.

TOTAL "A" DRAIN AT 12 V - 2.2 AMPS.

TOLERANCE ON VOLTAGES ± 10%

* — INDICATES LEAD FROM TUNER COIL ASS'Y

** — BEFORE MEASURING TRANSISTOR VOLTAGES, THE SHORTING TYPE SPEAKER SOCKET MUST BE OPENED AND A 4 OHM SPEAKER CONNECTED. IF TRANSISTOR IS REPLACED, ADJUST BIAS POTENTIOMETER (ILLUS. 73) TO OBTAIN PROPER COLLECTOR VOLTAGE WITH 12 VOLTS INPUT TO RADIO

† — ILLUS. 60 IS A FUSE RESISTOR FOR THE TRANSISTOR

### GENERAL

MOUNTING—All 1959 Chevrolet Cars.

TUNING—Manual and 5 P. B. Mechanical.

ANTENNA TRIMMER COMPENSATION—for Antennas Between 0.000050 - .000100 Mfd.

TUNING RANGE—540-1600 KC.

### PUSH BUTTON SETUP PROCEDURE

Pull Push Button out. Tune in desired station manually. Push button all the way in.

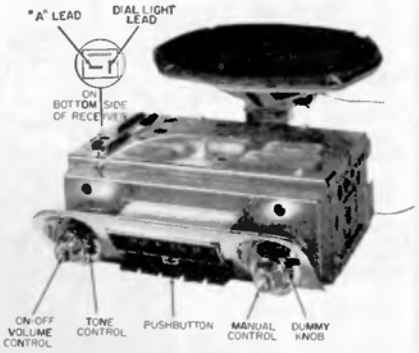


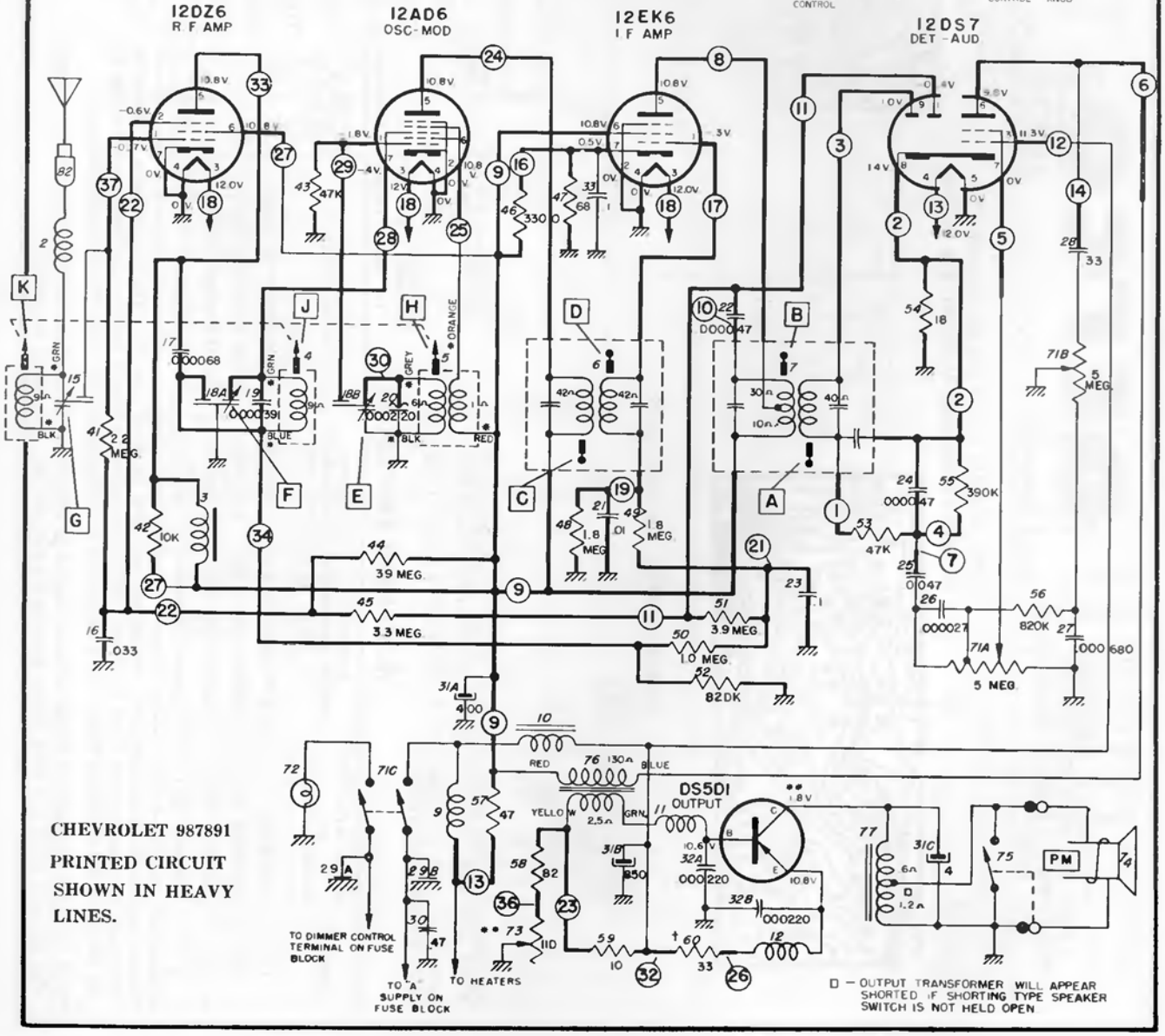


CHEVROLET 987891 PRINTED CIRCUIT SHOWN IN HEAVY LINES.

D — OUTPUT TRANSFORMER WILL APPEAR SHORTED IF SHORTING TYPE SPEAKER SWITCH IS NOT HELD OPEN

DELCO

CHEVROLET MODEL 987891
(Continued from preceding page)

PARTS LAYOUT—CHASSIS VIEW

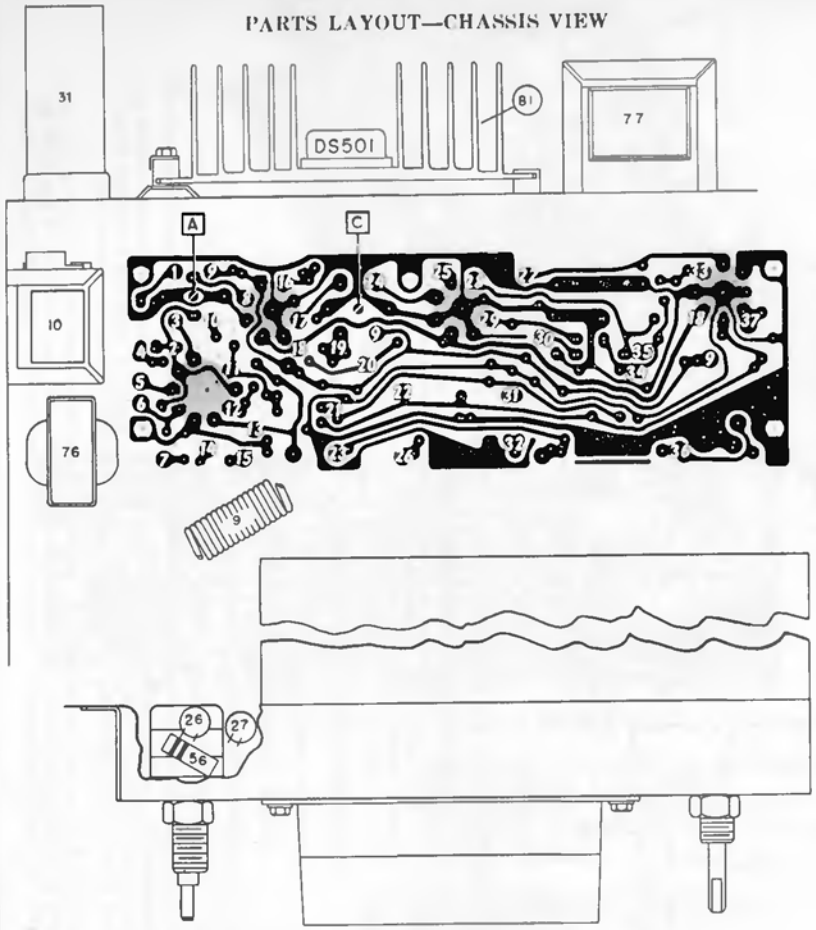


PARTS LAYOUT—TUBE VIEW

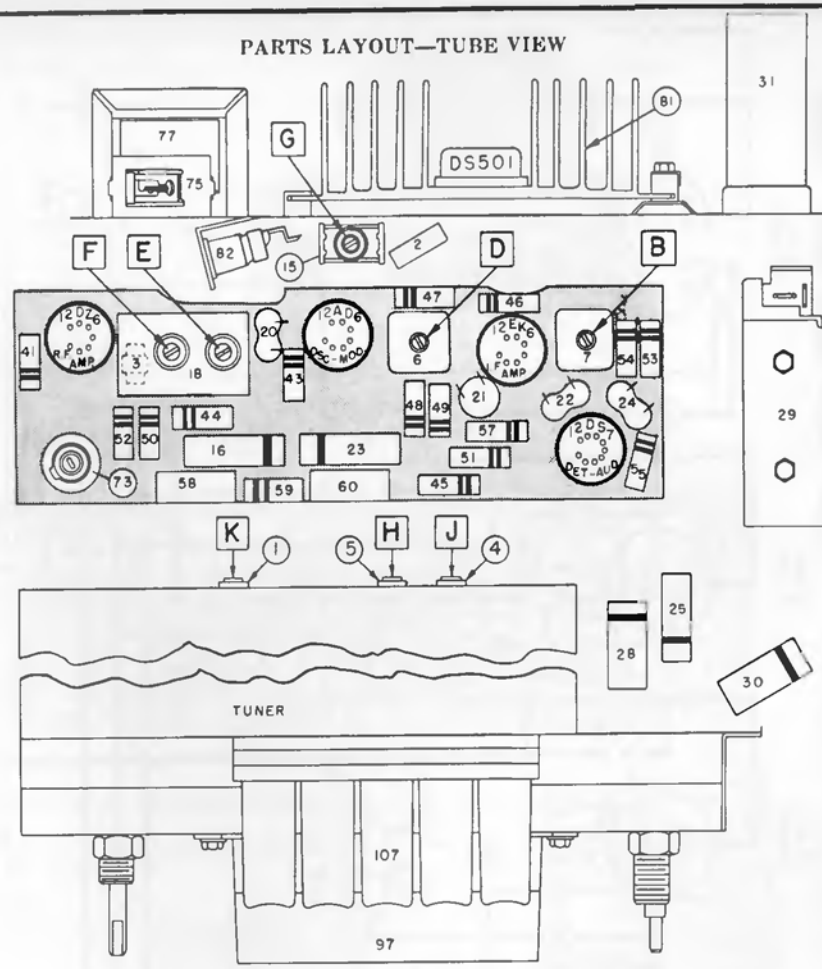


NOTE: ILLUS. 60 IS FUSE RESISTOR. OPEN FUSE RESISTOR MAKES TRANSISTOR COLLECTOR VOLTAGE 0 VOLTS.

CONNECT A. C. VOLTMETER ACROSS SPEAKER VOICE COIL DURING ALIGNMENT.

NUMBERS ON PRINTED CIRCUIT BOARD CORRESPOND WITH NUMBERS IN CIRCLES ON SCHEMATIC DIAGRAM.

ILLUS. 17, 19, AND 42 ARE LOCATED UNDER SHIELD OF DUAL TRIMMER ILLUS. 18.

Follow alignment procedure shown for Buick Model 981968, but use the above drawings for location of trimmers.

## BASIC TROUBLESHOOTING PROCEDURE

1. Put ear next to speaker and turn radio on; if slight "thump" is heard as this is done, trouble is not in transistor stage—try new tubes.

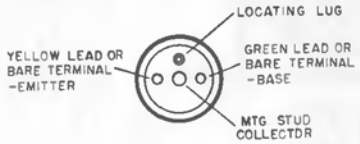


DS 501—Transistor Terminals

2. If no "thump" at all is heard, measure voltage from transistor case to radio chassis. If 1-2 volts is present, transistor is operating normally and trouble is either in speaker or one of the tube circuits.

3. If no voltage is present in step 2, check transistor circuits and particularly the transistor fuse resistor, Illustration No. 60. This resistor is mounted between points 32 and 26 on circuit board

# DELCO

## PONTIAC MODEL 988976

(Additional material on next page at right)

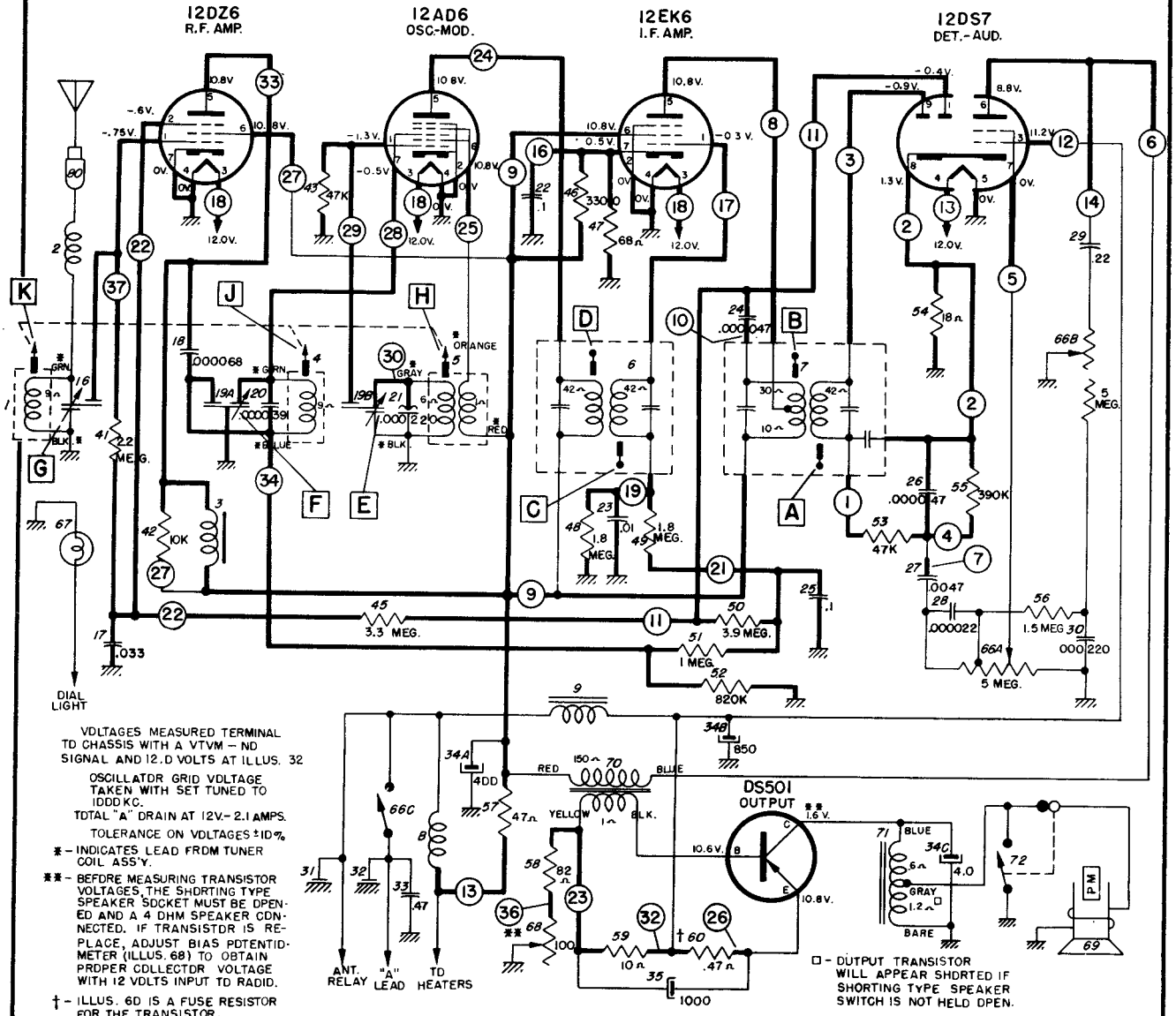


PONTIAC 988976—PRINTED CIRCUIT SHOWN IN HEAVY LINES.

## ALIGNMENT PROCEDURE:

| STEPS | SERIES CAPACITOR TO DUMMY ANTENNA | CONNECT SIGNAL GENERATOR TO | SIGNAL GENERATOR FREQUENCY | TUNE RECEIVER TO | ADJUST IN SEQUENCE FOR MAX. OUTPUT |
|---|---|---|---|---|---|
| 1 | 0.1 Mfd. | 12AD6 Grid (Pin #7) | 262 KC | High Frequency Stop | A, B, C, D |
| 2 | 0.000068 Mfd. | Antenna Connector | 1615 KC | High Frequency Stop | *E, F, G |
| 3 | 0.000068 Mfd. | Antenna Connector | 600 KC | Signal Generator Signal | J, K |
| 4 | 0.000068 Mfd. | Antenna Connector | 1615 KC | High Frequency Stop | F, G |
| 5 | 0.000068 Mfd. | Antenna Connector | 1100 KC | Signal Generator Signal | L** |

*Before making this adjustment check mechanical setting of oscillator core "H." The rear of the core should be 1⅝" from the mounting end of the coil form. (This measurement is readily made by inserting a suitable plug in the mounting end of the coil form.) Core adjustment should be made with a non-metallic screwdriver.

**L is the pointer adjustment which is on the connecting link, between the pointer assembly and core guide bar (See tuner Dwg.). It should be adjusted so that when looking directly at the dial the pointer is on the 1100 KC mark. This setting is to give the correct relationship between the pointer and the dial when the radio is installed in a car.

# DELCO

## PONTIAC MODEL 988976

(Continued from preceding page at left)

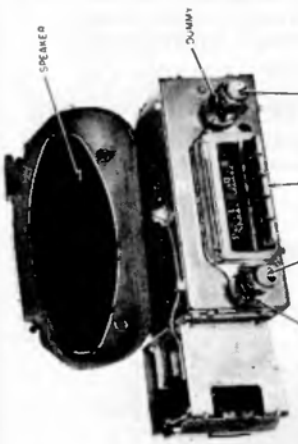


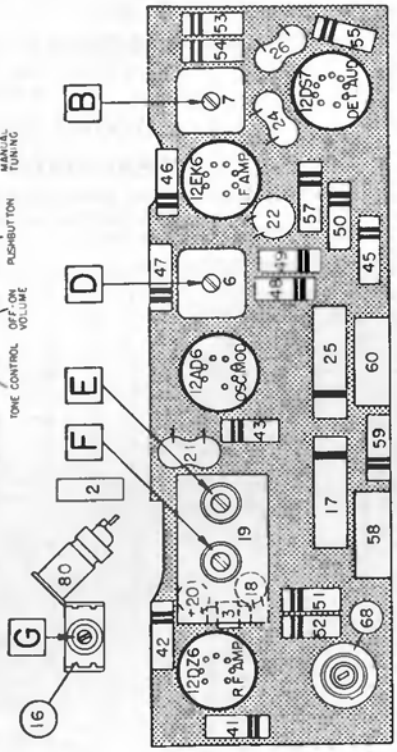


PARTS LAYOUT—TUBE VIEW

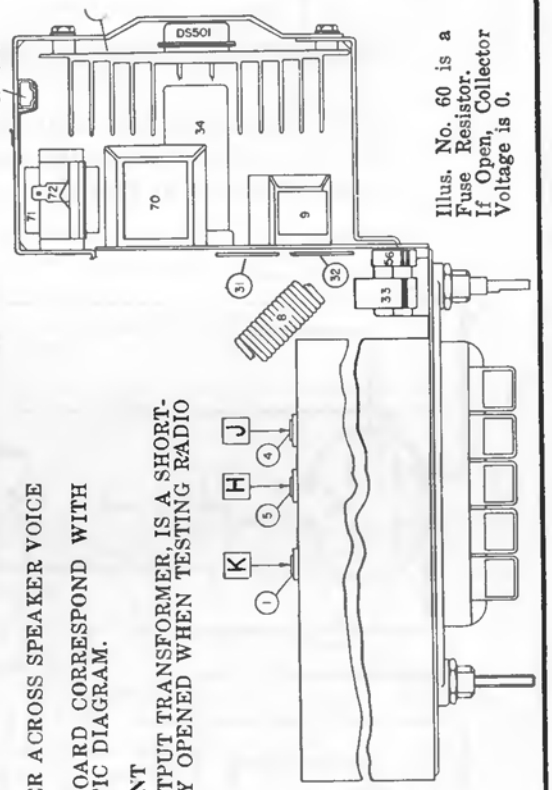


Illus. No. 60 is a Fuse Resistor. If Open, Collector Voltage is 0.

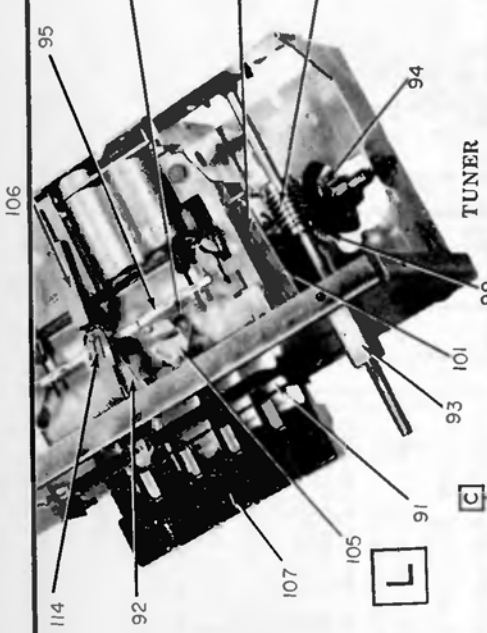


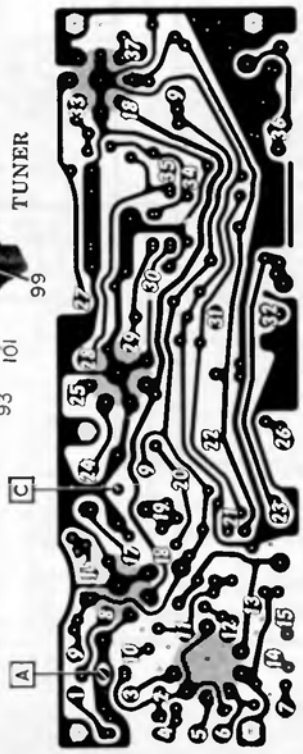


PARTS LAYOUT—CHASSIS VIEW

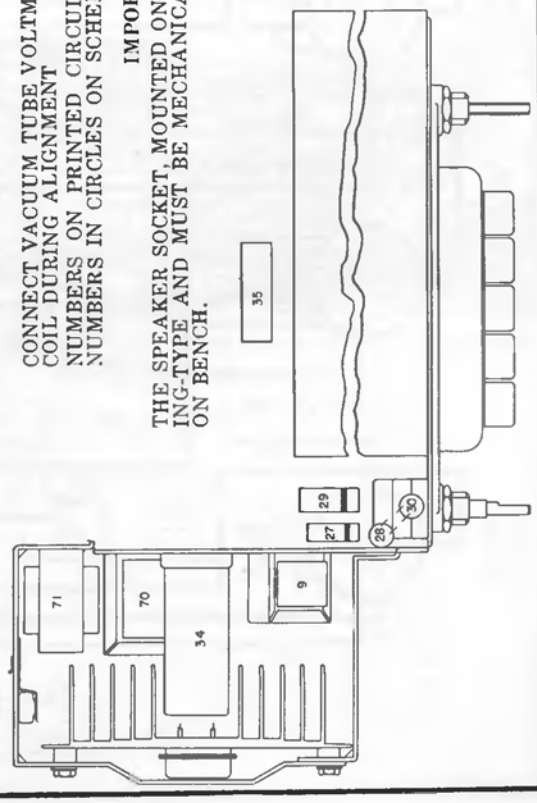

CONNECT VACUUM TUBE VOLTMETER ACROSS SPEAKER VOICE COIL DURING ALIGNMENT

NUMBERS ON PRINTED CIRCUIT BOARD CORRESPOND WITH NUMBERS IN CIRCLES ON SCHEMATIC DIAGRAM.

IMPORTANT

THE SPEAKER SOCKET, MOUNTED ON OUTPUT TRANSFORMER, IS A SHORTING-TYPE AND MUST BE MECHANICALLY OPENED WHEN TESTING RADIO ON BENCH.

# DELCO

OLDSMOBILE MODEL 989170

(For alignment and additional service information see next page adjacent at right)

## GENERAL

MOUNTING—All 1959 Oldsmobile Cars.

SPEAKER—6"x9" Elliptical, Permanent Magnet.

TUNING—Manual and 5 P. B. Mechanical.

ANTENNA TRIMMER COMPENSATION—for Antennas Between 0.000050 - 0.000090 Mfd.

TUNING RANGE—540-1600 KC.

## PUSHBUTTON SETUP PROCEDURE

Pull Pushbutton to the left and out. Tune in desired station manually. Push button all the way in.

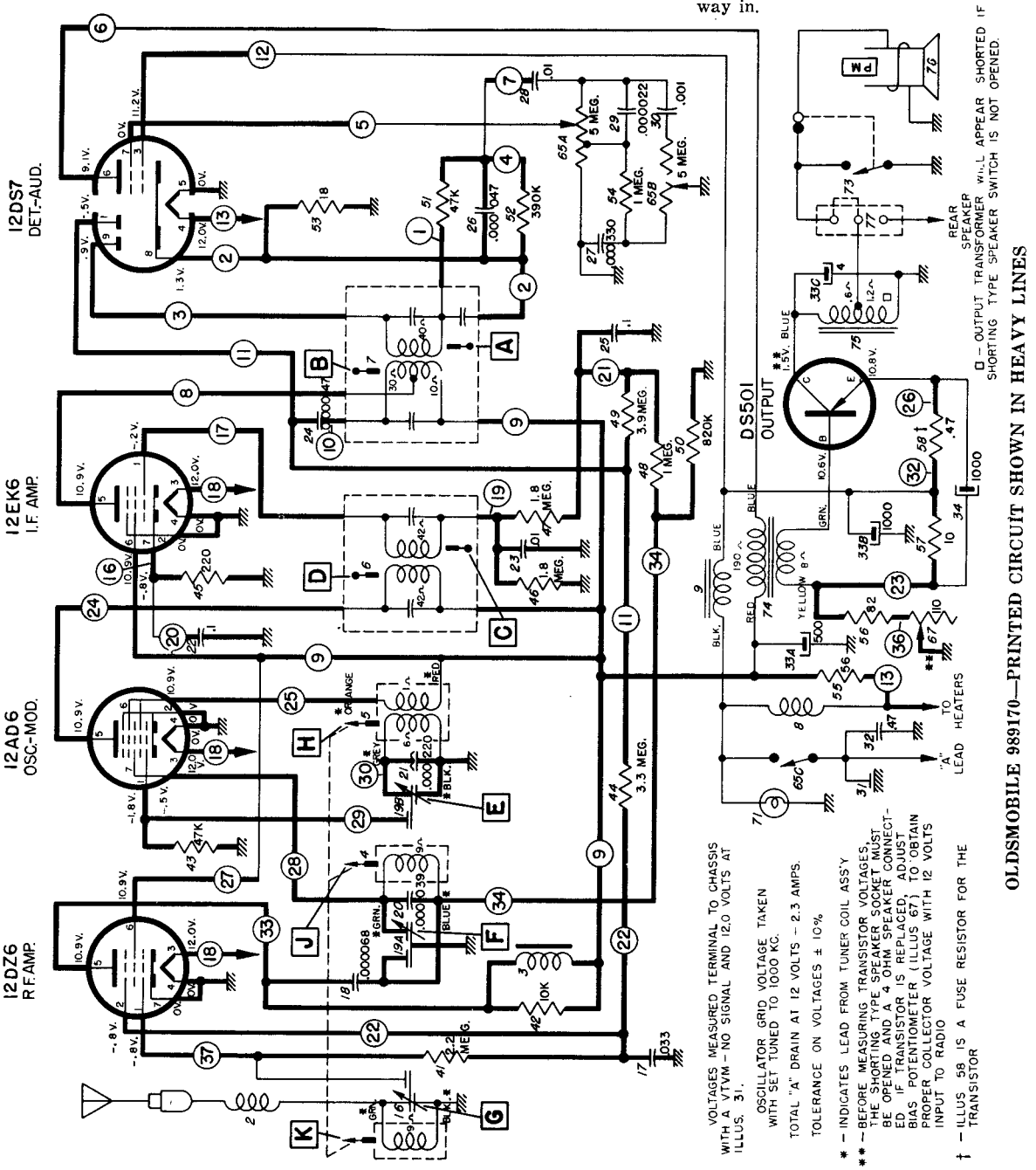


OLDSMOBILE 989170—PRINTED CIRCUIT SHOWN IN HEAVY LINES

# DELCO

OLDSMOBILE MODEL 989170

(Continued from preceding page)

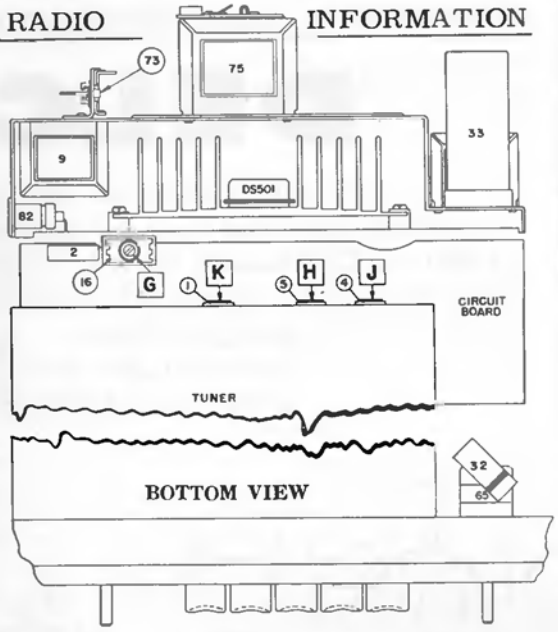


**ALIGNMENT PROCEDURE:**

Output Meter Connections.....Across Voice Coil
Generator Return.....To Receiver Chassis
Dummy Antenna.....In Series With Generator
Volume Control Position.....Maximum Volume
Tone Control Position.....Treble Position
Generator Output.....Minimum for Readable Indication

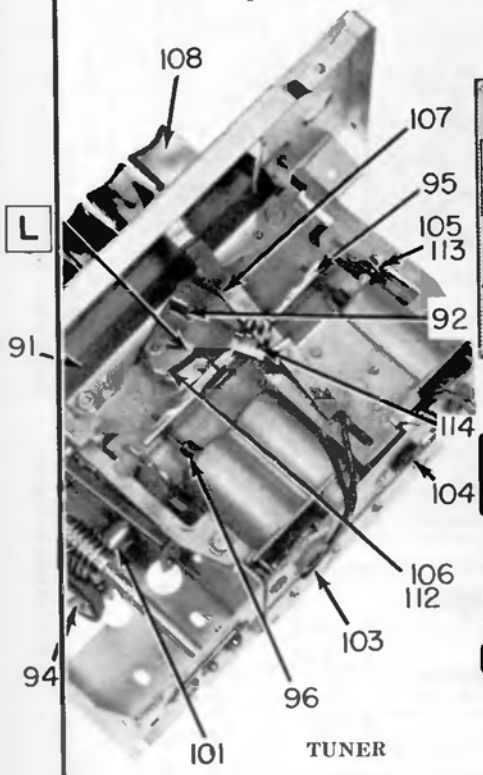


TUNER

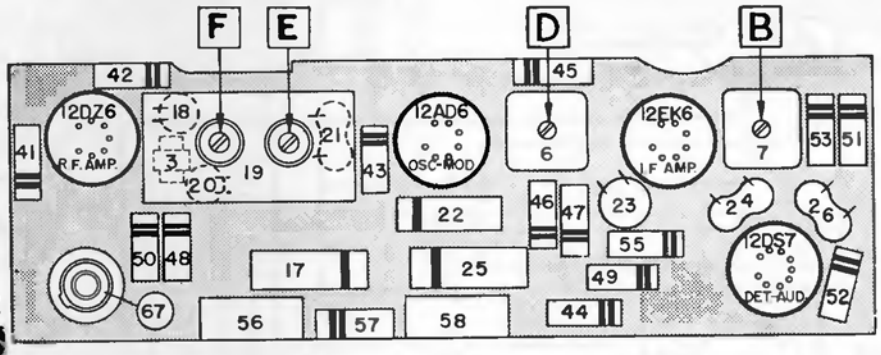


CIRCUIT BOARD—TOP VIEW

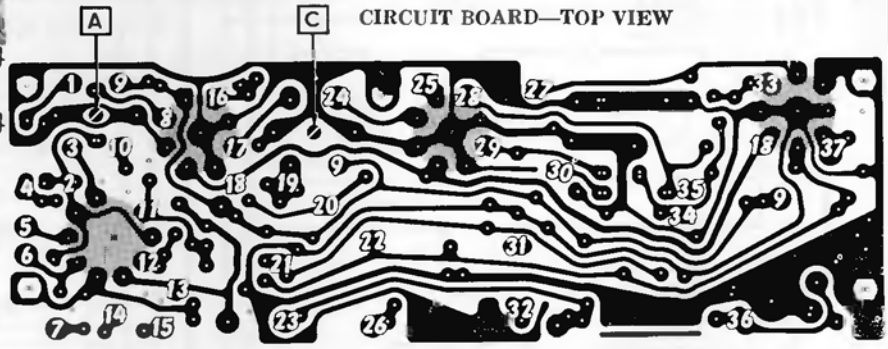


WHITE NUMBERS ON PRINTED CIRCUIT BOARD DRAWING CORRESPOND TO NUMBERS ENCIRCLED ON SCHEMATIC.

| STEPS | SERIES CAPACITOR OR DUMMY ANTENNA | CONNECT SIGNAL GENERATOR TO | SIGNAL GENERATOR FREQUENCY | TUNE RECEIVER TO | ADJUST IN SEQUENCE FOR MAX. OUTPUT |
|---|---|---|---|---|---|
| 1 | 0.1 Mfd. | 12AD6 Grid (Pin #7) | 262 KC | High Frequency Stop | A, B, C, D |
| 2 | 0.000068 Mfd. | Antenna Connector | 1615 KC | High Frequency Stop | *E, F, G |
| 3 | 0.000068 Mfd. | Antenna Connector | 600 KC | Signal Generator Signal | J, K |
| 4 | 0.000068 Mfd. | Antenna Connector | 1615 KC | High Frequency Stop | F, G |
| 5 | 0.000068 Mfd. | Antenna Connector | 1100 KC | Signal Generator Signal | L** |

*Before making this adjustment check mechanical setting of oscillator core "H." The rear of the core should be 1⅝" from the mounting end of the coil form. (This measurement is readily made by inserting a suitable plug in the mounting end of the coil form.) Core adjustment should be made with a non-metallic screwdriver.

**L is the pointer adjustment which is on the connecting link, between the pointer assembly and core guide bar (See tuner Dwg.). It should be adjusted so that when looking directly at the dial the pointer is on the 1100 KC mark. This setting is to give the correct relationship between the pointer and the dial when the radio is installed in a car.

# DELCO

## OLDSMOBILE 989171

Material below and the page adjacent at right is exact for Oldsmobile 989171. The following sets are practically the same electrically.

BUICK 981969,
CHEVROLET 987893,
PONTIAC 988977

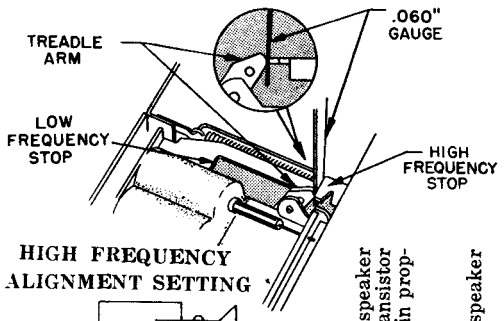


HIGH FREQUENCY ALIGNMENT SETTING

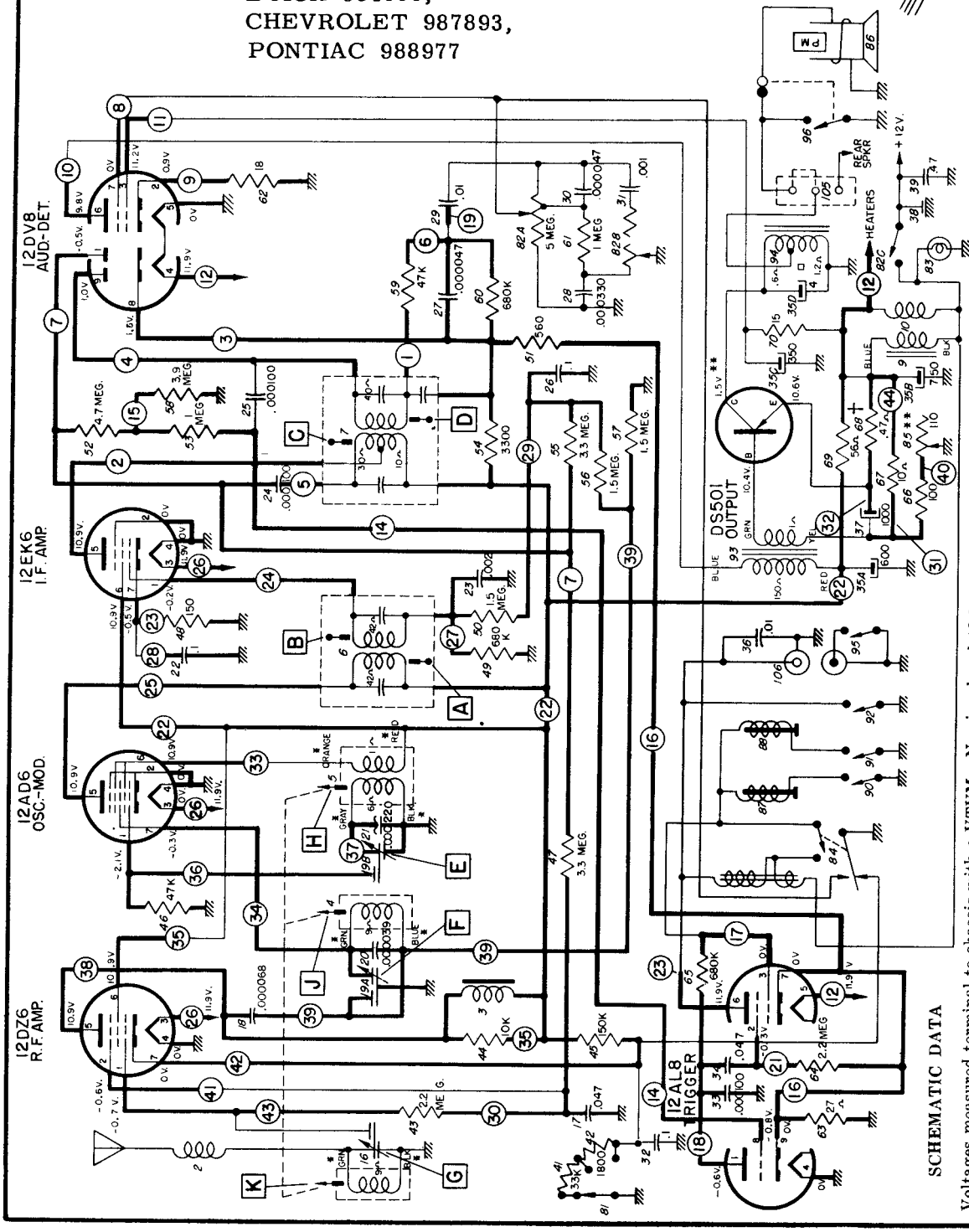


SCHEMATIC DATA

Voltages measured terminal to chassis with a VTVM - No signal and 12.0 volts at Illustration 38.

Oscillator grid voltage taken with set tuned to 1000 kc.

Total "A" drain at 12 volts - 2.6 amps.

Tolerance on voltages ±10%.

*—Indicates lead from tuner coil assembly.

**—Before measuring transistor voltages, the shorting type speaker socket must be opened and a 4 ohm speaker connected. If transistor is replaced, adjust bias potentiometer (Illustration 85) to obtain proper collector voltage with 12 volts input to radio.

+—Illustration 68 is a fuse resistor for the transistor.

□—Output transformer may appear shorted if shorting type speaker socket is not held open.

OLDSMOBILE 989171 PRINTED CIRCUIT SHOWN IN HEAVY LINES

## DELCO OLDSMOBILE 989171 (Continued)

For list of similar models, see preceding page.

WHITE NUMBERS ON PRINTED CIRCUIT DRAWING CORRESPOND TO THE ENCIRCLED NUMBERS ON SCHEMATIC.

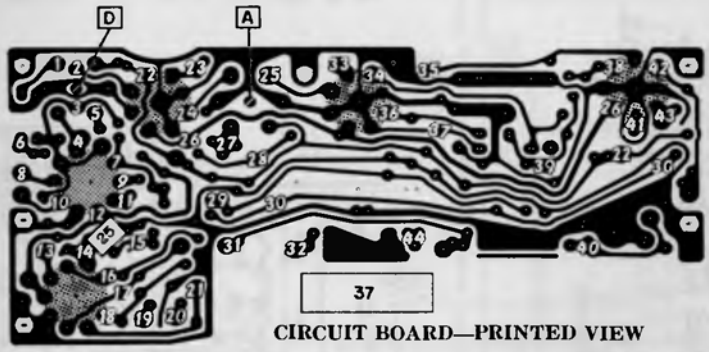


CIRCUIT BOARD—PRINTED VIEW

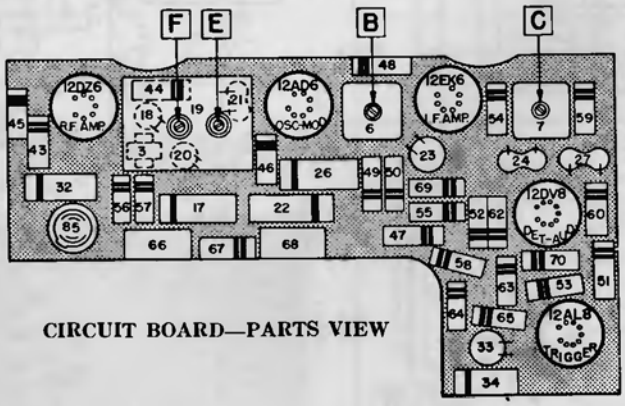


CIRCUIT BOARD—PARTS VIEW

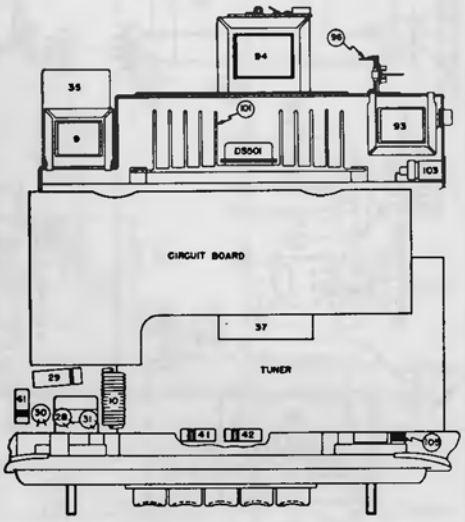


RECEIVER PARTS LAYOUT—TOP VIEW

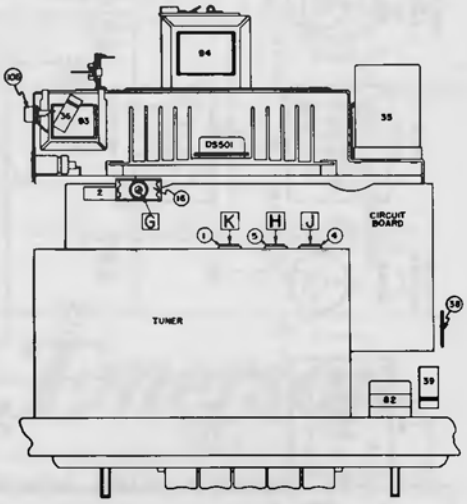


RECEIVER PARTS LAYOUT—BOTTOM VIEW

## SIGNAL SEEKING TUNER ALIGNMENT PROCEDURE

NOTE: When aligning the signal seeker tuner type radio, be sure to use a vacuum tube voltmeter as indicated.

Output Meter Connection.....VTVM from AVC line (#27 Island-Circuit Board) To Chassis
Generator Return.....Receiver Chassis
Dummy Antenna.....In Series With Generator
Sensitivity Control.....Maximum
Volume Control.....Maximum Volume
Tone Control.....Treble
Generator Output.....Not to exceed 2 volts at VTVM

| STEP | DUMMY ANTENNA | CONNECT SIGNAL GENERATOR TO | SIGNAL GENERATOR FREQUENCY | TUNE RECEIVER TO | ADJUST IN SEQUENCE FOR OUTPUT INDICATED |
|---|---|---|---|---|---|
| 1 | 0.1 Mfd. | 12AD6 Grid (Pin 7) | 262 KC | *High Frequency Stop | A, B, C (Max.), D (Min.) |
| 2 | .000068 Mfd. | Antenna Connector | 1615 KC | High Frequency Stop | **E, F, G (Max.) |
| 3 | .000068 Mfd. | Antenna Connector | 600 KC | Signal Generator Signal | J, K (Max.) |
| 4 | .000068 Mfd. | Antenna Connector | 1615 KC | Signal Generator Signal | F, G (Max.) |
| 5 | .000068 Mfd. | Antenna Connector | 1100 KC | Signal Generator Signal | ***L |

*To tune to high frequency, put a .070" feeler gauge in slot against the high frequency stop. (See Page 30. Depress station selector bar and allow the treadle bar arm to run against the feeler gauge. Turn the radio off and then back on. This positions the tuner near the point where the treadle switch closes.

**Before making this adjustment, check the setting of oscillator core "H." The rear of the core should be 1⅝" from the mounting end of the coil form. This measurement is readily made by inserting a suitable plug in the mounting end of the coil form. The core adjustment is made from the mounting end of the coil form with a non-metallic screwdriver.

***"L" is the pointer adjustment slot on the pointer assembly—adjust so pointer reads 1100 KC.
With the radio installed and the antenna plugged in, adjust the antenna trimmer "G" for maximum volume with the radio tuned to a weak station between 600 and 1000 KC (see sticker on case.)

EMERSON RADIO
Model 877, Chassis 120392B

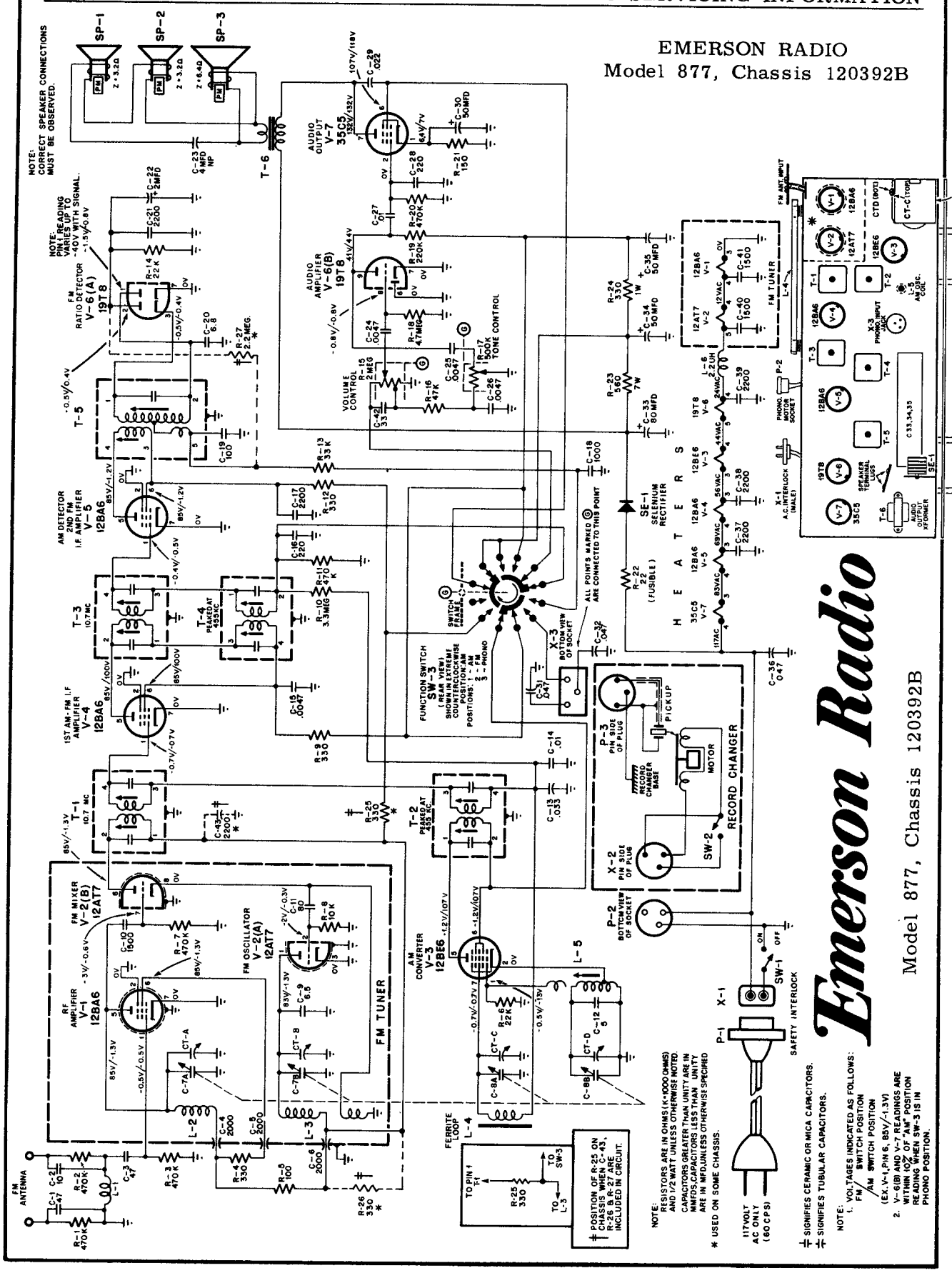

# Emerson

Models 834X, 890, 892A, Chassis 120394B

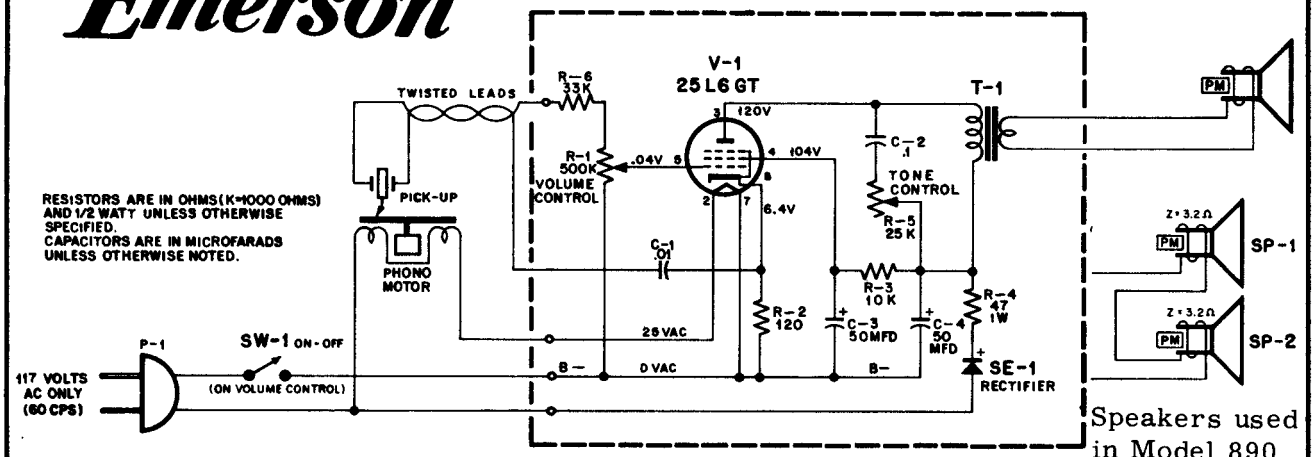


Speakers used in Model 890.

# Emerson

MODELS:
893B, 894B

CHASSIS:
120430B, 432B

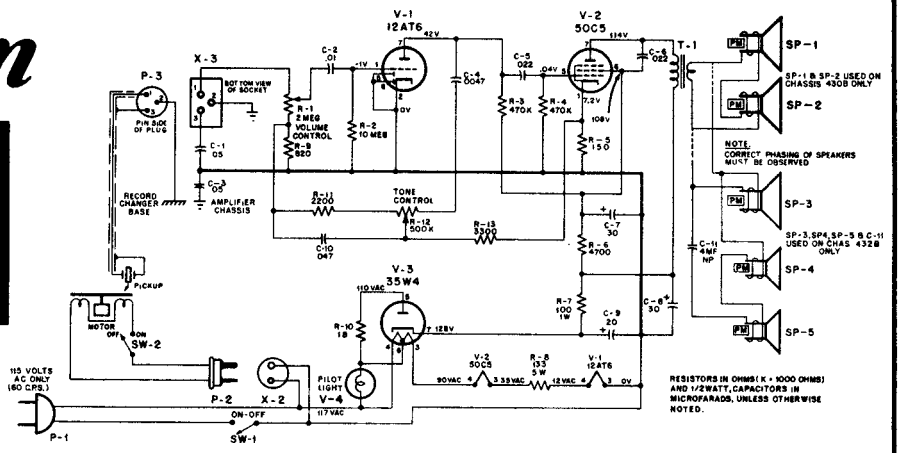


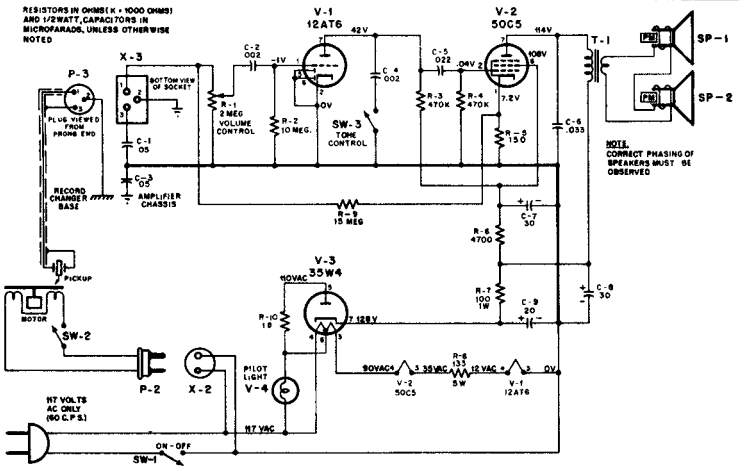


1. Voltages indicated are positive d.c., resistances in ohms, unless otherwise indicated.
2. Measurements made with voltohmyst or equivalent.
3. All measurements taken from pin to B neutral unless otherwise indicated.
4. Voltage measurements taken with:
   a) Line voltage maintained at 117 volts a.c. only.
   b) Volume control set for maximum volume.
   c) Phona plugs disconnected.
5. Resistance measurements taken with:
   a) Power line cord disconnected from outlet.
   b) Volume control set for maximum volume.
   c) Phono plugs disconnected.
6. Nominal tolerance on component values make possible a variation of ± 15% in voltage and resistance readings.

# Emerson

Model 891B, Chassis 120399B

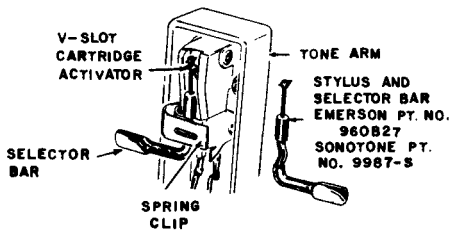


### TO REPLACE STYLUS AND SELECTOR BAR

For best operation and record tracking, it is recommended that the stylus (needle) and selector bar (flip-over arm) be replaced as a single unit. To change this unit, proceed as follows:

1. Lift up tone arm.
2. With one hand, hold spring clip in a direction away from tone arm.
3. With other hand, slide out selector bar and stylus as shown in diagram.
4. To replace new stylus and selector bar, reverse above procedure.

# Emerson Radio

**MODEL 888**
**"TRANSTIMER"**
**CHASSIS 120416**

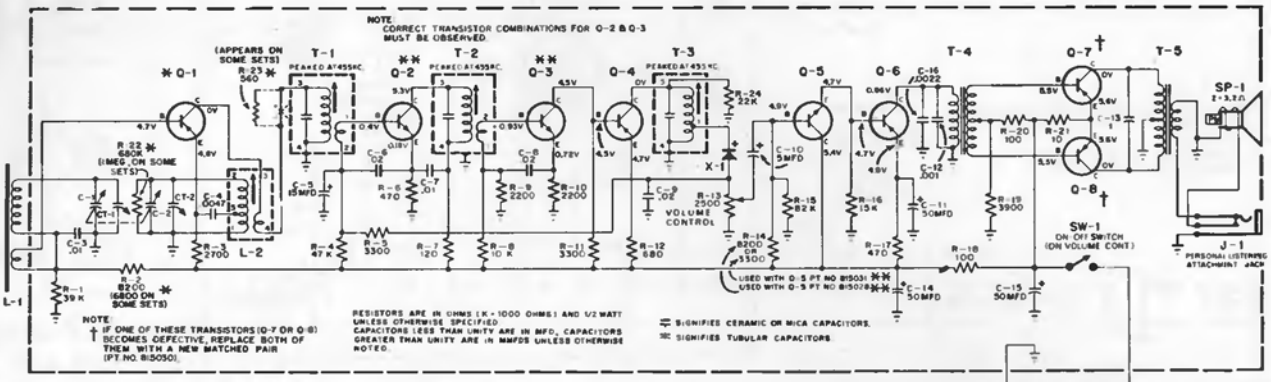


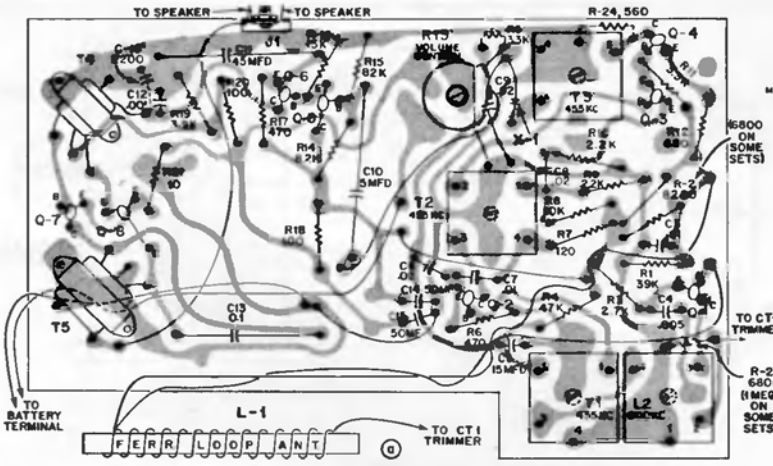


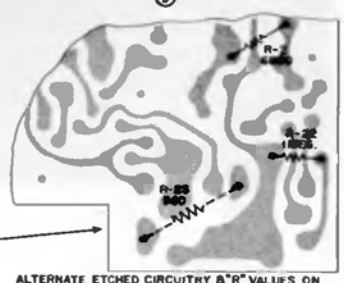

ALTERNATE ETCHED CIRCUITRY & "R" VALUES ON SOME BOARDS (R-23 IS MOUNTED ON UNDERSIDE OF BOARD). REFER. SCHEMATIC.

** It will be seen from the schematic drawing of the 888 that certain transistors are used in pairs and are associated with specified resistors. Some individual transistors must likewise be used with specific resistors.
Because of the small physical size of the transistors, the 1st three digits, "815", have been replaced by the letter, "E"

| TRANSISTOR PAIRS Q2 | TRANSISTOR PAIRS Q3 | ASSOCIATED R12 |
|---|---|---|
| 815026C | 815026A | 680 |
| 815026B | 815026B | 680 |
| 815026B | 815026D | 680 |

| TRANSISTOR PAIRS Q2 | TRANSISTOR PAIRS Q3 | ASSOCIATED R12 |
|---|---|---|
| 815026C | 815026E | 680 |
| 815026D | 815026D | 680 |
| 815026C | 815026F | 330 |

| TRANSISTOR Q5 | ASSOCIATED R14 |
|---|---|
| 815031 | 3800 |
| 815028 | 8200 |
| 815032 | 4700 |

| TRANSISTOR Q5 | ASSOCIATED R14 |
|---|---|
| 815033 | 6800 |
| 815034 | 8200 |
| 815035 | 10,000 |

| TRANSISTOR SUBSTITUTES FOR | USE | TRANSISTOR NOS. |
|---|---|---|
| 815026B | 815026D | Q2/Q3 |
| 815026A | 815026E | Q2/Q3 |
| 815026C | No Subst. | Q2/Q3 |

| TRANSISTOR SUBSTITUTES FOR | USE | TRANSISTOR NOS. |
|---|---|---|
| 815026F | No. Subst. | Q2/Q3 |
| 815028 | 815032 | Q5 |
| 815031 | 815032 | Q5 |

| TRANSISTOR SUBSTITUTES FOR | USE | TRANSISTOR NOS. |
|---|---|---|
| 815033 | 815032 | Q5 |
| 815034 | 815032 | Q5 |
| 815035 | 815032 | Q5 |

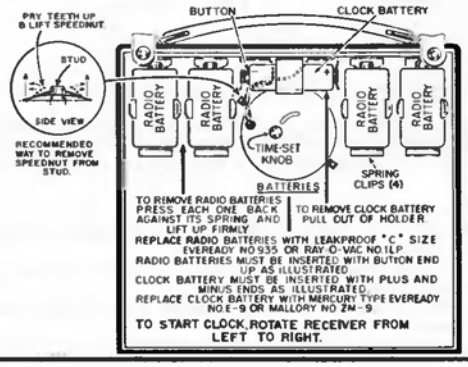


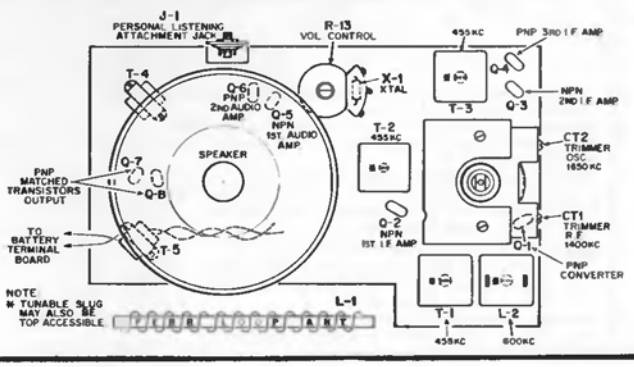

# Emerson Radio

## Model 895B, Chassis 120431B

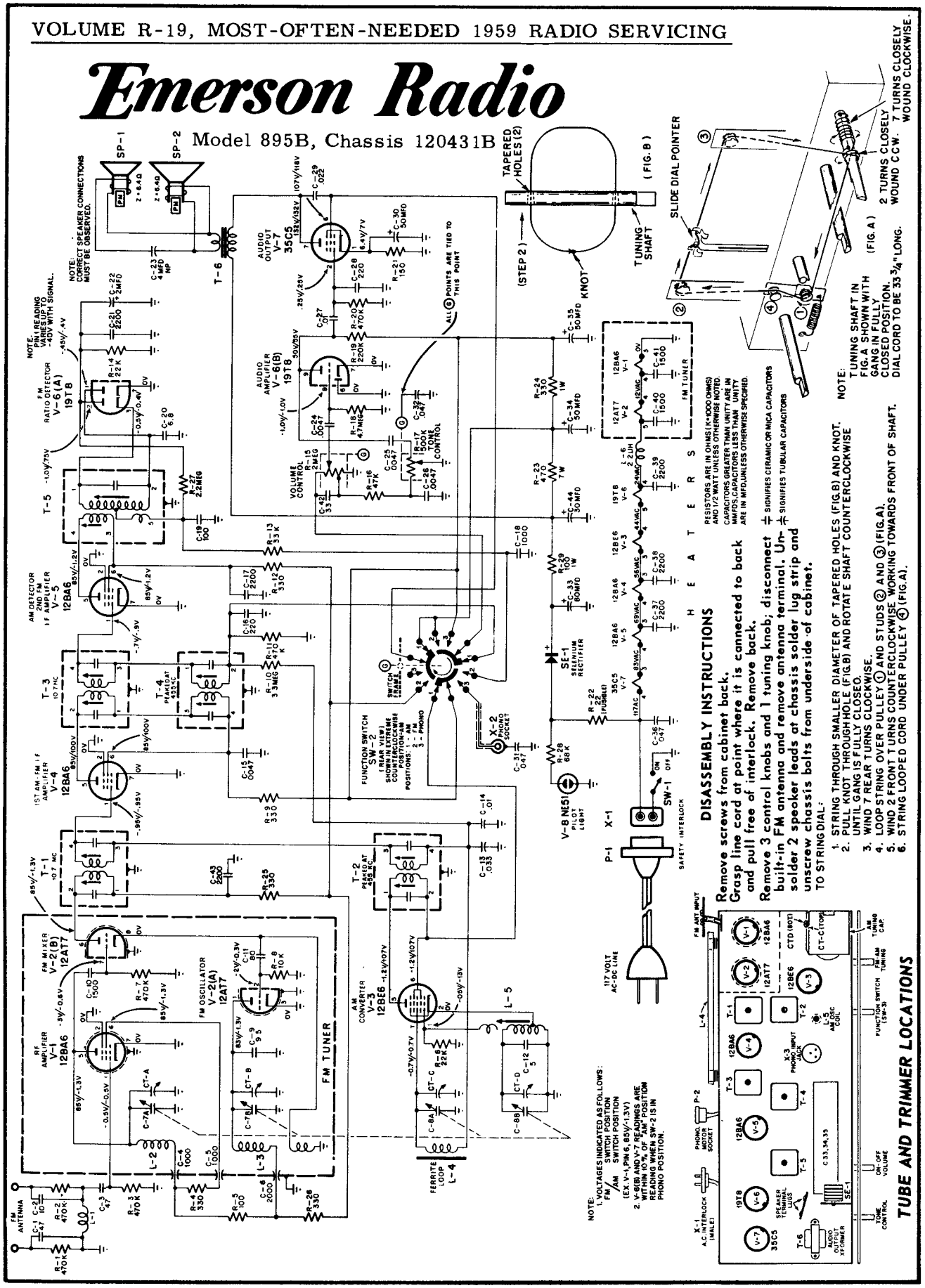

## EMERSON RADIO Model 999, Chassis 120433B, and Model 999R, Chassis 120433R

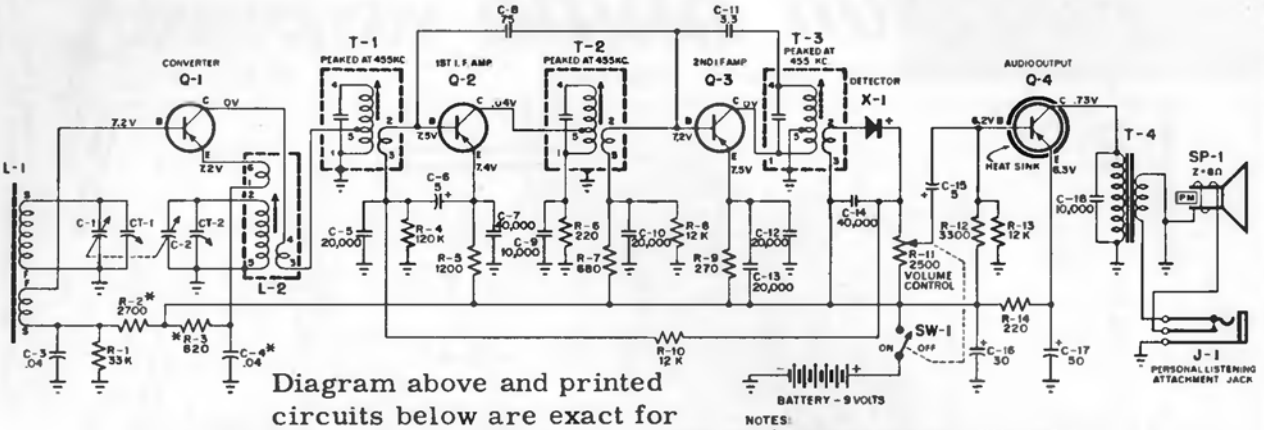


Diagram above and printed circuits below are exact for Chassis 120433B, Model 999.

NOTES:
‡ SIGNIFIES CERAMIC OR MICA CAPACITORS, CAPACITY IN MICRO-MICROFARADS.
‡ SIGNIFIES TUBULAR CAPACITORS, CAPACITY IN MICROFARADS. RESISTORS ARE IN OHMS (K=1000 OHMS) AND 1/2 WATT.
* SOME SETS WILL USE THE FOLLOWING VALUES:
R-2, 6800Ω
R-3, 2700Ω
C-4, 20,000 (CERAMIC)

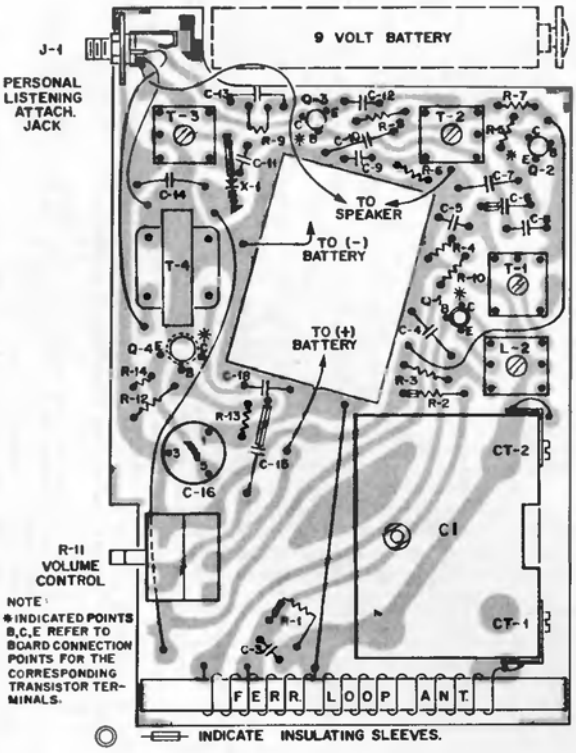


NOTE:
* INDICATED POINTS B,C,E REFER TO BOARD CONNECTION POINTS FOR THE CORRESPONDING TRANSISTOR TERMINALS.

PRINTED CIRCUIT CHASSIS DIAGRAM (TOP VIEW)

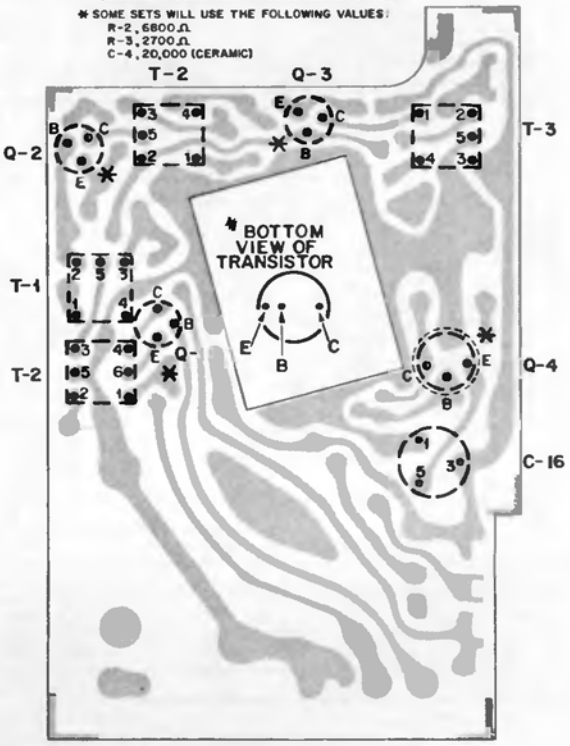


PRINTED CIRCUIT CHASSIS DIAGRAM (BOTTOM VIEW)

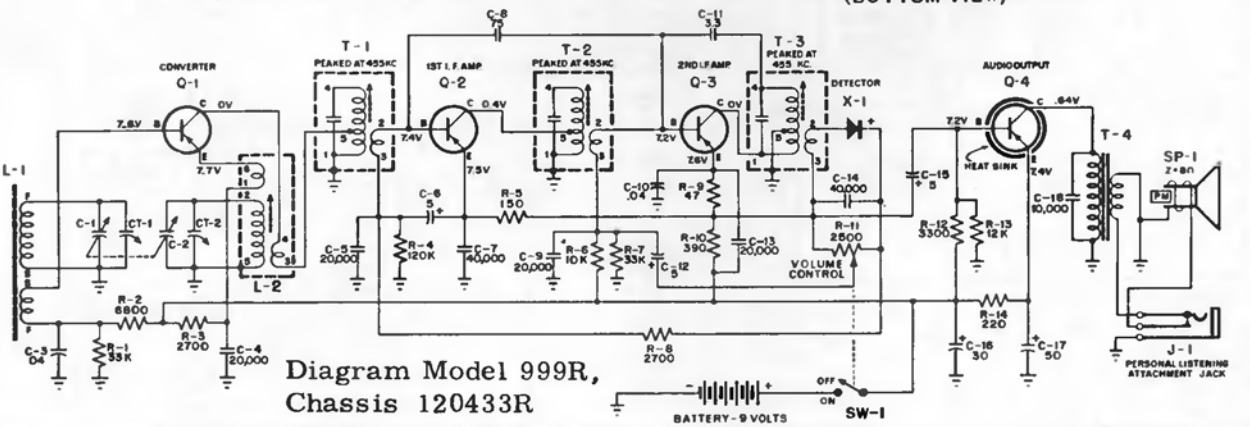


Diagram Model 999R, Chassis 120433R

# Emerson Radio

Models 896B, 970, 971, 971A, Chassis 120455B, and Model 902, Chassis 120459B.

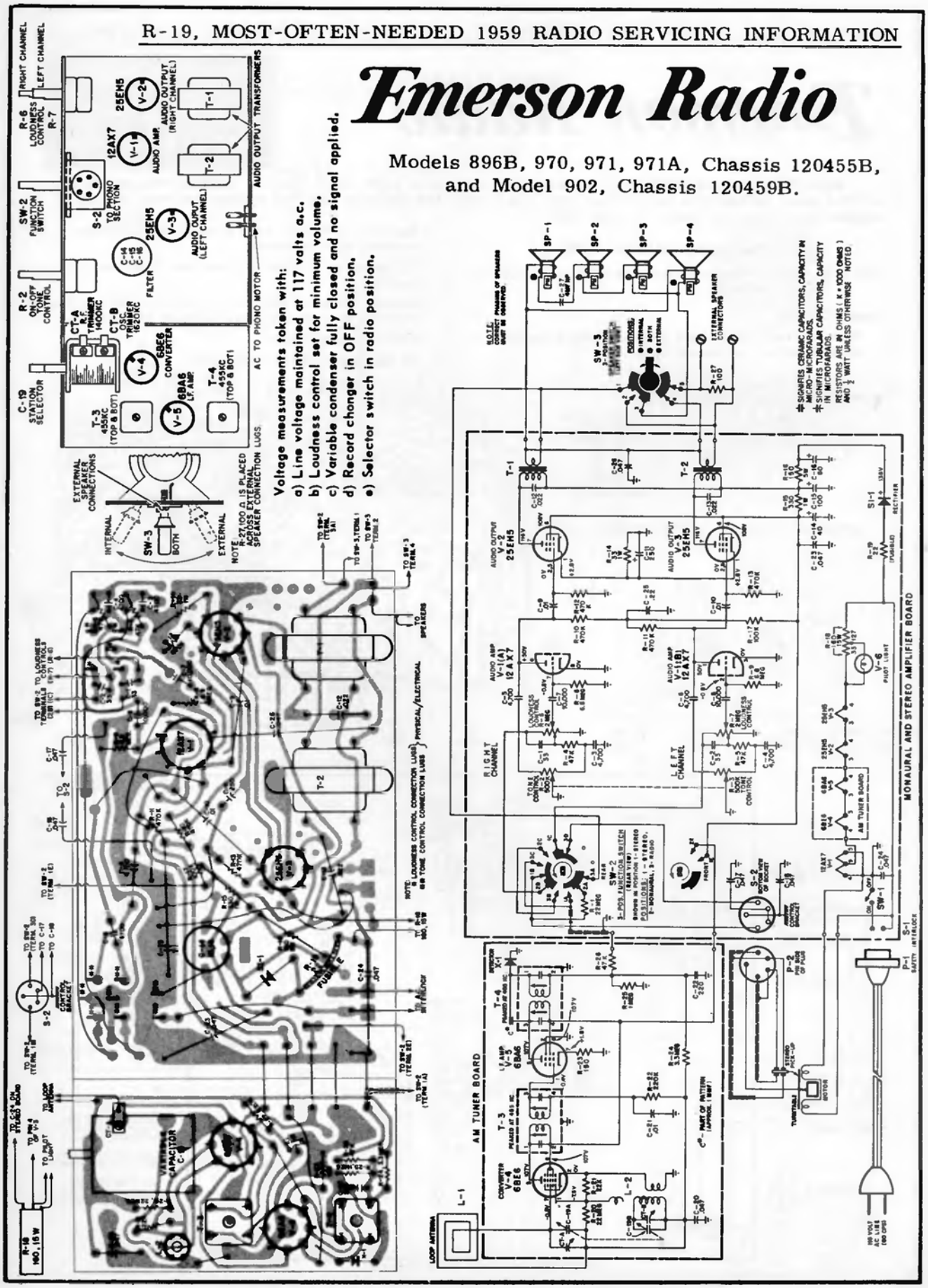

# Emerson Radio

**MODEL 898B**
**CHASSIS 120456B**
**MODELS 970, 971, 971A**

MODEL 903, chassis 120462B, is electrically similar to model 898B, chassis 120456B. Therefore, all control panel information is directly applicable, with the addition that the speaker selector switch is mounted on the control panel in model 903.

## DISASSEMBLY INSTRUCTIONS

NOTE: To replace tubes, only masonite back within cabinet need be removed.

Record Changer:

Remove three Phillips head screws holding masonite back to cabinet and remove back.

Remove four Phillips head screws holding changer mounting board to cabinet.

Tilt mounting board up and back to a stable vertical position.

Remove five-prong plug and AC plug and line cord from amplifier chassis. (Unstaple fishpaper wire holders.)

Remove record changer.

To reassemble, reverse procedure.

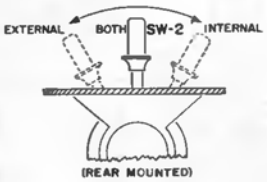



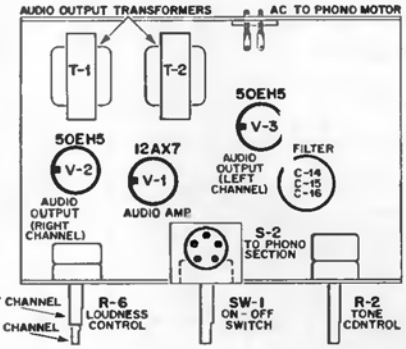


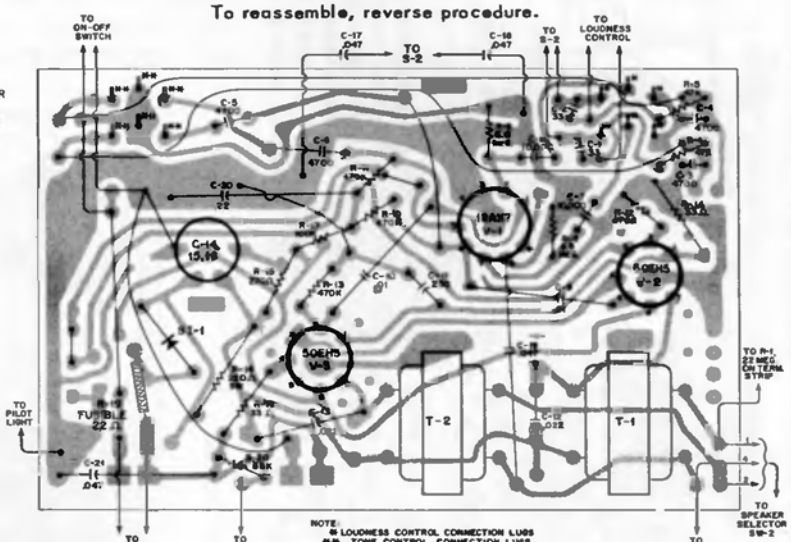


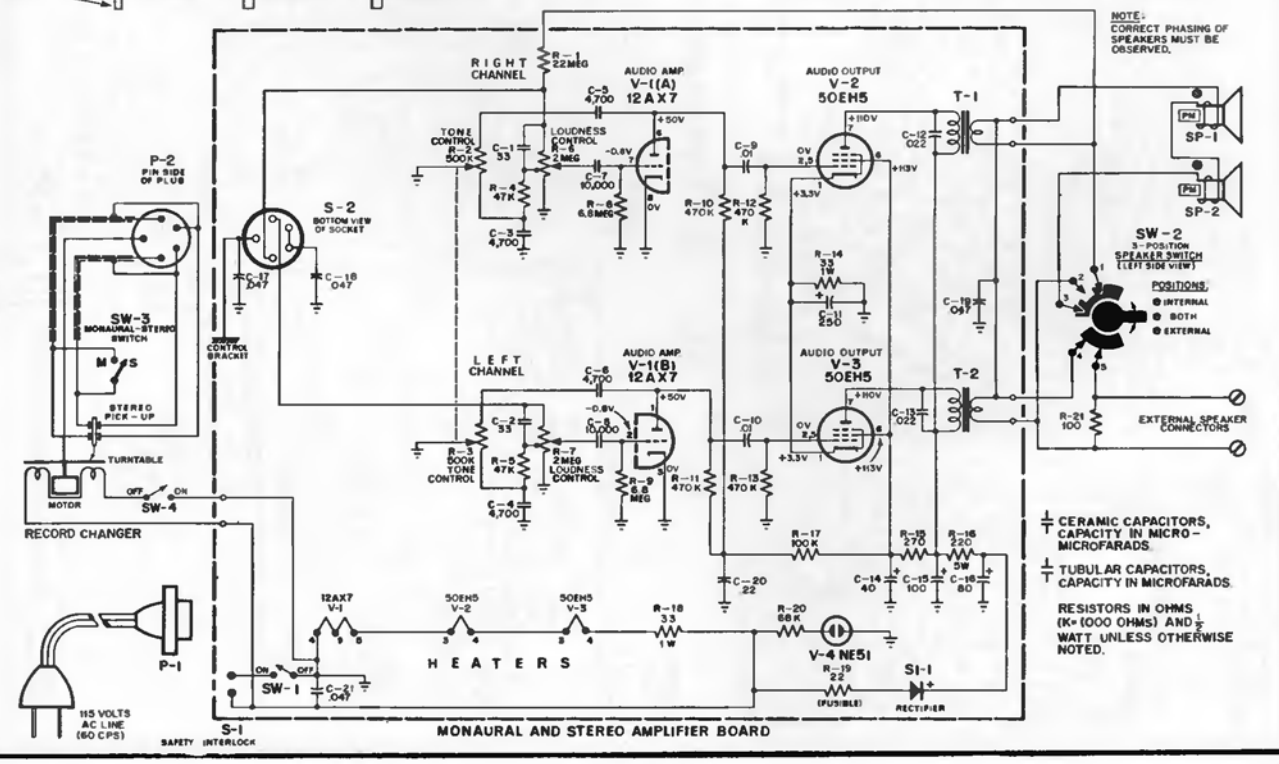


MONAURAL AND STEREO AMPLIFIER BOARD

# GENERAL ELECTRIC COMPANY

**MODELS**
**T105A**
**T106A,B**
**T107B**

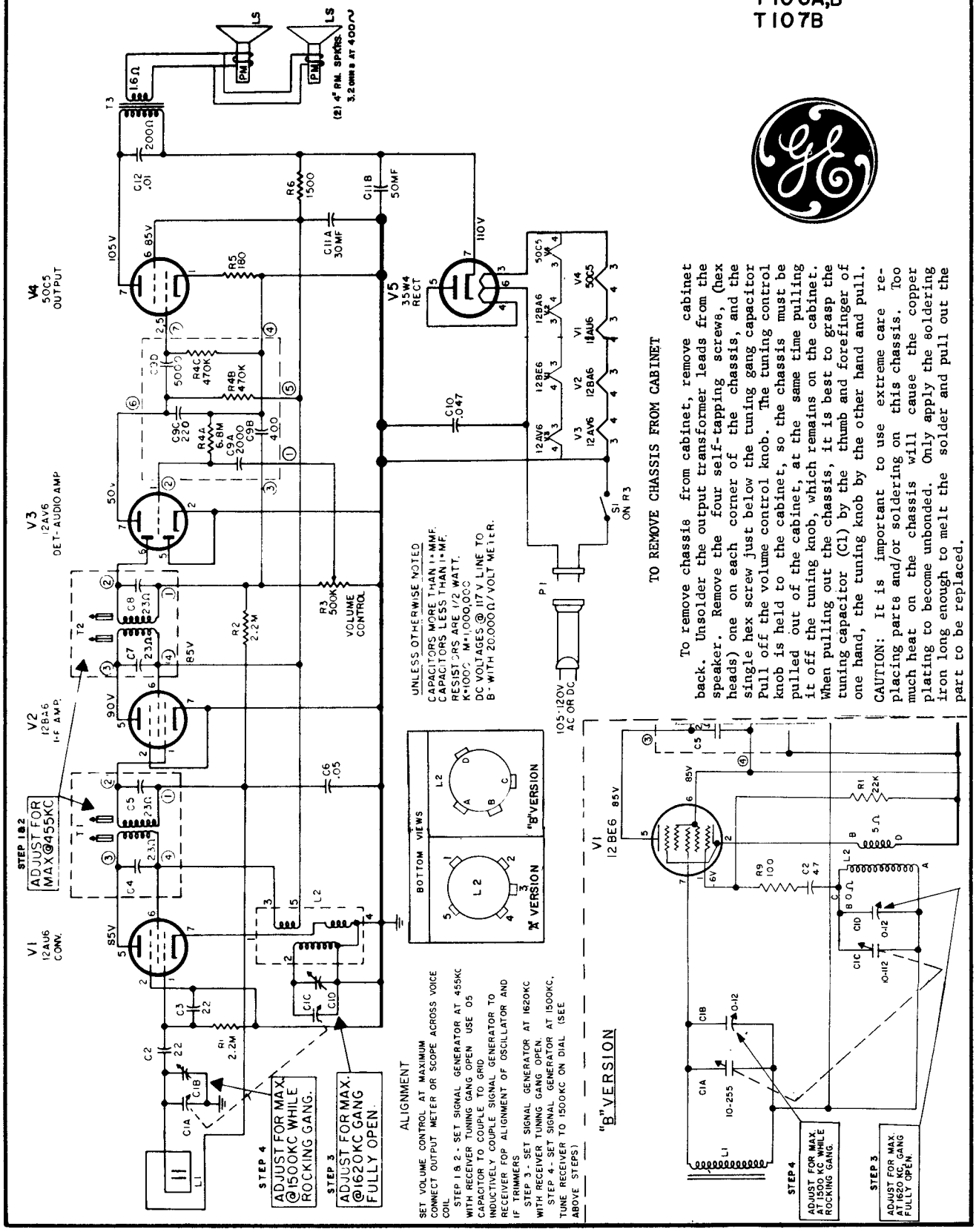


## TO REMOVE CHASSIS FROM CABINET

To remove chassis from cabinet, remove cabinet back. Unsolder the output transformer leads from the speaker. Remove the four self-tapping screws, (hex heads) one on each corner of the chassis, and the single hex screw just below the tuning gang capacitor Pull off the volume control knob. The tuning control knob is held to the cabinet, so the chassis must be pulled out of the cabinet, at the same time pulling it off the tuning knob, which remains on the cabinet. When pulling out the chassis, it is best to grasp the tuning capacitor (C1) by the thumb and forefinger of one hand, the tuning knob by the other hand and pull.

CAUTION: It is important to use extreme care replacing parts and/or soldering on this chassis. Too much heat on the chassis will cause the copper plating to become unbonded. Only apply the soldering iron long enough to melt the solder and pull out the part to be replaced.

# GENERAL ELECTRIC

MODELS
TI15A
TI16A

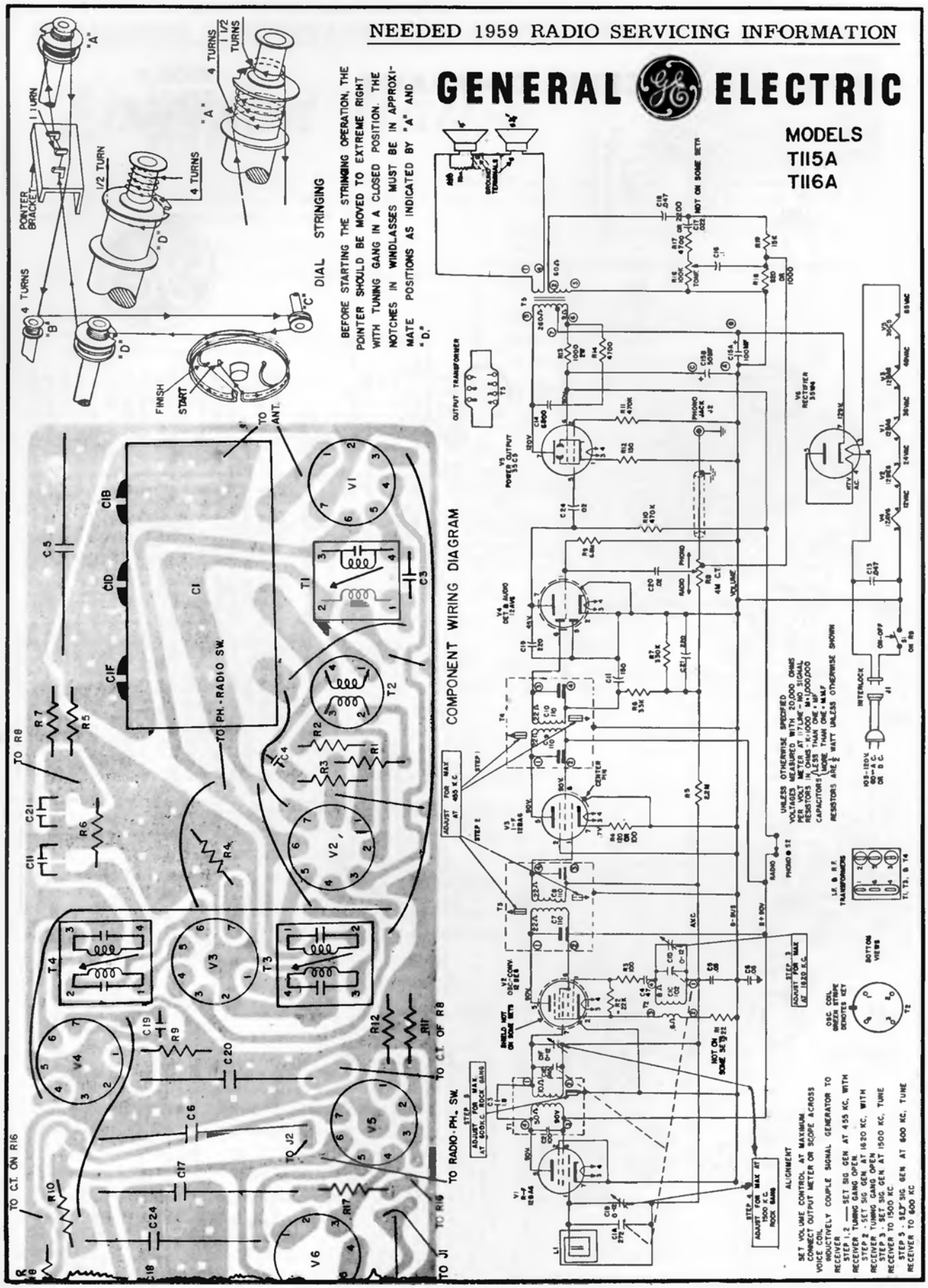

# GENERAL ELECTRIC COMPANY

MODELS
T120A,B

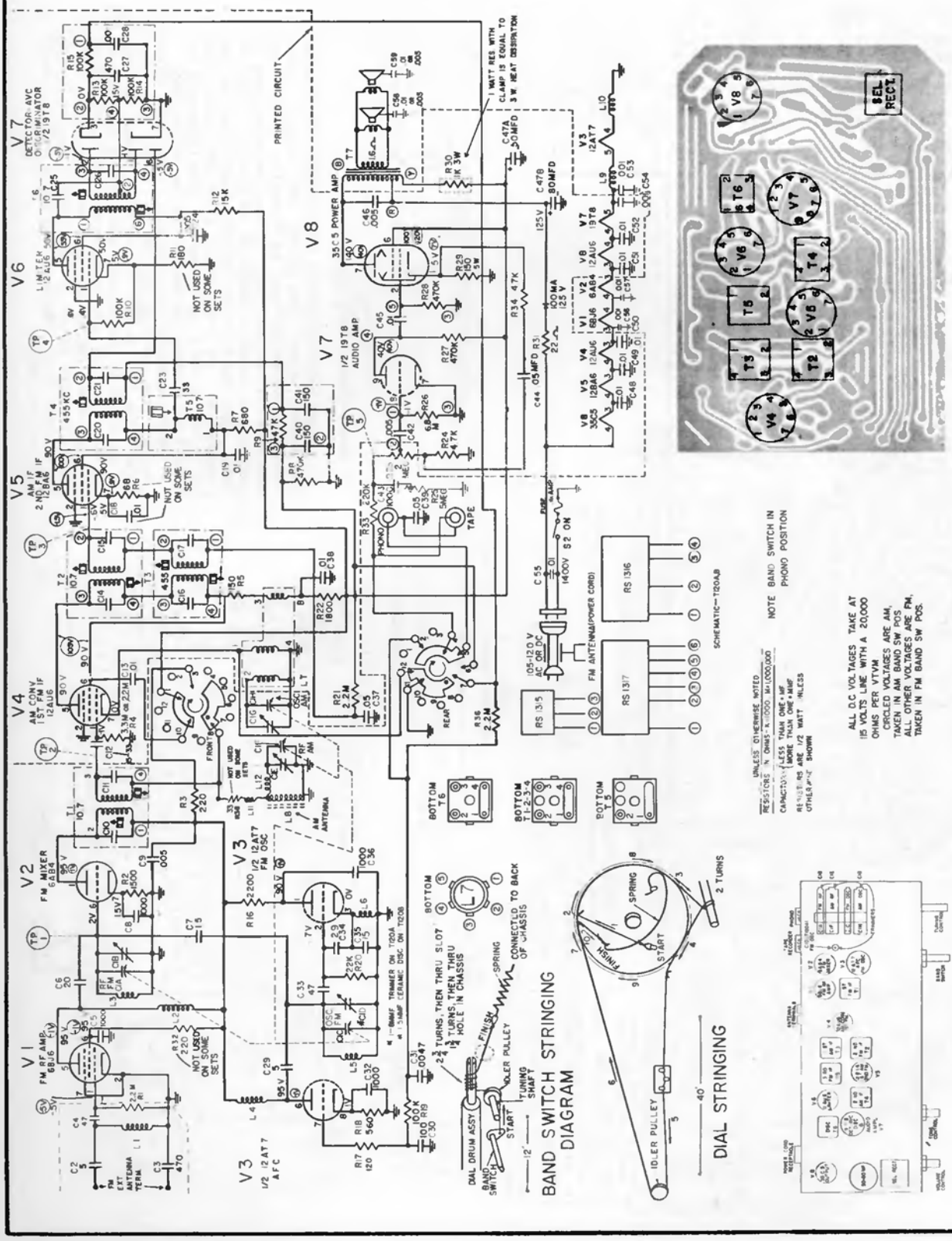

# GENERAL ELECTRIC COMPANY

## Models T125A, T126A, T127A

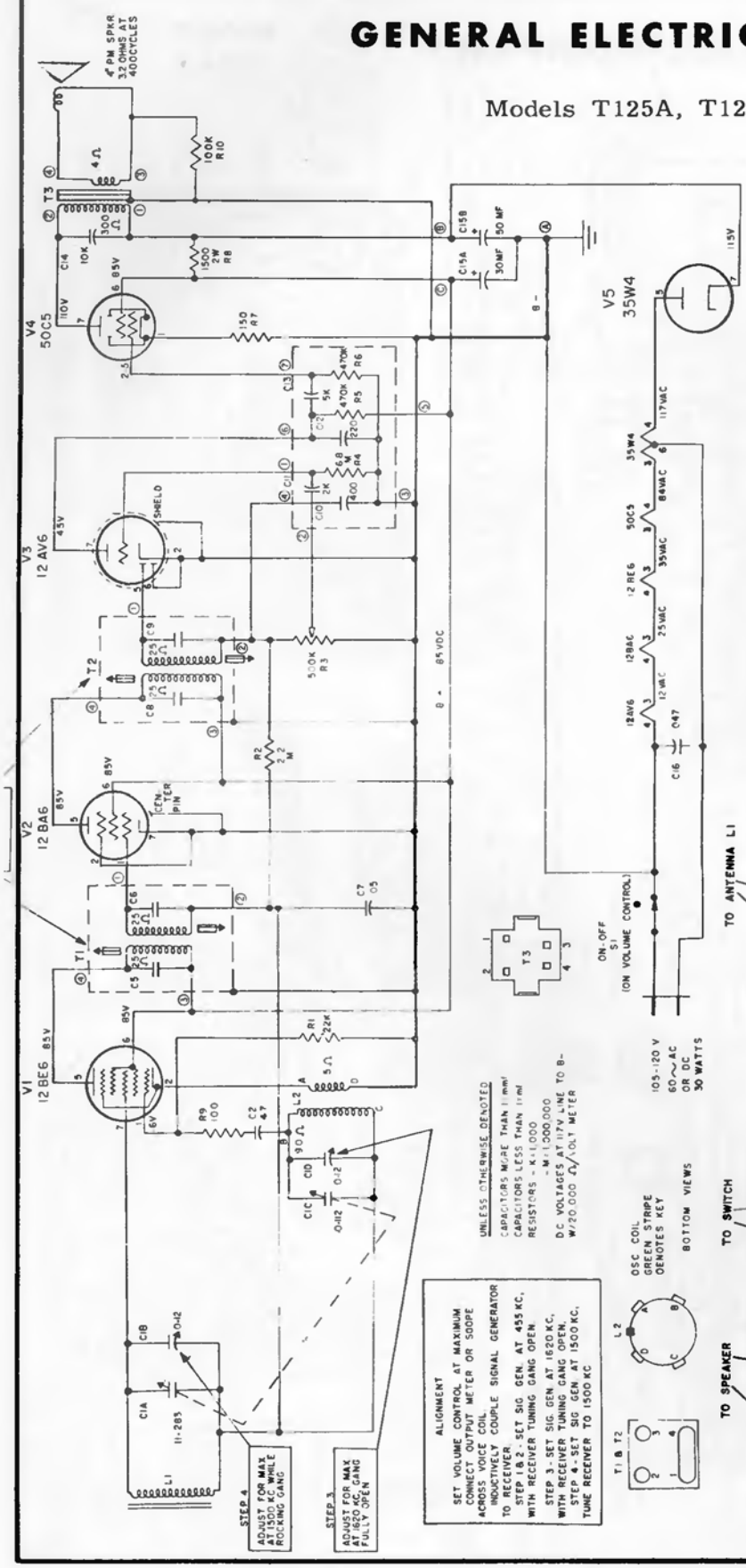


TO REMOVE CHASSIS FROM CABINET:

After removing cabinet back remove the screw on the cabinet bottom that holds the chassis board support. The tuning knob is a captive knob and remains in the cabinet front. Close the tuning gang to prevent any possible damage to the plates. Slide one hand under the printed chassis board placing the fingers over the front edge. Slide the board back out of the grooves on either end simultaneously removing the tuning gang shaft from the tuning knob.

When replacing the chassis, close the tuning gang and line the flat side of the tuning gang shaft up with the flat in the tuning knob. Place the ends of the board in the grooves and push on the edge of the board, not on the components. The tuning shaft will enter the tuning knob and the front edge of the board will seat itself in the grooved bosses inside the cabinet front. Replace the board support and self-tapping screw.

# GENERAL ELECTRIC COMPANY

## Models T130A,B, T131A,B, T132A,B

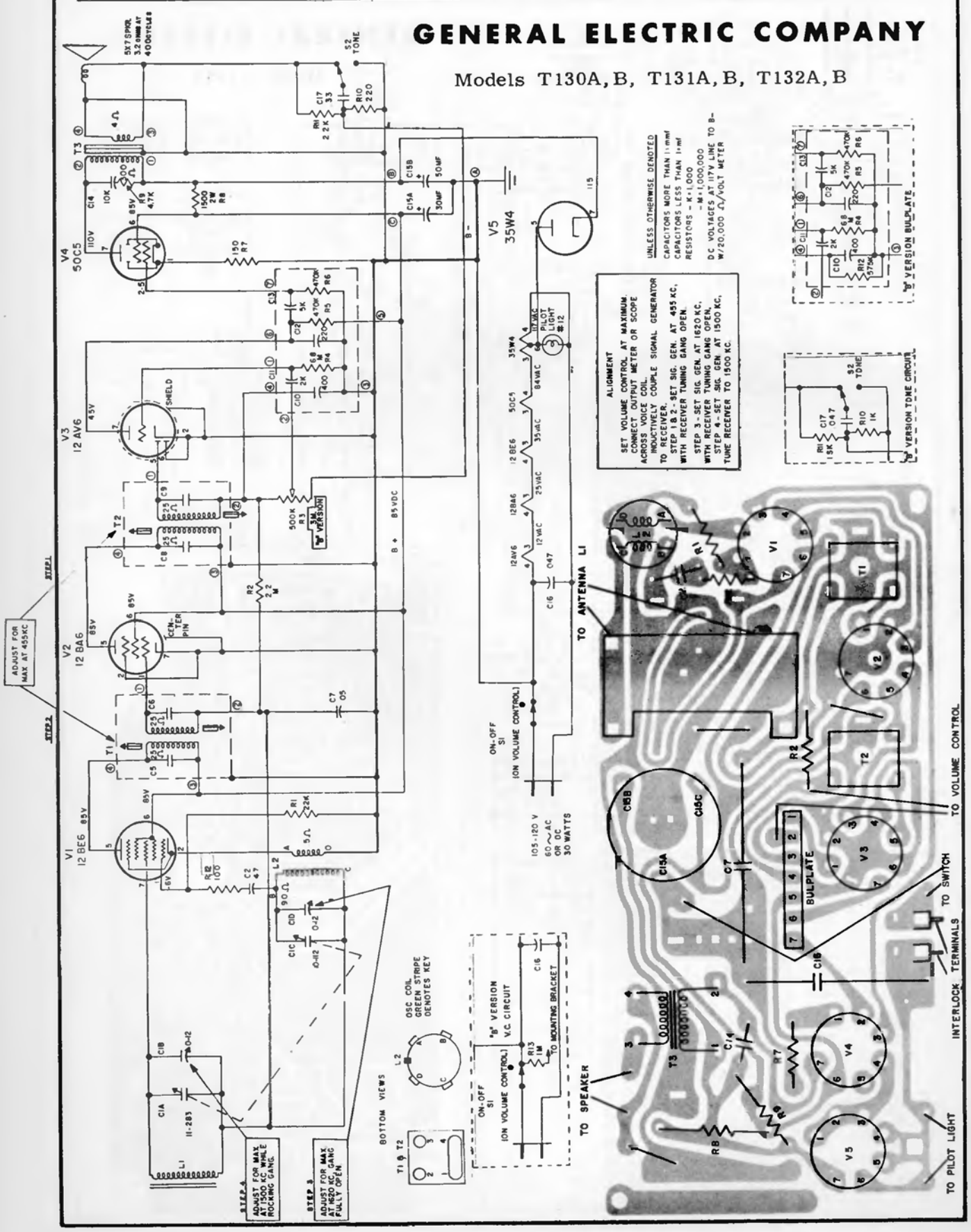

# GENERAL ELECTRIC

Model T135A

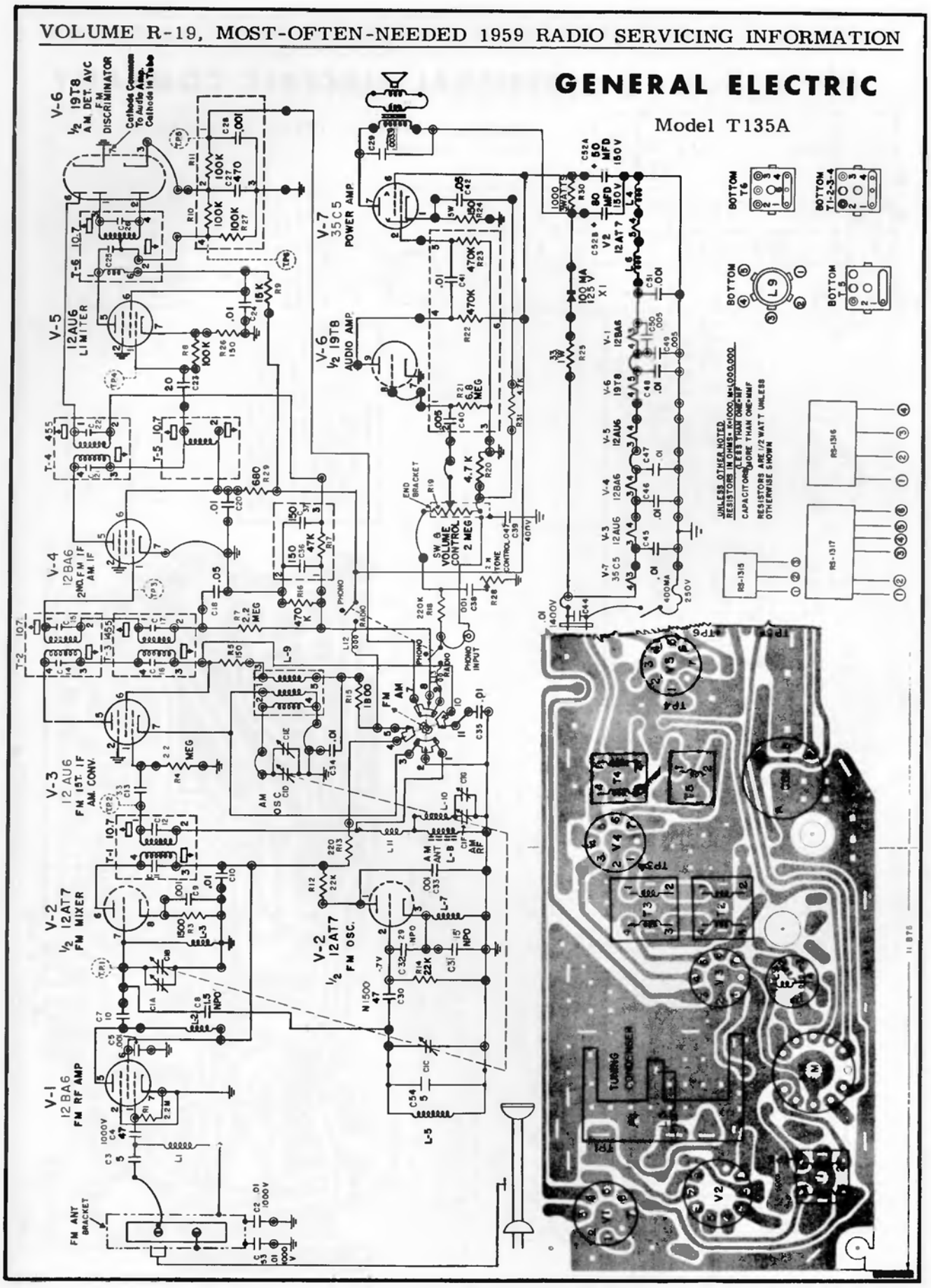

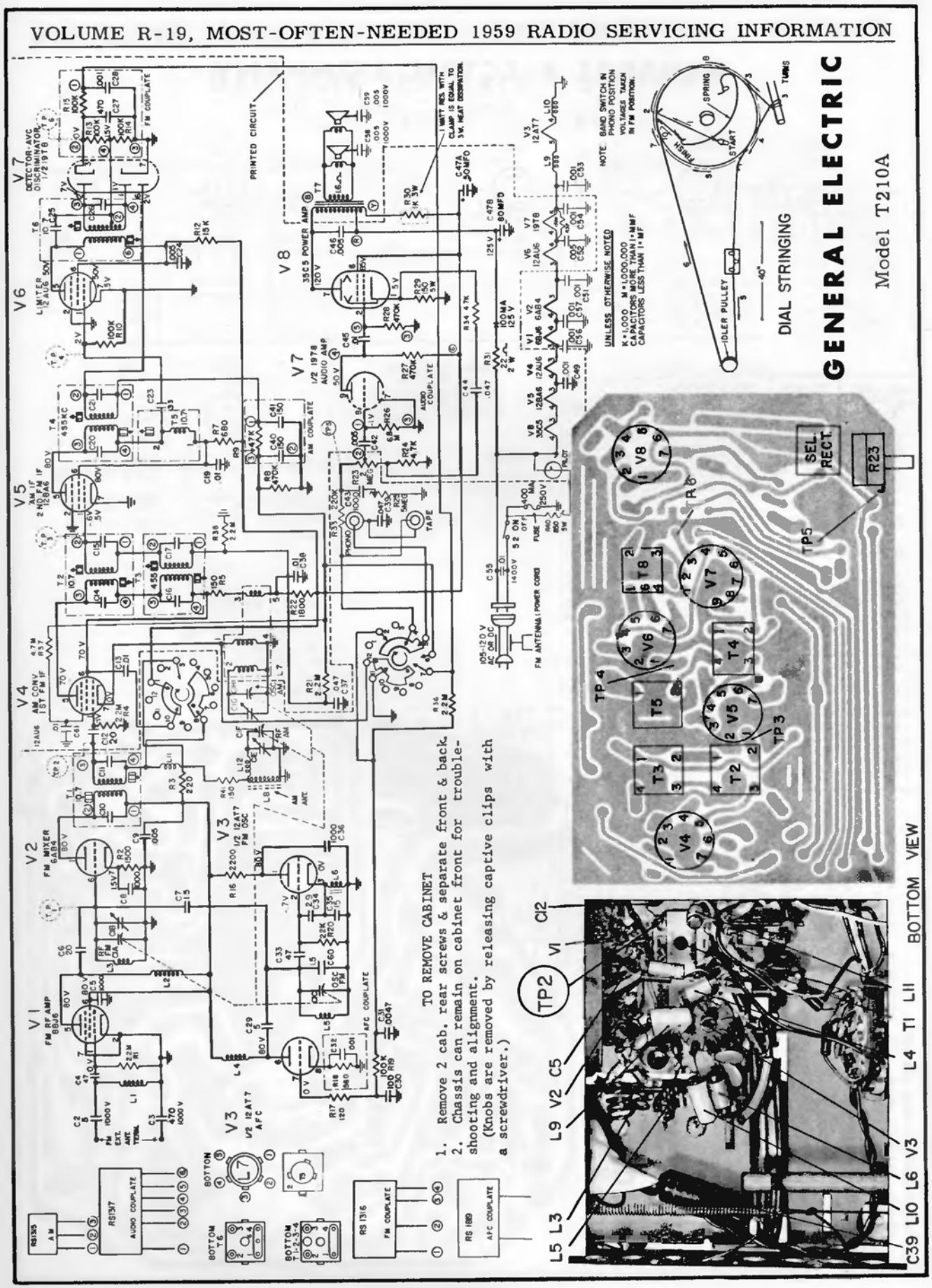
GENERAL ELECTRIC
Model T210A
DIAL STRINGING
BOTTOM VIEW
TO REMOVE CABINET
1. Remove 2 cab. rear screws & separate front & back.
2. Chassis can remain on cabinet front for trouble-shooting and alignment.
(Knobs are removed by releasing captive clips with a screwdriver.)
PRINTED CIRCUIT
V1 FM RF AMP 6BQ6
V2 FM MIXER 6AB4
V3 1/2 12AT7 FM OSC
V3 1/2 12AT7 AFC
V4 AM CONV 1ST FM IF 12AU6
V5 AM IF 2ND FM IF 12BA6
V6 LIMITER 12AU6
V7 DETECTOR-AVC DISCRIMINATOR 1/2 19T8
V8 35C5 POWER AMP
V7 1/2 19T8 AUDIO AMP
V6 12AU6
V2 6AB4
V1 6BU6
V4 12AU6
V5 12BA6
V8 35C5
V3 12AT7
V7 19T8
SEL RECT
R23
TP5
TP4
TP3
TP2
V1
C12
L5 L3
L9 V2 C5
C39 L10 L6 V3
L4 T1 L11
SPRING
FINISH
START
TURNS
IDLER PULLEY
40"
NOTE: BAND SWITCH IN PHONO POSITION VOLTAGES TAKEN IN FM POSITION.
UNLESS OTHERWISE NOTED
K=1,000 M=1,000,000
CAPACITORS MORE THAN 1 MMF
CAPACITORS LESS THAN 1 MF
105-120 V AC OR DC
FM ANTENNA (POWER CORD)
PHONO
TAPE
AM ANT
FM ANT
FM EXT. ANT TERM.
RS1337 AUDIO COUPLATE
RS1316 FM COUPLATE
RS 1189 AFC COUPLATE
RS1335 AM
BOTTOM T6
BOTTOM T1-2-3-4
BOTTOM

# GENERAL ELECTRIC COMPANY

## Models C-400A, C-401A

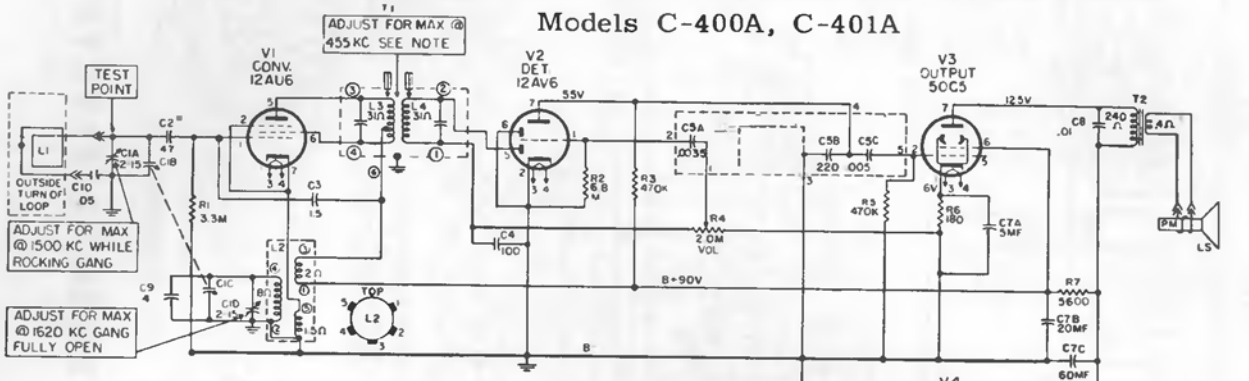


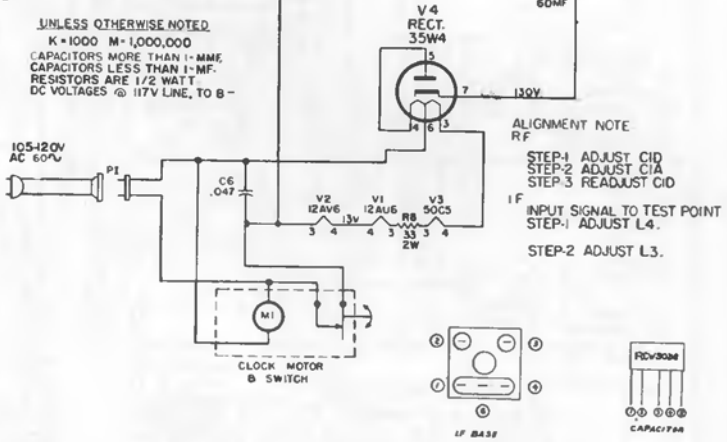


| CAT. NO. | SYMBOL | DESCRIPTION |
|---|---|---|
| | | CAPACITORS |
| RCE-217 | C7A,B,C | 5mf.,@25V.,20mf.,& 60mf.,@150V.,Electro..... |
| RCN-048 | C3 | 1.5mmf.,20%,500V.,Ceramic |
| | C6 | .047mf.,+40-10%,600V., Molded..... |
| RCT-097 | C1A,B C,D | Tuning Capacitor, Two Gang |
| RCW-3036 | C5A,B,C | .0035mf.,220mf.,.005mf. Bullplate..... |
| RCW-3079 | C4 | 100mmf.,20%,500V.,Ceramic |
| RCW-3209 | C9 | 4mmf.,±20%,500V.,Ceramic. |
| RS-1022 | | .01mf.,+40-10%,400V.Ceramic |
| | | POTENTIOMETERS |
| RS-1028 | R4 | Volume Control 2 meg..... |
| | | COILS & TRANSFORMERS |
| RLC-135 | L2 | Oscillator Coil C400..... |
| RS-1414 | L2 | Oscillator Coil C401..... |
| RS-1027 | T1 | I.F. Trans. C400-C401.... |
| RTO-176 | T2 | Output Trans. C400-C401.. |

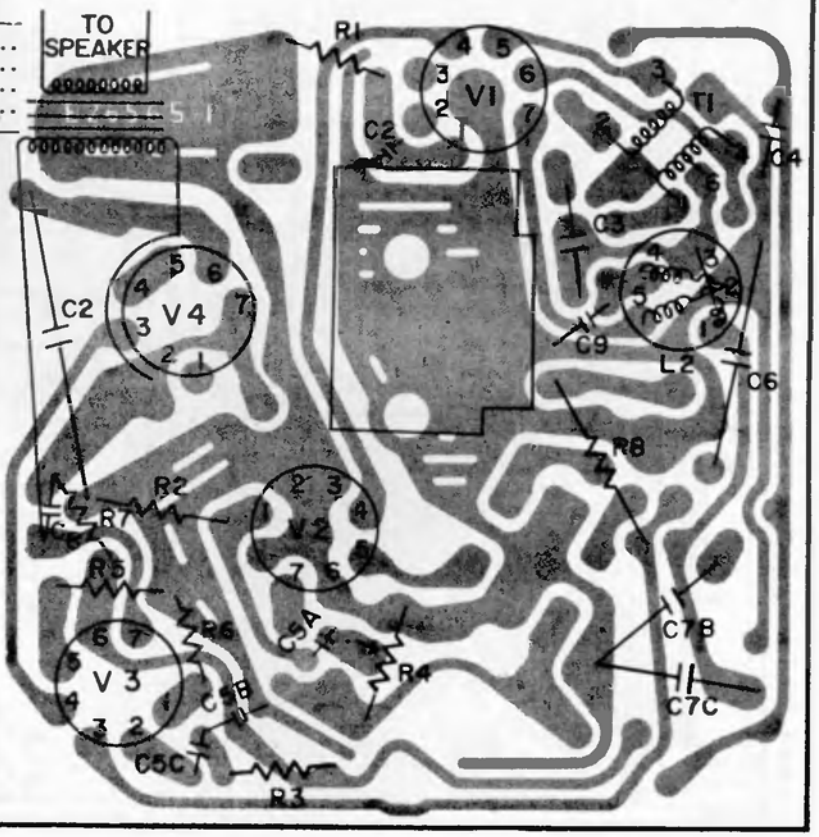


TO REMOVE CHASSIS FROM CABINET:

Remove cabinet back and interlock. Remove the five self-tapping screws (hex heads), one on each corner of the chassis, and the single hex screw just below the tuning gang capacitor. Pull off the volume control knob.

The tuning control knob is a captive knob which remains with the cabinet. The chassis must be pulled out of the cabinet and separated from the tuning knob simultaneously. When pulling out the chassis, first close the tuning capacitor, grasp the tuning capacitor with the thumb and forefinger of one hand and the tuning knob with the other and pull the chassis out of the cabinet.

CAUTION:

It is important to use extreme care while replacing parts and or soldering on this chassis. Too much heat on the chassis will cause the copper plating to become unbonded. Only apply the soldering iron long enough to melt the solder and pull out the part to be replaced. A 35 watt soldering iron is recommended.

# GENERAL ELECTRIC COMPANY

## Models C405A,B, C406A,B

### SPECIFICATIONS

| | |
|---|---|
| CABINET: | Model C405A,B--Gray and White<br>Model C406A,B--Pink |
| ELECTRICAL RATING: | 105-120 volts AC<br>30 Watts @117 Volts AC |
| OUTPUT: | Undistorted .9 Watts<br>Maximum 1.5 Watts |

### GENERAL INFORMATION

The main difference in the "A" and "B" versions of the C405 series of clock-radios is the oscillator-converter stage (V1). The "A" version uses a 12AU6 tube as V1 and the "B" version uses a 12BE6 as V1. The V1 stage for the "B" version is shown as a separate stage on the schematic.

The tuning knob is held to the cabinet and cannot be removed without first removing the chassis.

### SERVICE NOTE

Always use an isolation transformer when servicing or aligning this receiver to protect personnel and test equipment.

When aligning, keep the signal input low so the AVC will not affect the output.

### TO REMOVE CABINET FRONT

Remove the two screws located on each side of the cabinet back; unscrew the clock set knob; separate the cabinet front from the back. When separating the cabinet, the speaker leads must be unsoldered before complete separation of the cabinet can be accomplished. The speaker is mounted on the cabinet back with the radio chassis and clock mounted on the cabinet front.

### TO REMOVE CHASSIS

Remove the volume control knob. Take out the four hexhead screws, one on each corner of the chassis board and one hexhead screw below the tuning condenser. Unsolder the one wire to switch on the clock and one to the clock motor.

Close the tuning condenser C1, and with the thumb and forefinger grasp the condenser and pull. The chassis will separate from the tuning knob which is left attached to the cabinet front.

### TO REMOVE THE CLOCK

Separate the cabinet as described above. Unsolder the two leads, one from the switch to the circuit board and one from the clock motor to the circuit board. Remove the two screws holding the AC interlock to the cabinet. Remove the two clock knobs. Snap out the clock crystal starting from the left side. Then, remove the two nuts holding the clock to the cabinet and remove the clock.

### TROUBLESHOOTING

Excessive loudness when adjusting the volume level to minimum is caused by excessive capacity between terminals 2 and 3 of RCW-3207. The excessive capacity can be eliminated without replacing the couplate or by removing the circuit board in the following manner:

1. Clip off couplate lead #3.
2. Solder a 220 mmf. capacitor (Cat. No.RS-1203) across the two outside terminals of the volume control located on the component side of the chassis board.

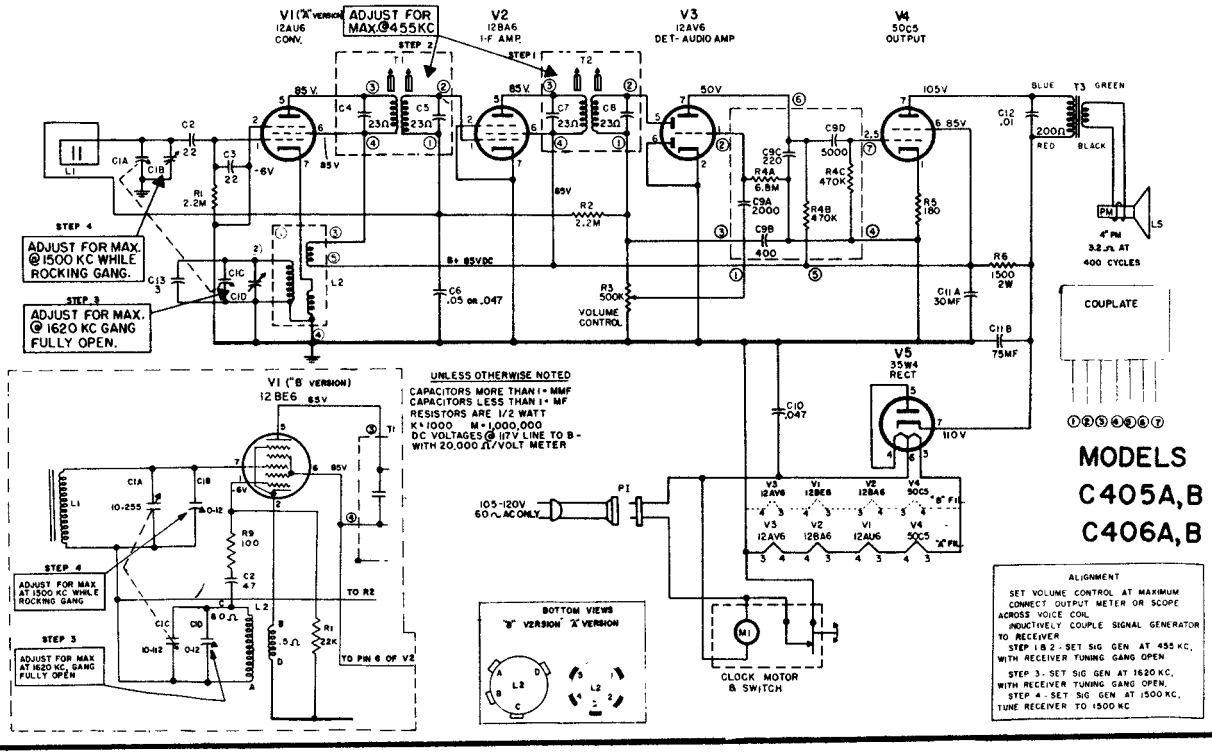

# GENERAL ELECTRIC COMPANY

## Model C435A

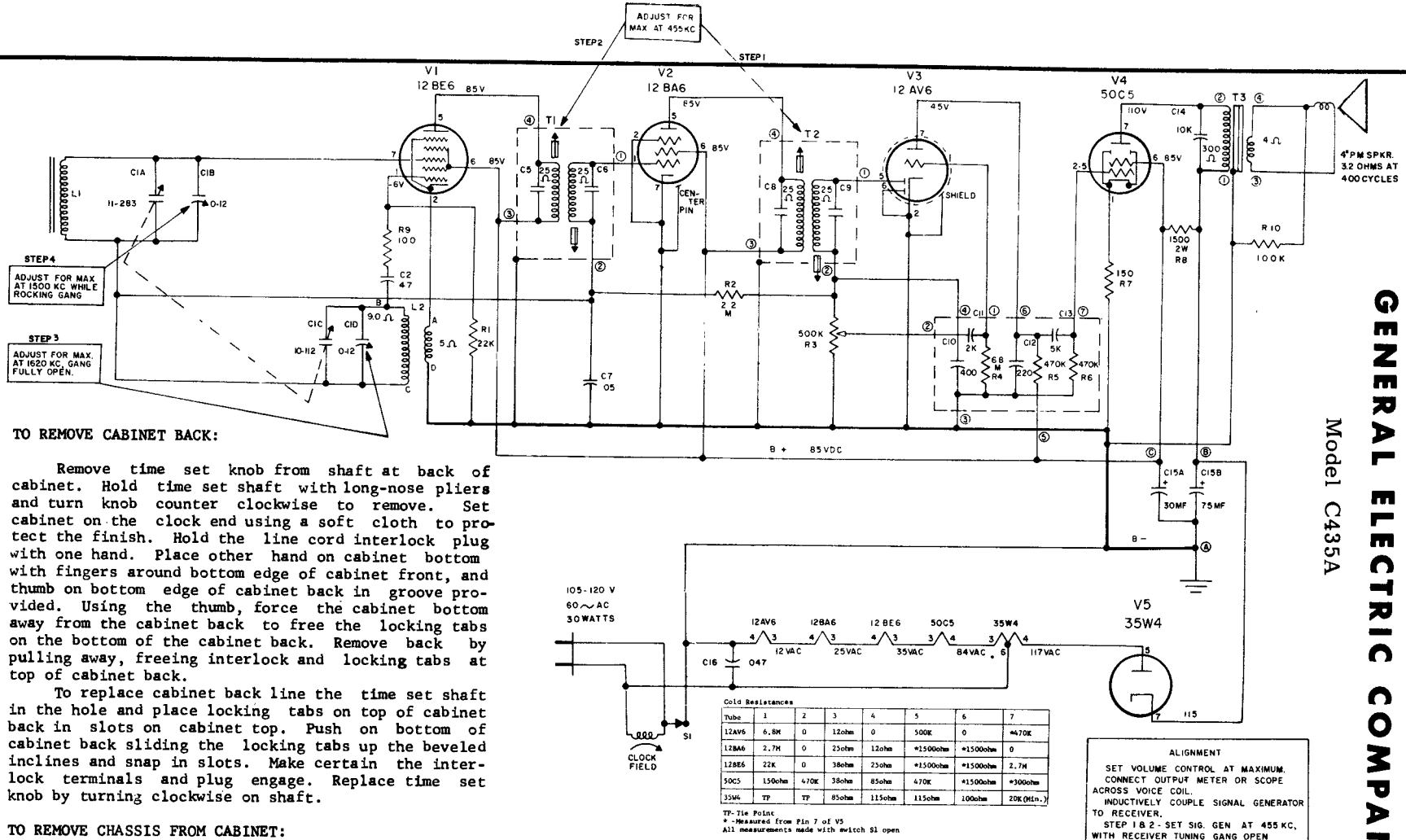


| Cold Resistances | | | | | | | |
|---|---|---|---|---|---|---|---|
| Tube | 1 | 2 | 3 | 4 | 5 | 6 | 7 |
| 12AV6 | 6.8M | 0 | 12ohm | 0 | 500K | 0 | *470K |
| 12BA6 | 2.7M | 0 | 25ohm | 12ohm | *2500ohm | *1500ohm | 0 |
| 12BE6 | 22K | 0 | 38ohm | 25ohm | *1500ohm | *1500ohm | 2.7M |
| 50C5 | 150ohm | 470K | 38ohm | 85ohm | 470K | *1500ohm | *300ohm |
| 35W4 | TP | TP | 85ohm | 115ohm | 115ohm | 100ohm | 20K(Min.) |

TP-Tie Point
* -Measured from Pin 7 of V5
All measurements made with switch S1 open

ALIGNMENT

SET VOLUME CONTROL AT MAXIMUM.
CONNECT OUTPUT METER OR SCOPE ACROSS VOICE COIL.
INDUCTIVELY COUPLE SIGNAL GENERATOR TO RECEIVER.
STEP 1 & 2 - SET SIG. GEN AT 455 KC, WITH RECEIVER TUNING GANG OPEN
STEP 3 - SET SIG GEN AT 1620 KC, WITH RECEIVER TUNING GANG OPEN.
STEP 4 - SET SIG GEN AT 1500 KC, TUNE RECEIVER TO 1500 KC

BOTTOM VIEWS

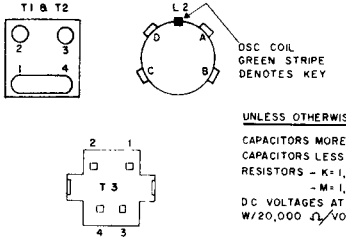


UNLESS OTHERWISE DENOTED
CAPACITORS MORE THAN 1=mmf
CAPACITORS LESS THAN 1=mf
RESISTORS - K=1,000
- M=1,000,000
DC VOLTAGES AT 117V LINE TO B- W/20,000 Ω/VOLT METER

### TO REMOVE CABINET BACK:

Remove time set knob from shaft at back of cabinet. Hold time set shaft with long-nose pliers and turn knob counter clockwise to remove. Set cabinet on the clock end using a soft cloth to protect the finish. Hold the line cord interlock plug with one hand. Place other hand on cabinet bottom with fingers around bottom edge of cabinet front, and thumb on bottom edge of cabinet back in groove provided. Using the thumb, force the cabinet bottom away from the cabinet back to free the locking tabs on the bottom of the cabinet back. Remove back by pulling away, freeing interlock and locking tabs at top of cabinet back.

To replace cabinet back line the time set shaft in the hole and place locking tabs on top of cabinet back in slots on cabinet top. Push on bottom of cabinet back sliding the locking tabs up the beveled inclines and snap in slots. Make certain the interlock terminals and plug engage. Replace time set knob by turning clockwise on shaft.

### TO REMOVE CHASSIS FROM CABINET:

After removing cabinet back remove the screw on the cabinet bottom that holds the chassis board support. The tuning knob is a captive knob and remains in the cabinet front. Close the tuning gang to prevent any possible damage to the plates. Slide one hand under the printed chassis board placing the fingers over the front edge. Slide the board back out of the grooves on either end simultaneously removing the tuning gang shaft from the tuning knob.

When replacing the chassis, close the tuning gang and line the flat side of the tuning gang shaft up with the flat in the tuning knob. Place the ends of the board in the grooves and push on the edge of the board, not on the components. The tuning shaft will enter the tuning knob and the front edge of the board will seat itself in the grooved bosses inside the cabinet front. Replace the board support and self-tapping screw.

### TO REMOVE VOLUME CONTROL:

The volume control is attached to the cabinet and may be removed by pulling the knob straight off and removing the palnut.

When replacing the volume control place the tab on the control in the groove provided.

### TO REMOVE SPEAKER:

After removing the chassis board remove four tubular speaker clips and lift the speaker out of the cabinet.

# GENERAL ELECTRIC COMPANY

## Models C440A and C441A

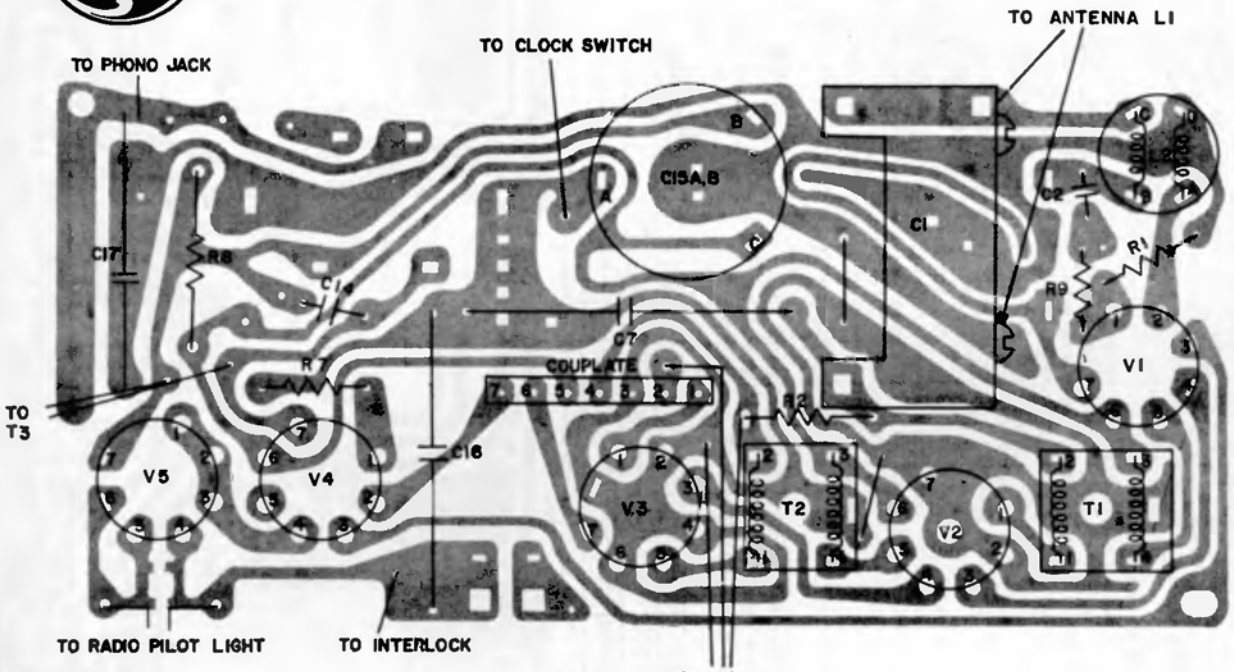


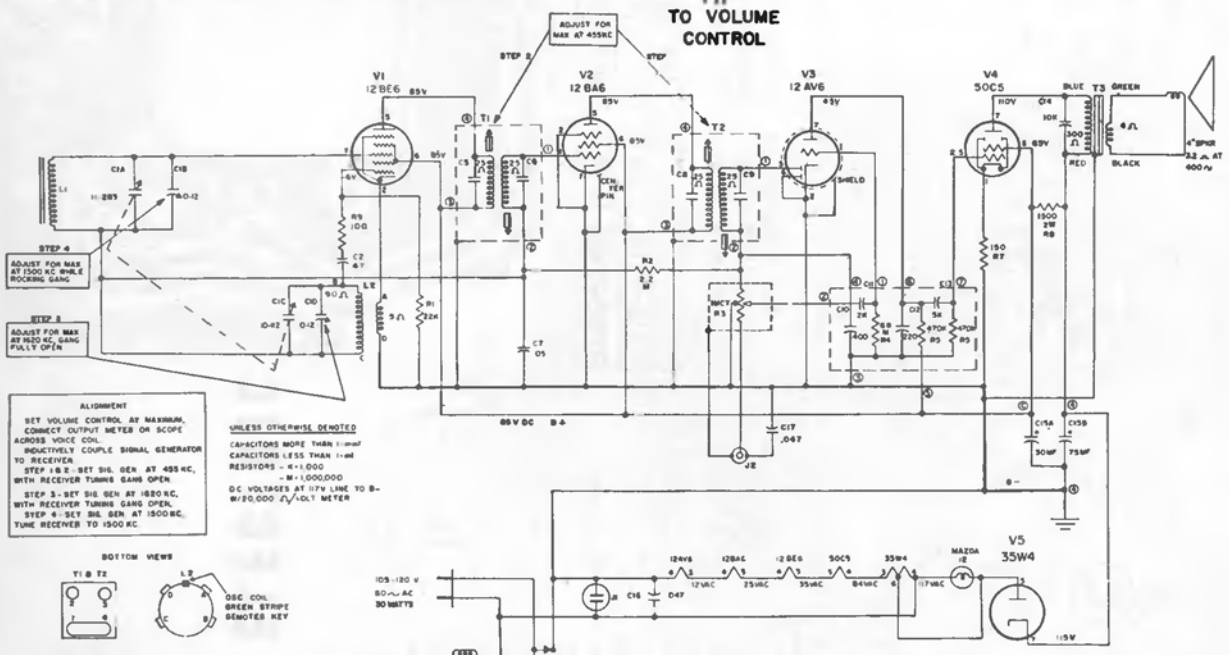


Tube Pin Resistance Chart

| Tube | 1 | 2 | 3 | 4 | 5 | 6 | 7 |
|---|---|---|---|---|---|---|---|
| 12AV6 | 6.8M | 0 | 15 | 0 | 500K | 0 | *470K |
| 12BA6 | 2.7M | 0 | 25 | 15 | *1500ohm | *1500ohm | 0 |
| 12BE6 | 22K | 0 | 35 | 25 | *1500ohm | *1500ohm | 2.7M |
| 50C5 | 150ohm | 470K | 35 | 80 | 470K | *1500ohm | *300ohm |
| 35W4 | TP | TP | 80 | 110 | 105 | 105 | 20K (min.) |

TP-Tie Point
* Measured from Pin 7 of V5
Resistances measured with pilot light(Mazda # 12) in socket
All measurements taken with respect to B- unless otherwise designated.

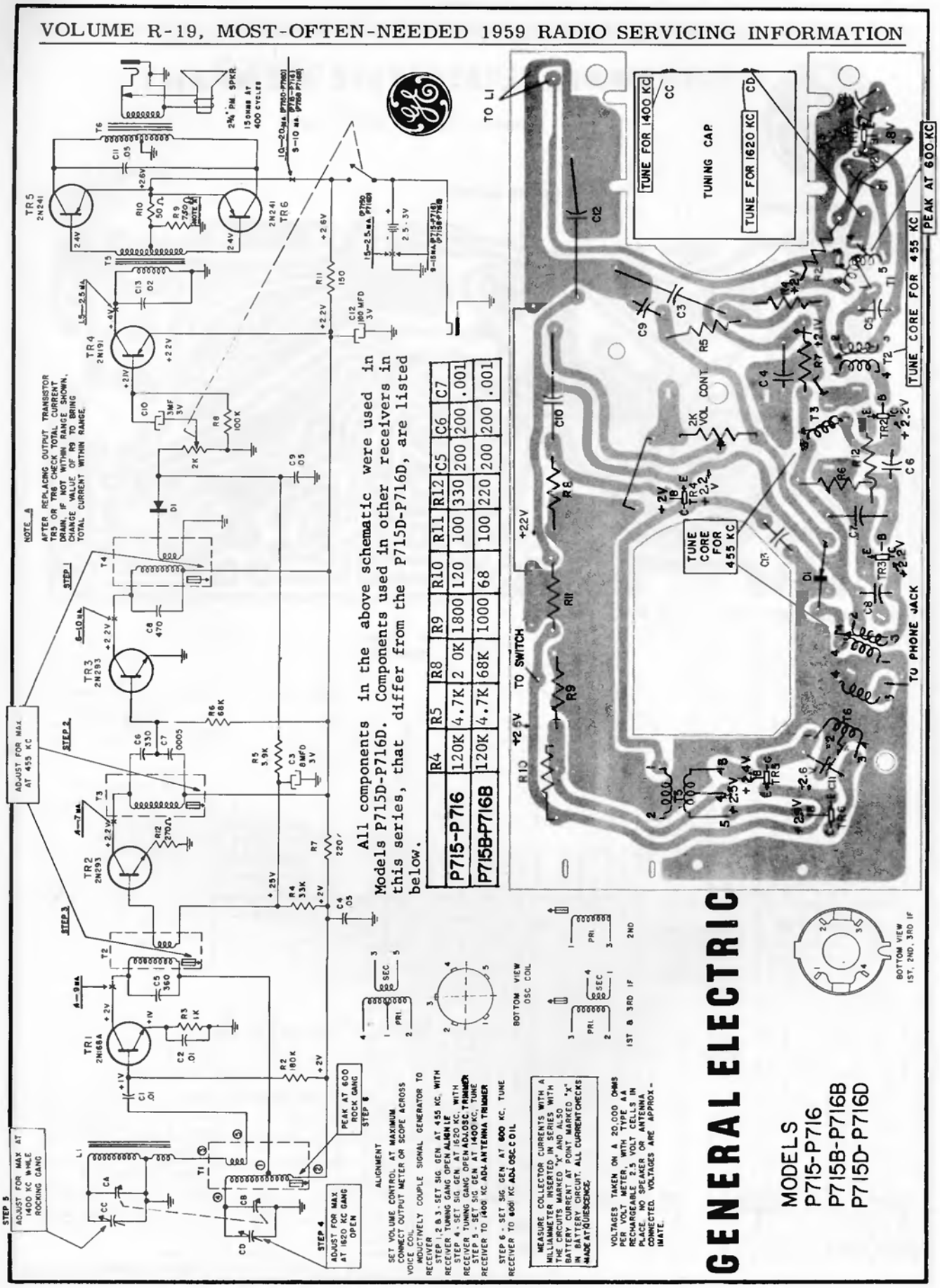


All components in the above schematic were used in Models P715D-P716D. Components used in other receivers in this series, that differ from the P715D-P716D, are listed below.

| | R4 | R5 | R8 | R9 | R10 | R11 | R12 | C5 | C6 | C7 |
|---|---|---|---|---|---|---|---|---|---|---|
| P715-P716 | 120K | 4.7K | 2.0K | 1800 | 120 | 100 | 330 | 200 | 200 | .001 |
| P715B-P716B | 120K | 4.7K | 68K | 1000 | 68 | 100 | 220 | 200 | 200 | .001 |

# GENERAL ELECTRIC

MODELS
P725B
P726B

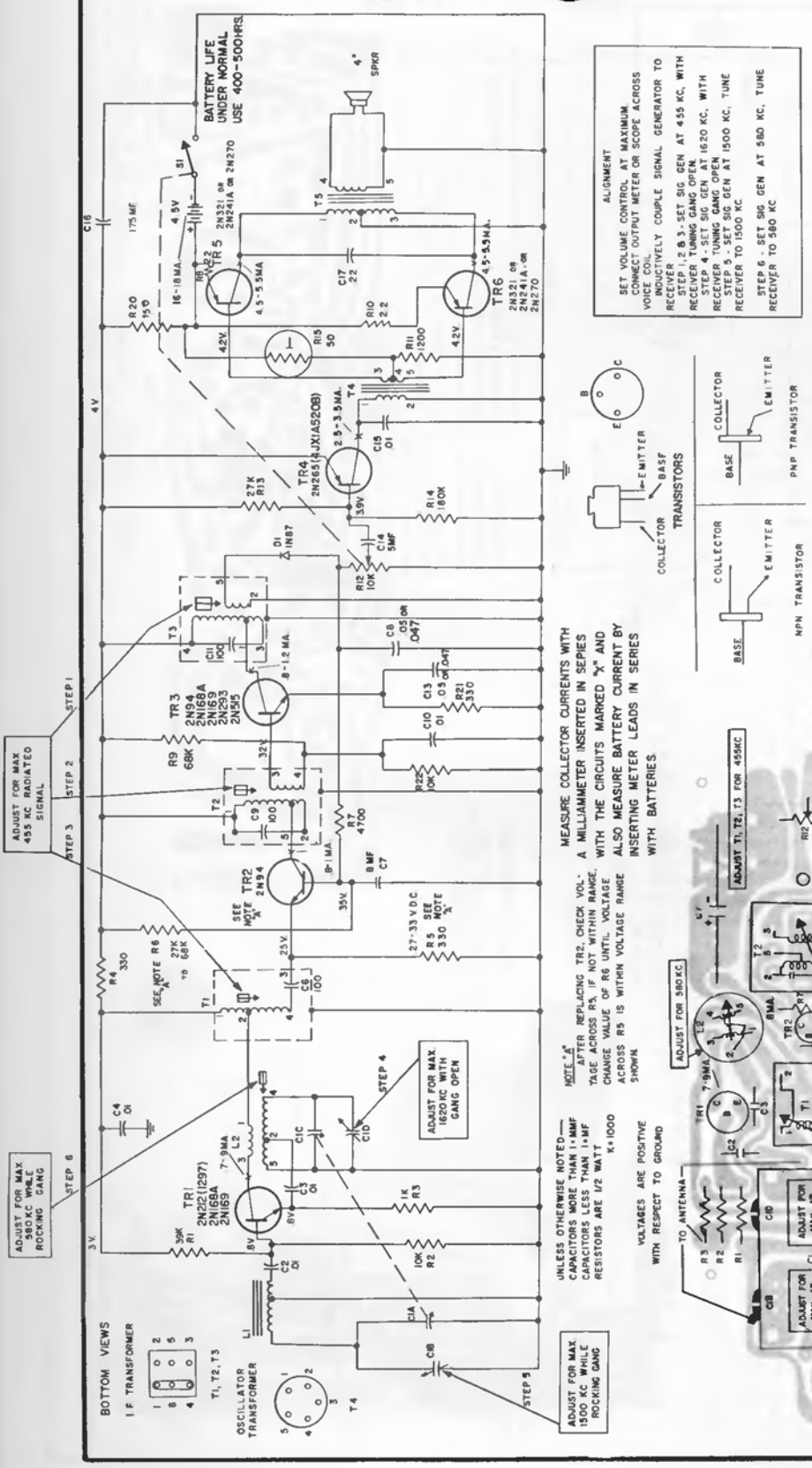


## TROUBLESHOOTING

A check of battery condition and total current drain of the receiver should be made first. All current measurements are made at quiescence with the receiver turned on, volume control at maximum, tuning gang closed, and with no signal conditions.

The total receiver current drain is 16 to 18 mils. This is measured by inserting a milliammeter in series with the batteries.

If an excessive total current drain is recorded, the individual collector currents of each transistor should be checked. An excessive current reading may mean a shorted transistor; no current will indicate that a transistor or associated circuit component is defective.

A single-edge razor blade is a satisfactory tool for cutting the copper circuit wiring so that a milliammeter can be inserted in series with the break to measure the current flow. After each current check is completed, solder the cut carefully to complete the circuit again.

# GENERAL ELECTRIC

MODELS
P735A
P736A

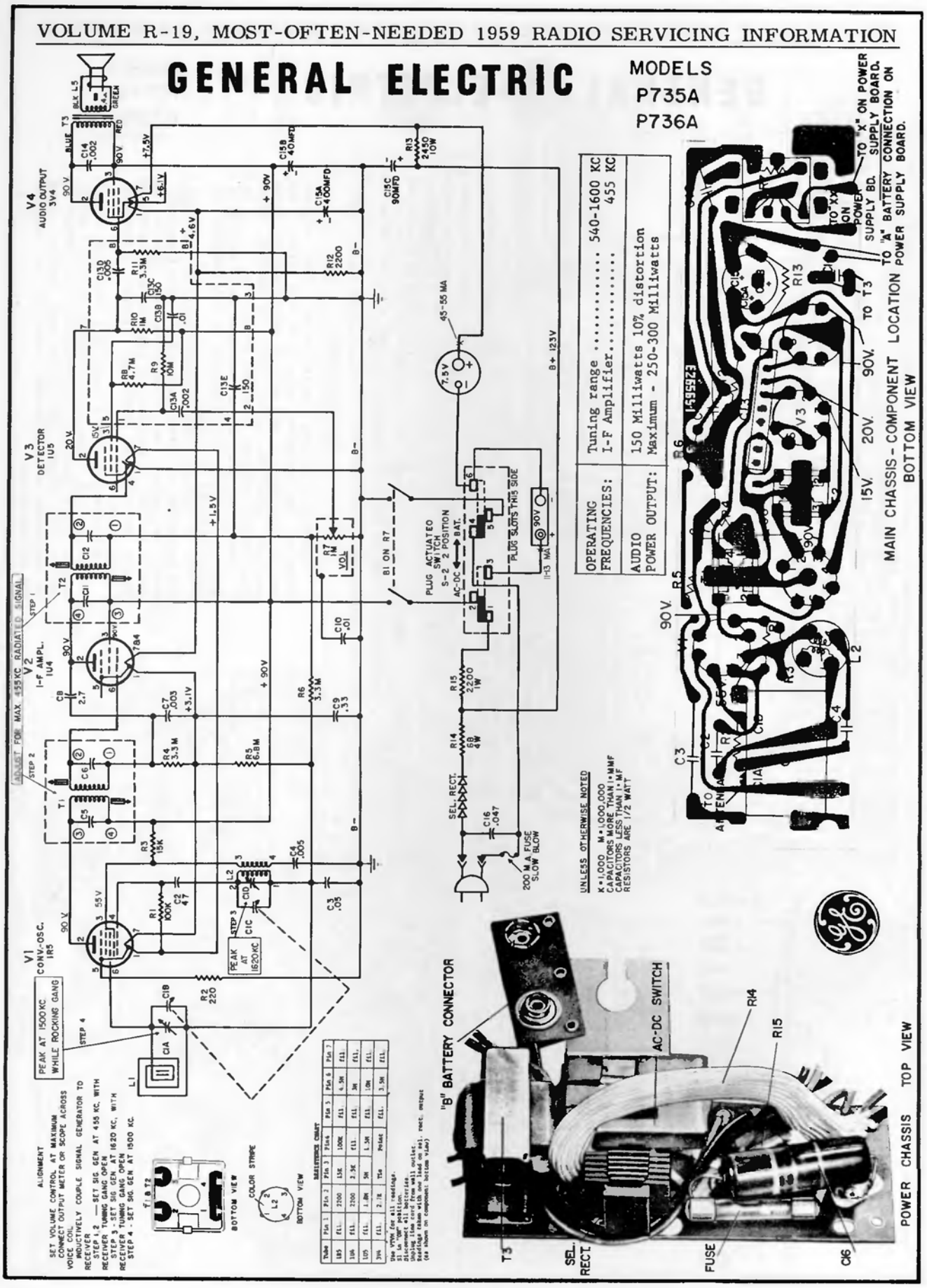

# GENERAL ELECTRIC

## Models P755A, P805, and P806

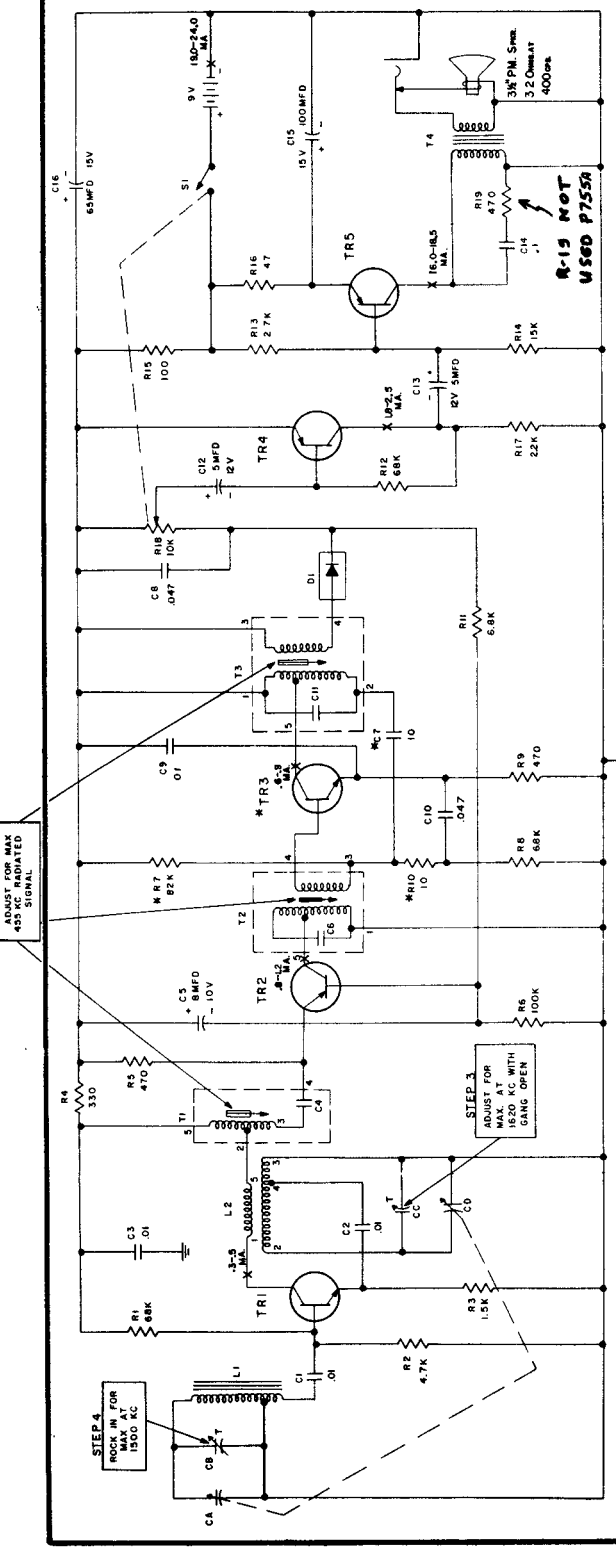


### TRANSISTOR CHART

| TR1* | TR2 | TR3 | TR4 | TR5 |
|---|---|---|---|---|
| 2N194A | 2N135 | 2N169 | 2N192 | 2N241A |
| 2N212 | | 2N233A | 2N324 | 2N270 |
| (1297) | | 2N293 | 2N406 | 2N321 |
| | | 2N314 | | 2N408 |

*When TR1 is 2N169, resistor R1 is 82K. When 2N212(1297) is used, R1 is 33K.

### TO REMOVE CIRCUIT BOARD

1. Remove screw from the cabinet back.
2. Insert a coin in either slot on the cabinet bottom and twist to remove the cabinet back.
3. Remove screw holding tuning dial.
4. Remove 3 screws under tuning dial to release tuning gang from cabinet front.
5. Remove 3 hexhead screws and one 11/32" nut (bottom center of circuit board) holding circuit board to bosses on cabinet front.
6. Fold tuning gang and circuit board out of cabinet front toward the volume control end. It is not necessary to remove volume control to repair the circuit board.

### TO REMOVE VOLUME CONTROL

1. Remove cabinet back.
2. Remove hex head screw from center of volume control knob.
3. Remove chassis.
4. Remove pal nut holding volume control to cabinet front boss.

### TO REMOVE SPEAKER

1. Remove cabinet back.
2. Remove chassis.
3. Unsolder speaker wires.
4. Remove clips holding speaker to cabinet front.

### TROUBLE SHOOTING

A check of battery current drain will indicate if a receiver is operating properly. To measure the current drain, remove cabinet back, unsnap ground section of battery terminal and swing away from battery. Connect milliammeter between battery terminal and battery contact.

The total current drain should be between 19.0 and 24.0 ma. The current drain is measured with no-signal-conditions (tuning gang closed) and volume control at maximum.

If an excessive current drain is recorded, the individual collector current readings should be checked on each transistor. Current drain is an important indication of the transistor operating conditions.

# GENERAL ELECTRIC COMPANY

## Models P671A,B, P672A,B, P673A,B, P674B

SPECIFICATIONS

| | |
|---|---|
| CABINETS: (Plastic) | Models P671A,B - Black and White<br>Models P672A,B - White and Terra Cotta<br>Models P673A,B - Turquoise and White<br>Model P674B - Green |
| ELECTRICAL RATING: | 105-120 Volts A-C (50 to 60 cycles) or DC<br>1 "A" battery — 7 1/2 volt Eveready No. 717 or equivalent<br>1 "B" Battery — 90 Volt Eveready No. 479 or equivalent |
| OPERATING FREQUENCIES: | Tuning range ..... 540-1600 KC<br>I-F ..... 455 KC |

CHASSIS REMOVAL:

The chassis is easily removed by means of the following procedure:

1. Swing down cabinet front by grasping front at top edge under handle.

2. Remove tuning and volume control knobs by pulling straight off their shafts.

3. Remove the two small Phillips-head screws from the top rear edge of the metal chassis mounting bracket.

4. Slide chassis and bracket out of cabinet.

5. Remove bracket from chassis by unscrewing the 1/4" mounting screw from the bracket.

The power supply chassis is removed from the cabinet by removing the four small hex-head mounting screws.

The speaker is mounted on the cabinet front and may be removed by taking off the four speaker mounting clips which secure the speaker to the four bosses on the inside of the cabinet front.

IMPORTANT: Use care when replacing defective parts. Apply as little heat to terminals and connections as possible to remove parts, as excessive heat will damage the plated wiring on the chassis boards.

When replacing knobs, do not force them on, as too much pressure may cause circuit board to bend and crack.

VOLUME CONTROL REPLACEMENT:

The chassis must first be removed from the cabinet as described under CHASSIS REMOVAL, then replace volume control as follows:

1. Cut off the three control lugs and the four on-off lugs.
2. Heat the remaining part of the lugs on the circuit board and pull out with long-nose pliers.
3. Clean all mounting holes of all excess solder.
4. The volume control on-off switch (catalog no. RRC-367) is used as the replacement. This control has a combined mounting bracket which can be mounted with the control on the circuit board. There are four holes on the board in which the mounting bracket can be inserted and soldered on the dip-soldered side of the circuit board.

TO REPLACE A TUBE SOCKET:

Cut the socket free by cutting all of the socket terminals at the chassis. One socket (V2) has a center terminal which must be unsoldered. Now, heat the pieces of terminals remaining in the board only enough so they may be pushed out. The new socket can now be inserted into the holes left by the old one and soldered into place.

BATTERY INSTALLATION:

Insert batteries in place as shown in the Tube and Battery location illustration. Make sure the battery connections are well seated.

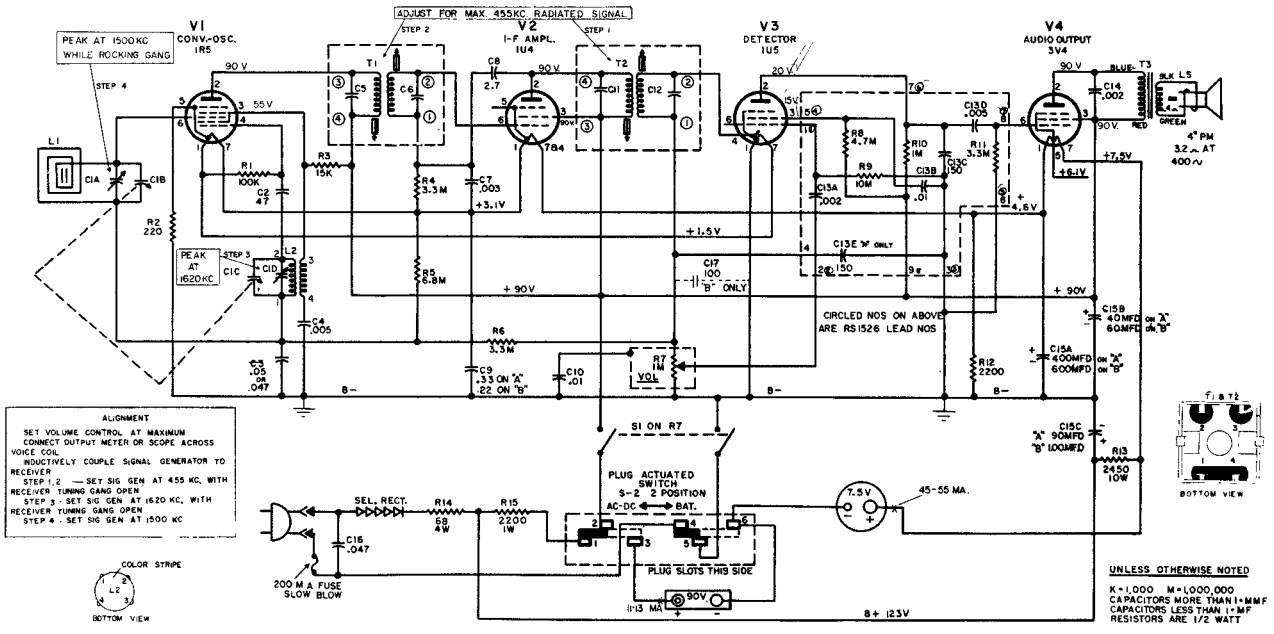

# GENERAL ELECTRIC COMPANY

## Model RP1110A

### SPECIFICATIONS

| | |
|---|---|
| ELECTRICAL RATING: | 105-120 Volts<br>60 Cycle AC 45 Watts |
| POWER OUTPUT: | Undistorted: 1.5 Watts<br>Maximum: 2 Watts |
| RECORD CHANGER: | Model CH10 four speed automatic with 90 Volt AC motor |
| PHONOGRAPH PICK-UP: | Dual Sapphire Stylus<br>Astatic 81T or equivalent |

### TROUBLESHOOTING

The tube filaments and changer motor are connected in series. An open filament in an amplifier tube will prevent the operation of the changer motor. Be sure the tubes are operating properly before troubleshooting changer.

The input AC voltage rating of the changer is 90 volts. When testing a changer disconnected from amplifier, a 100 ohm 10 watt resistor may be used as a substitute in place of tube filaments, or a variac set at 90 volts must be inserted between changer and power line. Do not plug changer into a 105-120 volt outlet.

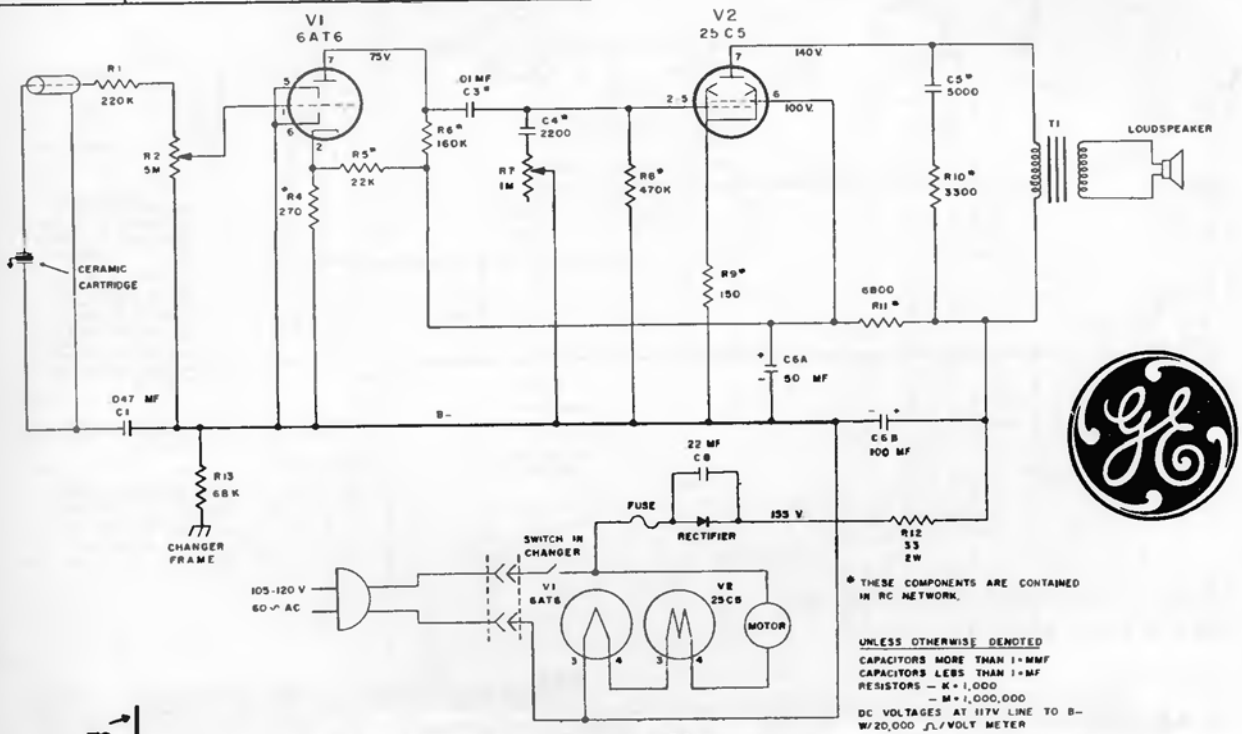


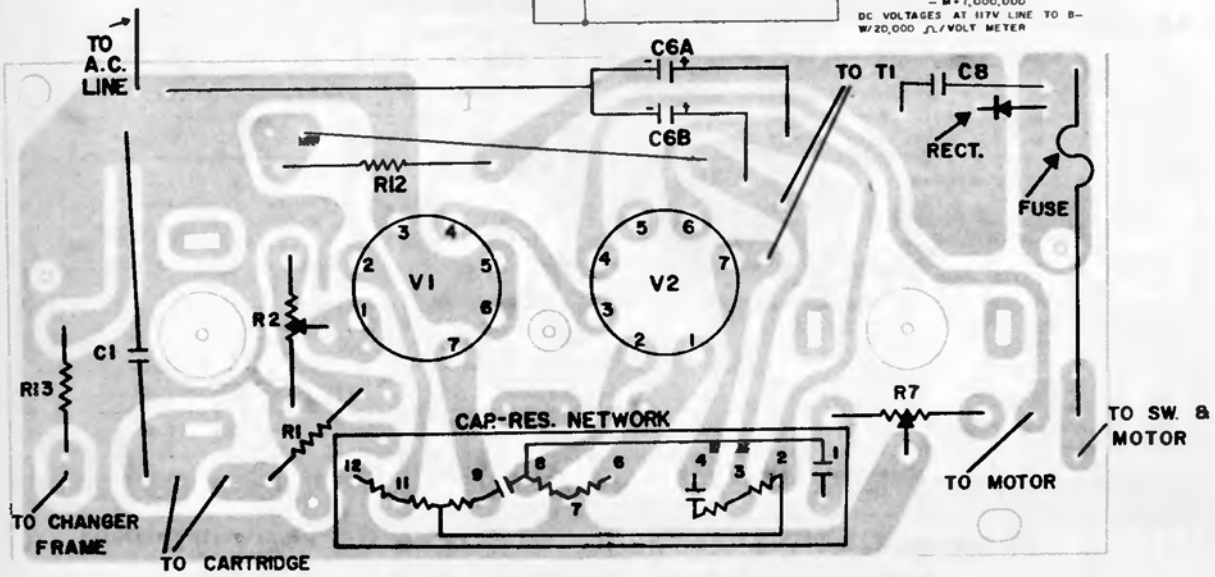


COMPONENT LOCATIONS - BOTTOM VIEW - RP-1110A

# GENERAL ELECTRIC COMPANY Models RP1120A, RP1120B

TO REPLACE TUBES

1. Open cabinet lid.
2. Remove screws holding vent panel board and interlock.
3. Remove vent panel board (interlock is automatically disconnected.)

TO REMOVE AMPLIFIER CHASSIS

1. Follow steps 1 through 3 as above.
2. Remove loudness and tone knobs.
3. Loosen screws on interlock bracket; slide interlock out of mounting slot. (Mark location of bracket on cabinet before removing so that bracket can be "keyed" to correct location when replacing.)
4. Remove the three hexhead nuts from screws on cabinet brace above speakers and the three hexhead nuts from screws on cabinet brace under speakers.
5. Lift out grille (with all electronic components) and place down in front of cabinet carefully.
6. Unscrew two clamps holding wires from chassis to changer.
7. Remove amplifier chassis by unscrewing the three screws holding chassis to grille.

Before replacing knobs, turn control shafts fully counterclockwise; press on knobs with the knob indicator dot to the left of center at the bottom.

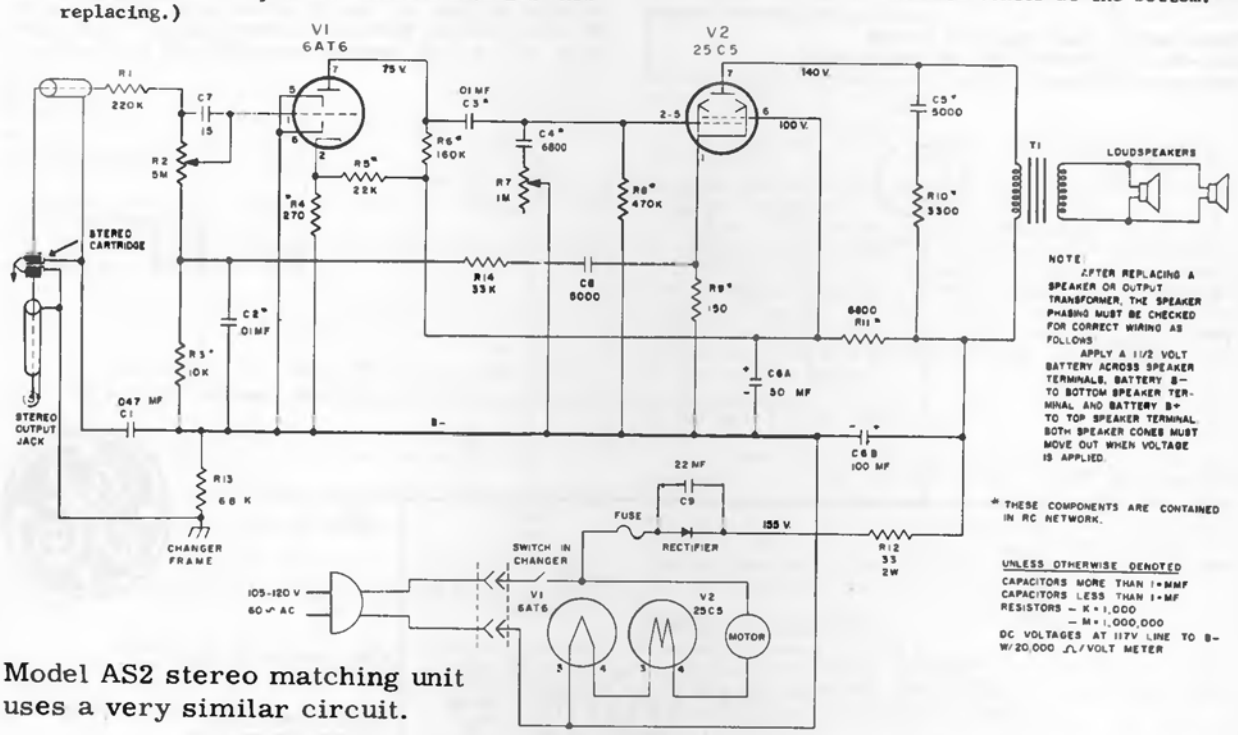


Model AS2 stereo matching unit uses a very similar circuit.

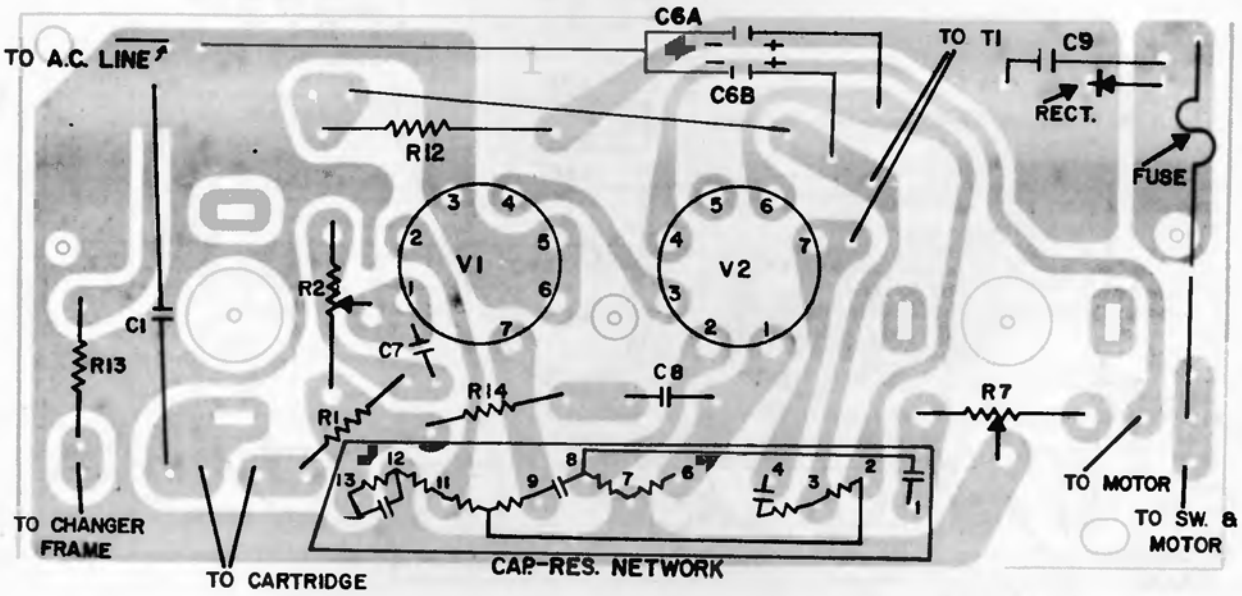


COMPONENT LOCATIONS - BOTTOM VIEW

# GENERAL ELECTRIC

RADIO/PHONO
MODEL
RP1160A

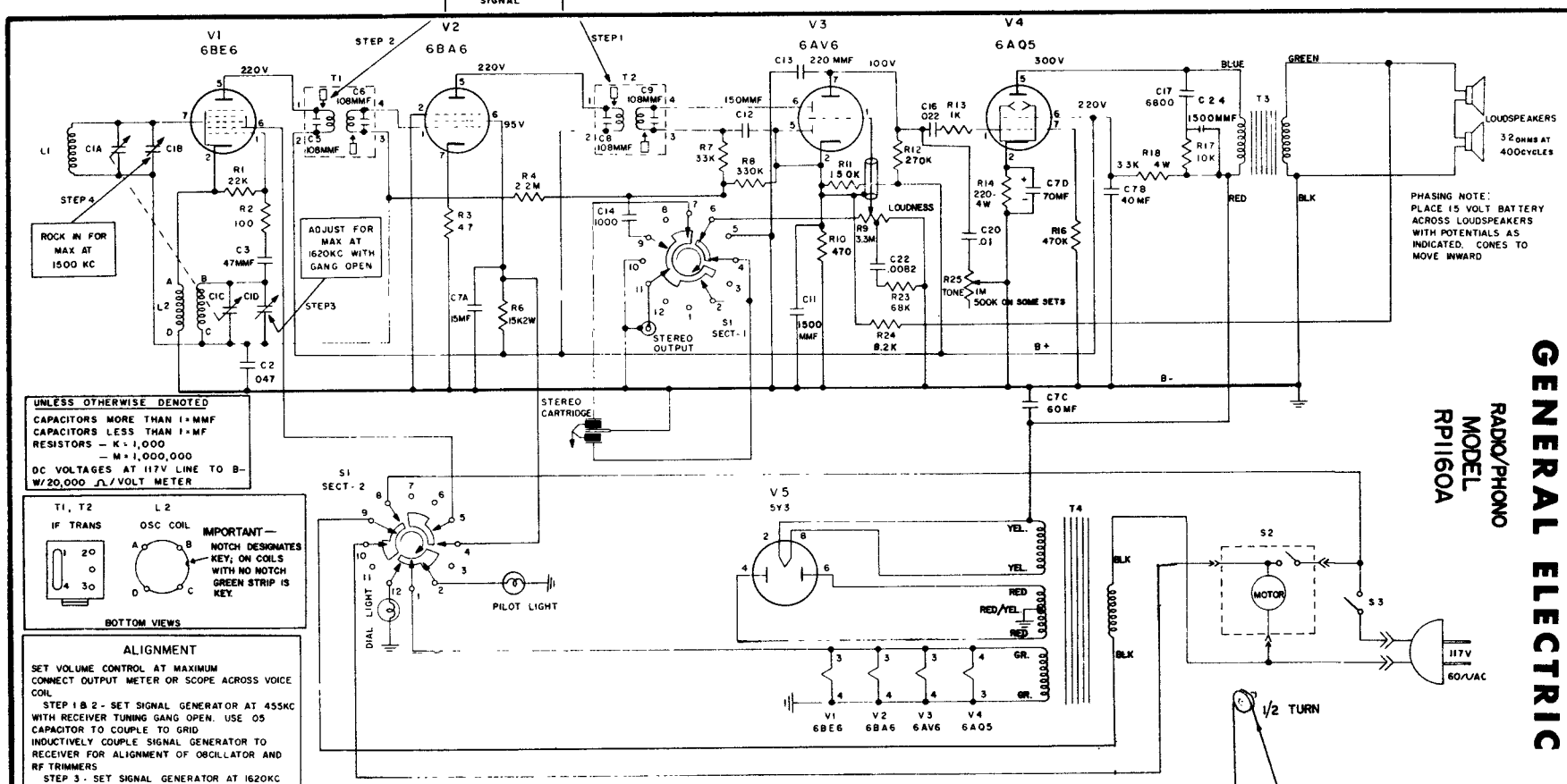


## TO REPLACE TUBES

1. Open cabinet lid.
2. Remove screws holding vent panel cover and interlock.
3. Remove vent panel cover (interlock is automatically disconnected.)

## TO REMOVE CHASSIS

1. Follow steps 1 through 3 as above.
2. Remove knobs.
3. Remove screws holding ventilated speaker compartment panel, remove panel.
4. Remove screws holding interlock connector.
5. Remove screws (holding grille bottom and chassis) from bottom of cabinet.
6. Remove grille by sliding out and down from bottom, be careful not to break speaker and antenna wires.
7. Remove compartment light from antenna bracket.
8. Remove antenna screws from brackets.
9. Remove screws from top and bottom of metal chassis front plate. (It is not necessary to remove plastic dial assembly from chassis front plate.)
10. Turn clips on bottom of the shipping screws parallel to the screws.
11. Lift record changer free of mounting board.
12. Remove screw holding electrolytic.
13. Disconnect plug.
14. Unsolder and label the shielded signal wires (that go to the Stereo-Mono-Radio switch) from the terminal board on bottom of changer.
15. Loosen nuts holding power transformer mounting plate and slide chassis, electrolytic, antenna and compartment light out the front.

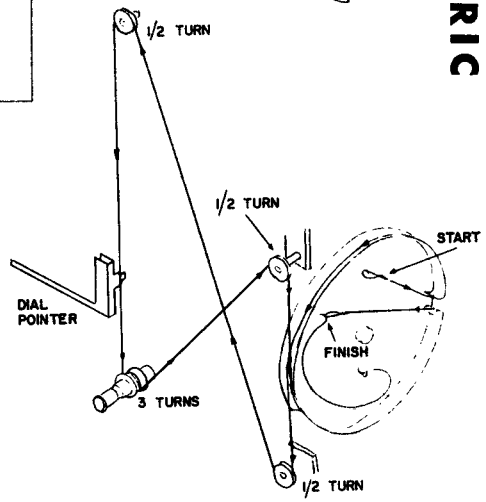


DIAL STRINGING DIAGRAM

# GENERAL ELECTRIC COMPANY

MODELS
RT1230A
RT1231A

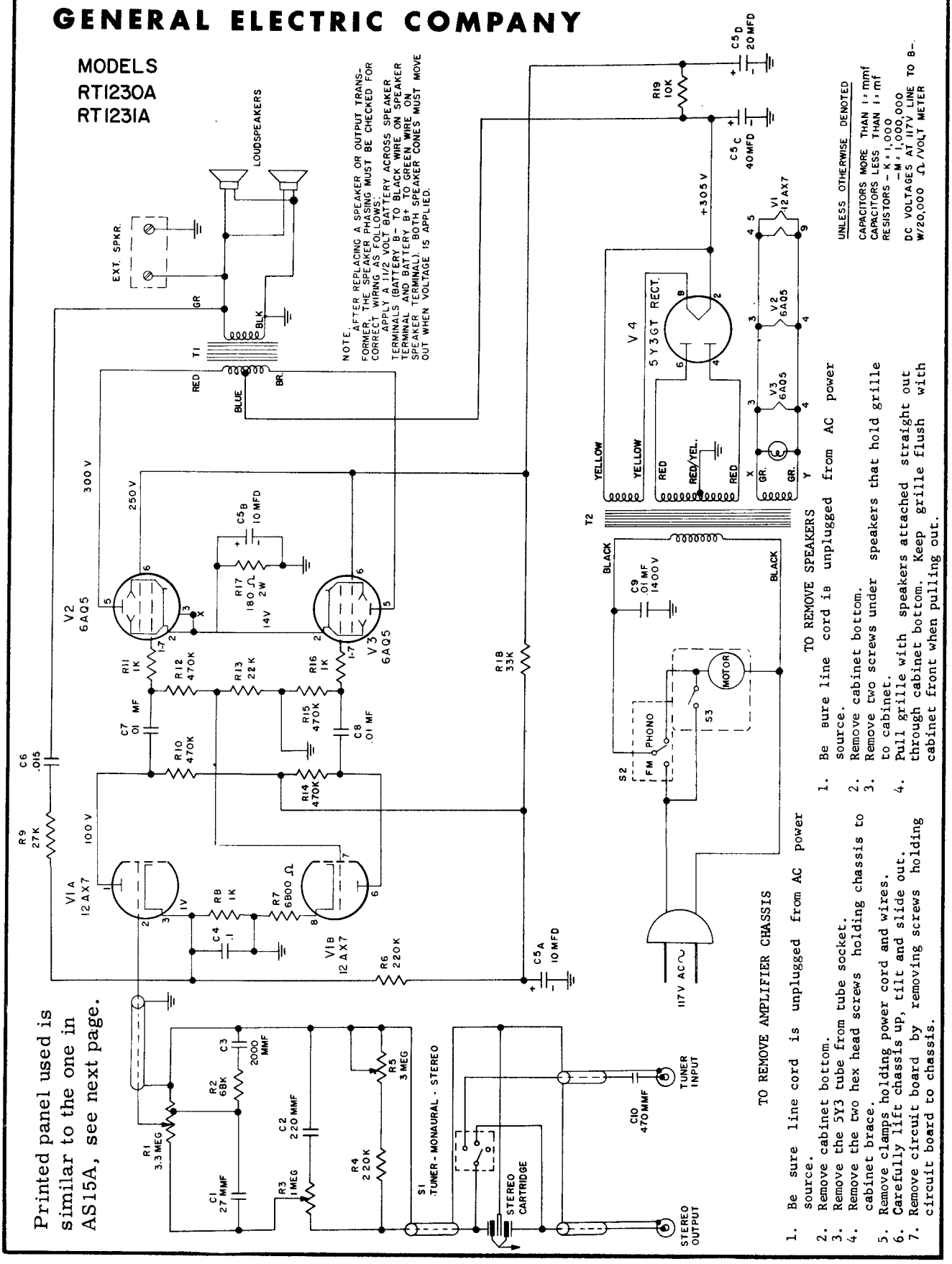


Printed panel used is similar to the one in AS15A, see next page.

TO REMOVE AMPLIFIER CHASSIS

1. Be sure line cord is unplugged from AC power source.
2. Remove cabinet bottom.
3. Remove the 5Y3 tube from tube socket.
4. Remove the two hex head screws holding chassis to cabinet brace.
5. Remove clamps holding power cord and wires.
6. Carefully lift chassis up, tilt and slide out.
7. Remove circuit board by removing screws holding circuit board to chassis.

TO REMOVE SPEAKERS

1. Be sure line cord is unplugged from AC power source.
2. Remove cabinet bottom.
3. Remove two screws under speakers that hold grille to cabinet.
4. Pull grille with speakers attached straight out through cabinet bottom. Keep grille flush with cabinet front when pulling out.

UNLESS OTHERWISE DENOTED
CAPACITORS MORE THAN 1 = mmf
CAPACITORS LESS THAN 1 = mf
RESISTORS – K = 1,000
– M = 1,000,000
DC VOLTAGES AT 117V LINE TO B–
W/20,000 Ω/VOLT METER

# GENERAL ELECTRIC

## Models AS15A and AS16A

SPECIFICATIONS

| | |
|---|---|
| CABINET: | AS15A - Mahogany<br>AS16A - Blond Oak |
| ELECTRICAL RATING: | 105-120 volts 60 cycles AC<br>75 watts |
| POWER OUTPUT: | Maximum 10 watts<br>10% Distortion 8 watts |

TO REMOVE CHASSIS FROM CABINET

1. Remove cabinet back.
2. Remove two screws holding chassis to cabinet.
3. Unscrew clamps holding connecting wires and remove screws holding electrolytic condenser and output transformer.
4. Pull pilot light holder off bracket.
5. Remove Chassis.

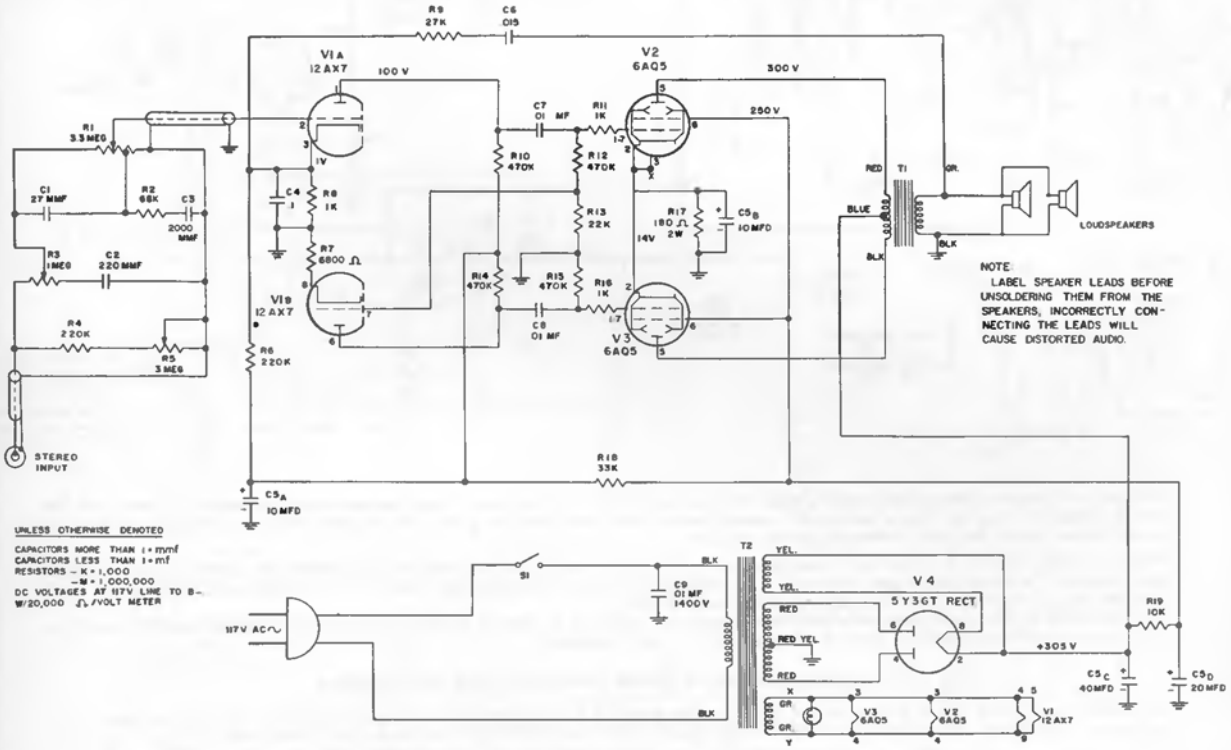


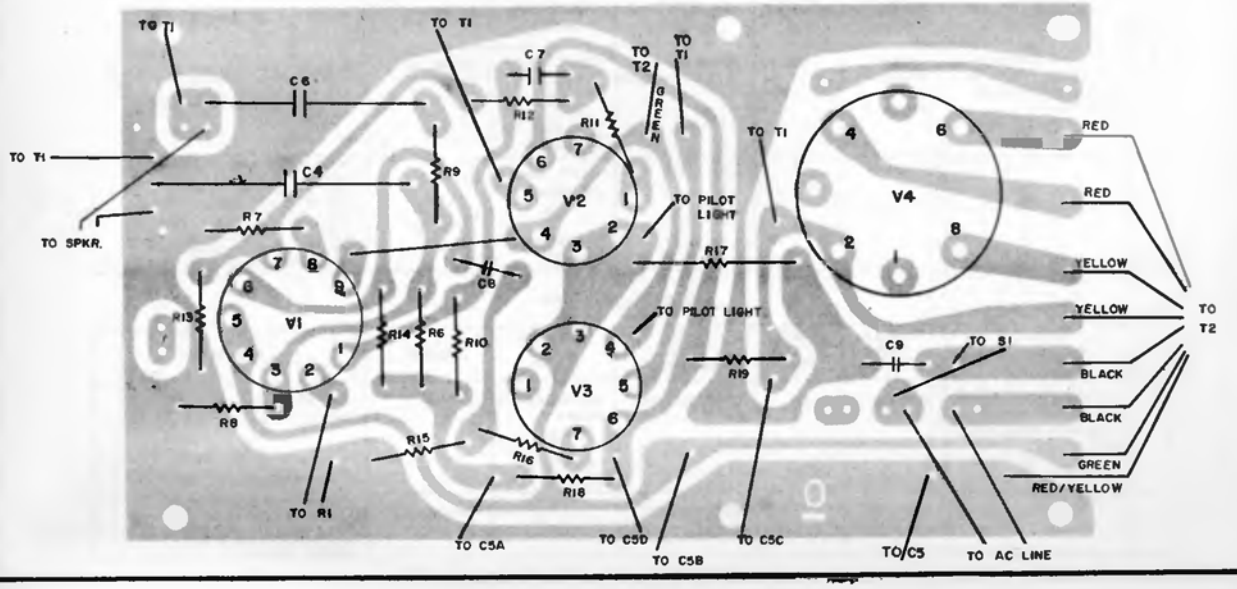

## GRANCO PRODUCTS INC. MODEL 601 FM RADIO

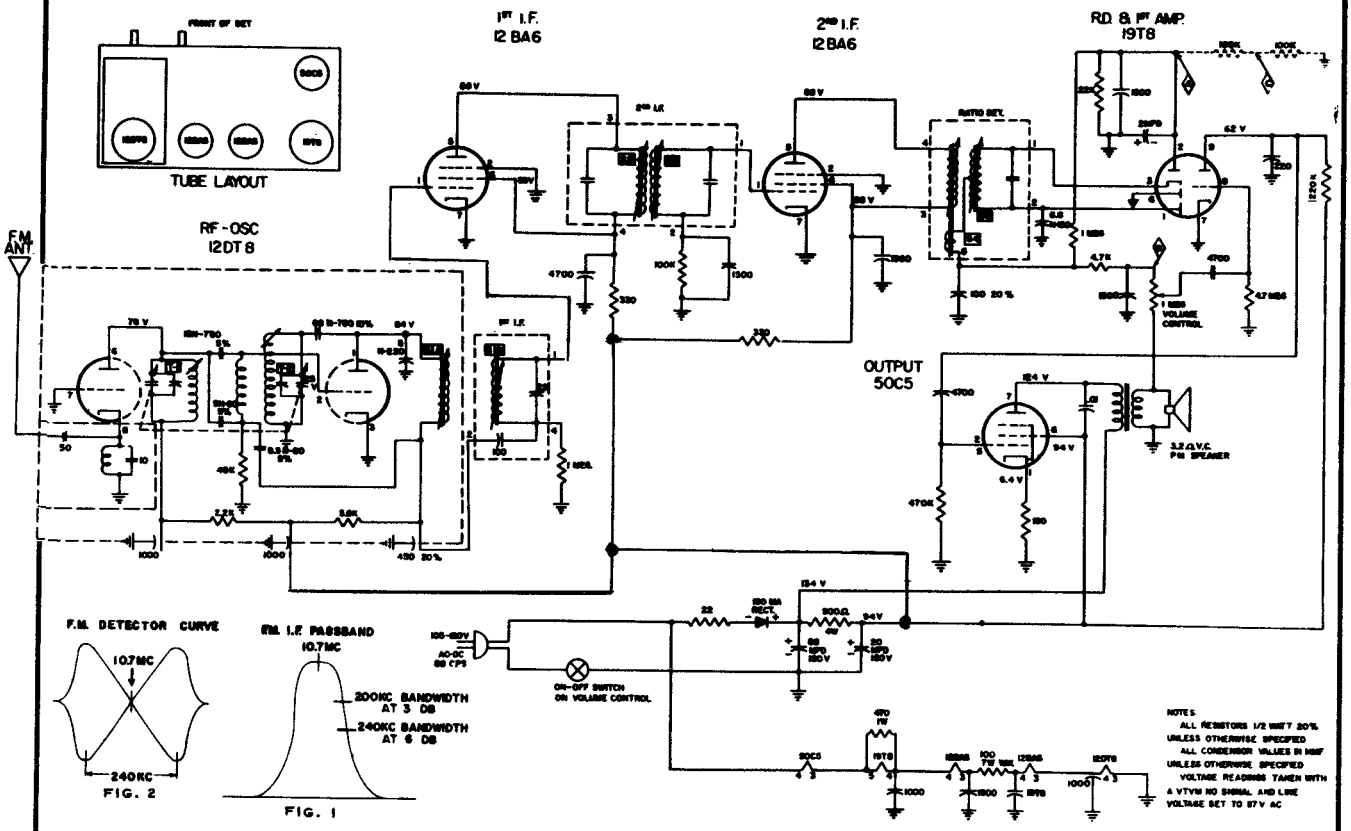


NOTE #1 – To remove chassis from cabinet, place receiver face down on flat surface. Remove bottom screw and proceed to remove rear portion of cabinet by slapping sides of cabinet with palm of hands and at same time lifting set. The chassis, which is mounted on the front portion of cabinet, should fall out. Proceed to service chassis.

NOTE #2 – This chassis is connected to one side of the power line. On AC operation an isolation transformer should be used to prevent shock hazard. To protect the signal generator, if no isolation transformer is available or if the radio is operated on DC, connect a 0.1 MFD capacitor between the high side of the signal generator and the radio.

The output of the signal generator should be no higher than necessary to obtain a usable output reading. Use a non-metallic type alignment screw-driver for adjustments. Connect signal generator ground to chassis.

### FM IF ALIGNMENT USING FM SIGNAL GENERATOR AND OSCILLOSCOPE

FREQUENCY MODULATE THE IF SIGNAL WITH A 60 CYCLE SINE WAVE TO A TOTAL DEVIATION OF 450 KC. ADJUST THE OSCILLOSCOPE INTERNAL HORIZONTAL DEFLECTION VOLTAGE TO 120 CYCLES, AND SYNCHRONIZE IT WITH THE 60 CYCLE SINE WAVE.

| | SIGNAL GENERATOR COUPLING | SIGNAL GEN. FREQ. | BAND SWITCH POS. | RADIO DIAL SETTING | CONNECT SCOPE | ADJUST | REMARKS |
|---|---|---|---|---|---|---|---|
| 6. | TO PIN 8 (CATHODE) OF 12DT8 THROUGH A 50 MMF (REMOTE ANT. HANK) | 10.7MC 450KC TOTAL DEV.) | FM | POINT OF NON-INTERFERENCE | VERT. AMP TO POINT Ⓐ LOW SIDE TO CHASSIS. | S4, S3, S2, S1B, S1A. | DISCONNECT STABILIZER CAPACITOR 2MFD. ADJUST FOR CURVE OF MAXIMUM AMPLITUDE AND SYMMETRY SIMILAR TO FIG. 1. |
| 7. | " | " | " | " | VERT. AMP TO POINT Ⓑ LOW SIDE TO CHASSIS. | S5 | RECONNECT STABILIZING CAPACITOR 2MFD. ADJUST SO THAT 10.7MC OCCURS AT CENTER OF CROSSOVER LINES, SIMILAR TO FIG. 2. SLIGHTLY RETOUCH S-4 FOR MAXIMUM AMPLITUDE AND STRAIGHTNESS OF CROSSOVER LINES, PROCEED WITH STEP 8. |

### FM RF ALIGNMENT

| | SIGNAL GENERATOR COUPLING | SIGNAL GEN. FREQ. | BAND SWITCH POS. | RADIO DIAL SETTING | CONNECT VTVM | ADJUST | REMARKS |
|---|---|---|---|---|---|---|---|
| 8. | TO PIN 8 (CATHODE) OF 12DT8 THROUGH A 50 MMF (REMOTE ANT. HANK) | 108MC | FM | 108MC (SLUGS OUT) | DC PROBE TO POINT Ⓐ COMMON TO CHASSIS. | T1, T2 | ADJUST FOR MAXIMUM DEFLECTION. |
| 9. | " | 88MC | " | 88MC (SLUGS IN) | " | PADDER FLAPS | MOVE PADDER FLAPS CLOSER OR FURTHER FROM OSC. & RF COILS FOR MAX. DEFLECTION. REPEAT STEPS 8 & 9 FOR HIGHEST READING. |

## GRANCO PRODUCTS INC. MODEL 701 FM-AM RADIO

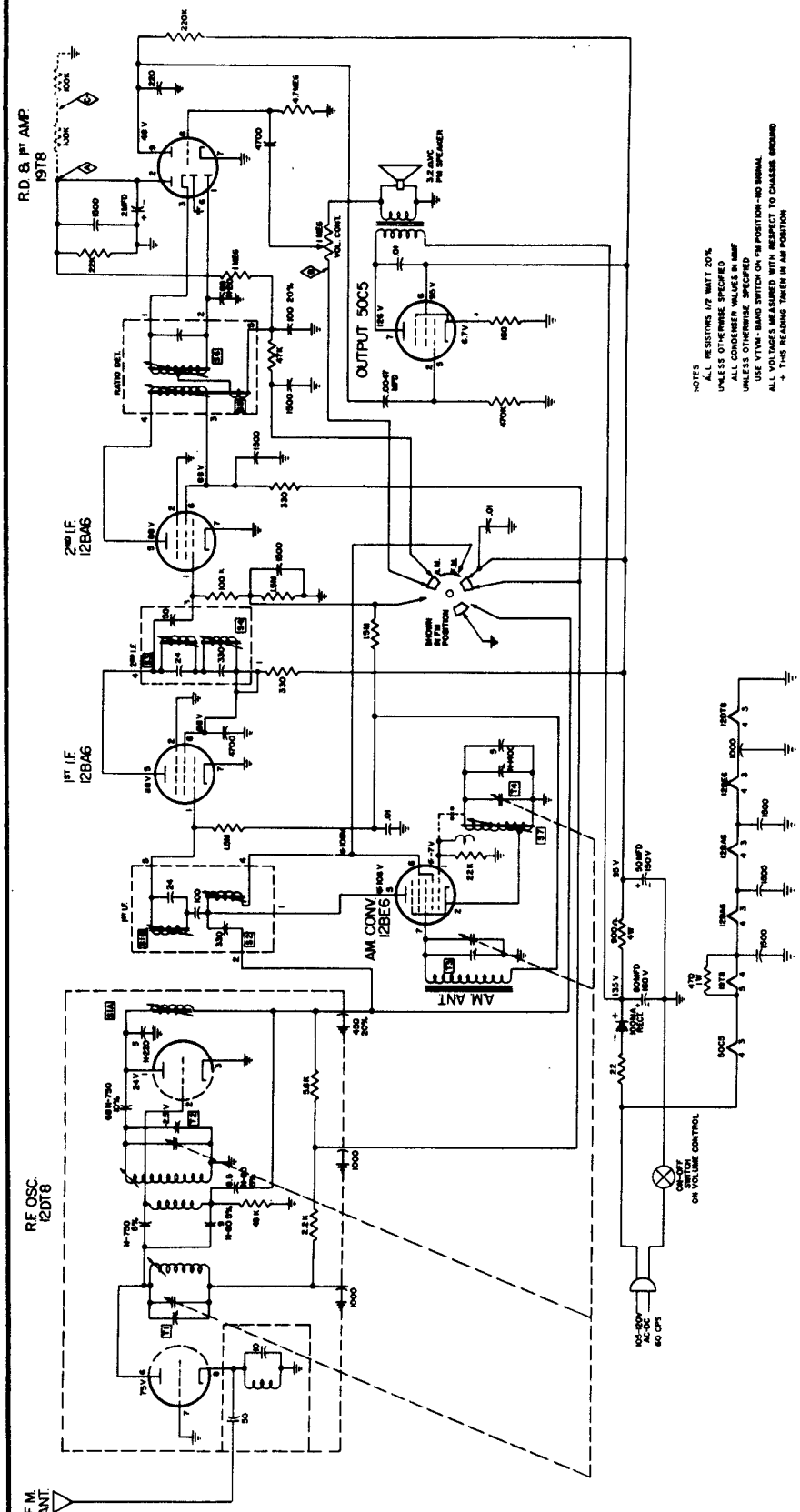


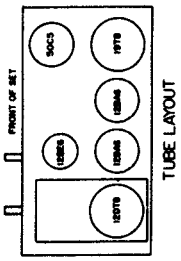


### AM IF & RF ALIGNMENT

| | SIGNAL GENERATOR COUPLING | SIGNAL GEN. FREQ. | BAND SWITCH POS. | RADIO DIAL SETTING | CONNECT VTVM | ADJUST | REMARKS |
|---|---|---|---|---|---|---|---|
| 1. | TO PIN 7 (GRID) OF 12BE6. | 455KC (400 MOD.) | AM | TUNING GANG FULLY OPEN. | ACROSS VOICE COIL | S4, S2 | ADJUST FOR MAXIMUM DEFLECTION. |
| 2. | LOOP (RADIATED) | 610KC | " | TUNE TO 610KC SIGNAL | " | S7 | ADJUST FOR MAXIMUM DEFLECTION. WHILE ROCKING TUNING GANG. |
| 3. | " | 1650KC | " | TUNING GANG FULLY OPEN. | " | T3, T4 | ADJUST FOR MAXIMUM DEFLECTION. REPEAT STEPS 1, 2, & 3. |

For FM alignment information see instruction under Model 601, on preceding page, which can be applied to this set as well.

## MONTGOMERY WARD & CO.
## MODELS GEN-1115A, GEN-1116A

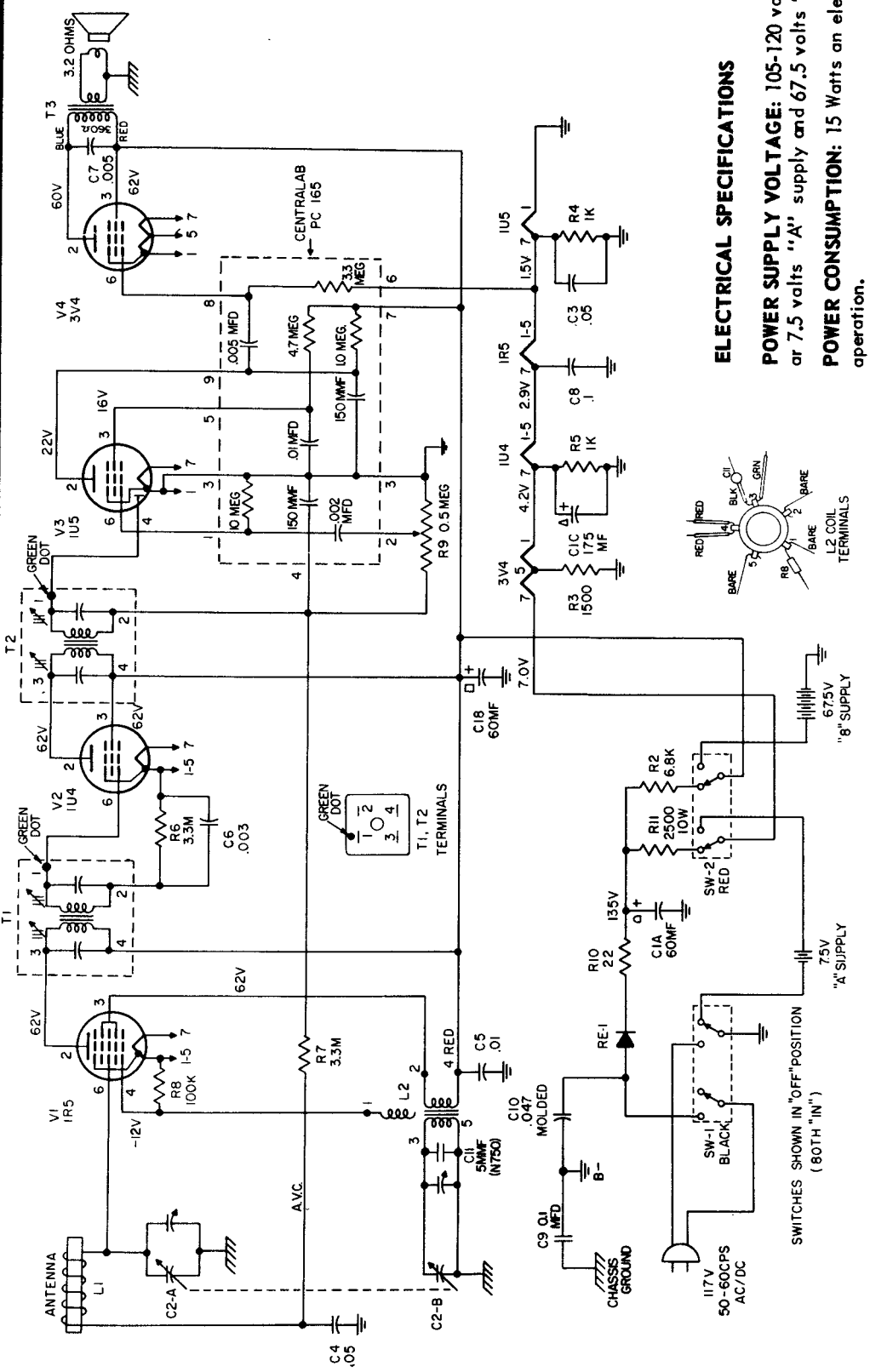


| | BLACK SW-1 | RED SW-2 |
|---|---|---|
| OFF | IN | IN |
| BATTERY | IN | OUT |
| AC/DC | OUT | IN |

### ELECTRICAL SPECIFICATIONS

**POWER SUPPLY VOLTAGE:** 105-120 volts AC/DC or 7.5 volts "A" supply and 67.5 volts "B" supply

**POWER CONSUMPTION:** 15 Watts on electrical operation.

**BATTERY DRAIN:** 50 MA at 7.5 V and 12 MA at 67.5 V.

**TUNING RANGE:** 540 KC–1620 KC

**I.F. STAGE:** 455 KC

**LOUDSPEAKER:** 4" PM

**VOICE COIL IMPEDANCE:** 3.2 ohms at 400 CPS

MONTGOMERY WARD & CO.

Model 1120A, -B

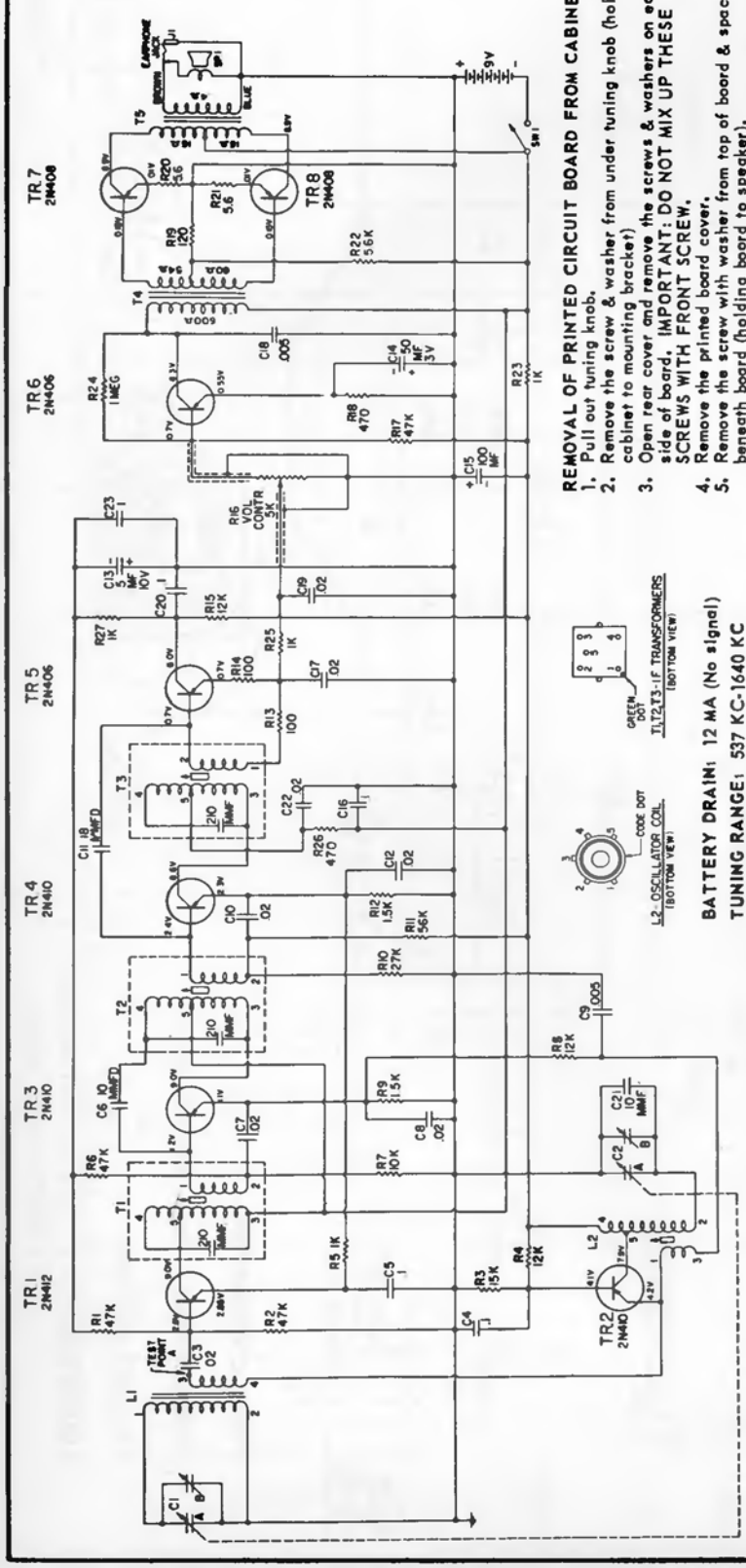


**REMOVAL OF PRINTED CIRCUIT BOARD FROM CABINET**

1. Pull out tuning knob.
2. Remove the screw & washer from under tuning knob (holding cabinet to mounting bracket)
3. Open rear cover and remove the screws & washers on each side of board. IMPORTANT: DO NOT MIX UP THESE SCREWS WITH FRONT SCREW.
4. Remove the printed board cover.
5. Remove the screw with washer from top of board & spacer beneath board (holding board to speaker).
6. Lift the printed board out of cabinet.
7. Unsolder speaker leads, if servicing requires removal of board from cabinet.

**BATTERY DRAIN:** 12 MA (No signal)

**TUNING RANGE:** 537 KC-1640 KC

**I. F. STAGES:** 455 KC

NOTES
1. VOLTAGES SHOWN AT EACH TRANSISTOR ELECTRODE (12V.) MEASURED TO COMMON GROUND WITH A 12V. BATTERY. NO INPUT SIGNAL AND VOLUME CONTROL SET AT MAXIMUM.
2. ALL CAPACITANCE VALUES ARE IN MICROFARADS UNLESS OTHERWISE INDICATED.
3. ALL RESISTANCE VALUES ARE IN OHMS, 1/2 W.

**TOP VIEW OF BOARD SHOWING ALIGNMENT ADJUSTMENT LOCATIONS.**

1) Ist I.F.
2) OSC. COIL
3) TRIM. C1B
4) TRIM. C2B
5) 2nd I.F.
6) 3rd I.F.

## MONTGOMERY WARD & CO.
### Model GEN-1628A

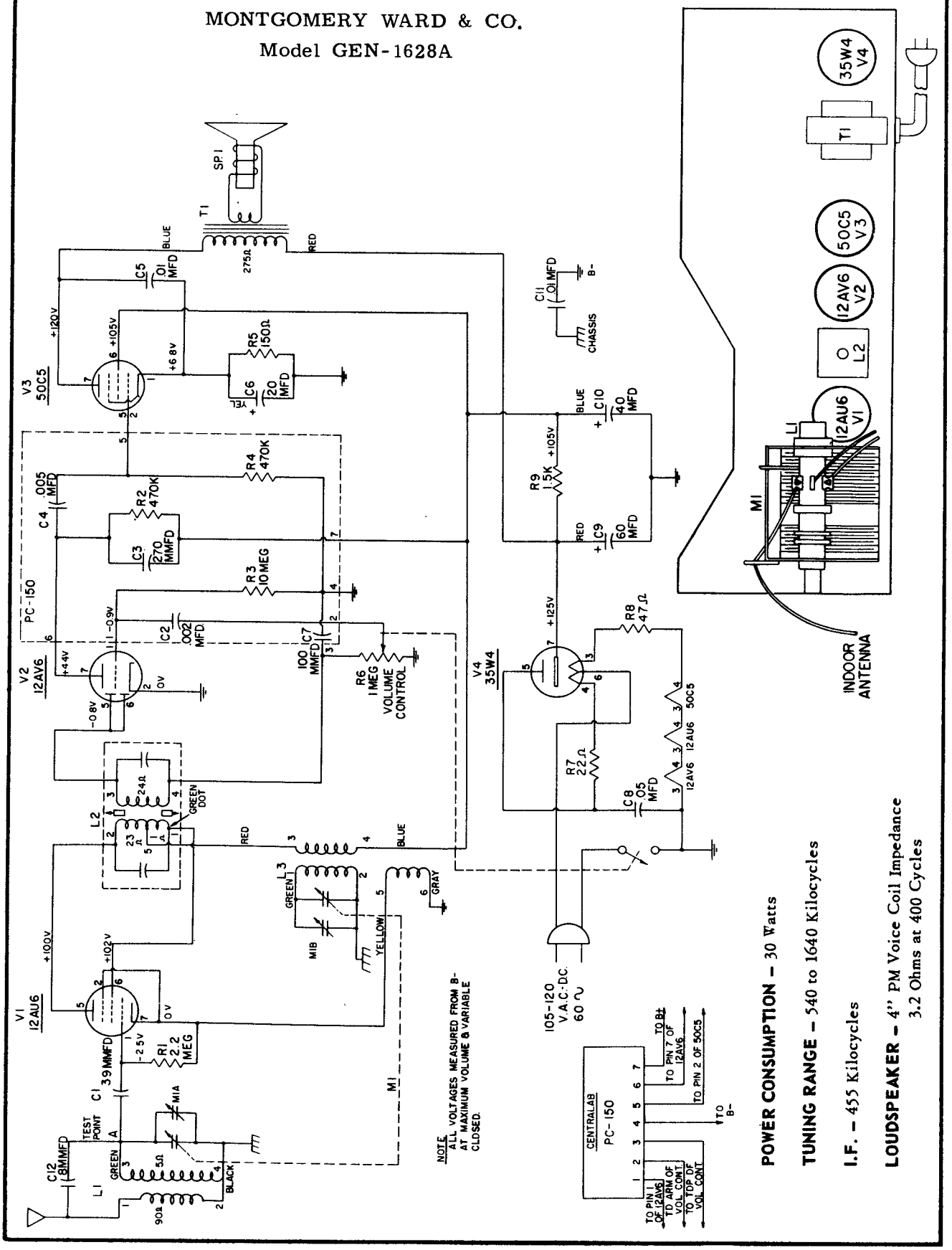


**POWER CONSUMPTION** – 30 Watts

**TUNING RANGE** – 540 to 1640 Kilocycles

**I.F.** – 455 Kilocycles

**LOUDSPEAKER** – 4" PM Voice Coil Impedance 3.2 Ohms at 400 Cycles

# MOTOROLA

## AUTO RADIO

## MODEL 9AX

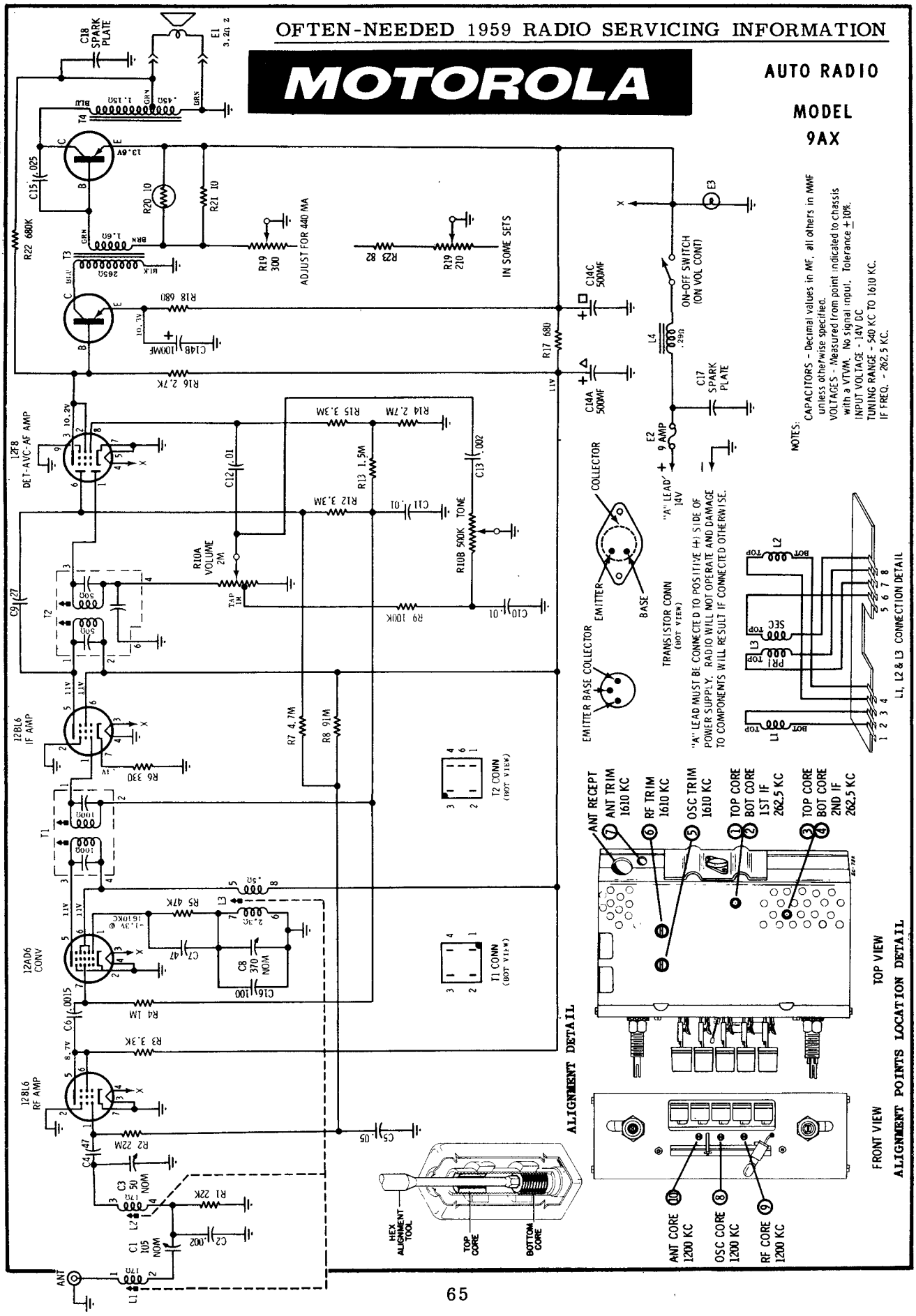

# MOTOROLA

## Model CTA9X

Models BKA9X, OEA9X, PCA9X, are electrically very similar to CTA9X covered on this page.

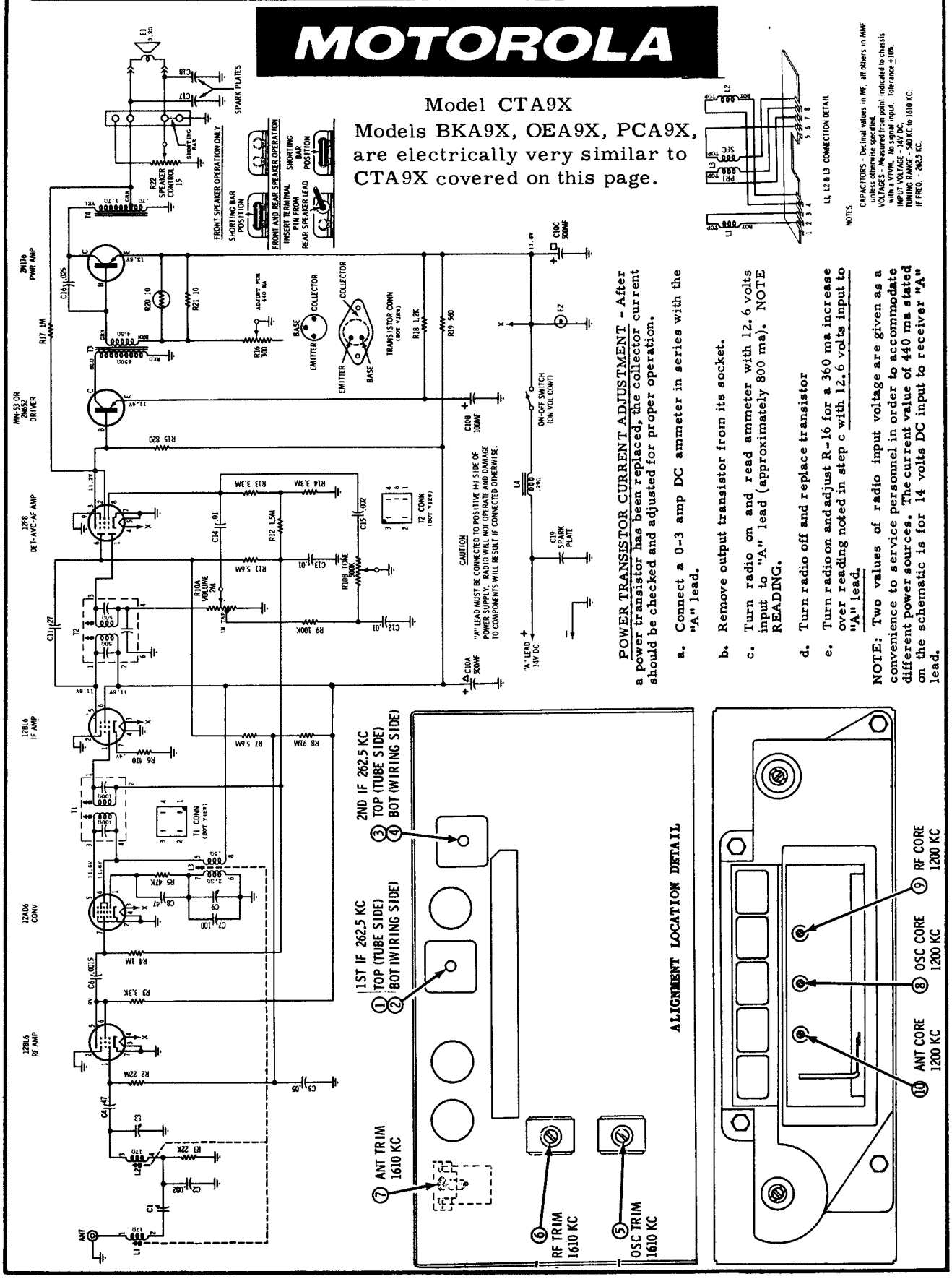


**POWER TRANSISTOR CURRENT ADJUSTMENT** - After a power transistor has been replaced, the collector current should be checked and adjusted for proper operation.

a. Connect a 0-3 amp DC ammeter in series with the "A" lead.

b. Remove output transistor from its socket.

c. Turn radio on and read ammeter with 12.6 volts input to "A" lead (approximately 800 ma). NOTE READING.

d. Turn radio off and replace transistor

e. Turn radio on and adjust R-16 for a 360 ma increase over reading noted in step c with 12.6 volts input to "A" lead.

**NOTE:** Two values of radio input voltage are given as a convenience to service personnel in order to accommodate different power sources. The current value of 440 ma stated on the schematic is for 14 volts DC input to receiver "A" lead.

# MOTOROLA

## MODEL CTM9X

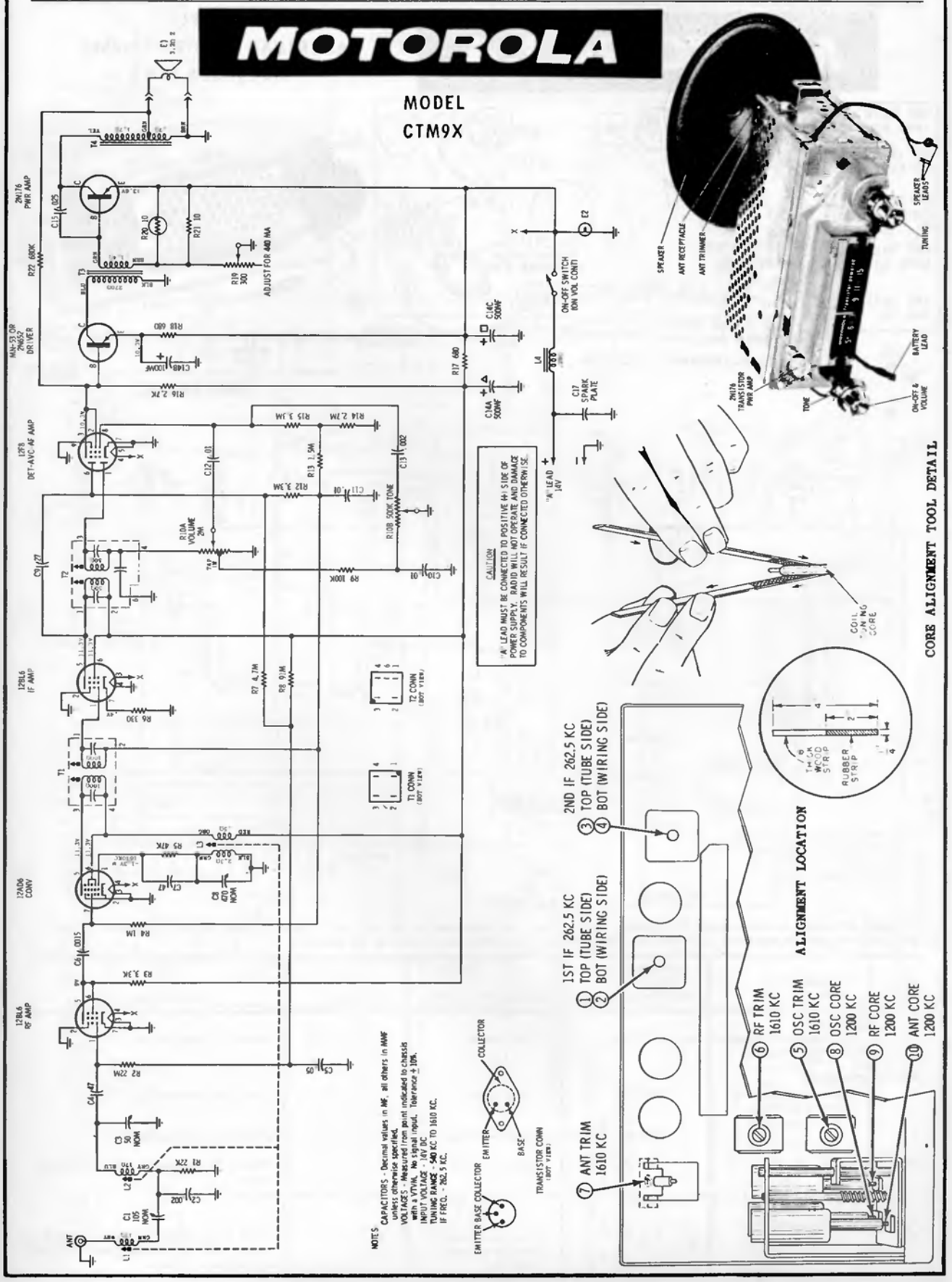








**CORE ALIGNMENT TOOL DETAIL**







**ALIGNMENT LOCATION**

# MOTOROLA

MODEL
AMERICAN MOTORS 8990582
MOTOROLA 93MR

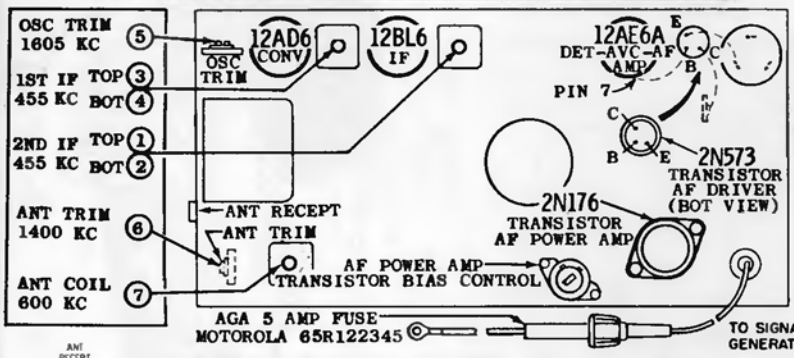


ALIGNMENT ADJUSTMENTS LOCATION

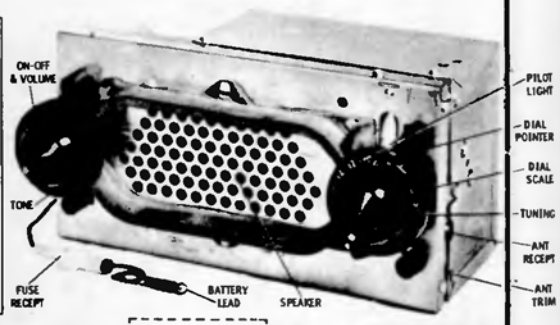


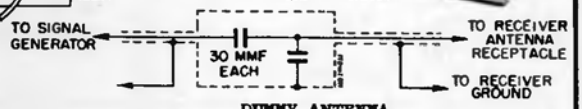


DUMMY ANTENNA

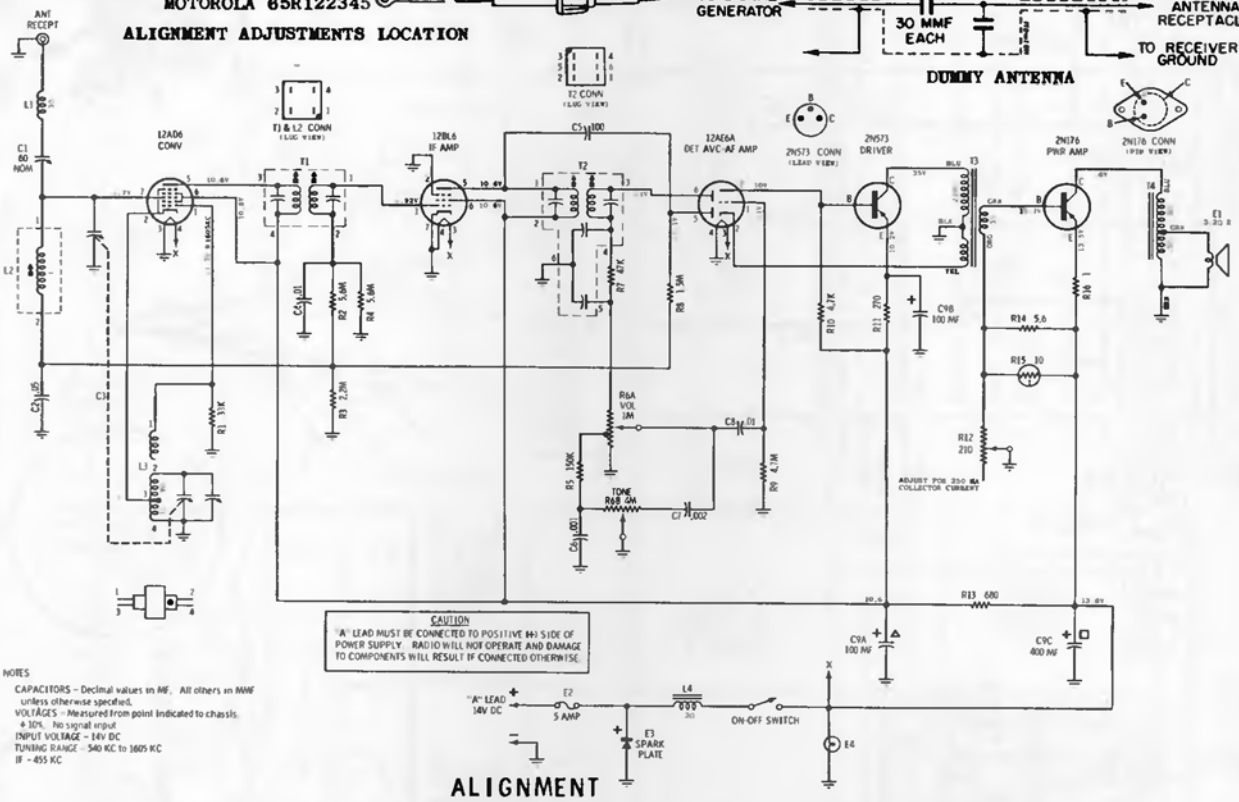


NOTES
CAPACITORS – Decimal values in MF. All others in MMF unless otherwise specified.
VOLTAGES – Measured from point indicated to chassis. ± 30%. No signal input
INPUT VOLTAGE – 14V DC
TUNING RANGE – 540 KC to 1605 KC
IF – 455 KC

## ALIGNMENT

Connect an output meter across the speaker voice coil. Set tone control to high and volume to maximum. Attenuate signal generator output to maintain 1.3 volts on output meter to prevent overloading the receiver.

| STEP | GENERATOR CONNECTION | GENERATOR FREQUENCY (400 cycle mod) | GANG SETTING | ADJUST | REMARKS |
|---|---|---|---|---|---|
| IF ALIGNMENT | | | | | |
| 1. | Ant recept through .1 mf & chassis | 455 Kc | Fully open | 1, 2, 3 & 4 | Peak for maximum. |
| RF ALIGNMENT | | | | | |
| 2. | Ant recept through dummy antenna | 1605 Kc | Fully open | 5 | Peak for maximum. |
| 3. | " | 1400 Kc | Tune for max | 6 | Peak for maximum. |
| 4. | " | 600 Kc | Tune for max | 7 | Peak for maximum while rocking gang. |
| 5. | Repeat steps 3 & 4 until no further increase. The last adjustment should be the trimmer (6). | | | | |
| ANTENNA TRIMMER | | | | | |
| 6. | - | - | Tune to a weak station around 1400 Kc | 6 | With radio installed in car and antenna fully extended, peak antenna trimmer for max. |

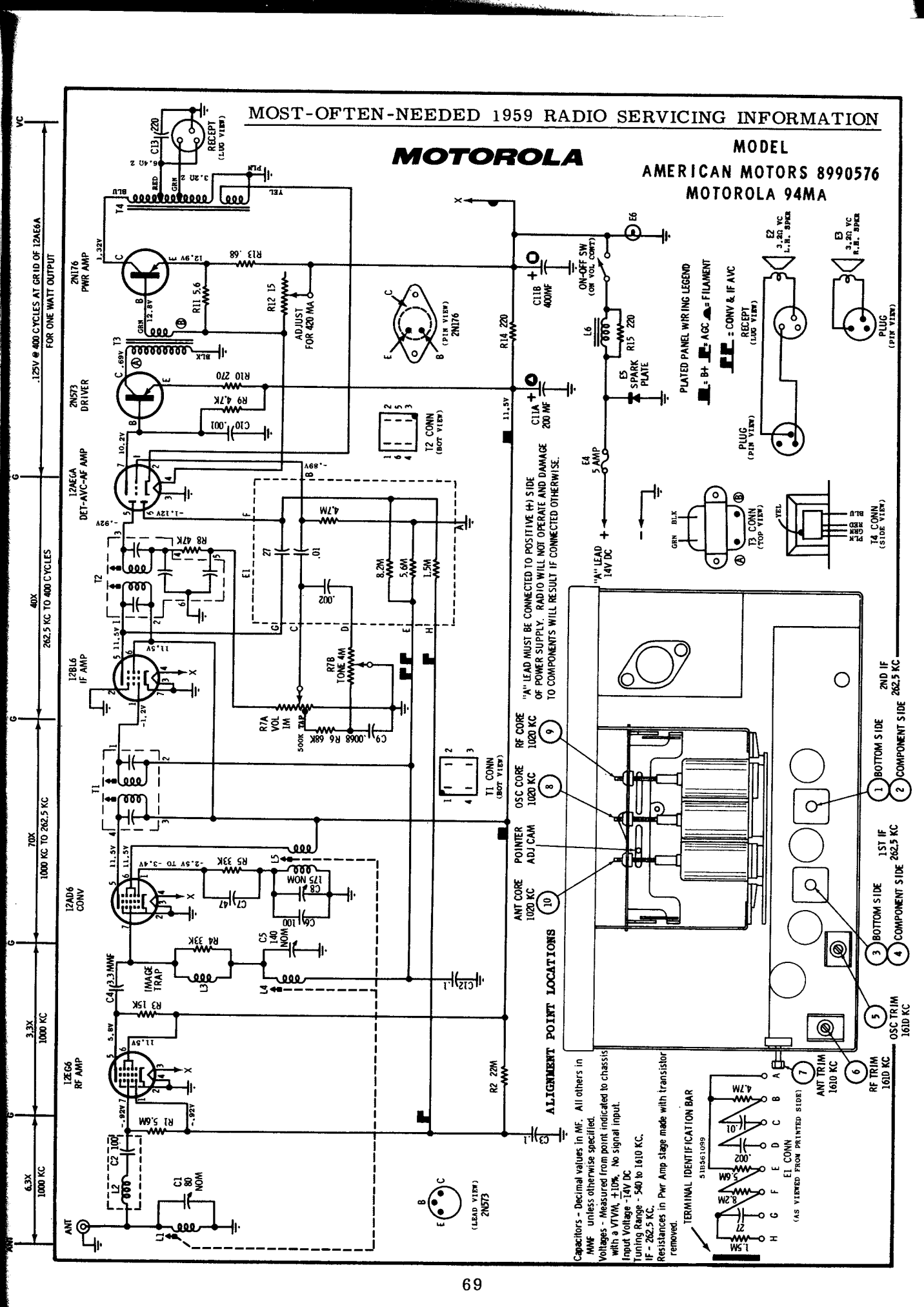
MOTOROLA
MODEL
AMERICAN MOTORS 8990576
MOTOROLA 94MA
.125V @ 400 CYCLES AT GRID OF 12AE6A FOR ONE WATT OUTPUT
40X 262.5 KC TO 400 CYCLES
70X 1000 KC TO 262.5 KC
3.3X 1000 KC
6.3X 1000 KC
2N176 PWR AMP
2N573 DRIVER
12AE6A DET-AVC-AF AMP
12BL6 IF AMP
12AD6 CONV
12EG6 RF AMP
ADJUST FOR 420 MA
IMAGE TRAP
R7A VOL 1M
R7B TONE 4M
ON-OFF SW (ON VOL CONT)
SPARK PLATE
"A" LEAD 14V DC
"A" LEAD MUST BE CONNECTED TO POSITIVE (+) SIDE OF POWER SUPPLY. RADIO WILL NOT OPERATE AND DAMAGE TO COMPONENTS WILL RESULT IF CONNECTED OTHERWISE.
PLATED PANEL WIRING LEGEND
= B+ = AGC = FILAMENT
= CONV & IF AVC
RECEPT (LUG VIEW)
PLUG (PIN VIEW)
T2 CONN (BOT VIEW)
T1 CONN (BOT VIEW)
T3 CONN (TOP VIEW)
T4 CONN (SIDE VIEW)
2N176 (PIN VIEW)
2N573 (LEAD VIEW)
E1 CONN (AS VIEWED FROM PRINTED SIDE)
TERMINAL IDENTIFICATION BAR
ALIGNMENT POINT LOCATIONS
RF CORE 1020 KC
OSC CORE 1020 KC
POINTER ADJ CAM
ANT CORE 1020 KC
2ND IF 262.5 KC
1ST IF 262.5 KC
OSC TRIM 1610 KC
RF TRIM 1610 KC
ANT TRIM 1610 KC
BOTTOM SIDE
COMPONENT SIDE
Capacitors - Decimal values in MF. All others in MMF unless otherwise specified.
Voltages - Measured from point indicated to chassis with a VTVM, ±10%. No signal input.
Input Voltage - 14V DC
Tuning Range - 540 to 1610 KC.
IF - 262.5 KC.
Resistances in Pwr Amp stage made with transistor removed.

# MOTOROLA

## MODELS

## MOTOROLA 94MF, 94MFM
## FORD B9FA-18806-C, B9FA-18805-E

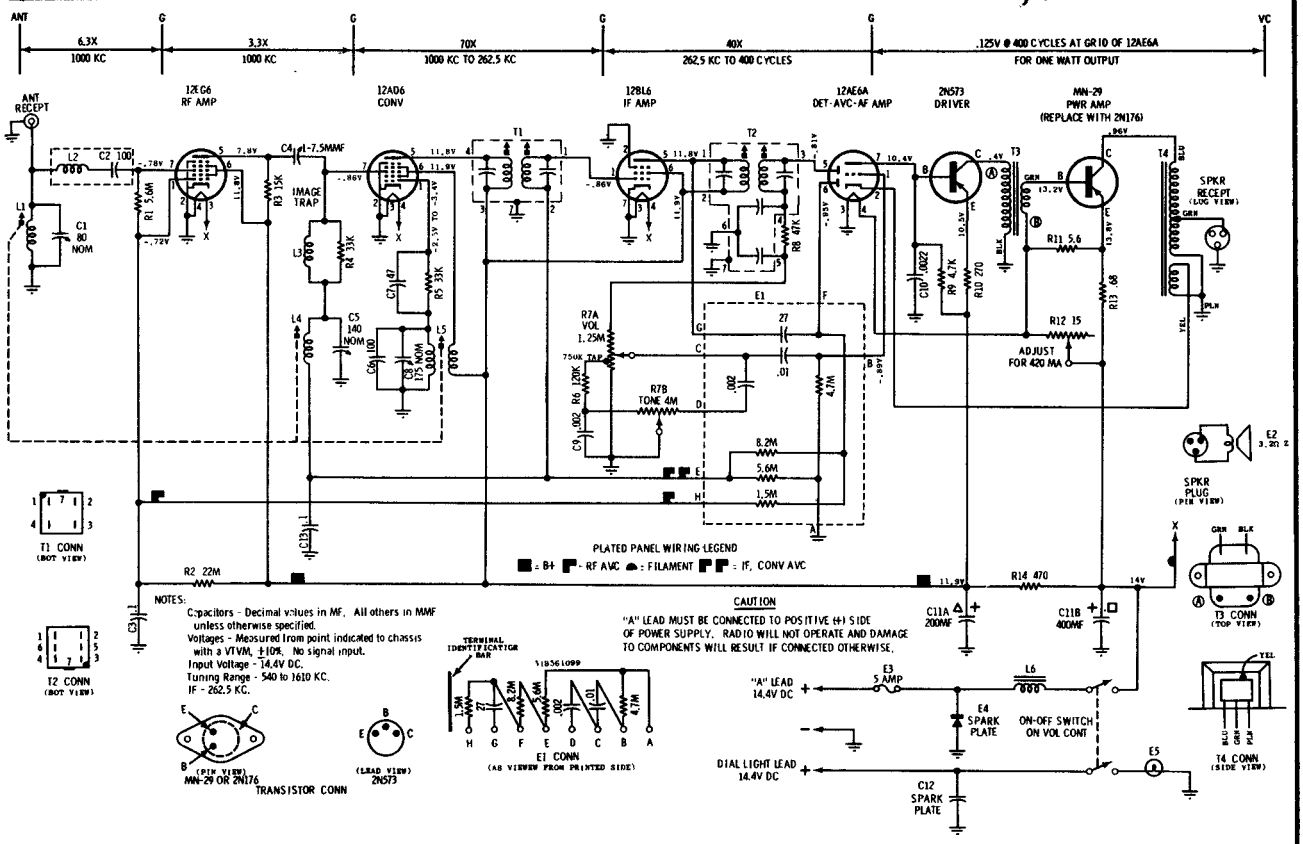


### ALIGNMENT POINT LOCATION DETAIL

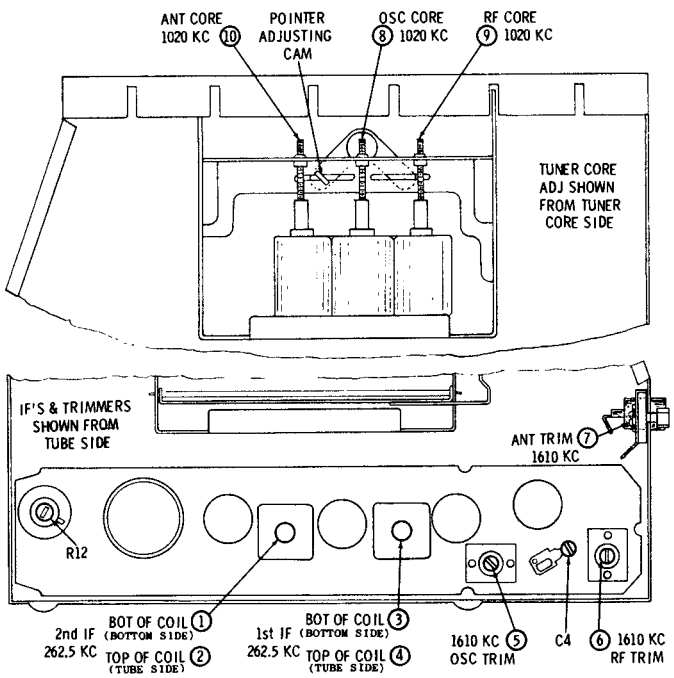


### PLATED CIRCUIT COMPONENT REPLACEMENT

Most of the components can be removed from the panel with the aid of a soldering iron. When using a soldering pot, it may be difficult to dip some of the components close to the edge of the panel because of interference from the radio housing. To use a soldering pot on these components, it will be necessary to partially drop the panel from the housing, to do this proceed as follows:

a. Remove two screws which hold radio housing to front plate (on volume control side of housing).

b. Unsolder connecting lead from antenna spark choke at trimmer side.

c. Unsolder plated panel support bracket from housing and panel, bend ears straight, and carefully remove from plated panel.

d. Carefully remove plated panel from housing and drop below edge of housing.

e. Replace screws removed from housing in step "a." so panel and housing will be more solid during soldering operation.

PLATED CHASSIS REMOVAL - If necessary to remove the plated panel completely from radio housing, proceed as follows:

a. Remove two screws which hold radio housing to front plate (on volume control side of housing).

b. Unsolder connecting leads to free panel. Where possible, avoid unsoldering leads at plated panel.

c. Unsolder plated panel support bracket from housing and panel, bend ears straight, and carefully remove bracket from panel and housing.

d. Plated panel will now be free for careful removal from housing.

NOTE: Do not perform steps 3, 4, 5 & 6 unless tuner has been tampered with or components have been replaced. Before proceeding with step 3, back tuning cores 1-3/8" out of tuning coils to eliminate their effect on trimmer adjustment.

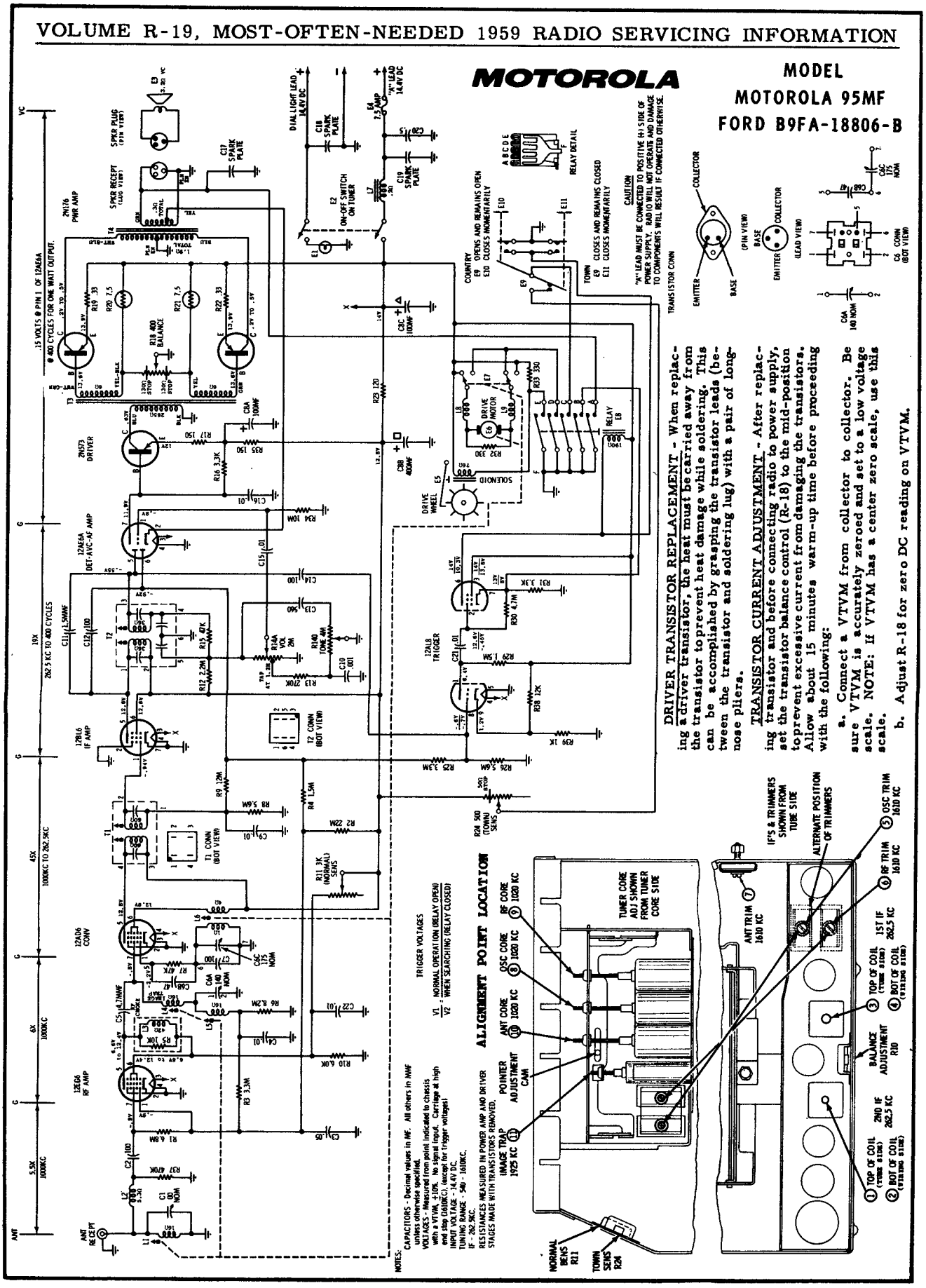
MOTOROLA
MODEL
MOTOROLA 95MF
FORD B9FA-18806-B
DRIVER TRANSISTOR REPLACEMENT - When replacing a driver transistor, the heat must be carried away from the transistor to prevent heat damage while soldering. This can be accomplished by grasping the transistor leads (between the transistor and soldering lug) with a pair of long-nose pliers.
TRANSISTOR CURRENT ADJUSTMENT - After replacing transistor and before connecting radio to power supply, set the transistor balance control (R-18) to the mid-position to prevent excessive current from damaging the transistors. Allow about 15 minutes warm-up time before proceeding with the following:
a. Connect a VTVM from collector to collector. Be sure VTVM is accurately zeroed and set to a low voltage scale. NOTE: If VTVM has a center zero scale, use this
b. Adjust R-18 for zero DC reading on VTVM.
ALIGNMENT POINT LOCATION
TRIGGER VOLTAGES
V1 - NORMAL OPERATION (RELAY OPEN)
V2 - WHEN SEARCHING (RELAY CLOSED)
NOTES:
CAPACITORS - Decimal values in MF. All others in MMF unless otherwise specified.
VOLTAGES - Measured from point indicated to chassis with a VTVM, ±10%. No signal input. Carriage at high end stop (1610KC), (except for trigger voltages)
INPUT VOLTAGE - 14.4V DC
TUNING RANGE - 540 - 1610KC.
IF - 262.5KC.
RESISTANCES MEASURED IN POWER AMP AND DRIVER STAGES MADE WITH TRANSISTORS REMOVED.
TUNER CORE ADJ SHOWN FROM TUNER CORE SIDE
IF'S & TRIMMERS SHOWN FROM TUBE SIDE
ALTERNATE POSITION OF TRIMMERS

# MOTOROLA

## Models 300X and 301X

These are 12-volt sets designed for universal underdash installation. Model 300X, circuit on this page, is for use in cars with a negative ground electrical system. Model 301X, diagram on next page adjacent at right, is for cars with positive ground electrical system. Other material applies to both models.

MODEL 300X SCHEMATIC DIAGRAM

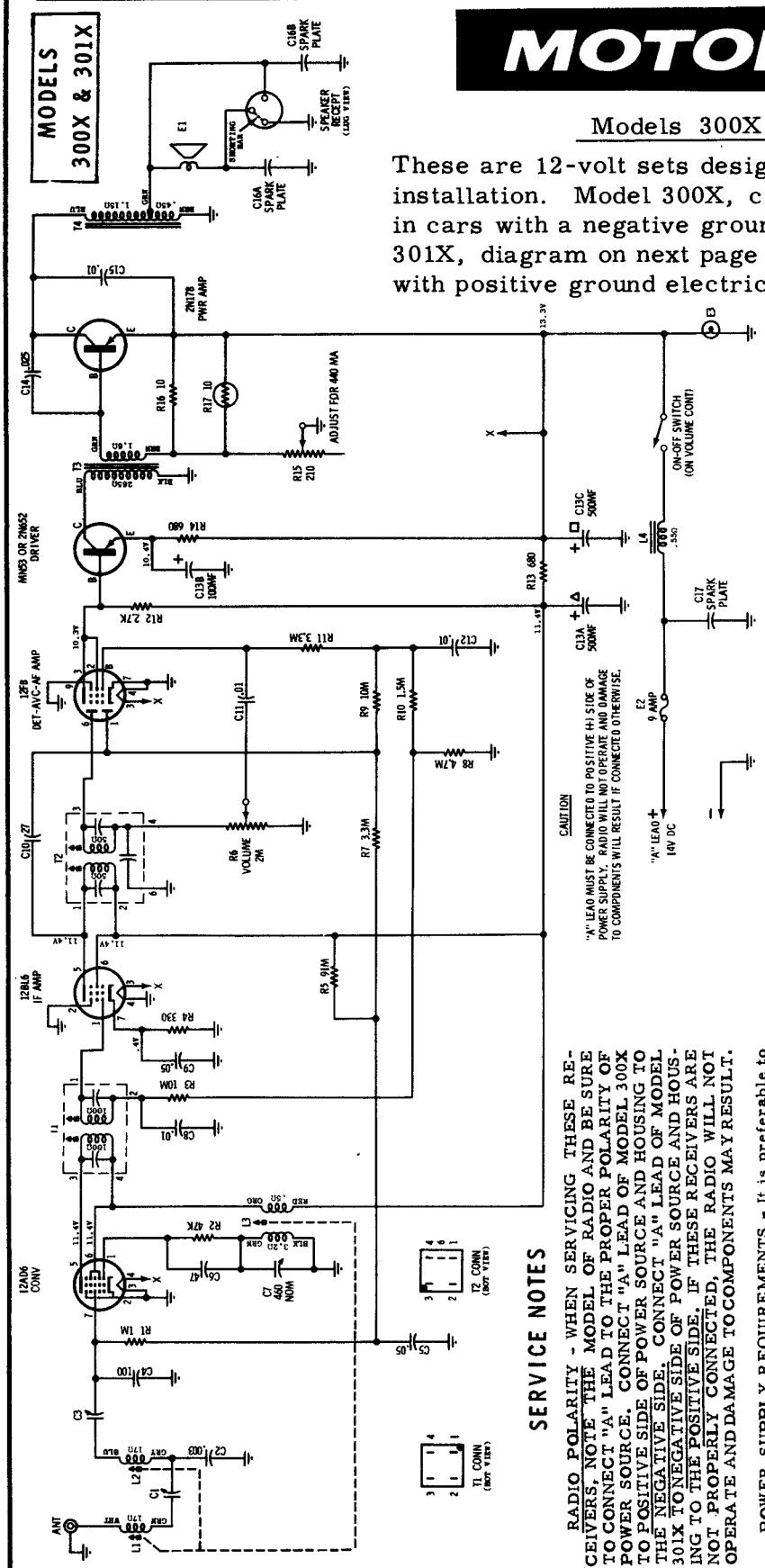


## SERVICE NOTES

RADIO POLARITY - WHEN SERVICING THESE RECEIVERS, NOTE THE MODEL OF RADIO AND BE SURE TO CONNECT "A" LEAD TO THE PROPER POLARITY OF POWER SOURCE. CONNECT "A" LEAD OF MODEL 300X TO POSITIVE SIDE OF POWER SOURCE AND HOUSING TO THE NEGATIVE SIDE. CONNECT "A" LEAD OF MODEL 301X TO NEGATIVE SIDE OF POWER SOURCE AND HOUSING TO THE POSITIVE SIDE. IF THESE RECEIVERS ARE NOT PROPERLY CONNECTED, THE RADIO WILL NOT OPERATE AND DAMAGE TO COMPONENTS MAY RESULT.

POWER SUPPLY REQUIREMENTS - It is preferable to use a storage battery (without a battery charger) in place of a battery eliminator when servicing this receiver, because the average eliminator has an extremely high AC ripple content which may damage the transistor and other low voltage components.

POWER TRANSISTOR CURRENT ADJUSTMENT - After a power transistor has been replaced, the collector current should be checked and adjusted for proper operation.

a. Connect a 0-3 amp DC ammeter in series with the "A" lead.

b. Remove output transistor from its socket.

c. Turn radio on and read ammeter with 12.6 volts input to "A" lead (approximately 800 ma). NOTE READING.

d. Turn radio off and replace transistor

e. Turn radio on and adjust R-15 for a 360 ma increase over reading noted in step c with 12.6 volts input to "A" lead.

NOTE: Two values of radio input voltage are given as a convenience to service personnel in order to accommodate different power sources. The current value of 440 ma stated on the schematic is for 14 volts DC input to receiver "A" lead.

POWER TRANSISTOR INSULATOR - When replacing a power transistor or power transistor insulator, be sure to coat both sides of insulator with DC-4 grease (Motorola Part No. 11M490487) to insure proper heat dissipation.

TRANSISTOR CHECK - The transistors used in this receiver can be expected to give unusually long trouble-free life. However, the following transistor checks are provided to facilitate servicing:

Substituting a known good transistor for a suspected one is the simplest and most positive way of checking transistors. When a transistor is not available for substitution, make a resistance check of the stage. If the values are within the tolerance rating, the bias network can be eliminated as a source of defect and the transistor safely suspected. Bias network defects can be located by resistance checks.

## MOTOROLA Models 300X and 301X, Continued

This page has the circuit of Model 301X, and other service material that is applicable to both 300X and 301X. See also the material on previous page, at left.

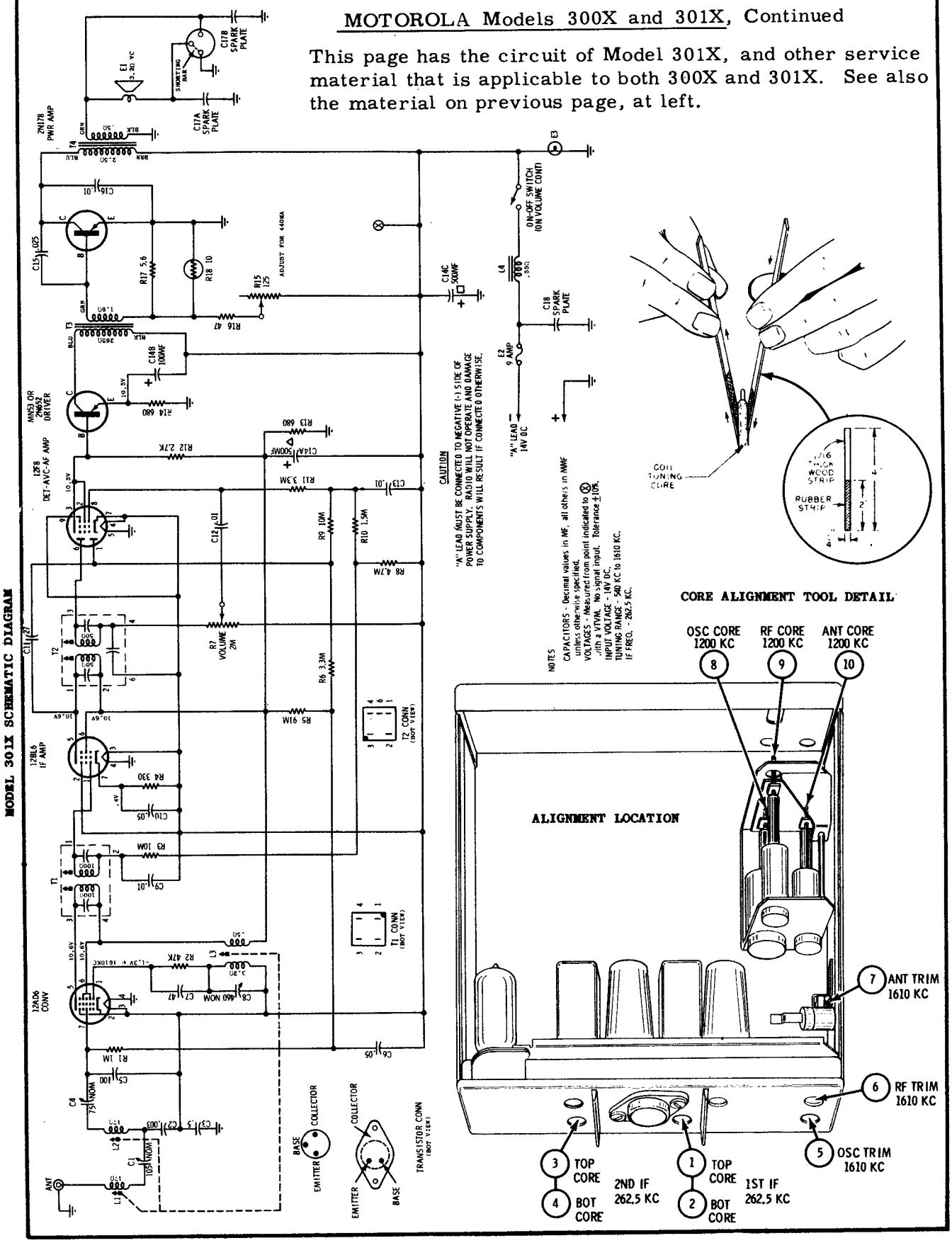

# MOTOROLA

## MODEL 406

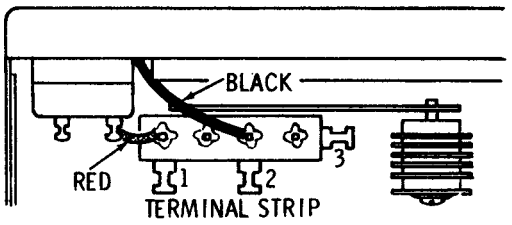


RADIO WIRING FOR CARS WITH A NEGATIVE GROUND ELECTRICAL SYSTEM - RED LEAD MUST BE SOLDERED TO TERMINAL NO. 1: BLACK LEAD TO TERMINAL NO. 2.

RADIO POLARITY - BEFORE CONNECTING RADIO TO A 6 VOLT POWER SOURCE, REMOVE BOTTOM COVER AND CHECK POLARITY WIRING AGAINST DETAIL. THEN CONNECT RADIO TO POWER SOURCE PER DETAIL. IF THIS RECEIVER IS NOT PROPERLY CONNECTED, IT WILL NOT OPERATE AND DAMAGE TO COMPONENTS MAY RESULT.

OUTPUT TRANSISTOR CURRENT ADJUSTMENT - After an output transistor has been replaced, the collector current should be checked and adjusted for proper operation.

a. Connect a 3 amp DC ammeter in series with the "A" lead.
b. Remove output transistor from its socket.
c. Turn radio on and read ammeter with 6.3 volts input to "A" lead (approximately 2.0 amp). NOTE READING.
d. Turn radio off and replace transistor
e. Turn radio on and adjust R-14 for a 600 ma increase over reading noted in step c with 6.3 volts input to "A" lead.

NOTE: Two values of radio input voltage are given as a convenience to service personnel in order to accommodate different power sources. The current value of 720 ma stated on the schematic is for 7 volts DC input to receiver "A" lead.

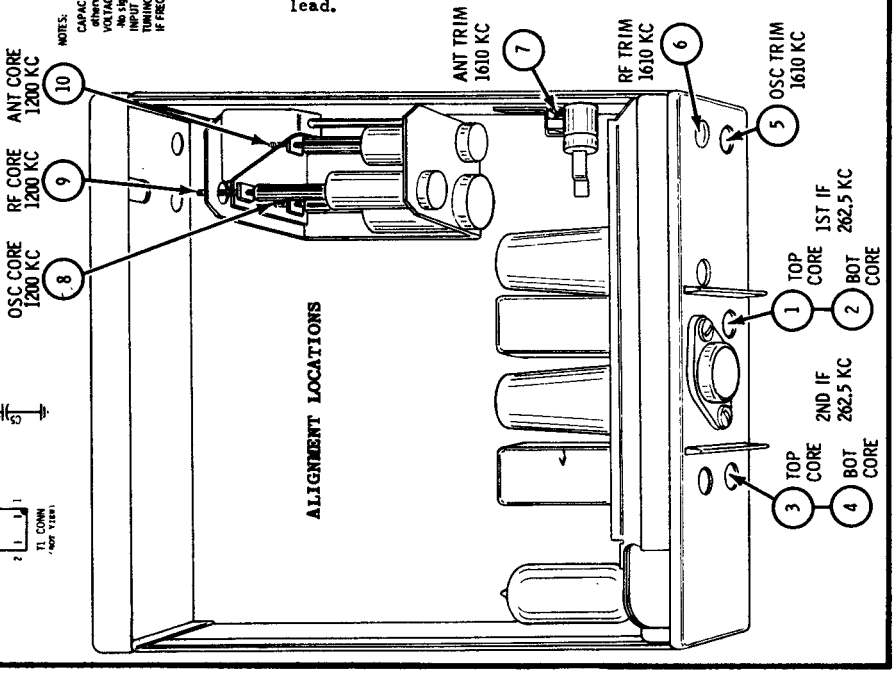

# MOTOROLA

MODEL
GV-701

TRANSISTOR CURRENT ADJUSTMENT - After replacing a transistor, the collector current must be adjusted to insure proper operation of the output stage. Adjustment of the collector current must be made within one minute after the receiver has been turned on - before it has time to warm up. If the receiver is warm from operation, it will have to be cooled before adjusting the collector current.

A. Set R-21 to maximum resistance position (fully counter-clockwise when viewed from the wiring side) so that the new transistor does not draw excessive collector current and "run away".

B. Unsolder output transformer (T-4) black lead and grounded speaker lead from chassis; connect the two leads together. Be sure speaker is connected while making adjustment; volume control must be set to minimum. Connect the positive side of a 0 - 1.0 amp DC ammeter to the two leads just removed and the negative side to chassis. The meter used must have an internal resistance of .05 ohms or less; if higher, meter will act as a current limiter and cause an incorrect adjustment.

C. Adjust R-21, within one minute, after turning on a cold receiver for a total collector current reading of 160 ma with 12.6 volts input to receiver's "A" lead. Resolder two leads to chassis after adjustment.

NOTE: Two values of receiver input voltage are given as a convenience to service personnel to accommodate different power sources. The schematic total collector current value of 200 ma is stated with 14 volts DC input to receiver's "A" lead.

POWER TRANSISTOR INSULATOR - When replacing a power transistor or power transistor insulator, be sure to coat both sides of insulator with DC-4 grease (Motorola Part No. 11M490487) to insure proper heat dissipation.

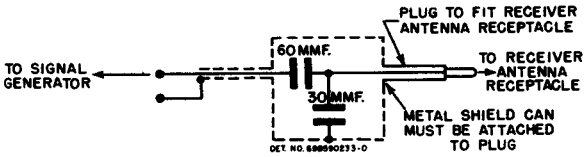


DUMMY ANTENNA DETAIL

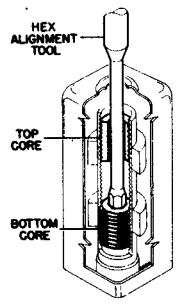


IF ALIGNMENT DETAIL

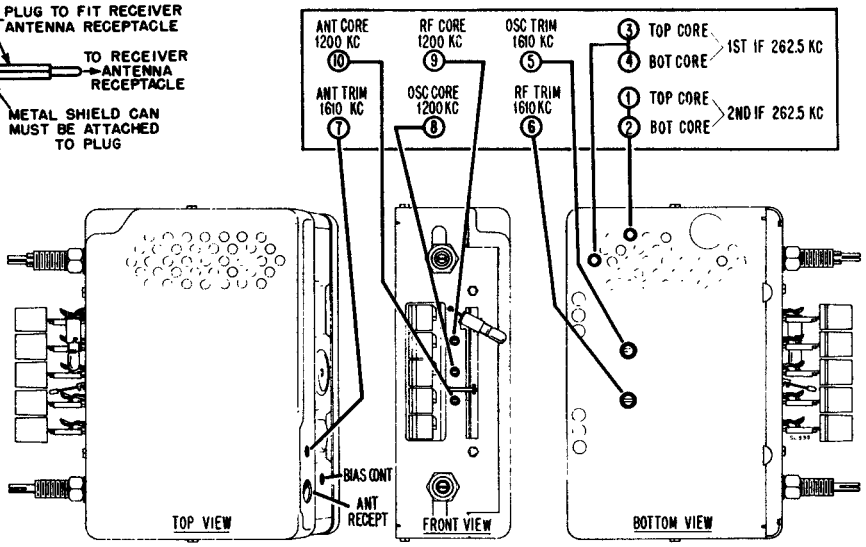


ALIGNMENT POINT LOCATIONS DETAIL

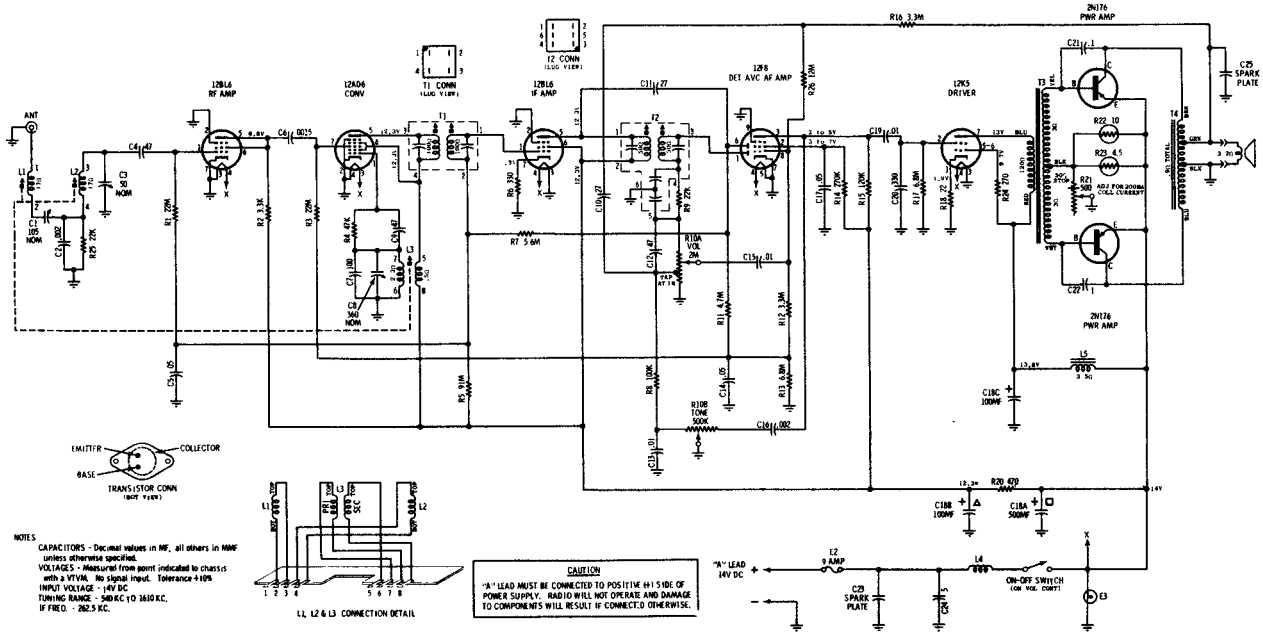

# MOTOROLA

## Auto Radio Model GV-800

(Continued on the next page at right)

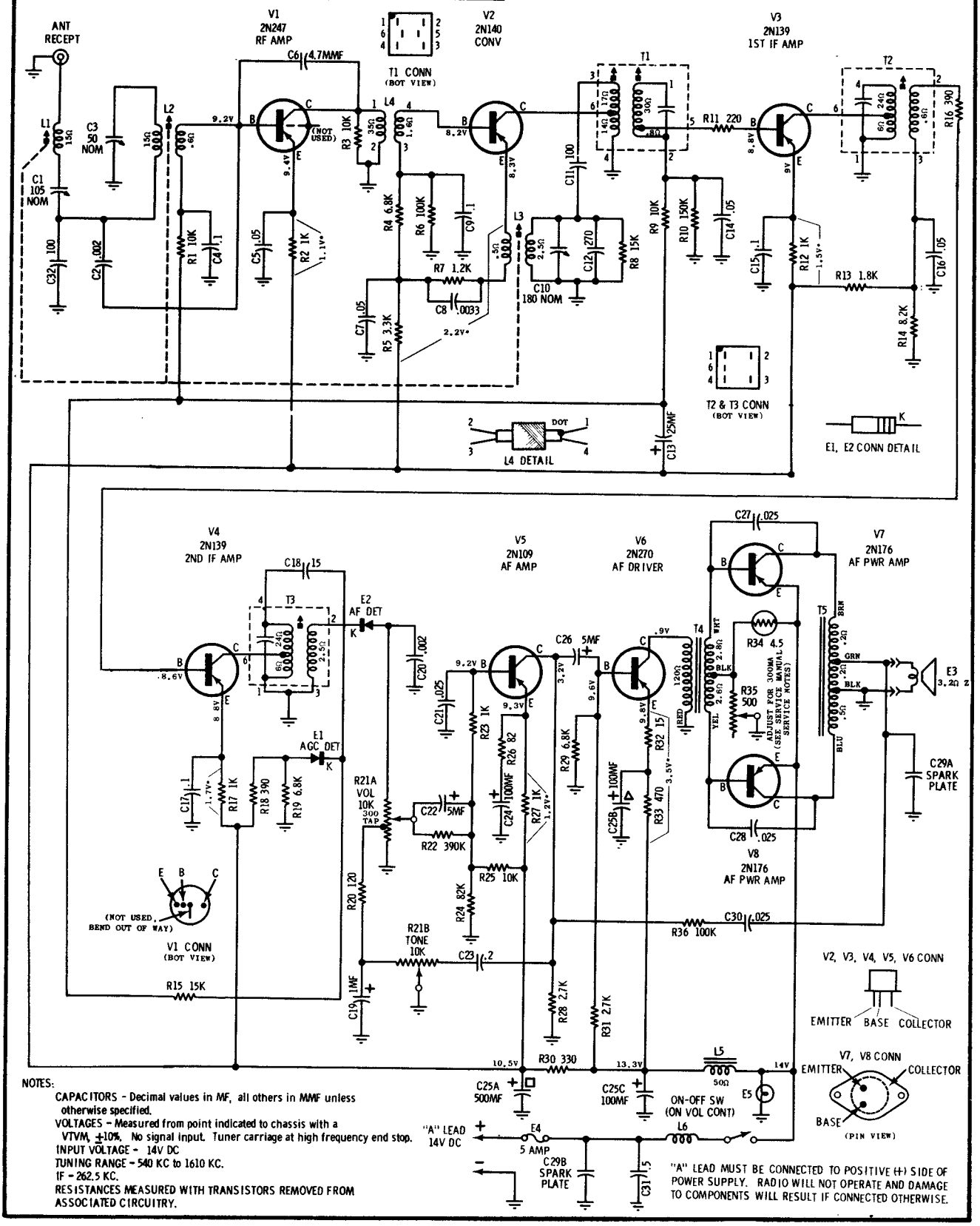


NOTES:

CAPACITORS - Decimal values in MF, all others in MMF unless otherwise specified.
VOLTAGES - Measured from point indicated to chassis with a VTVM, ±10%. No signal input. Tuner carriage at high frequency end stop.
INPUT VOLTAGE - 14V DC
TUNING RANGE - 540 KC to 1610 KC.
IF - 262.5 KC.
RESISTANCES MEASURED WITH TRANSISTORS REMOVED FROM ASSOCIATED CIRCUITRY.

"A" LEAD MUST BE CONNECTED TO POSITIVE (+) SIDE OF POWER SUPPLY. RADIO WILL NOT OPERATE AND DAMAGE TO COMPONENTS WILL RESULT IF CONNECTED OTHERWISE.

MOTOROLA Model GV-800, Alignment Adjustments & Parts Location Continued.

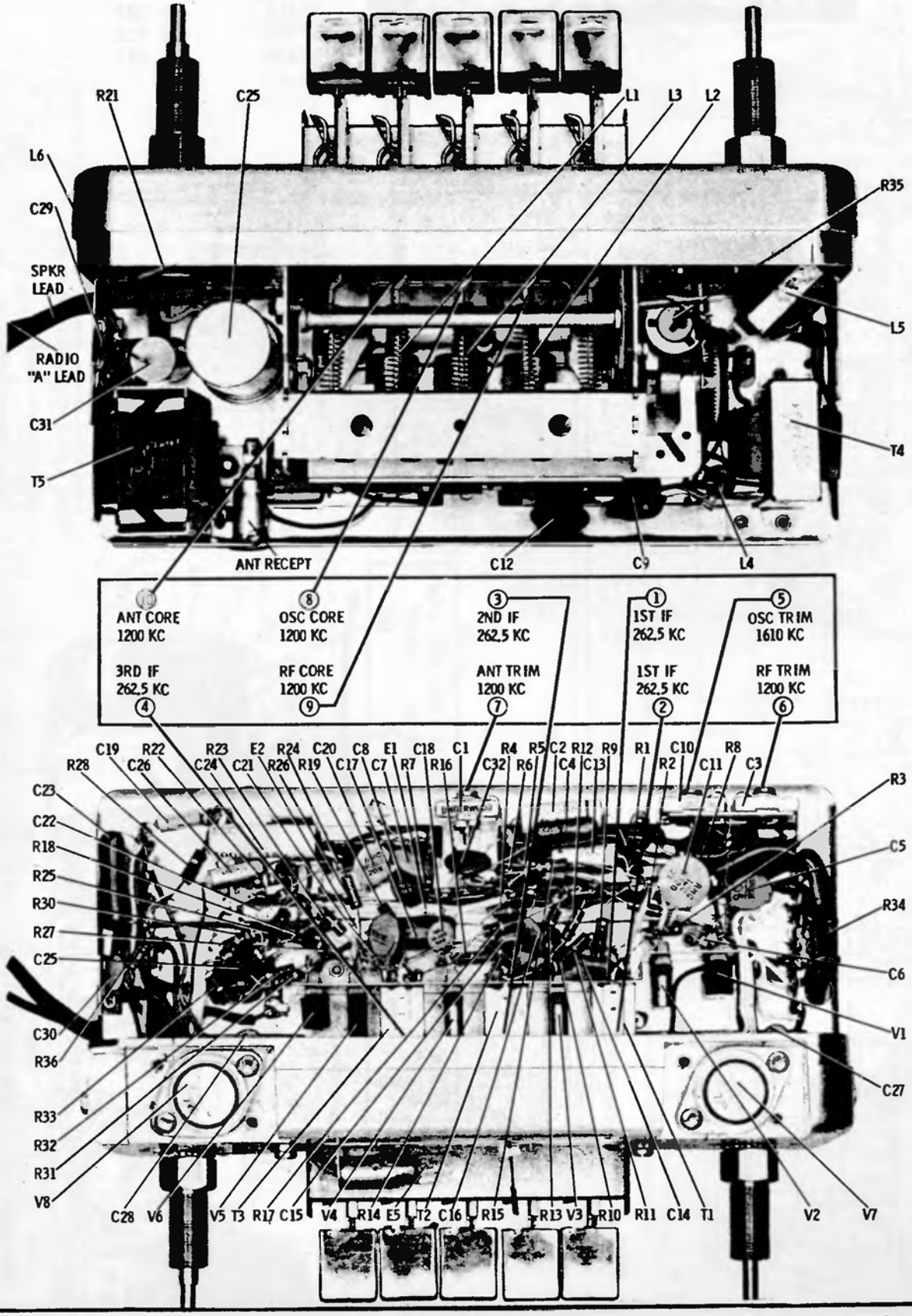

# MOTOROLA

| MODELS | CHASSIS |
|---|---|
| 5P21B | HS-633 |
| 5P21N | HS-633 |
| 5P21R | HS-633 |

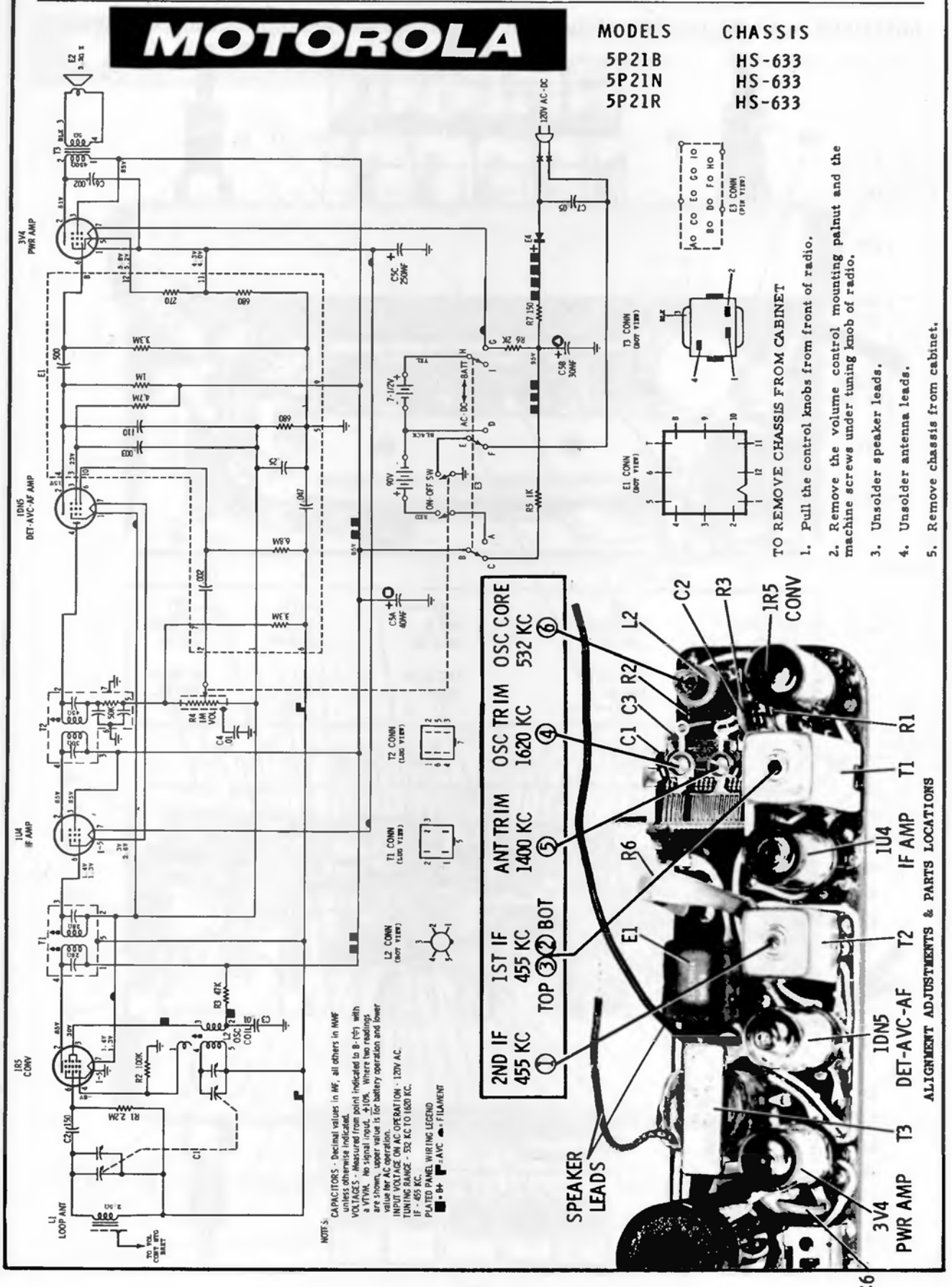


ALIGNMENT ADJUSTMENTS & PARTS LOCATIONS

TO REMOVE CHASSIS FROM CABINET

1. Pull the control knobs from front of radio.
2. Remove the volume control mounting palnut and the machine screws under tuning knob of radio.
3. Unsolder speaker leads.
4. Unsolder antenna leads.
5. Remove chassis from cabinet.

# MOTOROLA

| MODELS | CHASSIS |
|---|---|
| 6P25E | HS-637 |
| 6P25N | HS-637 |
| 6P25S | HS-637 |

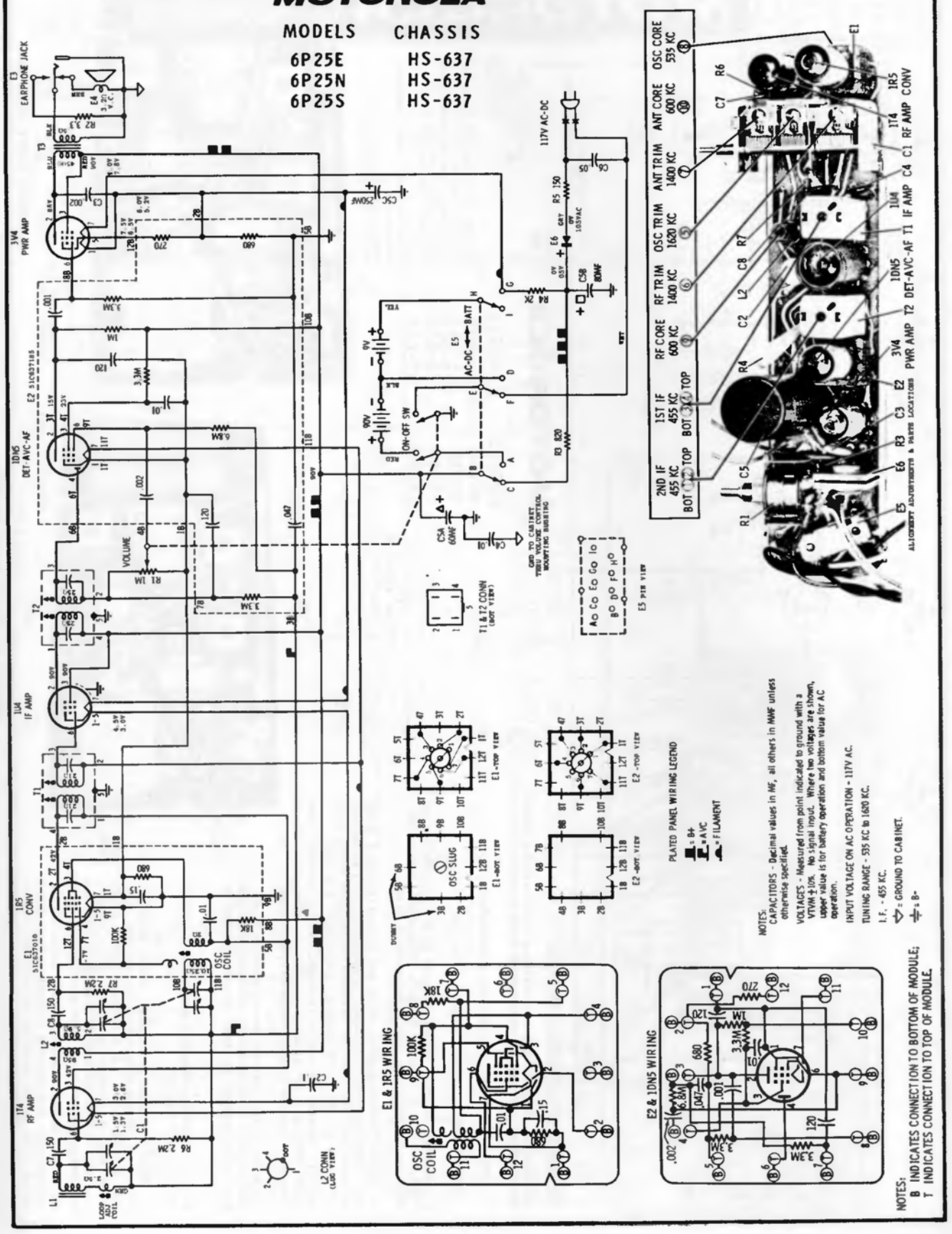

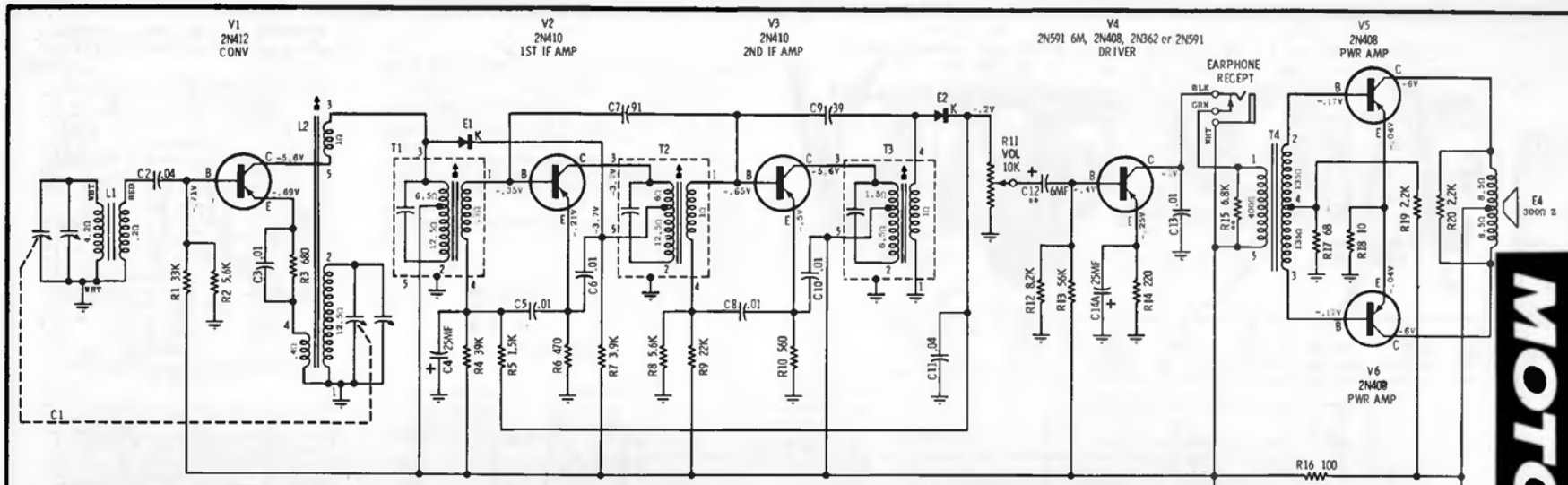


## PLATED PANEL CHASSIS REMOVAL

1. Remove cabinet back by inserting a coin into the cover opening slot and twisting until cabinet back is free.

2. Remove earphone jack mounting nut and washer.

3. From inside cabinet, remove batteries.

4. Remove battery contact panels by pulling straight out (note position of rounded corners on panels to insure correct positioning when chassis is replaced later).

5. Spread cabinet slightly at top and bottom (points A & B) until chassis is free of chassis retainers (C & D) at top and bottom of cabinet; then lift up chassis at speaker end of cabinet until it clears the chassis retainers (C & D

6. Lift chassis up until it is slightly above speaker, then slide chassis over speaker so that the chassis is free of chassis retainers (E & F) below earphone jack.

7. From under chassis, loosen speaker mounting screws until speaker mounting brackets are loose enough so that the speaker can be removed.

8. Lift chassis, speaker, and battery contact panels out of cabinet.

9. Before replacing chassis, mount speaker, then insert tuning gang end of chassis into cabinet, spread points A & B of cabinet, then lower other end of chassis into place under chassis retainers C & D (make certain battery leads are dressed under and away from antenna).

10. Place battery contact panels back into the cabinet slots with rounded corners of each panel facing in the same direction as originally found.


L2 CONN
(BOT VIEW)

T1, T2 & T3 CONN
(BOT VIEW)

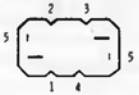

T4 CONN
(BOT VIEW)


TRANSISTOR CONN
(Lead View)

**MOTOROLA**

| MODELS | CHASSIS |
|---|---|
| 6X28B | HS-638 |
| 6X28N | HS-638 |
| 6X28P | HS-638 |
| 6X28W | HS-638 |

Power 8 Series

NOTES:
CAPACITORS - Decimal values in MF, all others in MMF unless otherwise specified.
VOLTAGES - Measured from point indicated to ground with a VTVM, ±10%. No signal in.
TUNING RANGE - 535 KC to 1620 KC.
IF - 455 KC.
Resistances measured with transistors removed from associated circuitry.
**When C12 is 6MF, R15 is used, when C12 is .08MF, R15 is not used

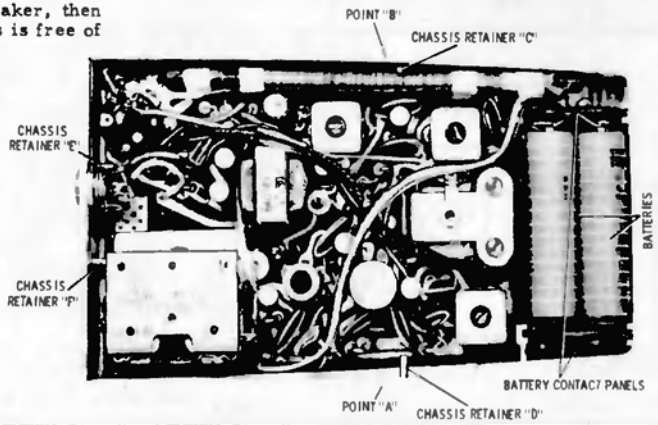


REMOVAL OF PLATED PANEL CHASSIS

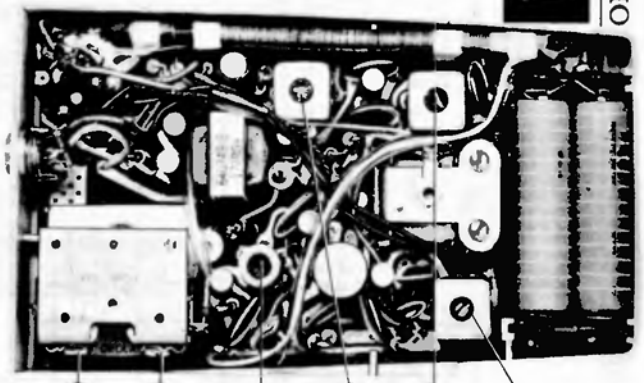


ALIGNMENT POINT LOCATIONS

# MOTOROLA

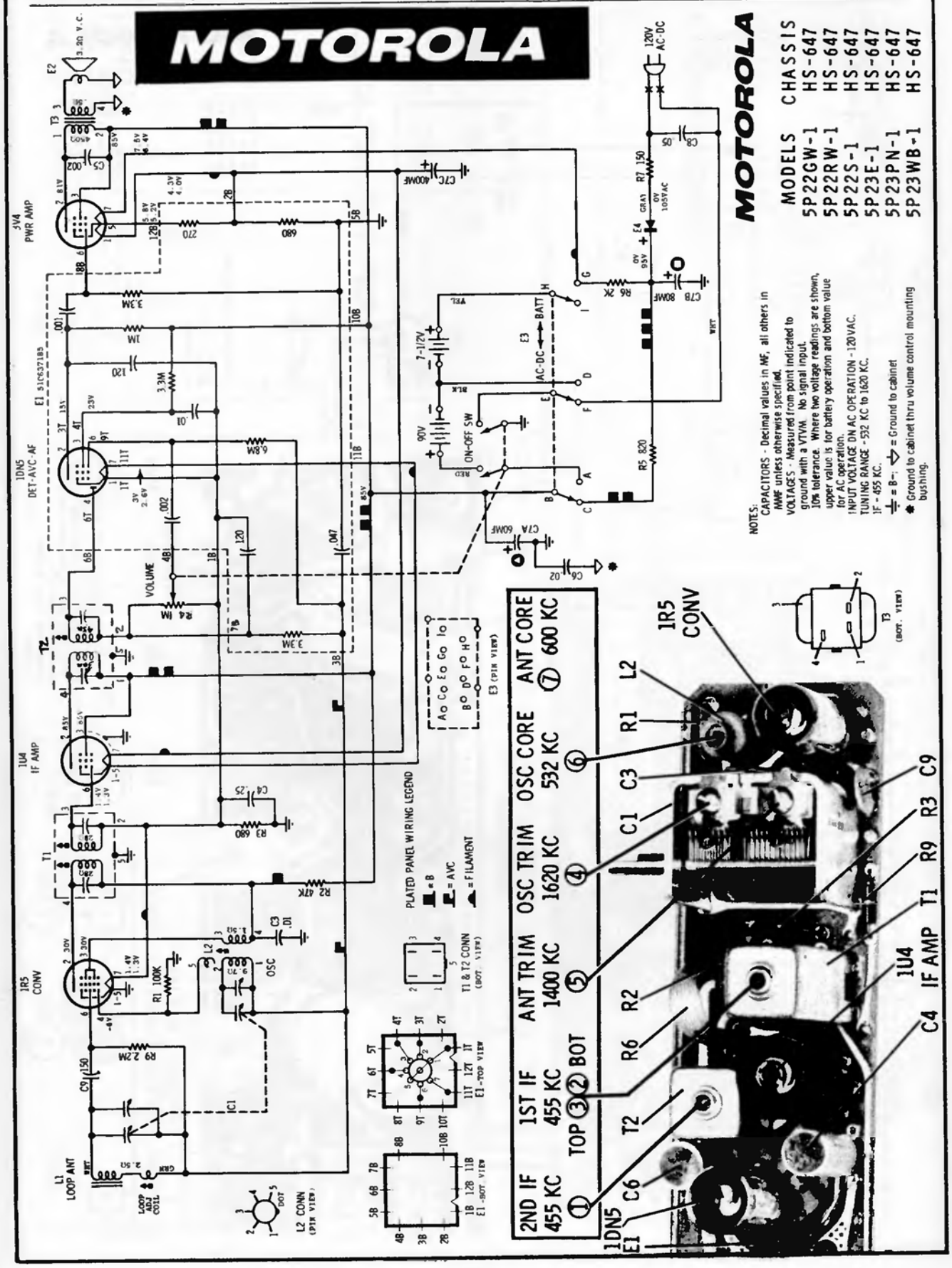


**MOTOROLA**

| MODELS | CHASSIS |
|---|---|
| 5P22GW-1 | HS-647 |
| 5P22RW-1 | HS-647 |
| 5P22S-1 | HS-647 |
| 5P23E-1 | HS-647 |
| 5P23PN-1 | HS-647 |
| 5P23WB-1 | HS-647 |

NOTES:
CAPACITORS - Decimal values in MF, all others in MMF unless otherwise specified.
VOLTAGES - Measured from point indicated to ground with a VTVM. No signal input. 10% tolerance. Where two voltage readings are shown, upper value is for battery operation and bottom value for AC operation.
INPUT VOLTAGE ON AC OPERATION - 120 VAC.
TUNING RANGE - 532 KC to 1620 KC.
IF - 455 KC.
⏚ = B-; ⏚ = Ground to cabinet
* Ground to cabinet thru volume control mounting bushing.

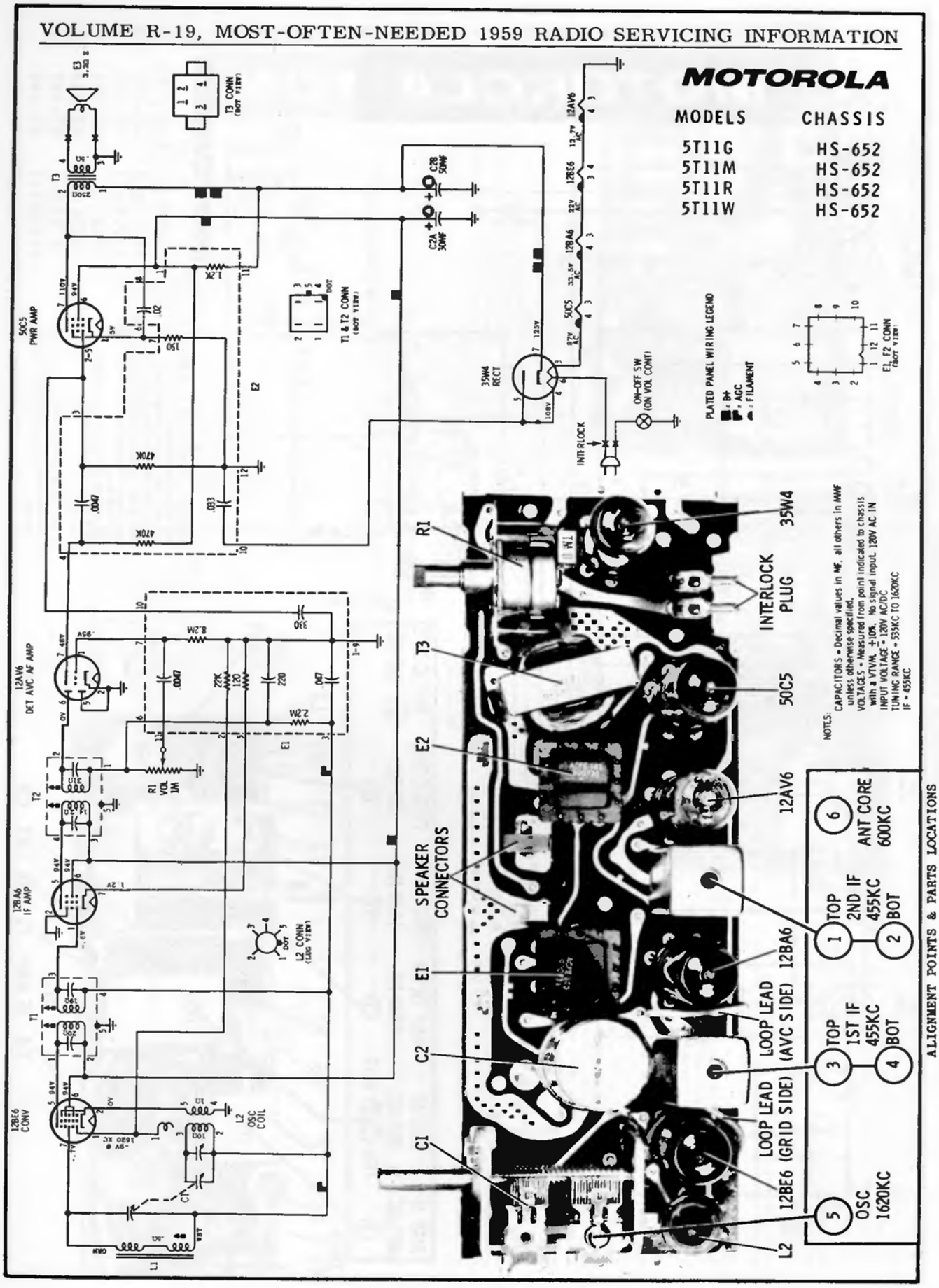
MOTOROLA
MODELS
CHASSIS
5T11G HS-652
5T11M HS-652
5T11R HS-652
5T11W HS-652
50C5 PWR AMP
12AV6 DET AVC AF AMP
12BA6 IF AMP
12BE6 CONV
35W4 RECT
T3 CONN (BOT VIEW)
T1 & T2 CONN (BOT VIEW)
L2 CONN (LOG VIEW)
E1, E2 CONN (BOT VIEW)
ON-OFF SW (ON VOL CONT)
INTERLOCK
PLATED PANEL WIRING LEGEND
= B+
= AGC
= FILAMENT
R1 VOL 1M
L2 OSC COIL
R1
T3
E2
E1
C2
C1
L2
SPEAKER CONNECTORS
INTERLOCK PLUG
35W4
50C5
12AV6
12BA6
LOOP LEAD (AVC SIDE)
LOOP LEAD (GRID SIDE)
12BE6
NOTES:
CAPACITORS = Decimal values in MF, all others in MMF unless otherwise specified.
VOLTAGES = Measured from point indicated to chassis with a VTVM, ±10%. No signal input. 120V AC IN
INPUT VOLTAGE = 120V AC/DC
TUNING RANGE = 535KC TO 1620KC
IF = 455KC
1 TOP 2ND IF 455KC
2 BOT
3 TOP 1ST IF 455KC
4 BOT
5 OSC 1620KC
6 ANT CORE 600KC
ALIGNMENT POINTS & PARTS LOCATIONS

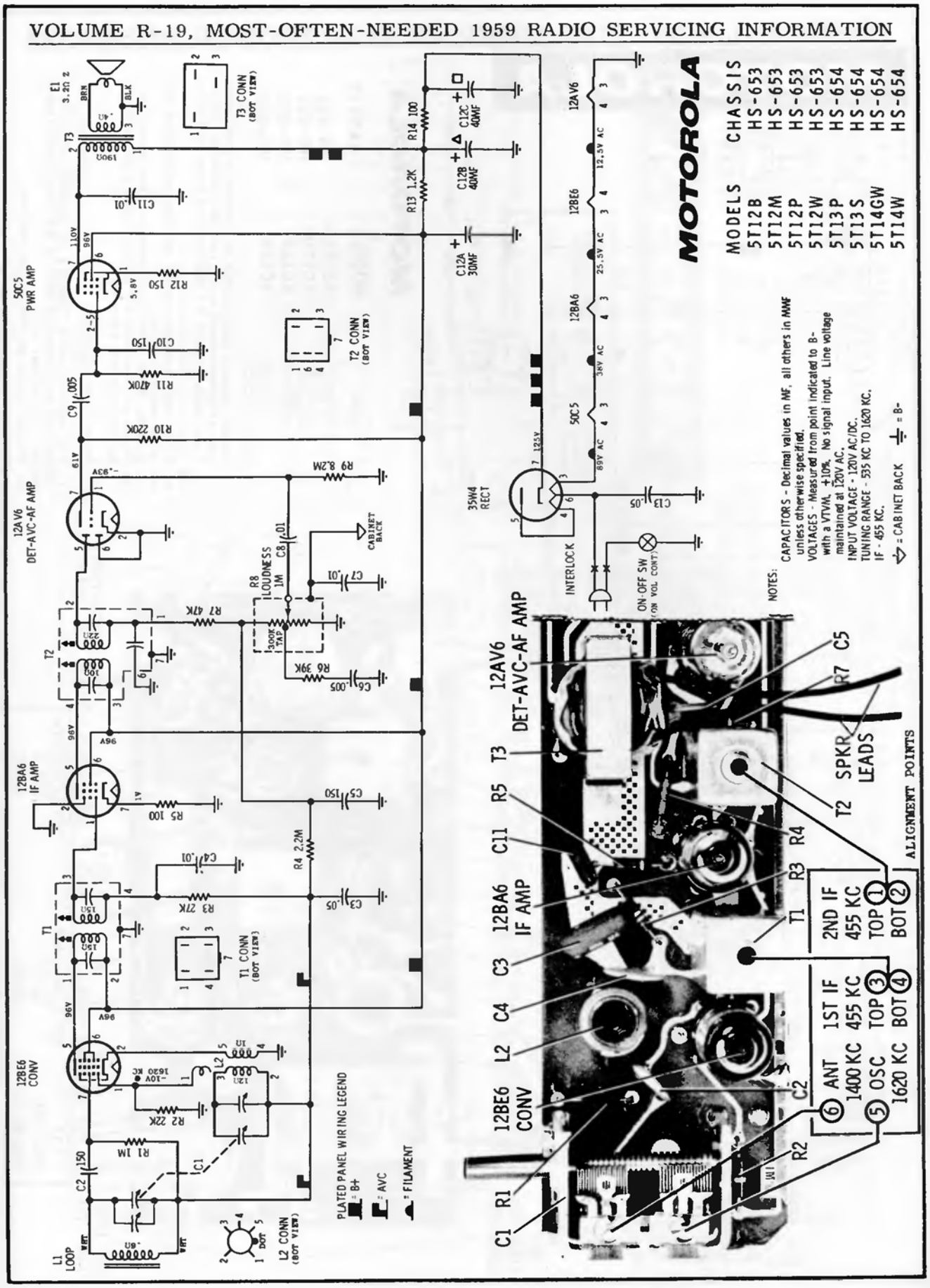
MOTOROLA
MODELS CHASSIS
5T12B HS-653
5T12M HS-653
5T12P HS-653
5T12W HS-653
5T13P HS-654
5T13S HS-654
5T14GW HS-654
5T14W HS-654
NOTES:
CAPACITORS - Decimal values in MF, all others in MMF unless otherwise specified.
VOLTAGES - Measured from point indicated to B- with a VTVM, ±10%. No signal input. Line voltage maintained at 120V AC.
INPUT VOLTAGE - 120V AC/DC.
TUNING RANGE - 535 KC TO 1620 KC.
IF - 455 KC.
= CABINET BACK
= B-
50C5 PWR AMP
12AV6 DET-AVC-AF AMP
12BA6 IF AMP
12BE6 CONV
35W4 RECT
INTERLOCK
ON-OFF SW (ON VOL CONT)
CABINET BACK
T3 CONN (BOT VIEW)
T2 CONN (BOT VIEW)
T1 CONN (BOT VIEW)
L2 CONN (BOT VIEW)
PLATED PANEL WIRING LEGEND
= B+
= AVC
= FILAMENT
12AV6 DET-AVC-AF AMP
T3
R5
C11
12BA6 IF AMP
C3
C4
L2
12BE6 CONV
C1
R1
C5
R7
SPKR LEADS
T2
R4
R3
T1
C2
R2
ALIGNMENT POINTS
2ND IF 455 KC TOP 1 BOT 2
1ST IF 455 KC TOP 3 BOT 4
6 ANT 1400 KC
5 OSC 1620 KC

# MOTOROLA

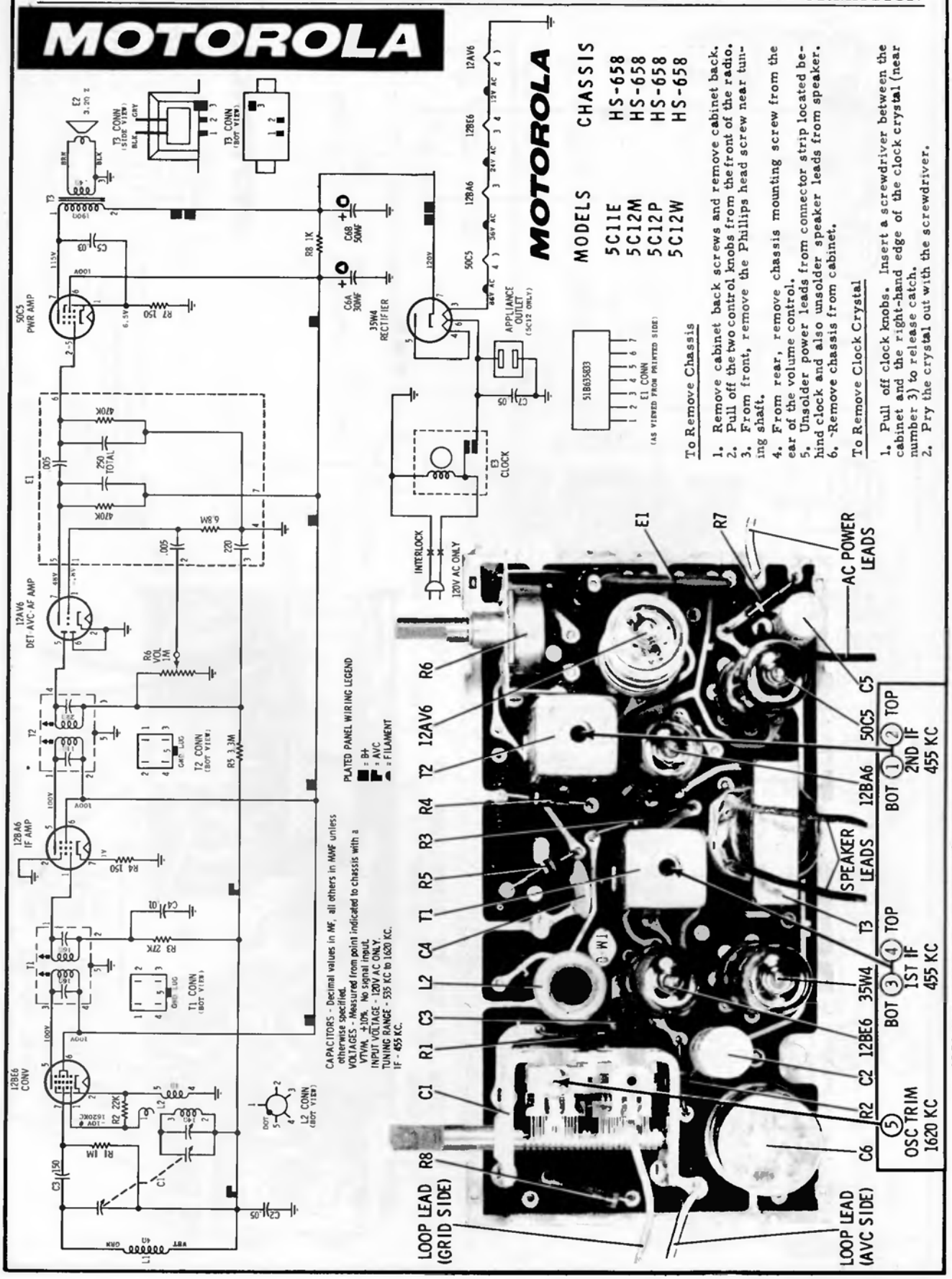


**MOTOROLA**

| MODELS | CHASSIS |
|---|---|
| 5C11E | HS-658 |
| 5C12M | HS-658 |
| 5C12P | HS-658 |
| 5C12W | HS-658 |

### To Remove Chassis

1. Remove cabinet back screws and remove cabinet back.
2. Pull off the two control knobs from the front of the radio.
3. From front, remove the Phillips head screw near tuning shaft.
4. From rear, remove chassis mounting screw from the ear of the volume control.
5. Unsolder power leads from connector strip located behind clock and also unsolder speaker leads from speaker.
6. Remove chassis from cabinet.

### To Remove Clock Crystal

1. Pull off clock knobs. Insert a screwdriver between the cabinet and the right-hand edge of the clock crystal (near number 3) to release catch.
2. Pry the crystal out with the screwdriver.

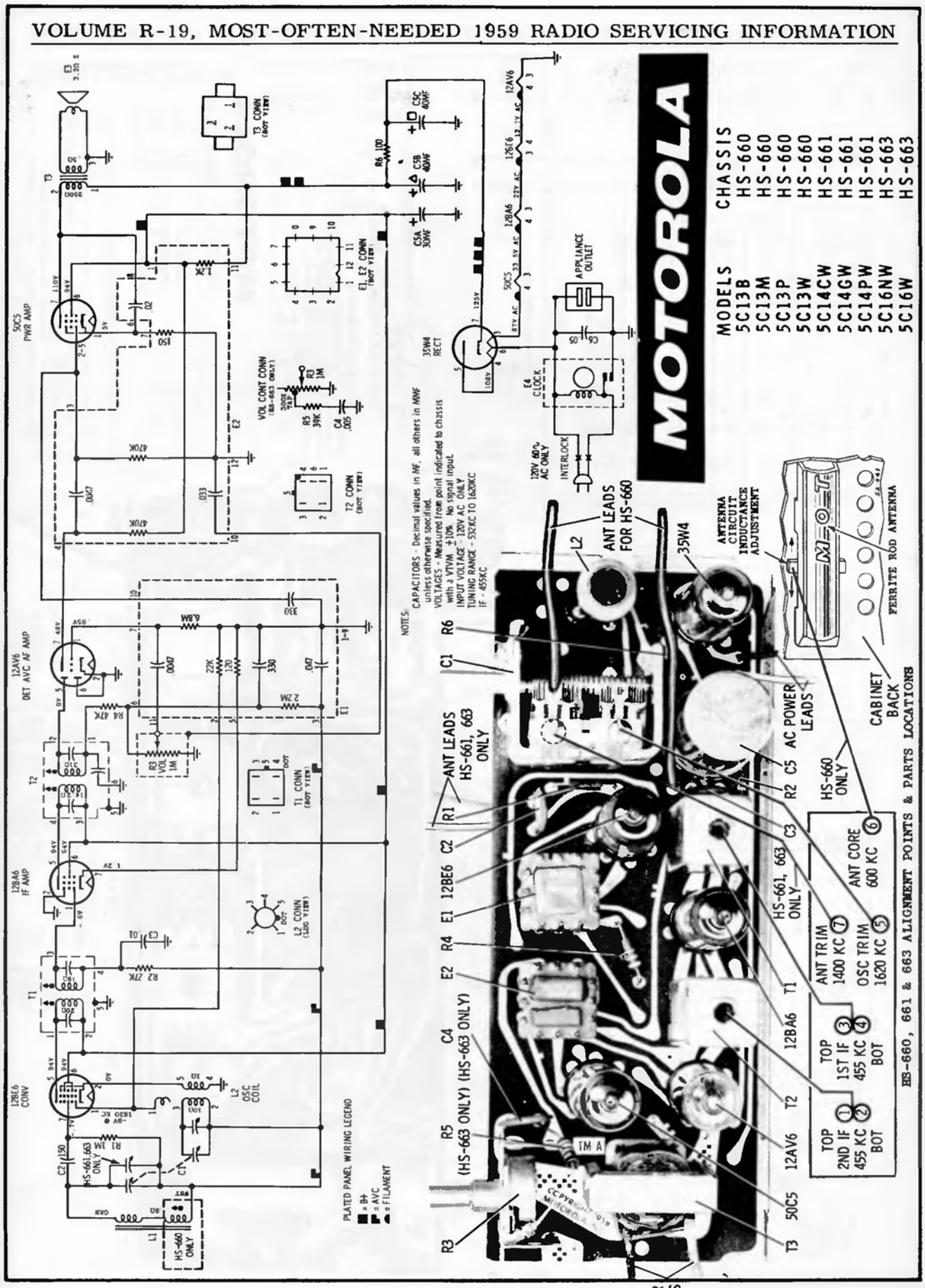
MOTOROLA
MODELS
5C13B
5C13M
5C13P
5C13W
5C14CW
5C14GW
5C14PW
5C16NW
5C16W
CHASSIS
HS-660
HS-660
HS-660
HS-660
HS-661
HS-661
HS-661
HS-663
HS-663
NOTES:
CAPACITORS - Decimal values in MF, all others in MMF unless otherwise specified.
VOLTAGES - Measured from point indicated to chassis with a VTVM. ±10%. No signal input.
INPUT VOLTAGE - 120V AC ONLY
TUNING RANGE - 532KC TO 1620KC
IF - 455KC
PLATED PANEL WIRING LEGEND
= B+
= AVC
= FILAMENT
50C5 PWR AMP
12AV6 DET AVC AF AMP
12BA6 IF AMP
12BE6 CONV
35W4 RECT
APPLIANCE OUTLET
E4 CLOCK
INTERLOCK
120V 60~ AC ONLY
VOL CONT CONN (HS-663 ONLY)
T1 CONN (BOT VIEW)
T2 CONN (BOT VIEW)
T3 CONN (BOT VIEW)
E1, E2 CONN (BOT VIEW)
L2 CONN (LOC VIEW)
L2 OSC COIL
HS-661, 663 ONLY
HS-660 ONLY
ANT LEADS FOR HS-660
ANTENNA CIRCUIT INDUCTANCE ADJUSTMENT
FERRITE ROD ANTENNA
CABINET BACK
AC POWER LEADS
ANT LEADS HS-661, 663 ONLY
C4 (HS-663 ONLY)
R5 (HS-663 ONLY)
SPKR LEADS
ANT CORE 600 KC
ANT TRIM 1400 KC
OSC TRIM 1620 KC
TOP 1ST IF 455 KC BOT
TOP 2ND IF 455 KC BOT
HS-660, 661 & 663 ALIGNMENT POINTS & PARTS LOCATIONS

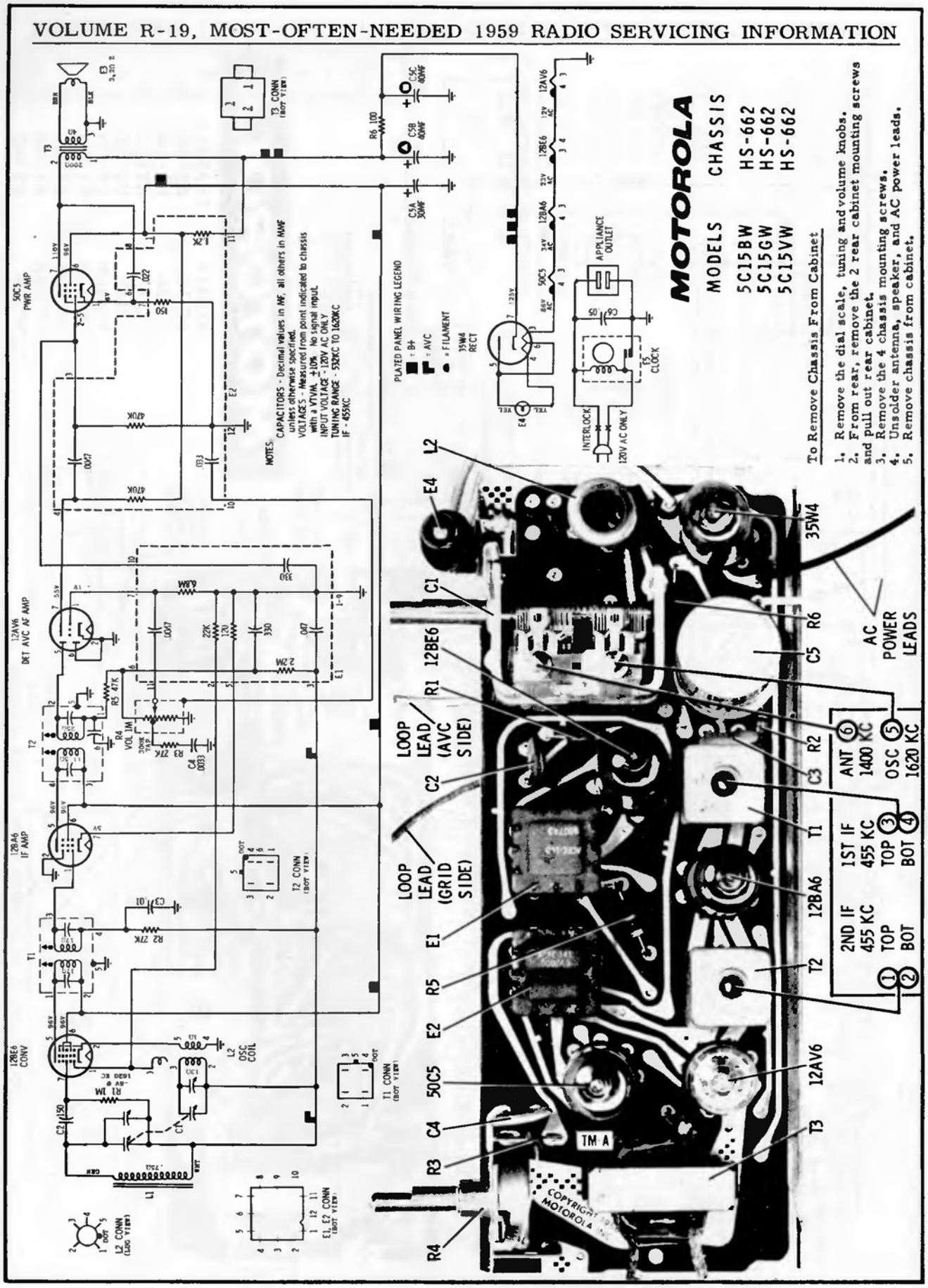
MOTOROLA
MODELS CHASSIS
5C15BW HS-662
5C15GW HS-662
5C15VW HS-662
To Remove Chassis From Cabinet
1. Remove the dial scale, tuning and volume knobs.
2. From rear, remove the 2 rear cabinet mounting screws and pull out rear cabinet.
3. Remove the 4 chassis mounting screws.
4. Unsolder antenna, speaker, and AC power leads.
5. Remove chassis from cabinet.
NOTES.
CAPACITORS - Decimal values in MF, all others in MMF unless otherwise specified.
VOLTAGES - Measured from point indicated to chassis with a VTVM. ±10%. No signal input.
INPUT VOLTAGE - 120V AC ONLY
TUNING RANGE - 532KC TO 1620KC
IF - 455KC
PLATED PANEL WIRING LEGEND
= B+
= AVC
= FILAMENT
50C5 PWR AMP
12AV6 DET AVC AF AMP
12BA6 IF AMP
12BE6 CONV
35W4 RECT
APPLIANCE OUTLET
INTERLOCK
120V AC ONLY
T5 CLOCK
T3 CONN (BOT VIEW)
T2 CONN (BOT VIEW)
T1 CONN (BOT VIEW)
E1, E2 CONN (BOT VIEW)
L2 CONN (LOOP VIEW)
L2 OSC COIL
L1
E4
L2
35W4
C1
R6
C5
R1
12BE6
LOOP LEAD (AVC SIDE)
C2
R2
C3
T1
LOOP LEAD (GRID SIDE)
E1
12BA6
R5
T2
E2
50C5
12AV6
C4
T3
R3
R4
AC POWER LEADS
ANT 1400 KC
OSC 1620 KC
1ST IF 455 KC
TOP
BOT
2ND IF 455 KC
TOP
BOT
TM A
COPYRIGHT MOTOROLA

# MOTOROLA

| MODELS | CHASSIS |
|---|---|
| 2F12N | HS-667 |
| 2F12W | HS-667 |

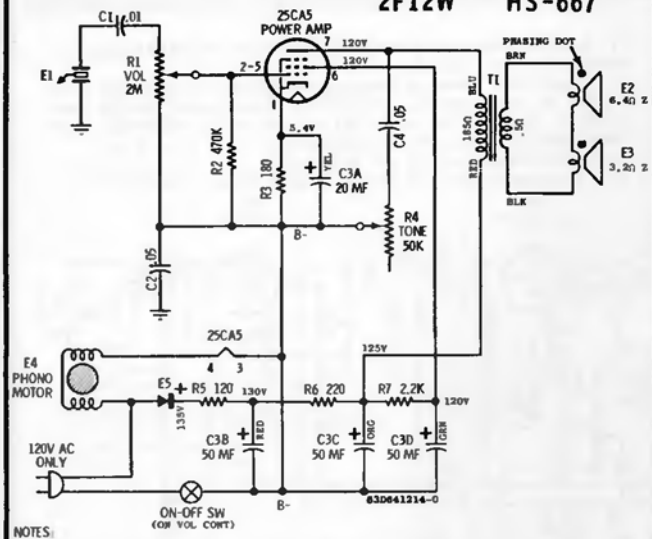


NOTES:
CAPACITORS - Decimal values in MF, all others in MMF unless otherwise specified.
VOLTAGES - Measured from point indicated to B- with a VTVM. ⏚ = CHASSIS

| MODELS | CHASSIS |
|---|---|
| 2F11B | HS-666 |
| 2F11R | HS-666 |

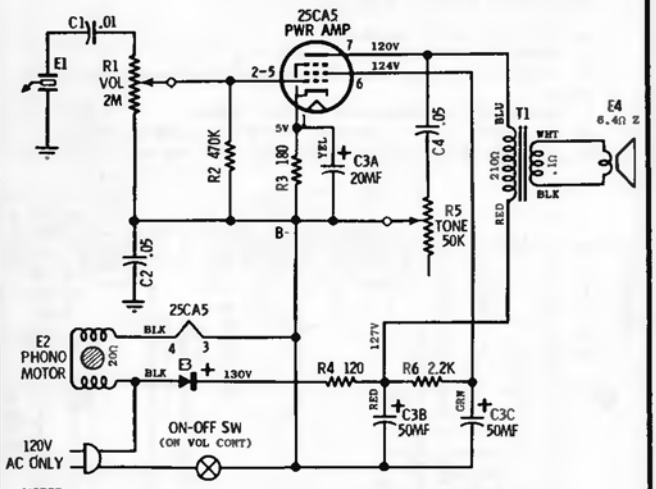


NOTES:
CAPACITORS - Decimal values in MF, all others in MMF unless otherwise specified.
VOLTAGES - Measured from point indicated to B- with a VTVM.
CHASSIS - ⏚

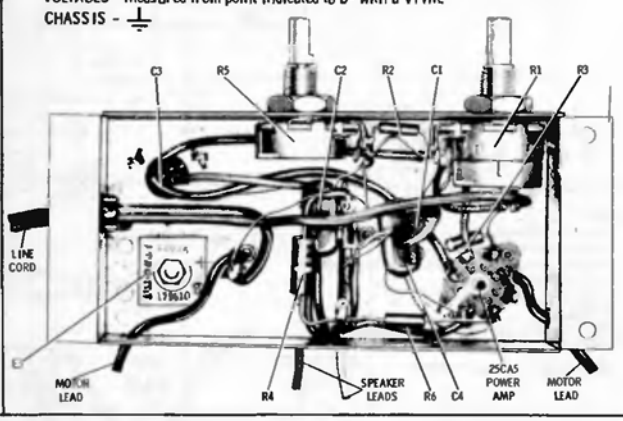


## DISASSEMBLY INSTRUCTIONS

### To Remove Chassis from Cabinet

1. Pull off two knobs from front of cabinet.
2. Remove four (4) motorboard and three (3) baffle retainer screws.
3. Remove baffle.
4. Lift rear of motorboard slightly and slide out.
5. Remove two screws which hold chassis to motorboard and remove chassis.

### To Remove Turntable

1. Remove "C" washer from spindle.
2. Remove turntable by pulling up - off of spindle.

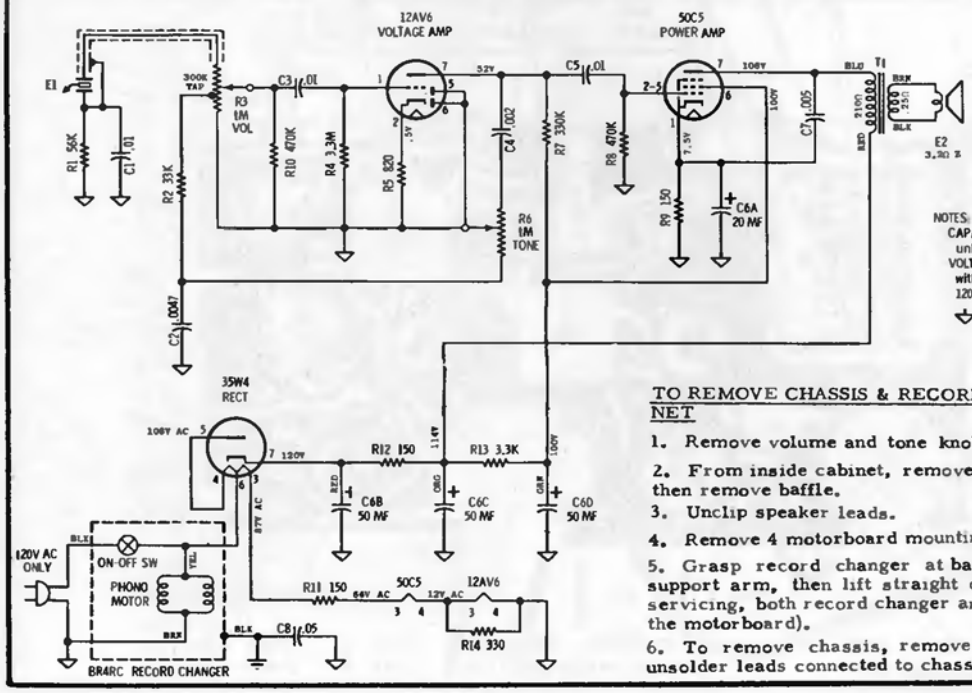


# MOTOROLA

| MODELS | CHASSIS |
|---|---|
| 3F13B | HS-668 |
| 3F13W | HS-668 |

NOTES:
CAPACITORS - Decimal values in MF, all others in MMF unless otherwise specified.
VOLTAGES - Measured from point indicated to B- with a VTVM, +10%. Line Voltage maintained at 120V AC.
⏚ = B- ⏚ = Chassis

### TO REMOVE CHASSIS & RECORD CHANGER FROM CABINET

1. Remove volume and tone knobs.
2. From inside cabinet, remove 3 baffle mounting screws, then remove baffle.
3. Unclip speaker leads.
4. Remove 4 motorboard mounting screws.
5. Grasp record changer at base of tone arm and record support arm, then lift straight out of cabinet (to facilitate servicing, both record changer and chassis are mounted on the motorboard).
6. To remove chassis, remove 4 chassis mounting nuts; unsolder leads connected to chassis if necessary.

# MOTOROLA

| MODELS | CHASSIS |
|---|---|
| 5R14N | HS-670 |

## To Remove Chassis From Cabinet

1. Pull off control knobs.
2. Remove 3 antenna panel mounting screws.
3. Remove antenna panel (disconnect line cord from interlock).
4. Disconnect antenna and speaker leads.
5. Remove 4 record changer board mounting screws.
6. Lift changer and mounting board up and out of the way.
7. Loosen 2 screws which hold interlock to cabinet; remove interlock from cabinet.
8. "Uncrimp" ends of chassis mounting brackets and melt solder at these points. CAUTION: Apply only enough heat to allow chassis to slide out of brackets; too much heat may damage the plated circuit board.
9. Slide chassis out of the brackets.
10. Disconnect record changer leads from chassis.

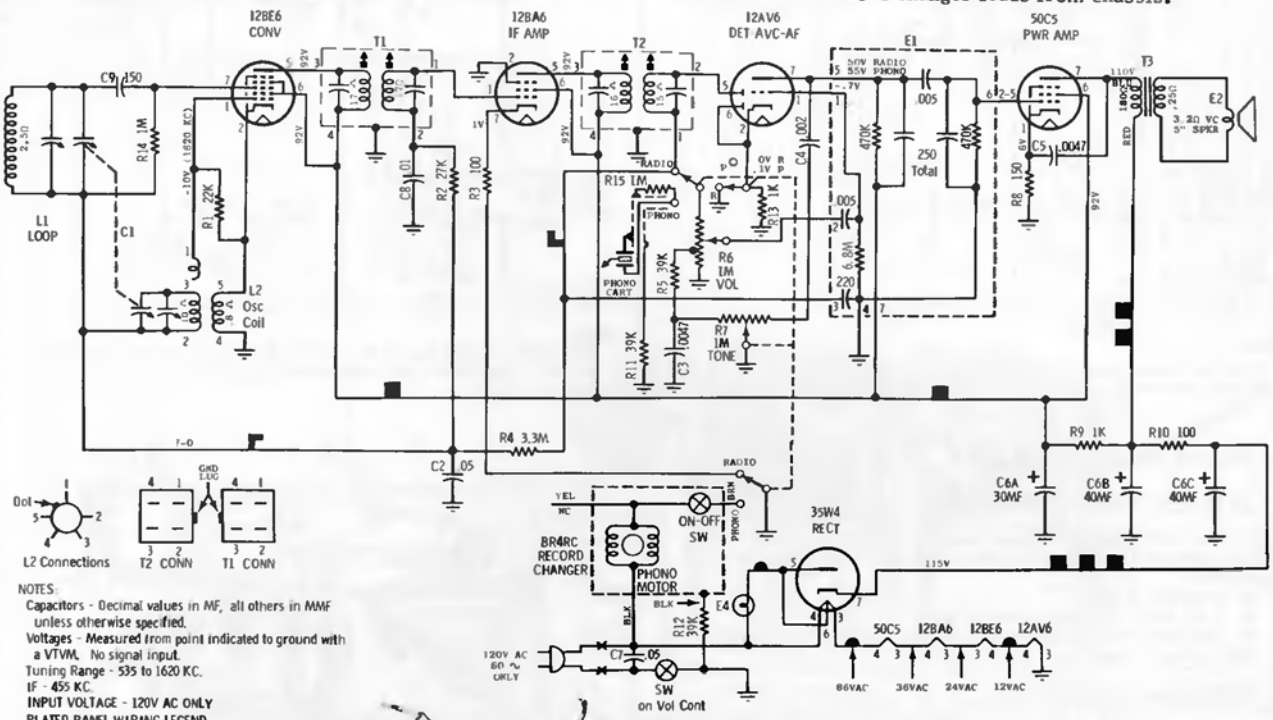


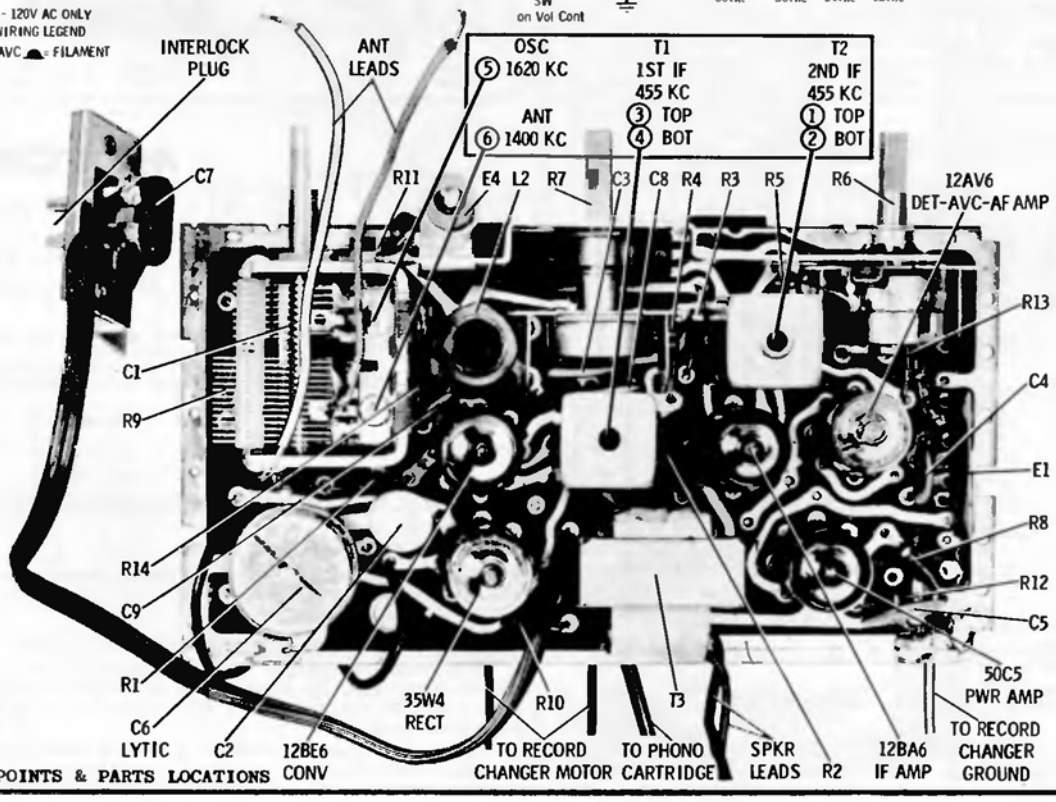


ALIGNMENT POINTS & PARTS LOCATIONS

# MOTOROLA

| MODELS | CHASSIS |
|---|---|
| 5K11B | HS-673 |
| 5K11M | HS-673 |
| 5K11MC | HS-673 |
| 5K11W | HS-673 |

NOTES:

CAPACITORS - Decimal values in MF, all others in MMF unless otherwise specified.
VOLTAGES - Measured from point indicated to chassis with a VTVM, ±10%. No signal in.
S1 & S2 conn details viewed from indicated sides with arrow indicating clockwise rotation as viewed from front of control.

S1 SHOWN IN PHONO POSITION (RIAA)
S2 SHOWN IN EXT SPKR POSITION

⏚ = Chassis  ⏚ = Record changer base

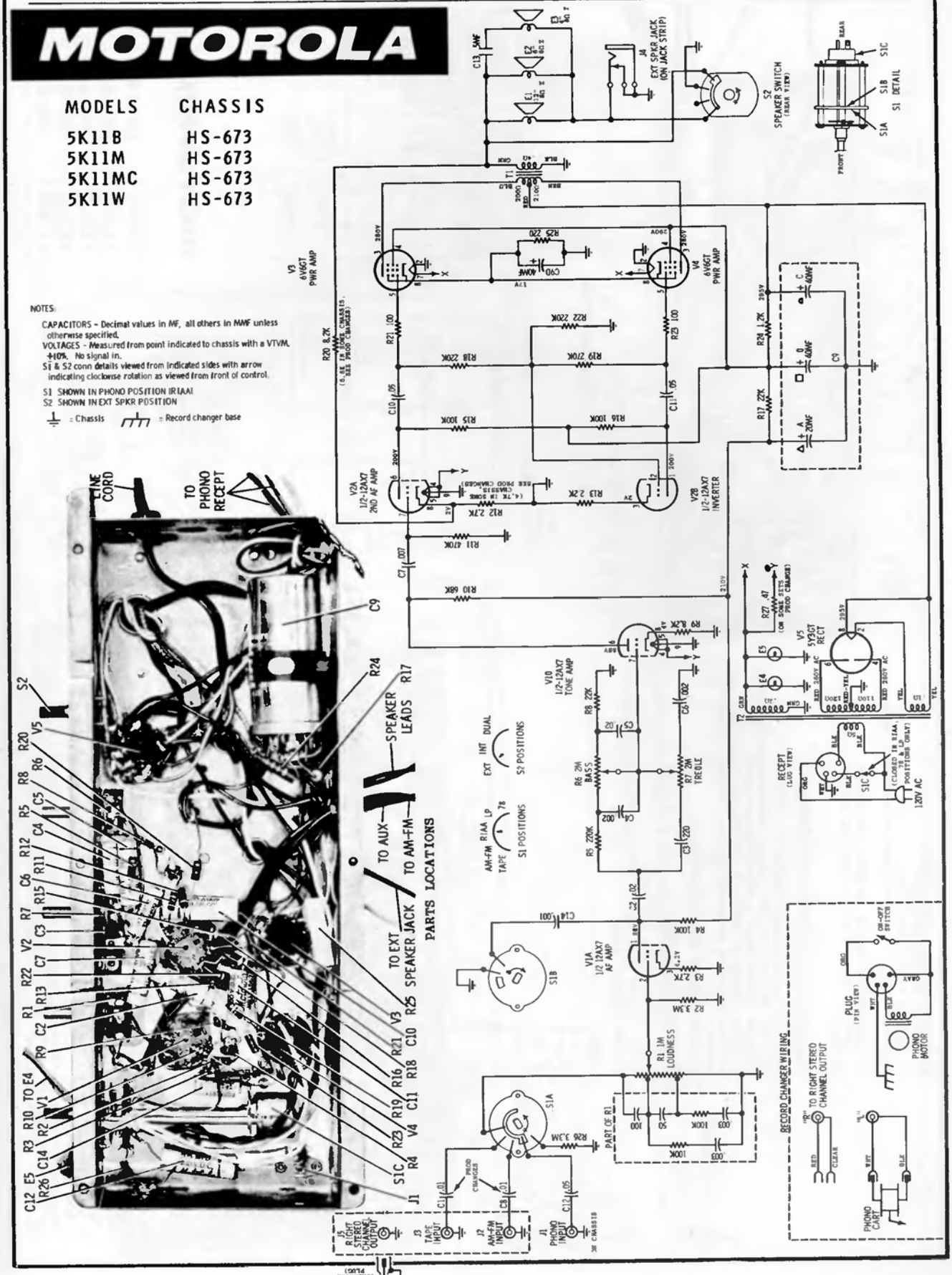

**To Remove Chassis From Cabinet**

1. Pull off the control knobs.
2. Remove cabinet back cover.
3. Disconnect leads from changer, auxiliary jacks and speakers.
4. Remove light shield and pilot light socket.
5. Remove three chassis mounting screws and remove chassis.

**To Remove Record Changer From Cabinet**

1. Remove back cover.
2. Disconnect all changer leads.
3. Turn the two record changer mounting screws fully clockwise (down flush against changer base).
4. From bottom of changer, turn the two Tinnerman nuts located at mounting screw ends so they are parallel with the screws.
5. Grasp changer by base and lift up.

**To Replace Pilot Lights**

1. To replace pilot light in record changer compartment, remove light shield, then bulb.
2. To remove pilot light on chassis, first remove chassis (see above), then bulb.

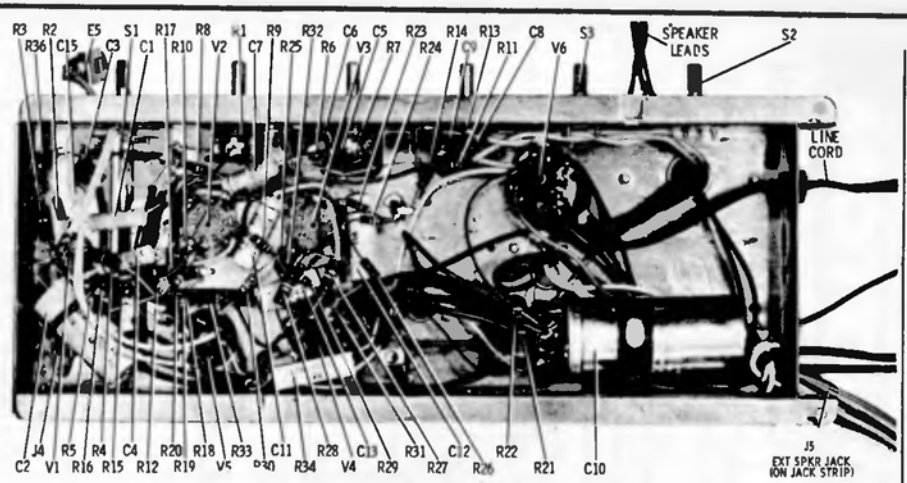


PARTS LOCATIONS

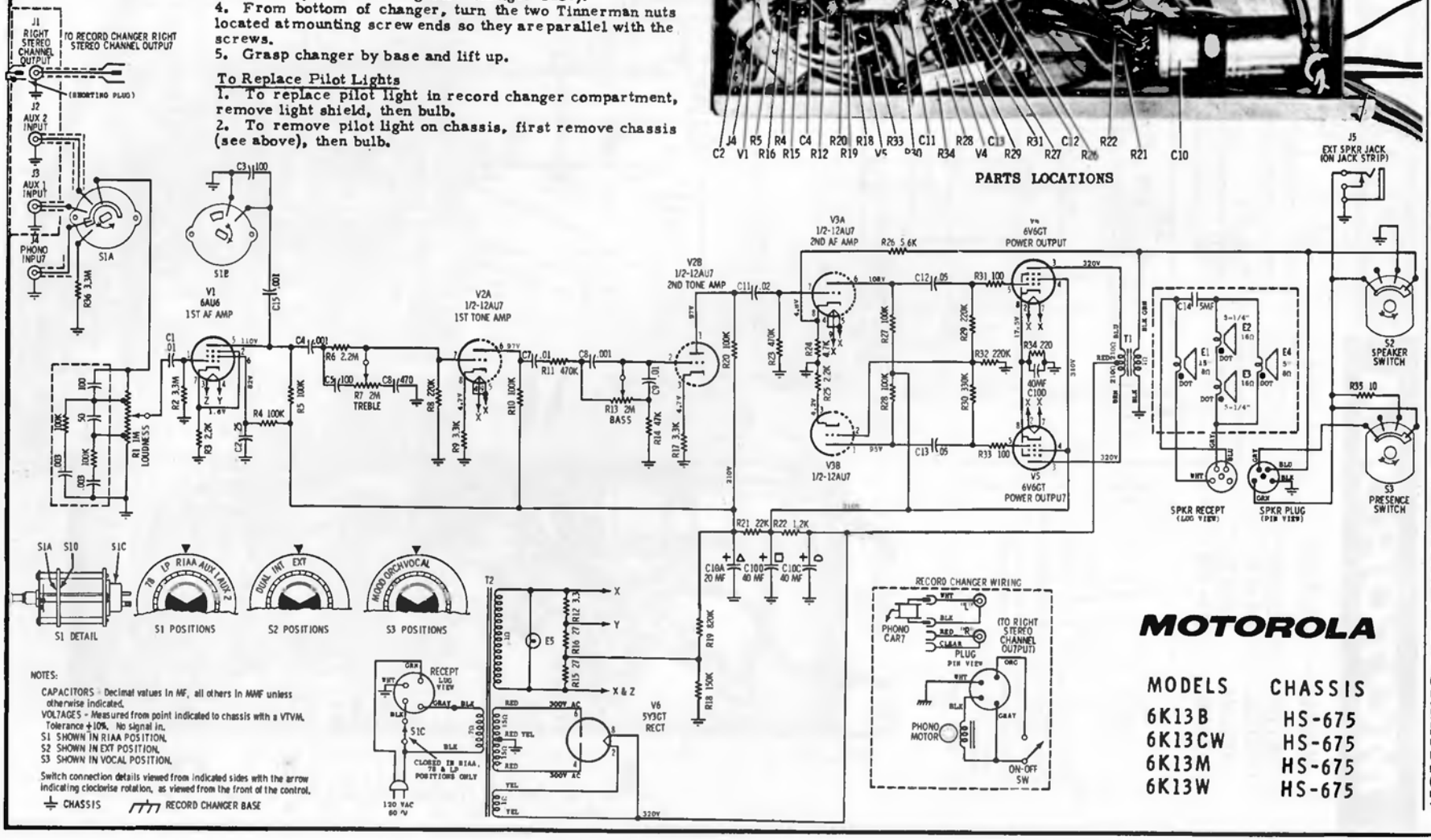


NOTES:

CAPACITORS - Decimal values in MF, all others in MMF unless otherwise indicated.
VOLTAGES - Measured from point indicated to chassis with a VTVM. Tolerance ±10%. No signal in.
S1 SHOWN IN RIAA POSITION.
S2 SHOWN IN EXT POSITION.
S3 SHOWN IN VOCAL POSITION.

Switch connection details viewed from indicated sides with the arrow indicating clockwise rotation, as viewed from the front of the control.

⏚ CHASSIS  RECORD CHANGER BASE

**MOTOROLA**

| MODELS | CHASSIS |
|---|---|
| 6K13B | HS-675 |
| 6K13CW | HS-675 |
| 6K13M | HS-675 |
| 6K13W | HS-675 |

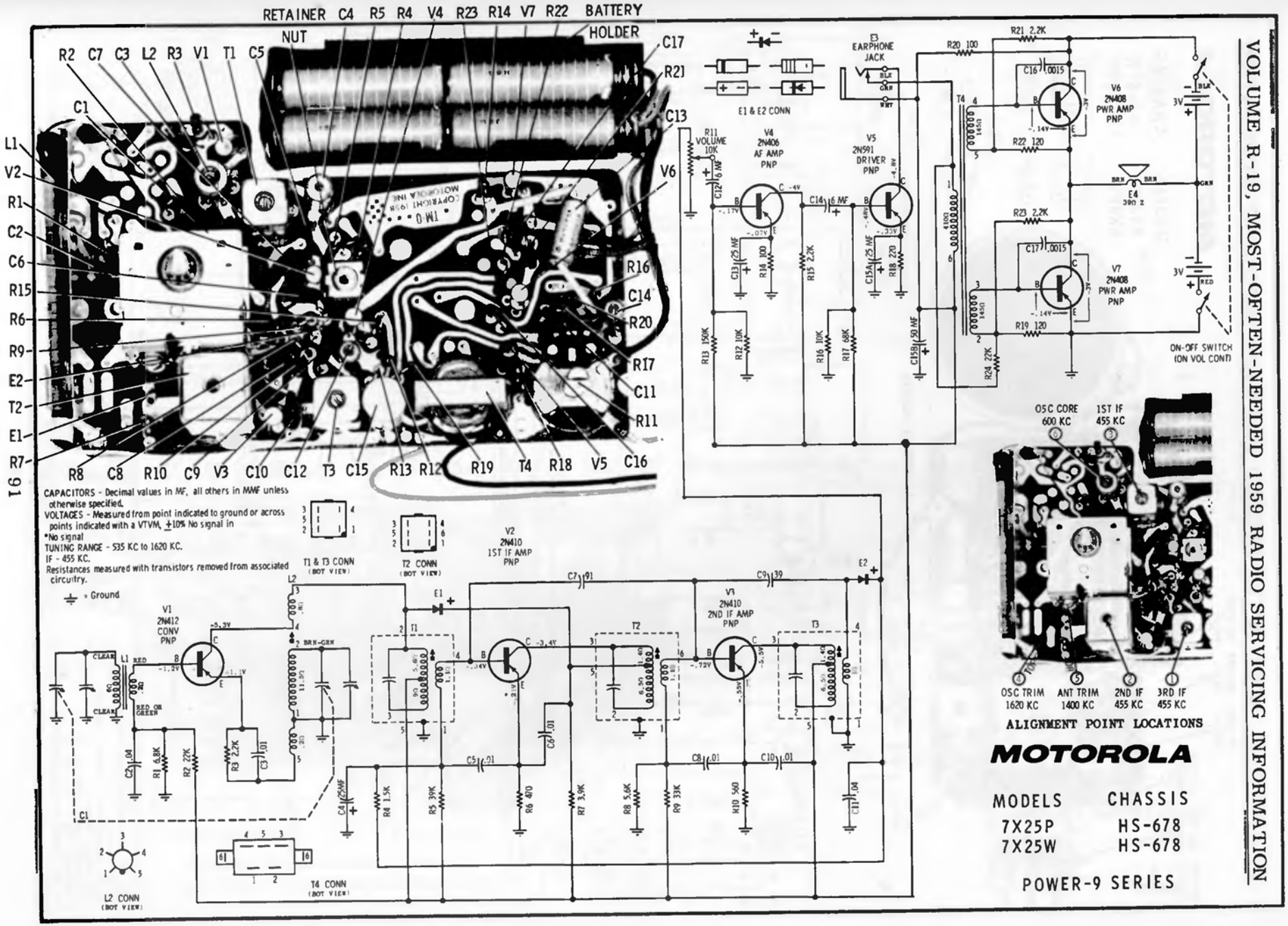


**MOTOROLA**

| MODELS | CHASSIS |
|---|---|
| 7X25P | HS-678 |
| 7X25W | HS-678 |

POWER-9 SERIES

# MOTOROLA

| MODELS | CHASSIS |
|---|---|
| 8X26E | HS-679 |
| 8X26S | HS-679 |

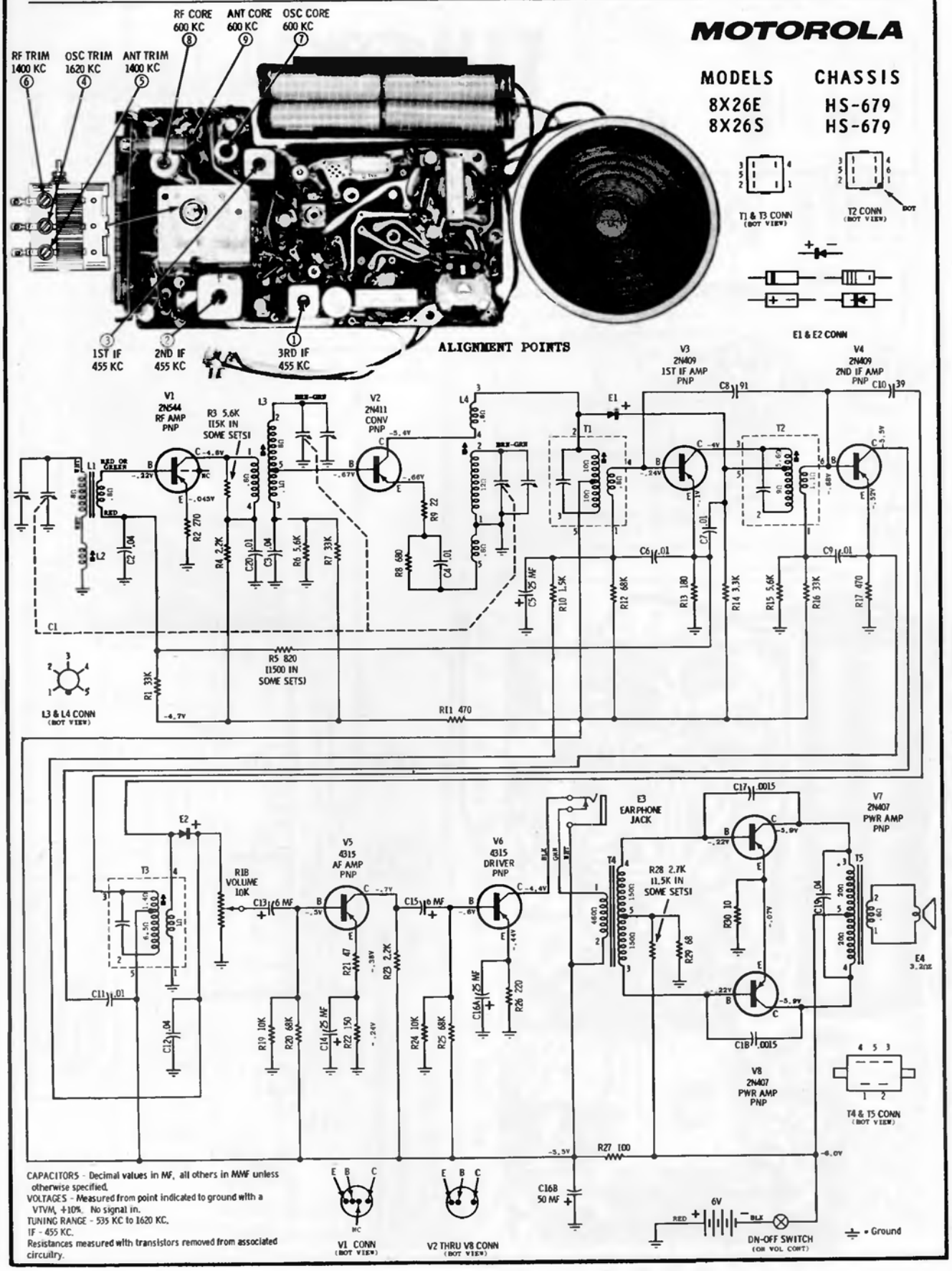


CAPACITORS - Decimal values in MF, all others in MMF unless otherwise specified.
VOLTAGES - Measured from point indicated to ground with a VTVM, ±10%. No signal in.
TUNING RANGE - 535 KC to 1620 KC.
IF - 455 KC.
Resistances measured with transistors removed from associated circuitry.

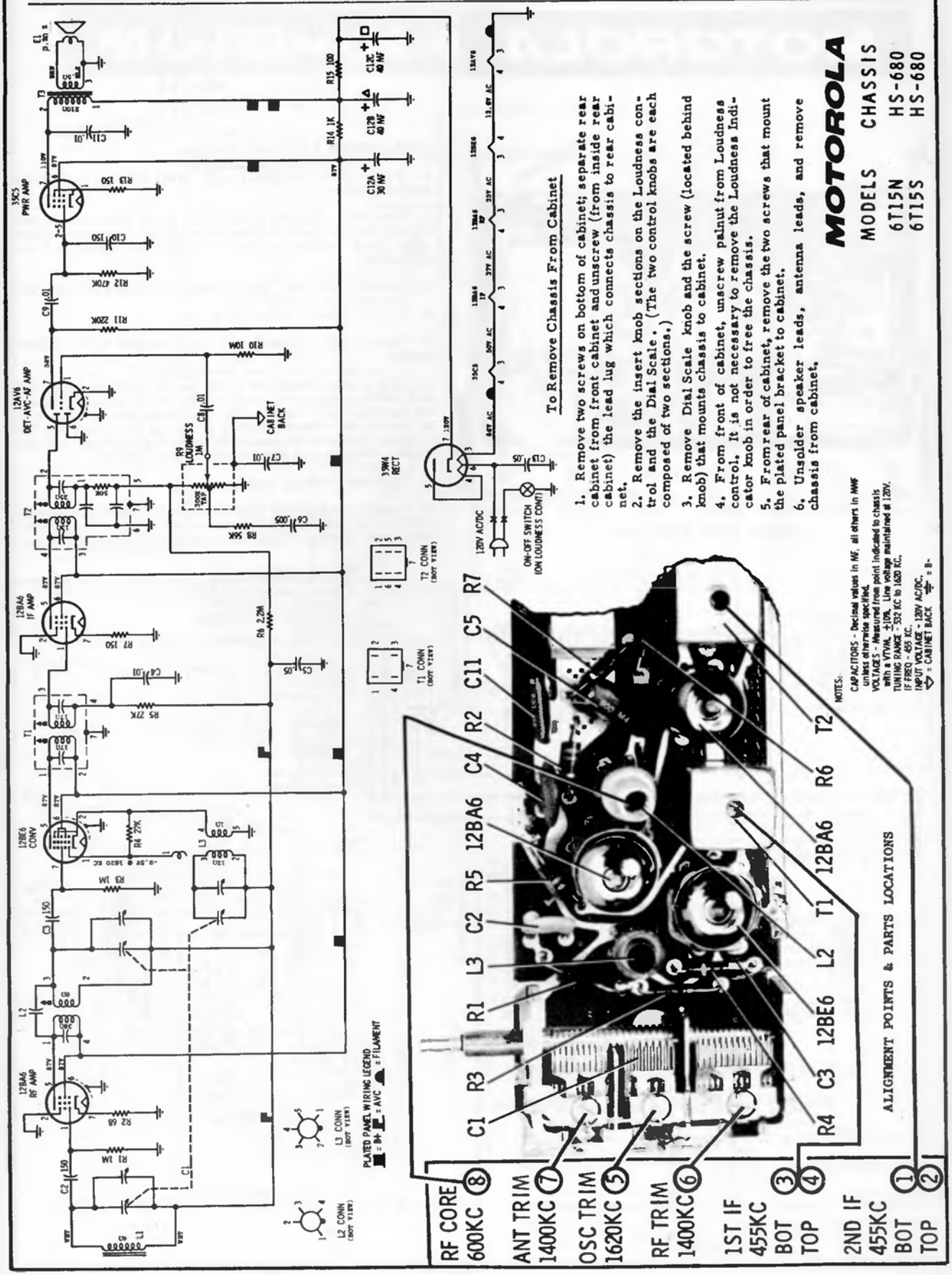


To Remove Chassis From Cabinet

1. Remove two screws on bottom of cabinet; separate rear cabinet from front cabinet and unscrew (from inside rear cabinet) the lead lug which connects chassis to rear cabinet.
2. Remove the insert knob sections on the Loudness control and the Dial Scale. (The two control knobs are each composed of two sections.)
3. Remove Dial Scale knob and the screw (located behind knob) that mounts chassis to cabinet.
4. From front of cabinet, unscrew palnut from Loudness control. It is not necessary to remove the Loudness Indicator knob in order to free the chassis.
5. From rear of cabinet, remove the two screws that mount the plated panel bracket to cabinet.
6. Unsolder speaker leads, antenna leads, and remove chassis from cabinet.

**MOTOROLA**

| MODELS | CHASSIS |
|---|---|
| 6T15N | HS-680 |
| 6T15S | HS-680 |

# MOTOROLA

| MODELS | CHASSIS |
|---|---|
| 7X23E | HS-688 |
| 7X24S | HS-688 |
| 7X24W | HS-688 |

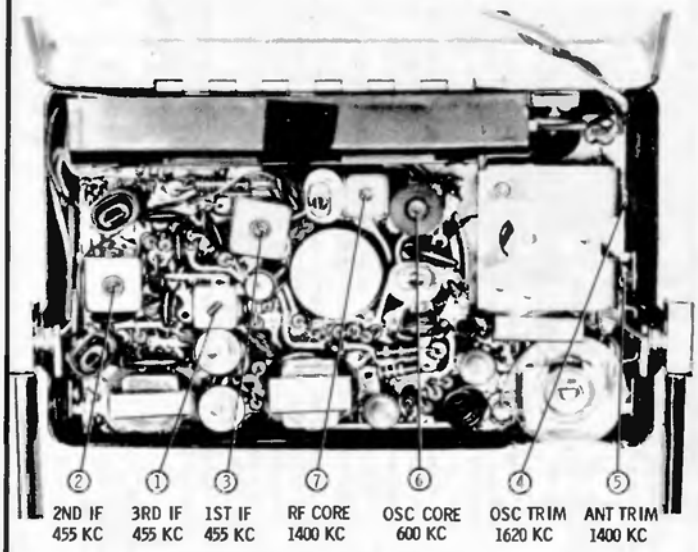


ALIGNMENT POINT LOCATIONS

## ESCUTCHEON & CHASSIS REMOVAL

1. From inside cabinet (below gang) remove escutcheon mounting screw.

2. Remove escutcheon by inserting small screwdriver into detent on edge of escutcheon and prying up. Work escutcheon free (use caution to prevent scratching cabinet and escutcheon.)

3. Remove dial and tuning knobs by pulling straight off.

4. Remove chassis mounting screw.

5. Turn handle perpendicular to component side of plated panel.

6. Grasp handle near one of its two mounting bushings and pull out from side of cabinet until the round portion of mounting bushing clears hole in side of cabinet, then lift this side of handle and chassis slightly out of cabinet. Perform the same procedure on the other mounting bushing, then lift handle, chassis and speaker plate out of cabinet.

7. Unscrew earphone jack.

8. Separate the plated chassis from the speaker mounting plate as follows: unsolder the wire that connects the gang to the plated chassis. Unsolder speaker lug, green lead from

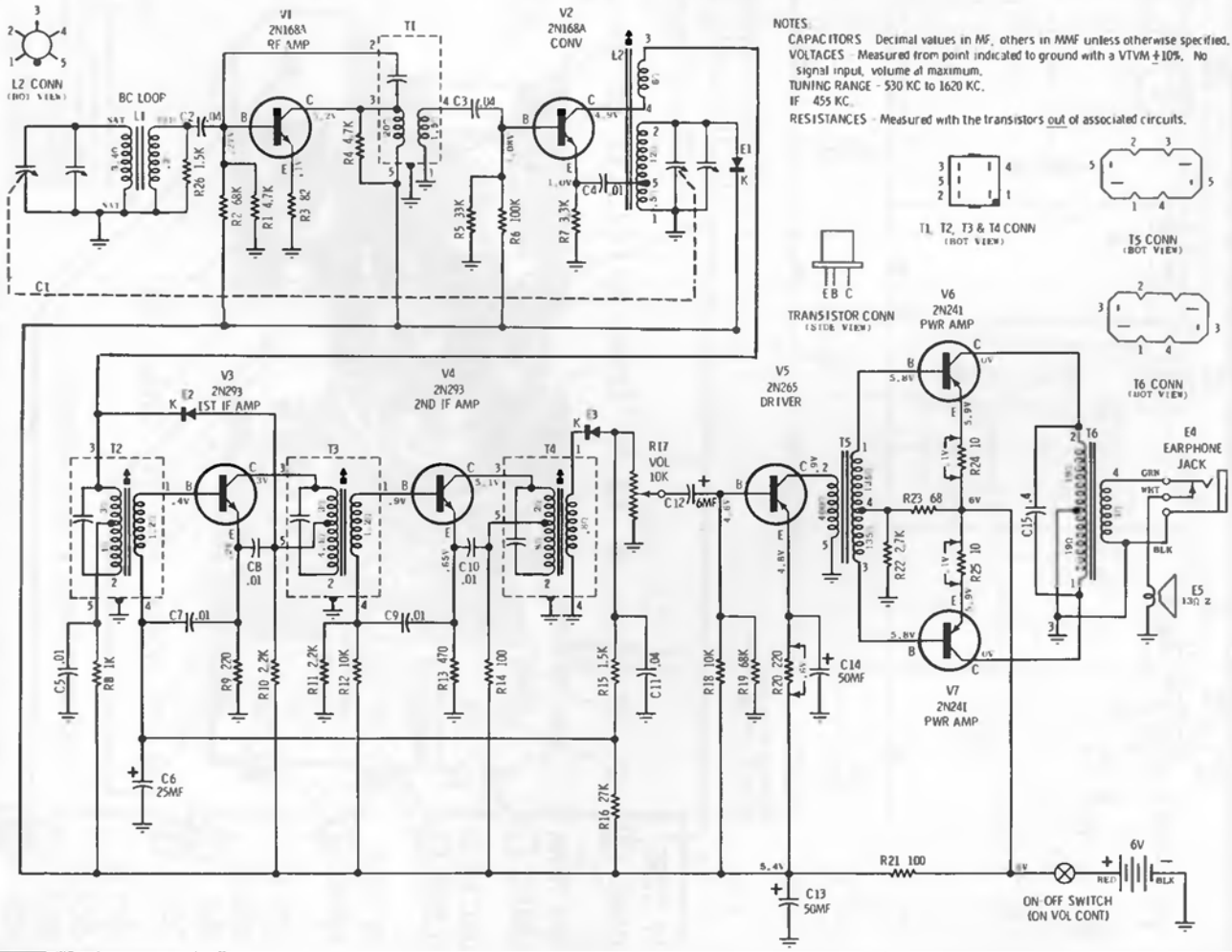

# MOTOROLA

| MODELS | CHASSIS |
|---|---|
| SF11B | HS-703 |
| SF11N | HS-703 |

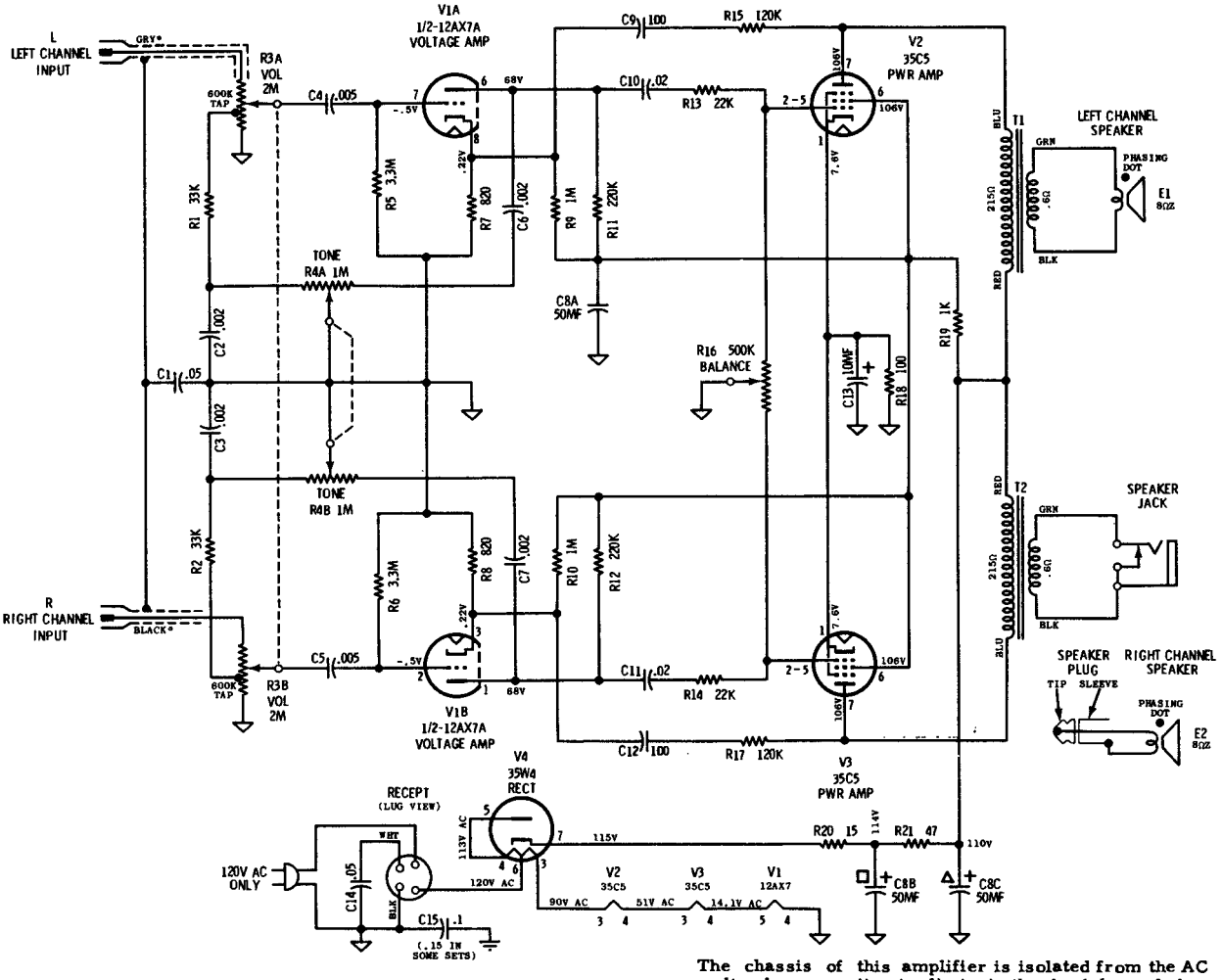


NOTES:
CAPACITORS - Decimal values in MF, all others in MMF unless otherwise specified.
VOLTAGES - Measured from point indicated to B- with a VTVM. ±10%. No signal in.
⏚ = B- ⏚ = Chassis ⏚ = Record changer frame
*On some units, the phono input cable colors were reversed.

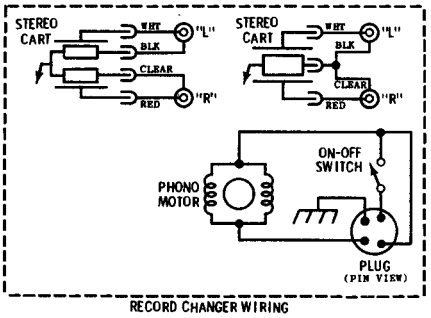

RECORD CHANGER WIRING

The chassis of this amplifier is isolated from the AC power line by a capacitor to eliminate the shock hazard when handling the chassis. However, as an additional precaution, when servicing this amplifier, an isolation transformer should be inserted between the power line and the chassis.

## TO REMOVE CHASSIS FROM CABINET

1. Remove 3 control knobs.
2. Remove 3 baffle mounting screws and unscrew speaker jack mounted on baffle; then remove baffle.
3. Remove record changer mounting board screws.
4. Lift mounting board and record changer high enough to permit access to bottom of changer.
5. Unplug phono cables connected to record changer "R" and "L" jacks, also unplug phono power plug.
6. Remove 4 chassis mounting nuts.
7. Unsolder speaker leads.
8. Remove chassis from cabinet.

## TO REMOVE RECORD CHANGER FROM CABINET

1. Remove 3 baffle mounting screws and unscrew speaker jack mounted on baffle; then remove baffle.
2. Remove record changer mounting board screws.
3. Lift mounting board and record changer high enough to permit access to bottom of changer.
4. Unplug phono cables connected to record changer "R" and "L" jacks, also unplug phono power plug.
5. Turn the two record changer mounting screws fully clockwise (down flush against changer base).
6. Place clips, located at ends of record changer mounting screws, so that they are parallel with the screws.
7. Remove record changer from cabinet.

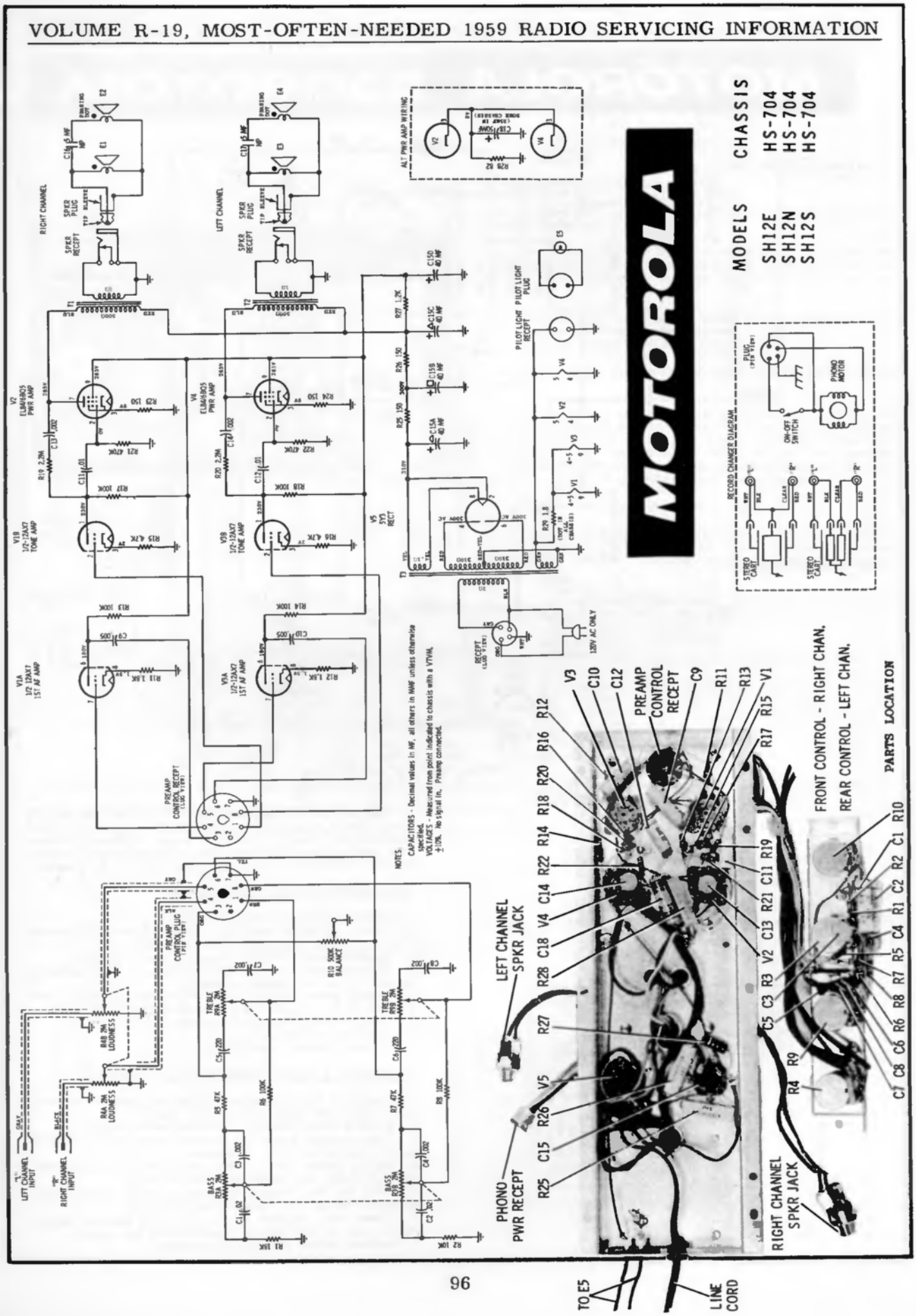
MOTOROLA
MODELS
SH12E
SH12N
SH12S
CHASSIS
HS-704
HS-704
HS-704
RIGHT CHANNEL
LEFT CHANNEL
SPKR RECEPT
SPKR PLUG
V2 EL86/6BQ5 PWR AMP
V4 EL86/6BQ5 PWR AMP
V1B 1/2-12AX7 TONE AMP
V3B 1/2-12AX7 TONE AMP
V1A 1/2 12AX7 1ST AF AMP
V3A 1/2-12AX7 1ST AF AMP
V5 5Y3 RECT
PILOT LIGHT RECEPT
PILOT LIGHT PLUG
ALT PWR AMP WIRING
RECORD CHANGER DIAGRAM
PHONO MOTOR
ON-OFF SWITCH
STEREO CART
PREAMP CONTROL RECEPT
PREAMP CONTROL PLUG
LEFT CHANNEL INPUT
RIGHT CHANNEL INPUT
LOUDNESS
BASS
TREBLE
BALANCE
120V AC ONLY
NOTES:
CAPACITORS - Decimal values in MF, all others in MMF unless otherwise specified.
VOLTAGES - Measured from point indicated to chassis with a VTVM. ±10%. No signal in. Preamp connected.
PARTS LOCATION
FRONT CONTROL - RIGHT CHAN.
REAR CONTROL - LEFT CHAN.
PREAMP CONTROL RECEPT
LEFT CHANNEL SPKR JACK
PHONO PWR RECEPT
RIGHT CHANNEL SPKR JACK
TO E5
LINE CORD

# MOTOROLA

| MODELS | CHASSIS |
|---|---|
| SK21B, M | HS-735 |
| SK23B, CW, M | HS-735 |
| S21B, CW, M | - |

Models SK21 and SK23 are console stereophonic phonographs containing four-speed record changers with stereophonic cartridge and multiple speaker systems. These models differ from each other in type of record changer used and cabinet design. Model S21 is the right channel speaker system used with SK21 and SK23 to complete the stereophonic system.

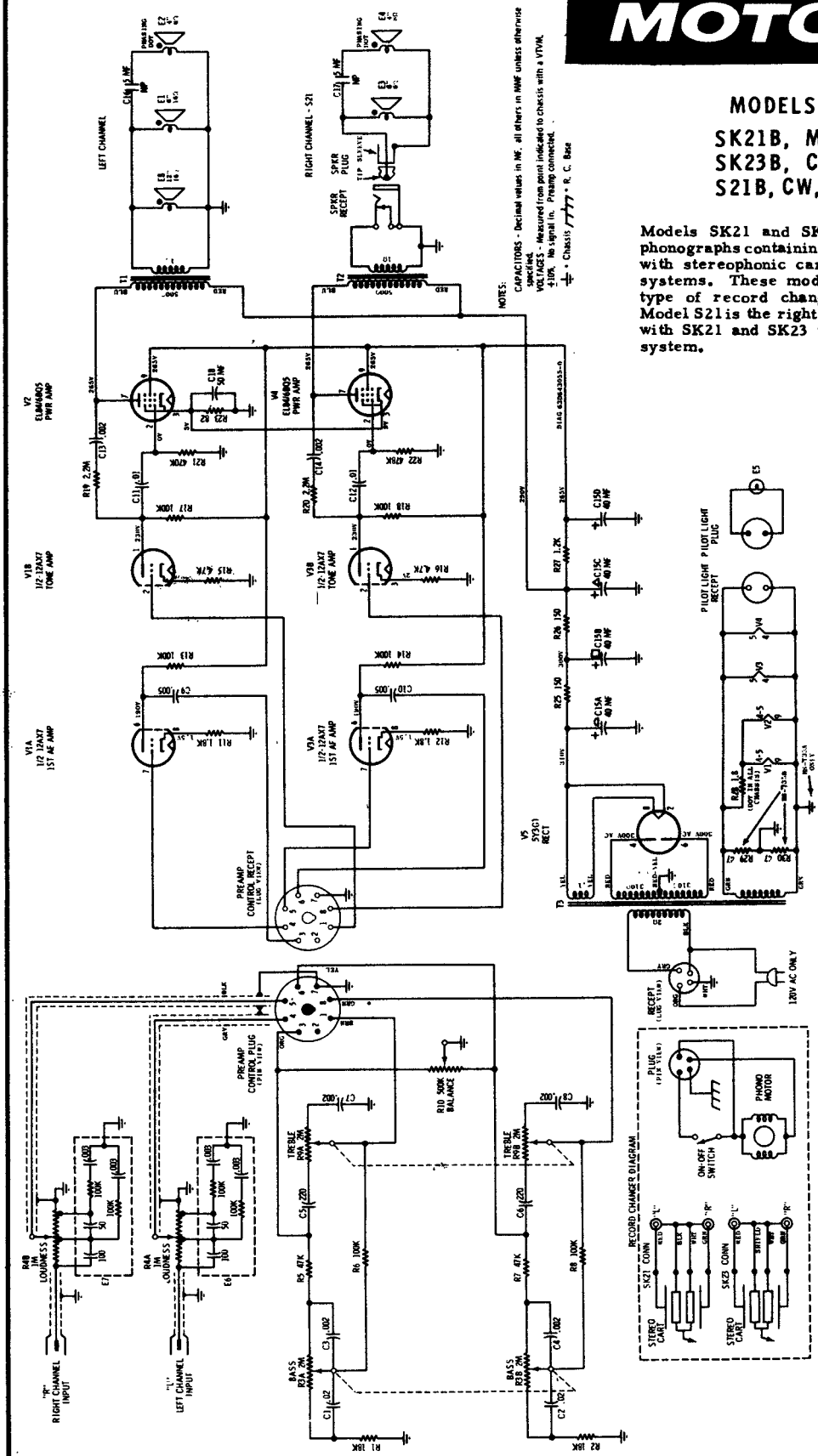


## To Remove Record Changer from Cabinet (SK23 Series)

1. Remove back cover.
2. Disconnect all changer leads.
3. Turn two record changer mounting screws fully clockwise.
4. From bottom of changer, turn the two mounting clips located at mounting screw ends so they are parallel with the screws.
5. Grasp changer by base and lift up.

## To Replace Pilot Light (All Models)

1. Remove cabinet rear cover.
2. From inside cabinet, unclip pilot light socket from mounting bracket.
3. Remove pilot light.

## DISASSEMBLY INSTRUCTIONS

### To Remove Chassis from Cabinet (All Models)

1. Pull off control knobs.
2. Remove cabinet back cover.
3. Disconnect all leads from changer and speakers.
4. Unplug pilot light at chassis.
5. Unplug control plug at chassis.
6. Remove nut from output jack and remove jack from mounting bracket.
7. Remove chassis mounting screw and slide chassis out rear of cabinet.
8. Remove 2 nuts from control unit mounting screws.
9. Remove control unit.

# Olympic MODEL 688

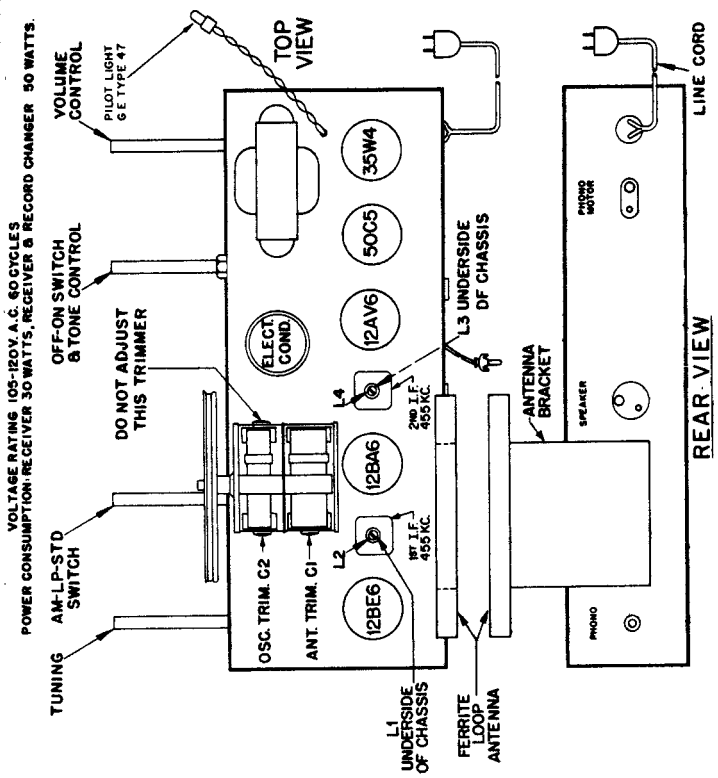


**ALIGNMENT:**

Equipment required: Modulated RF signal generator; output meter; insulated screw-driver; two .1 mfd 400 volt condensers.

To insure proper alignment, a radiated signal will be required during part of the alignment procedure. To radiate a signal, connect a loop of about 6 inches in diameter (one turn of #14 or #12 wire) across the output of the signal generator, and place this loop perpendicular to the Ferrite stick antenna of the receiver to be aligned, at a distance of about 10 or 12 inches.

Connect the output meter and signal generator as follows:

Output meter: Connect across the speaker voice coil and turn the volume control to maximum (extreme clockwise position).

ALIGNMENT PROCEDURE CHART

| STEP | CONNECT HIGH SIDE OF SIGNAL GENERATOR TO - | SET SIGNAL GENERATOR TO - | TURN RECEIVER DIAL TO - | ADJUST THE FOLLOWING FOR MAXIMUM OUTPUT. (KEEP SIGNAL FROM SIGNAL GENERATOR AS LOW AS POSSIBLE.) |
|---|---|---|---|---|
| 1 | ANTENNA SECTION TUNING CONDENSER IN SERIES WITH 1 MFD. COND. | 455 KC. | FULL CLOCKWISE POSITION. (CONDENSER PLATES FULLY OPEN) | L4, L3, L2, L1 AND REPEAT IN SAME ORDER (1ST. AND 2ND. I.F. TRANSFORMERS) |
| 2 | USE RADIATED SIGNAL | 1500 KC. | 1500 KC. (150 ON DIAL) | C2 (OSCILLATOR) |
| 3 | | 1500 KC | MAXIMUM SIGNAL (APPROX. 150 ON DIAL) | C1 (ANTENNA) |
| 4 | | | REPEAT STEPS 2 AND 3 | |

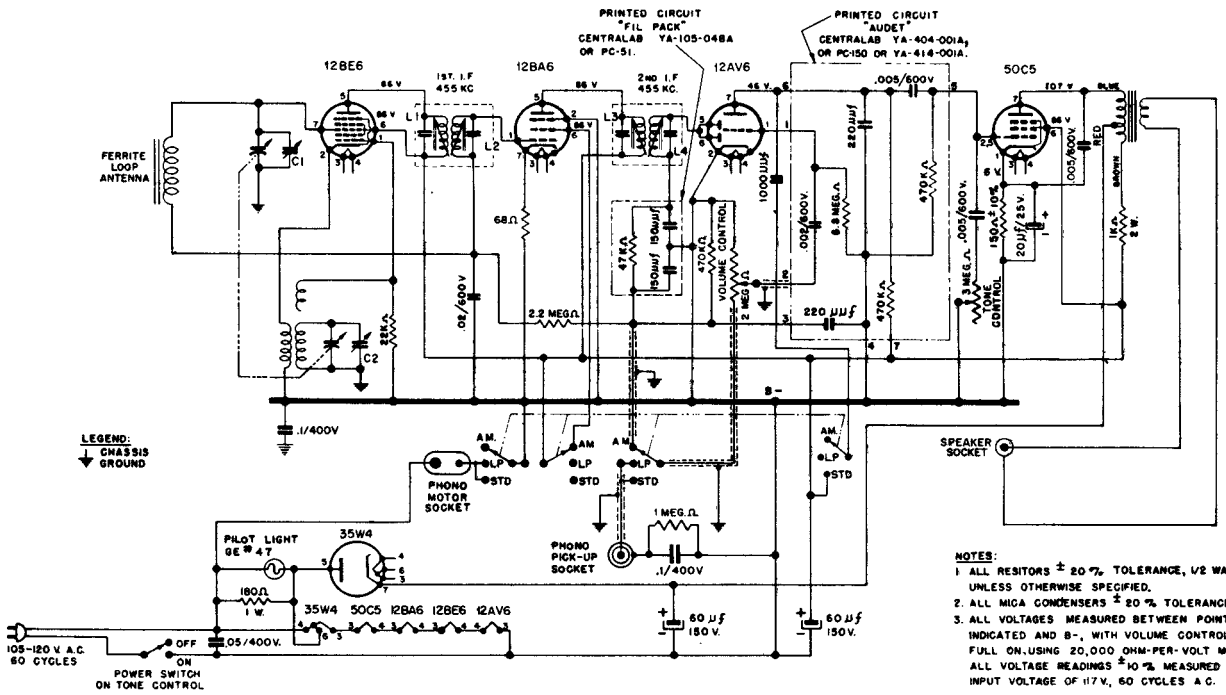


NOTES:
1. ALL RESITORS ± 20 % TOLERANCE, 1/2 WATT, UNLESS OTHERWISE SPECIFIED.
2. ALL MICA CONDENSERS ± 20 % TOLERANCE.
3. ALL VOLTAGES MEASURED BETWEEN POINTS INDICATED AND B-, WITH VOLUME CONTROL FULL ON. USING 20,000 OHM-PER-VOLT METER. ALL VOLTAGE READINGS ± 10 % MEASURED WITH INPUT VOLTAGE OF 117 V., 60 CYCLES A.C.

# PACKARD BELL

## TABLE MODEL RADIO 5R5

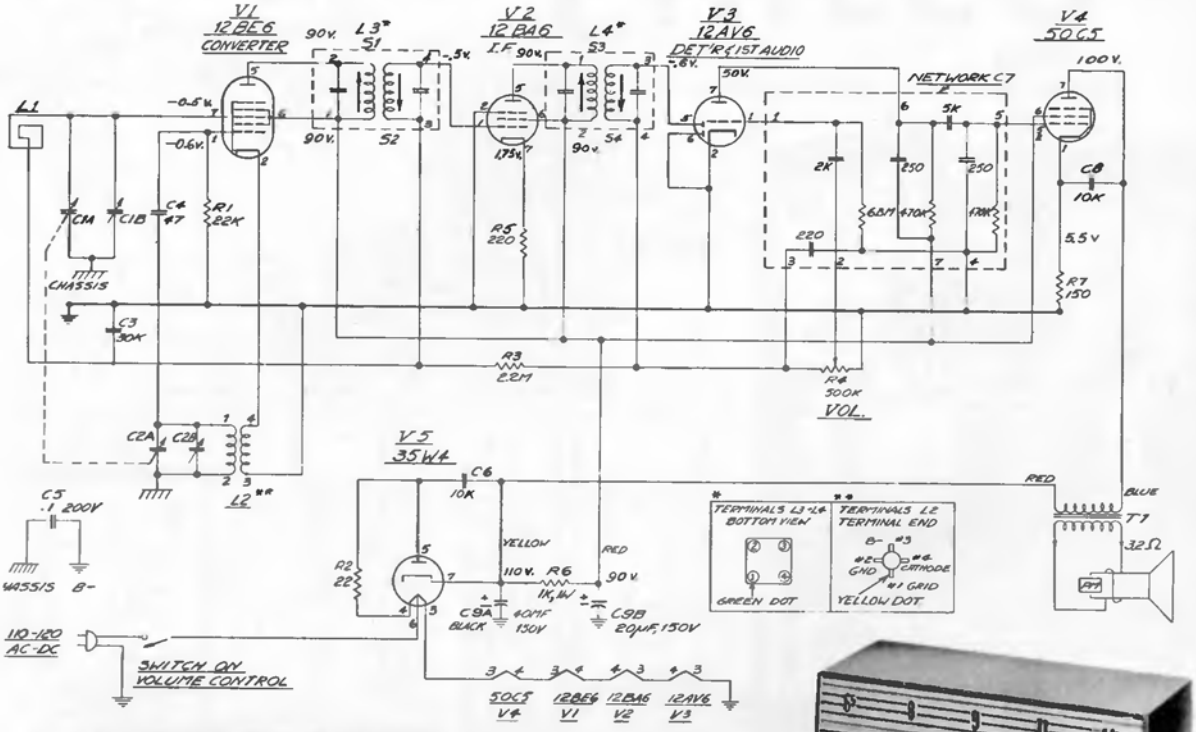


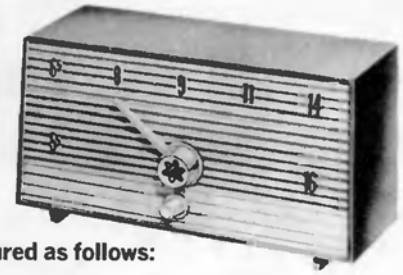

### DC RESISTANCE MEASUREMENTS:

**1st I-F Coil:**
Primary, 19 ohms
Secondary, 19 ohms

**2nd I-F Coil:**
Primary, 19 ohms
Secondary, 19 ohms

**Oscillator Coil:**
Primary, 1 ohm
Secondary, 10 ohms

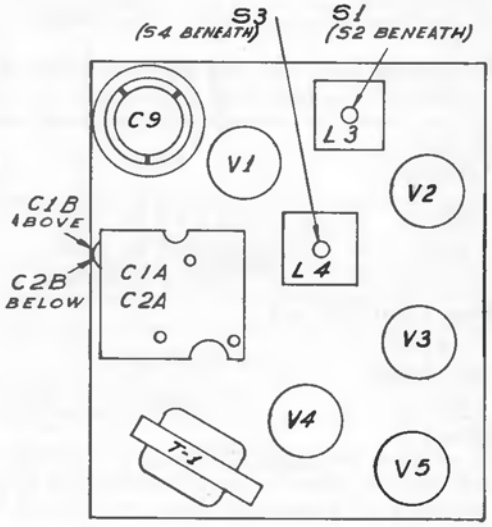


**Socket voltages measured as follows:**

1. Line voltage, 117 volts AC.
2. Volume control at maximum.
3. VTVM between socket terminal and B minus bus.
4. Only DC voltages measured. Allow 10% tolerance.

### ALIGNMENT PROCEDURE:

The alignment of the set is accomplished by following the steps in the chart below. Connect output meter to speaker voice coil. Use isolation transformer, if available, for shock protection.

Each adjustment should be made using a minimum input signal. Connect oscillator through a .01 mfd capacitor in step one; loose-couple oscillator lead in steps two and three.

| Step | Connect Test Oscillator To | Test Oscillator Frequency | Radio Dial Setting | Adjust |
|---|---|---|---|---|
| 1. | Pin 1, V-1 (12BE6) | 455 Kc. | 540 Kc. | S-1, S-2, S-3, & S-4 for MAX. |
| 2. | Loose-couple to antenna | 1620 Kc. | 1620 Kc. | C-2B for MAX. |
| 3. | ditto | 1500 Kc. | Tune to Osc. Signal | C-1B for Max. |

# PACKARD BELL MODEL 6RT2 PERSONAL TRANSISTOR RADIO

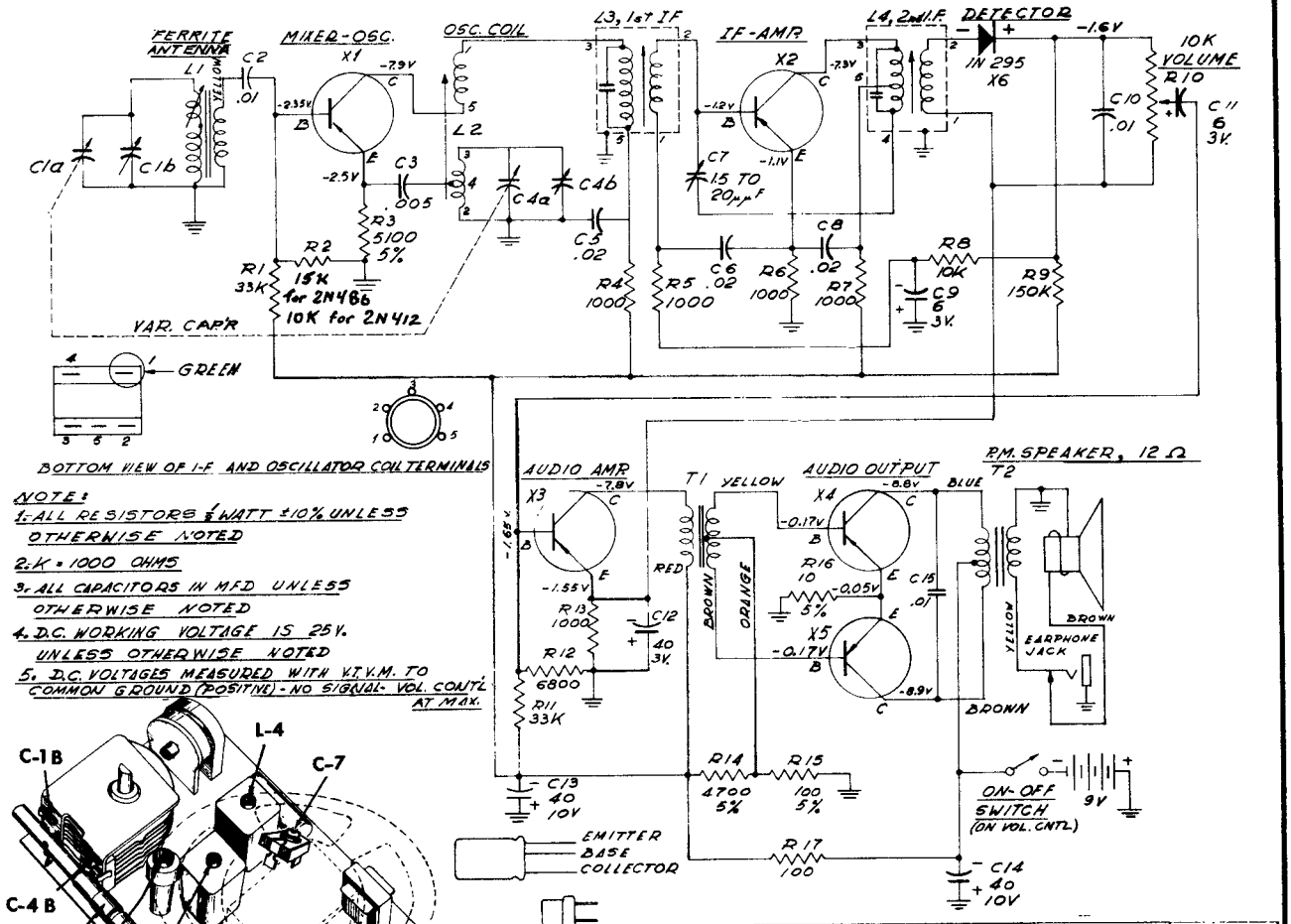


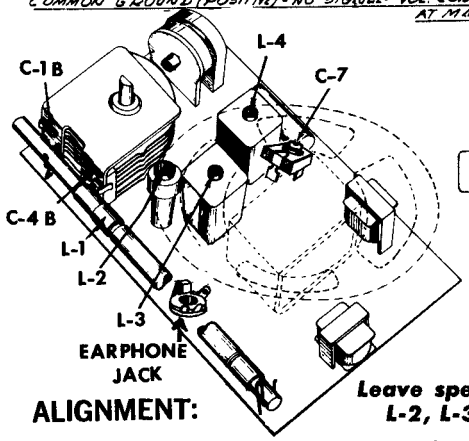


| ITEM | TRANSISTORS | RAYTHEON | | R.C.A. |
|---|---|---|---|---|
| X1 | MIXER-OSC. | 2N486 | | 2N412 |
| X2 | I.F. AMP. | 2N483 | | 2N410 |
| X3 | AUDIO AMP. | 2N363 | | 2N406 |
| X4,5 | AUDIO OUT.* | 2N632 | | 2N408 |
| X6 | DETECTOR DIODE | IN295 | | |

* MATCHED PAIR OR SAME GAIN GROUP NO.

## ALIGNMENT:

**Leave speaker in place; adjust L-2, L-3, & L-4 from rear.**

Step 1. Preset I-F amplifier neutralizer capacitor C-7 by turning completely clockwise (maximum capacity) then back one eighth of a turn (45 degrees). See note after step seven.

| Step | Connect Test Oscillator To | Test Oscillator Frequency | Radio Dial Setting | Adjust |
|---|---|---|---|---|
| 2. | Variable, antenna section | 455 kc | 535 kc | L-3 & L-4 for MAX |
| 3. | Couple to antenna | 600 kc | 600 kc | L-2 (osc) for MAX |
| 4. | Couple to antenna | 1620 kc | 1620 kc | C-4B for MAX |
| 5. | Repeat steps two and three and check calibration at low end of dial (535 kc) | | | |
| 6. | Couple to antenna | 1500 kc | Tune to test osc. signal | C-1B for MAX |
| 7. | Couple to antenna | 600 kc | 600 kc | L-1 (antenna) for MAX |

NOTE: Optimum setting of neutralizing capacitor C-7 depends upon parameters X-2 and L-4. If, after alignment, regeneration occurs on stations near the high end of the dial, capacity of C-7 should be decreased (ccw). Too low a value, however, will result in loss of sensitivity.

If it has been necessary to change the setting of C-7 more than 45 degrees after completing the alignment, then the I-F adjustment (step two) should be repeated.

# PHILCO

## MODEL T-3 — CODES 124, 126, 128 & 130

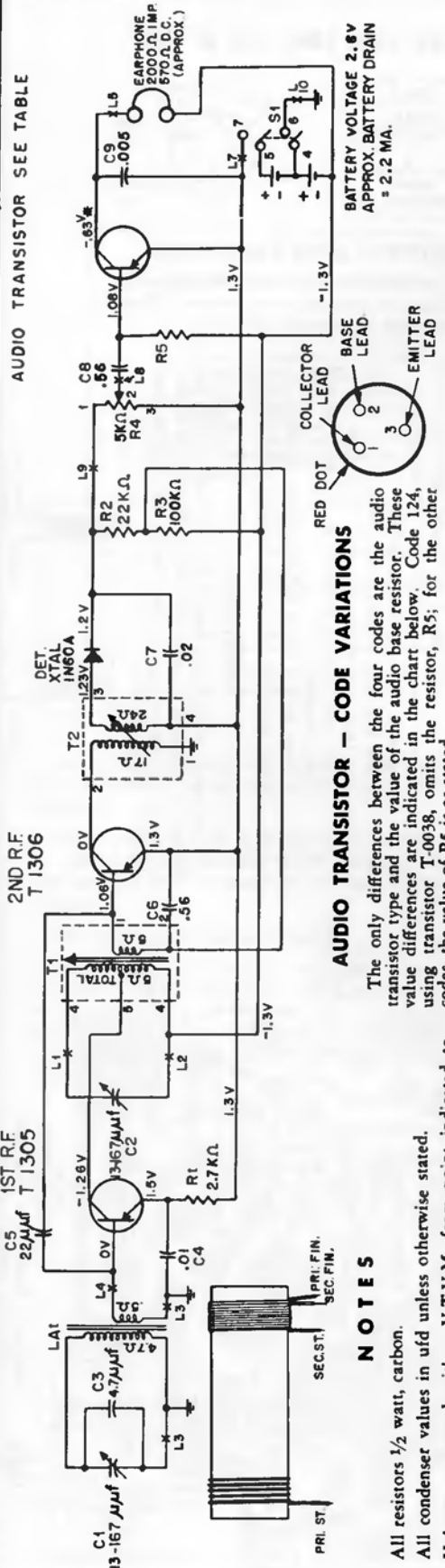


### NOTES

All resistors ½ watt, carbon.

All condenser values in ufd unless otherwise stated.

Voltages measured with a V.T.V.M. from point indicated to ground, under "No Signal" condition, with volume control at minimum and 2.6 volts from the battery supply.

*Audio collector voltage may vary between —.6 and —1.0 volt depending upon the transistor.

Coil resistances measured with coil in the circuit.

### AUDIO TRANSISTOR — CODE VARIATIONS

The only differences between the four codes are the audio transistor type and the value of the audio base resistor. These value differences are indicated in the chart below. Code 124, using transistor T-0038, omits the resistor, R5; for the other codes, the value of R5 is as stated.

For audio transistor replacement purposes, only one type is used, the T-0041 of code 130, part number 34-6001-21. When this transistor is used as replacement in codes 124, 126 or 128, R5 must be changed in value as indicated in the chart.

There will be no difference in performance between the four audio transistors provided the base resistor, R5, is of the correct value.

| CODE | AUDIO TRANSISTOR | BASE RESISTOR R5 |
|---|---|---|
| 124 | T-0038 | NONE |
| 126 | T-0039 | 100K Ω |
| 128 | T-0040 | 330K Ω |
| 130 | T-0041 | 180K Ω |

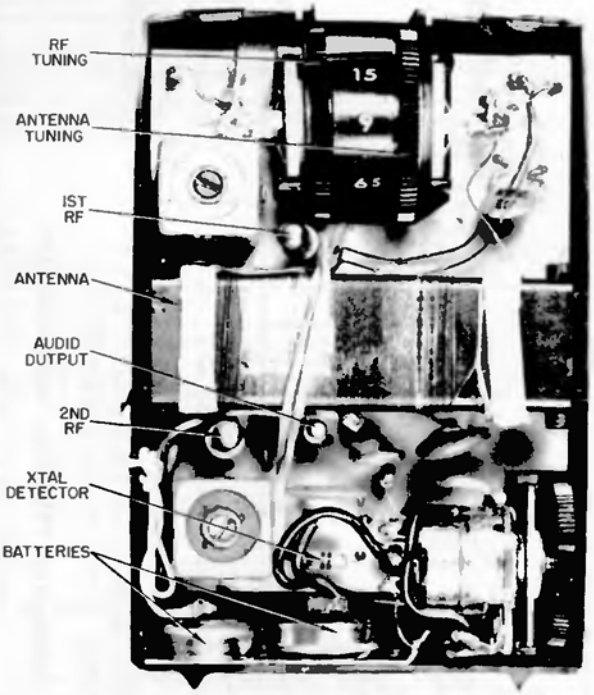


The T-3 Radio with Back Removed

### ALIGNMENT PROCEDURE

GENERAL—Allow the test equipment to warm up for fifteen minutes before starting the alignment procedure.

OUTPUT INDICATOR—Connect the output indicator (a V.T.V.M. using the low voltage AC range or a calibrated oscilloscope) across the ear phone terminals.

SIGNAL GENERATOR—Use an AM r-f signal generator. Radiate the signal to the radio antenna. Use a 6 to 8 turn, 6-inch diameter loop made up of insulated wire. Connect to generator terminals and place about one foot from the radio antenna.

OUTPUT LEVEL—During alignment, attenuate the signal-generator output so as to maintain the output level at 0.63 volts.

RADIO CONTROLS—Set the volume control to maximum. Set the antenna tuning knob (the right-hand knob with the dial scale) to 600 KC. Without moving the antenna tuning, adjust the RF tuning knob to the mid-position of its fine-tuning range. DO NOT DISTURB the radio tuning once it is set.

Step #1—Set generator to 600 KC. Adjust the core of T1 (the 1st RF transformer) for peak. Rock the generator — NOT the radio tuning — and adjust for maximum.

Step #2—Set generator to 600 KC. Adjust the core of T2 (the 2nd RF transformer) for maximum. This transformer is very broad; there will be only a slight peak. The core may not extend above the top of the can.

# PHILCO RADIO MODEL T-3 — CODES 132, 134, 136 & 138

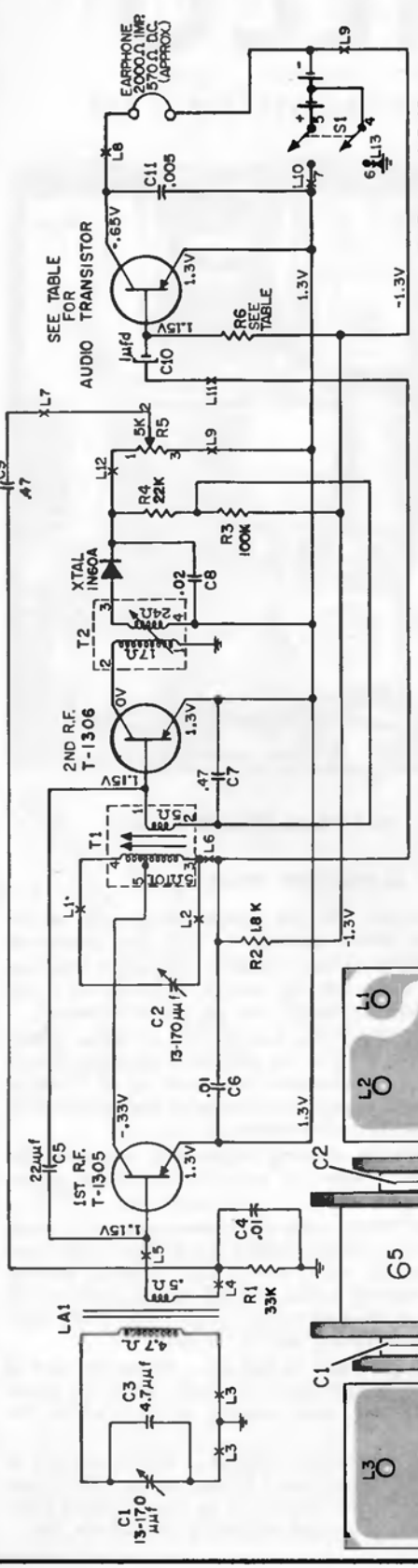


| CODE | AUDIO TRANSISTOR | BASE RESISTOR RB |
|---|---|---|
| 138 | T-0041 | 120K Ω |
| 136 | T-0040 | 220 K |
| 134 | T-0039 | 470 K |
| 132 | T-0038 | 1M |

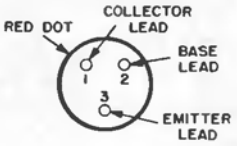


## AUDIO TRANSISTOR — CODE VARIATIONS

The only differences between the four codes are the audio transistor type and the value of the audio base resistor. These value differences are indicated in the chart above.

## PANEL-WIRE TERMINAL IDENTIFICATION

| | |
|---|---|
| L1 | Orange lead from r-f tuning, C2, to T1 lug 4. |
| L2 | Black lead from r-f tuning, C2, to T1 lug 3 and red jumper to terminal 6. |
| L3 | Orange lead from ant. tuning, C1, and plain lead from bottom of ant. pri. (LA1) to panel ground. |
| L4 | Red lead from bottom of ant. sec. (LA1) to junction of R1, C4 and C5. |
| L5 | Red lead from top of ant. sec. (LA1) to 1st r-f base. |
| L6 | Red jumper from terminal 2, black jumper to terminal 11 and junction of C6 and R2. |
| L7 | Yellow lead to arm of volume control (R5). |
| L8 | Earphone lead to audio collector. |
| L9 | Black lead from battery, —1.3 volts. |
| L10 | Red lead from switch S1 lug 7, +1.3 volts. |
| L11 | Black jumper from terminal 6 to C10, the 1ufd audio coupling. |
| L12 | Orange lead to top of volume control, R5 lug 1. |
| L13 | Black lead from switch, S1, lug 6 to panel ground. |

## SHIELDING

To suppress possible regeneration, the leads of T1 are shielded by wrapping a small piece of aluminum tape around the can so as to cover the cut-outs. When replacing be careful not to cause shorts.


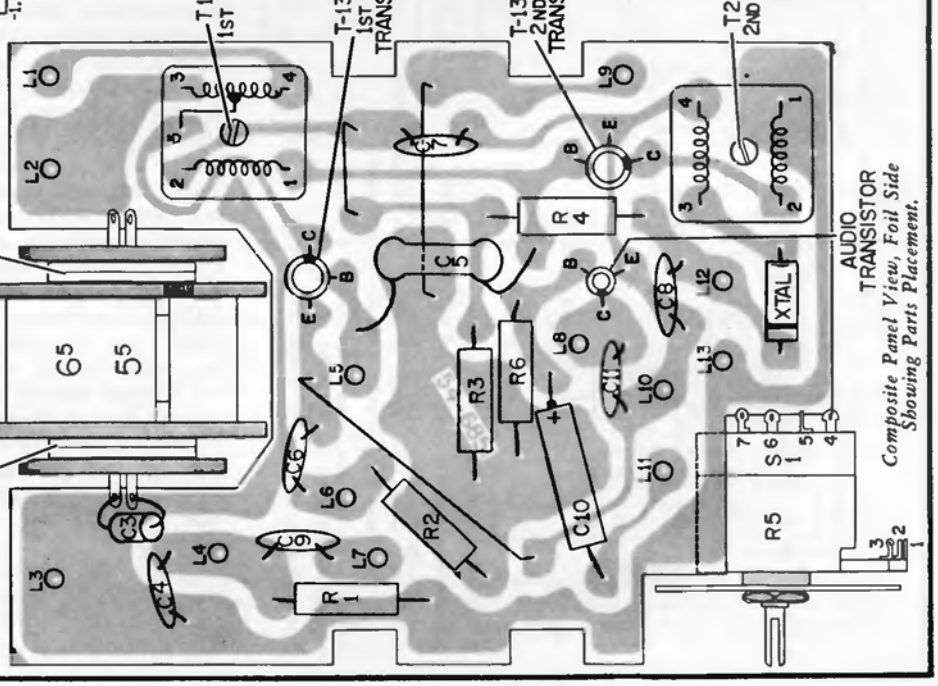


*Composite Panel View, Foil Side Showing Parts Placement.*

# PHILCO

## MODELS T-4 and T-4J — CODE 124

### ALIGNMENT CHART

| STEP | SIGNAL GENERATOR | | RADIO | | ADJUST |
|---|---|---|---|---|---|
| | CONNECTION TO RADIO | DIAL SETTING | DIAL SETTING | SPECIAL INSTRUCTIONS | |
| 1 | Panel must be removed from cabinet. Connect signal generator through a .1 uf condenser to antenna section of gang. Use the least generator signal necessary to give an oputput indication. | 455 KC | Tuning gang fully open. | Adjust for maximum output in order given. | Z3—3rd IF<br>Z2—2nd IF<br>Z1—1st IF |
| 2 | Use radiating loop (See note 1 below). | 1620 KC | 1620 KC (gang fully open) | Pre-set C2A (Ant.) 1/2 turn from tight. Adjust for maximum output. | C1B—osc. trimmer |
| 3 | Same as step 2. | 1400 KC | 1400 KC | Adjust for maximum output. | C1A—ant. trimmer |
| 4 | Same as step 2. Panel MUST be re-mounted in cabinet. | 600 KC | 600 KC | Adjust for maximum output. Rock tuning gang while makin this adjustment. | T1—osc. core |
| 5 | Repate steps 2, 3 and 4 until no further improvement is obtained. Always stop on step 2. | | | | |

NOTE 1. Use a 6-to-8 turn, 6-inch diameter loop made up of insulated wire. Connect to generator terminals, and place about one foot from radio loop.

### SCHEMATIC NOTES

Due to 2nd IF transistor variations the values of resistors R6 and R7 must be selected, within limits, for optimum performance.

When transistor R186 is defective, kit number 324-8003 must be ordered. This kit contains a R186 transistor and two resistors (R6 and R7) properly matched. All three components must be replaced.

The stage may be checked as follows:

The value of R6 is selected to allow the 2nd IF transistor collector to draw 2 milliamps. This is checked by measuring the voltage across R11, the 560 ohm collector return resistor. This voltage should be 1.12 volts, with a tolerance of approximately ±.12 volts. The value of R6 falls within the limits of 27K to 390K.

All resistors are 1/2 watt, 10%, carbon.

Coil resistances read with coil in circuit.

Voice coil impedance = 14 ohms.

Voltages measured to ground with a 20,000 ohms/volt meter under no signal condition.

Emitter to base voltages were measured with positive lead to emitter, except for the 1st IF which is an NPN type and measured with the positive lead to the base.

Run #51 — to improve low end sensitivity. The value of R1 was changed to 15,000 ohms, part number 66-3158340. Some few sets may have a 10,000 ohm resistor for R1.

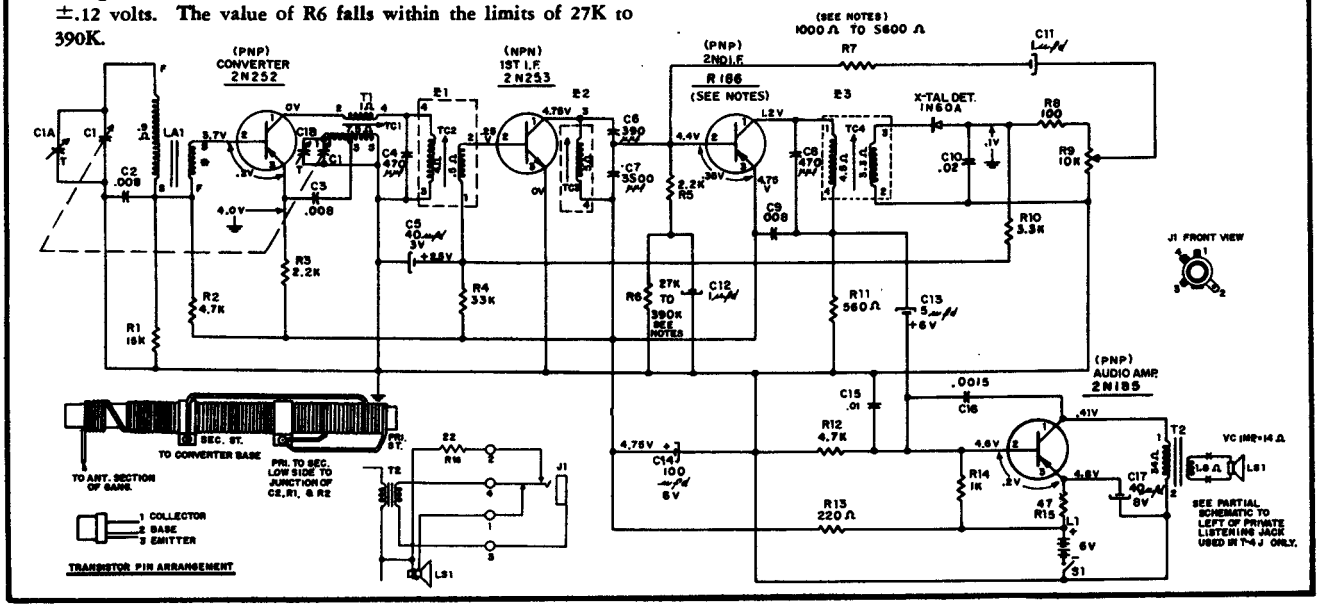

# PHILCO

## PHILCO TRANSISTOR RADIO MODEL T-5 — CODE 124

*Schematic Diagram of Model T-5 — Code 124*

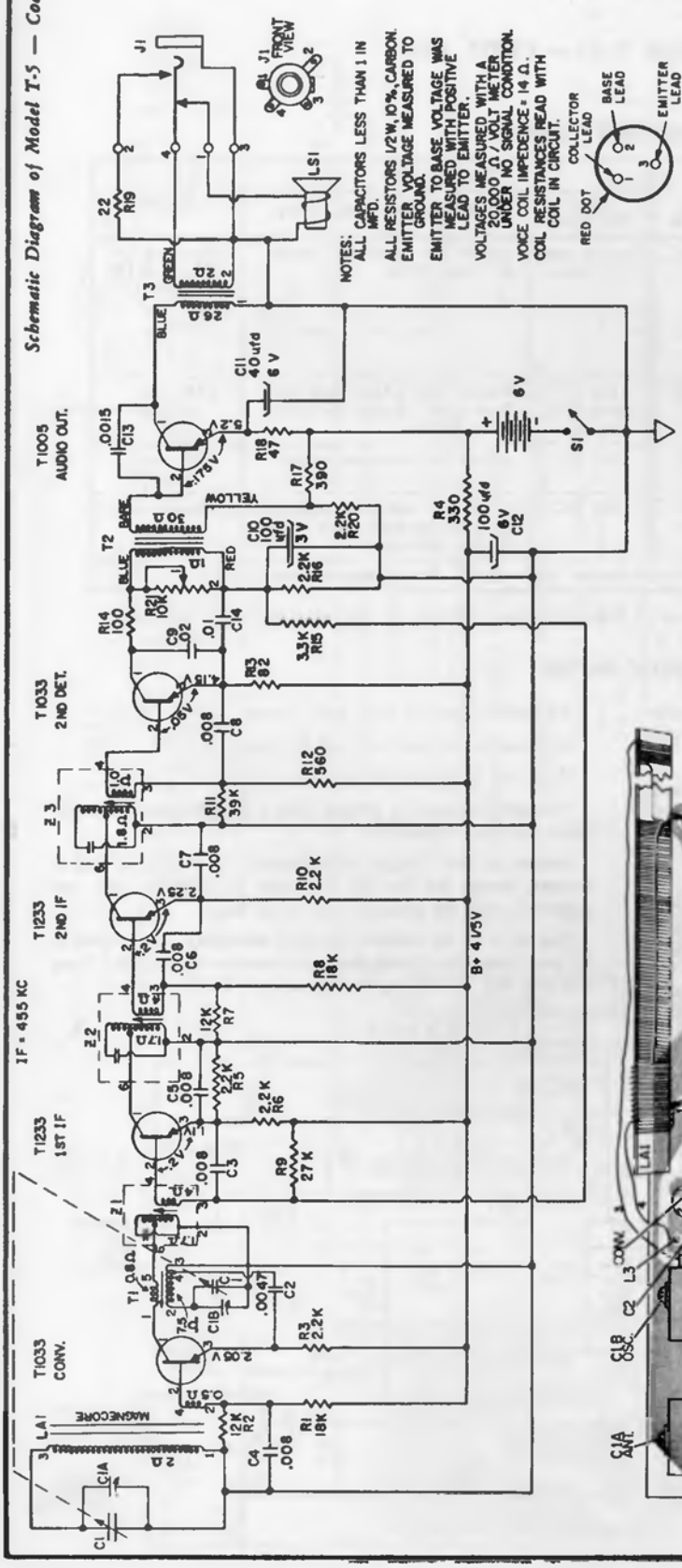


BATTERY VOLTAGE AND TYPE—6.0 volts from 4 penlight cells, type "AA", P-15, or mercury type "AA", P-9.

FREQUENCY COVERAGE—535 to 1620 KC.

INTERMEDIATE FREQUENCY—455 KC.

### TERMINAL LUG IDENTIFICATION

- L1 Orange jumper to L4, 5 volt B+.
- L2 Yellow lead to T2.
- L3 To short antenna lead no. 4.
- L4 Orange jumper to L1, 4.5 volt B+.
- L5 Black jumper to ground lug L10.
- L6 Black lead to positive battery terminal (6 volts).
- L7 Green lead to arm of R21.
- L8 Orange lead to end (No. 2) of R21.
- L9 Blue lead of T3.
- L10 Ground lug: black lead to speaker, black lead to L5 and black lead to on-off switch.

### PRIVATE LISTENING JACK TERMINAL LEADS

Terminal 1—Brown lead to speaker.
Terminal 2—One end of R19, P.L. shunt resistor.
Terminal 3—Black ground lead to on-off switch and other end of R19.
Terminal 4—Green lead of T3.

NOTE: C14 wires under the panel, from L8 to the junction of C9 and the emitter (No. 3) of the 2nd detector.

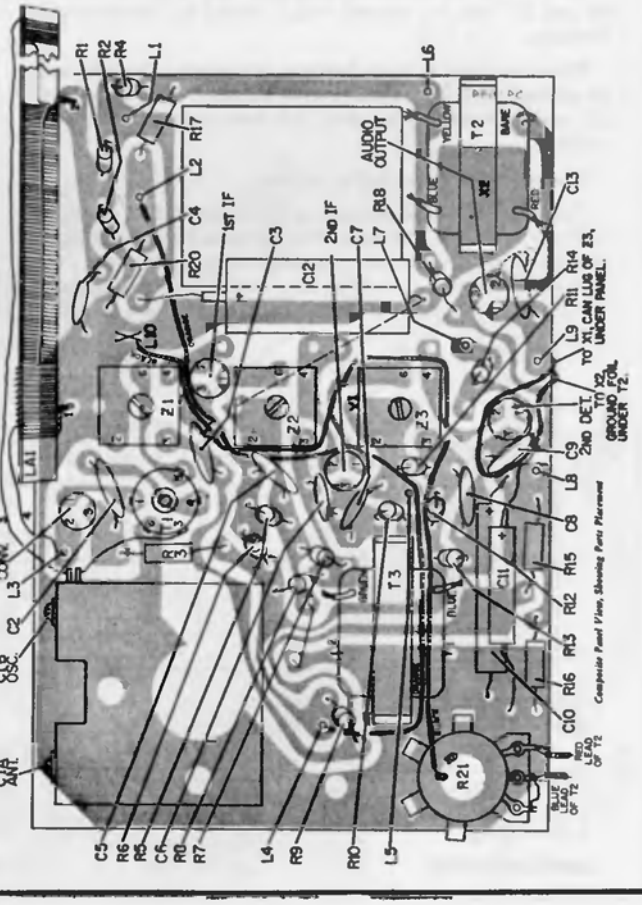

# PHILCO

## TRANSISTOR MODEL T-7X, CODE 128

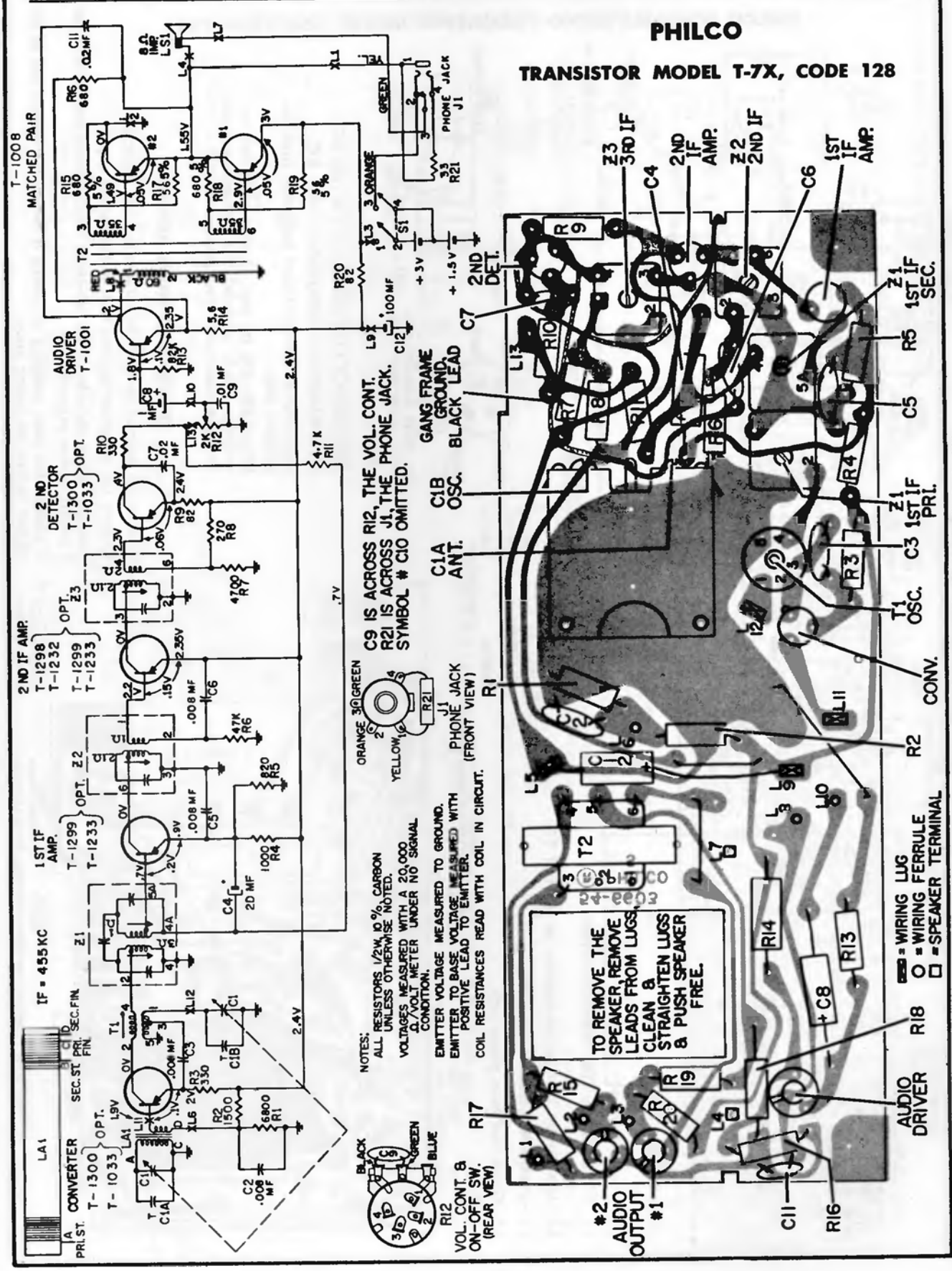


Schematic Diagram of Philco Transistor Portable Model T-7X, Code 128

## PHILCO PORTABLE RADIO TRANSISTOR MODEL T-60, CODE 124

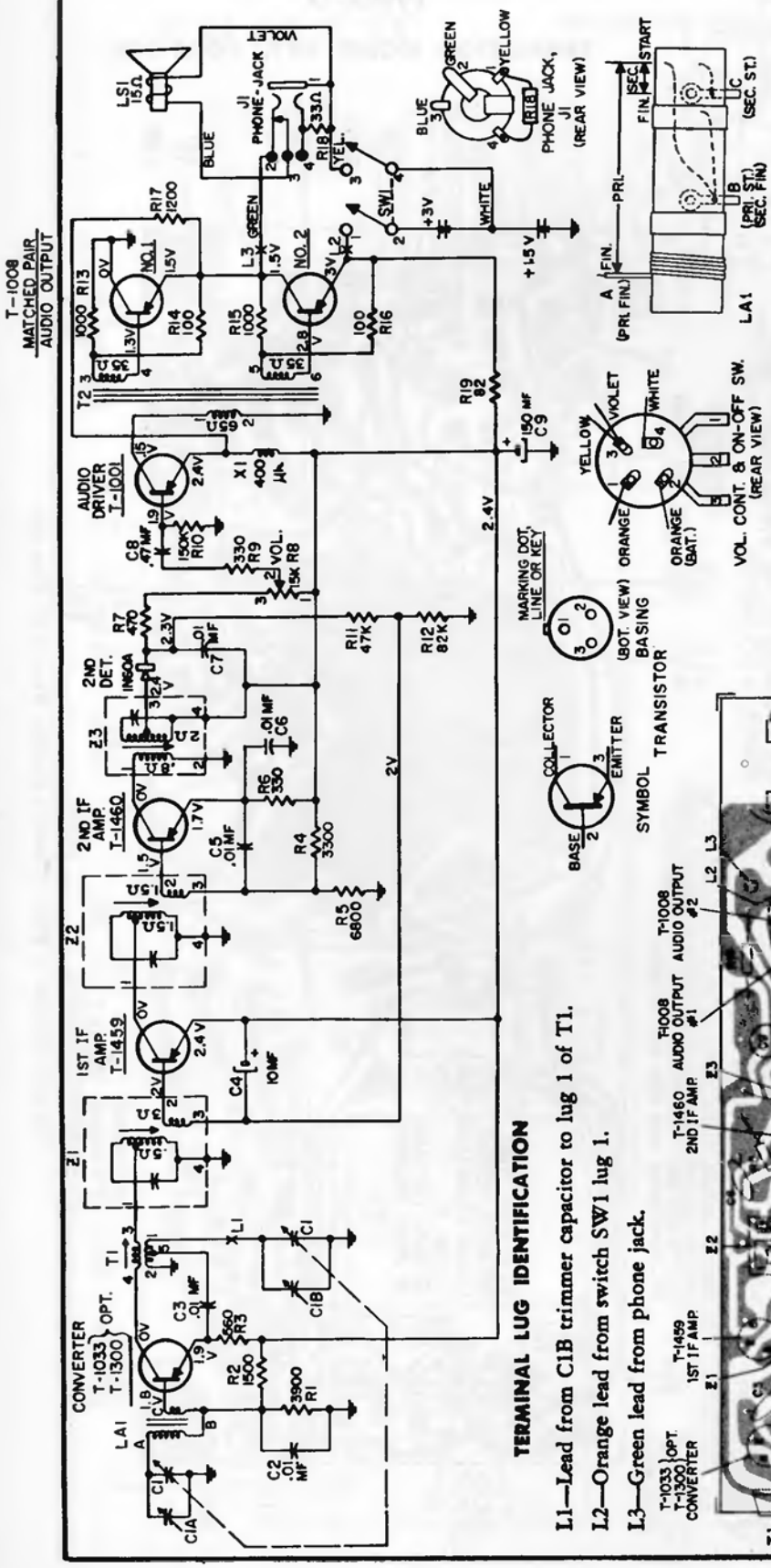


### TERMINAL LUG IDENTIFICATION

L1—Lead from C1B trimmer capacitor to lug 1 of T1.

L2—Orange lead from switch SW1 lug 1.

L3—Green lead from phone jack.

FREQUENCY COVERAGE—535 to 1620 KC.

INTERMEDIATE FREQUENCY—455 KC.

ANTENNA—Self-contained magnecor, high-impedance loop.

SPEAKER—2¾ in. pm., 15 ohm voice coil impedance. Jack provided for optional private listening attachment, part number 42-1975-4.

### PRINTED-WIRE PANEL REMOVAL

1. Remove the snap-on back of the cabinet and the batteries.
2. Remove the tri-mount fastener next to the battery clips.
3. Carefully spread the sides of the cabinet to free the panel from each of the 4 slotted cabinet supports.
4. Withdraw the panel assembly by sliding it toward the speaker end of the cabinet to free the tuning knob.

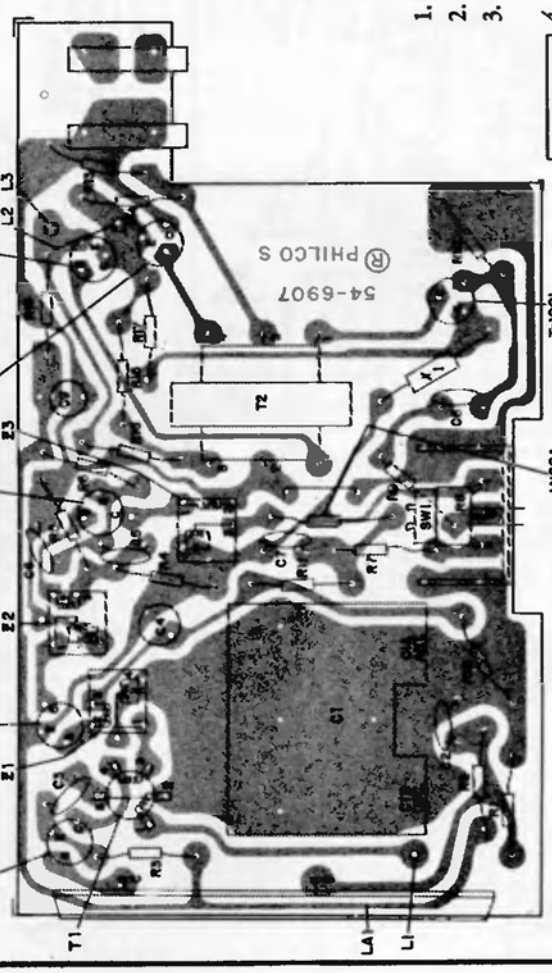


*Component Panel Bottom View—Showing Parts Location*

## PHILCO TRANSISTOR RADIO — MODEL T-65

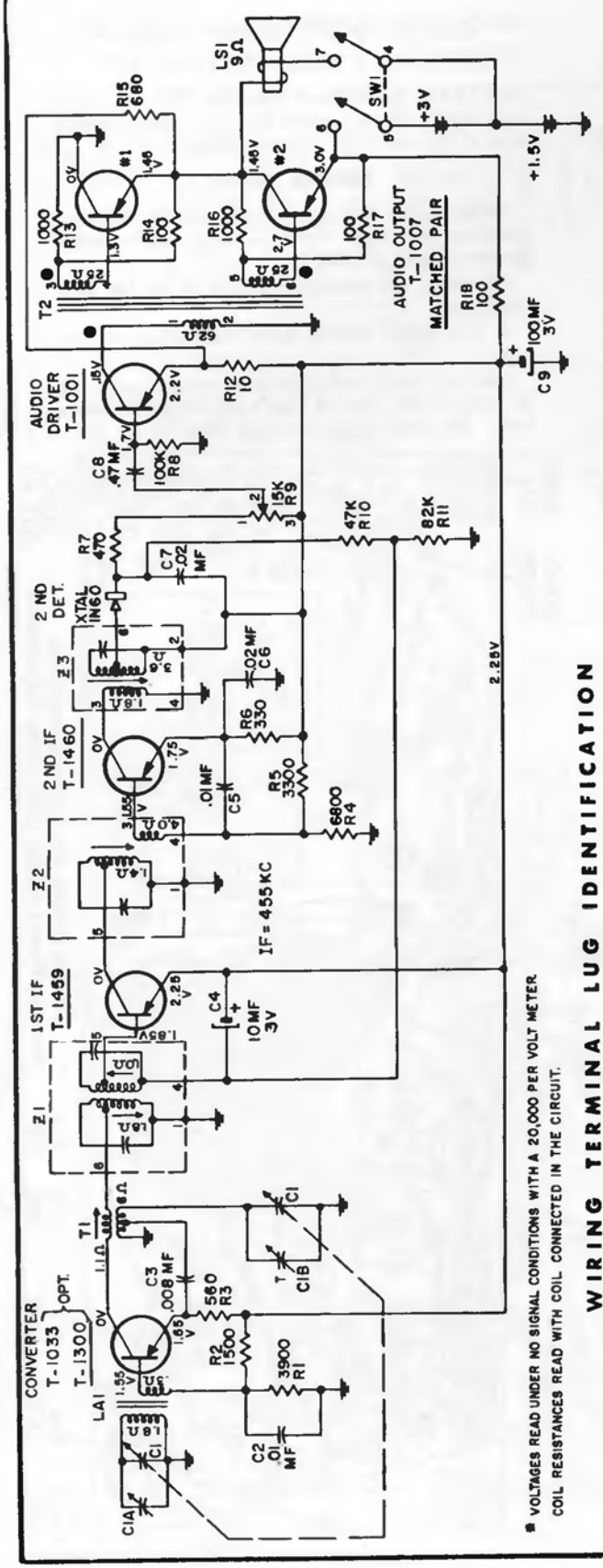


* VOLTAGES READ UNDER NO SIGNAL CONDITIONS WITH A 20,000 PER VOLT METER. COIL RESISTANCES READ WITH COIL CONNECTED IN THE CIRCUIT.

### WIRING TERMINAL LUG IDENTIFICATION

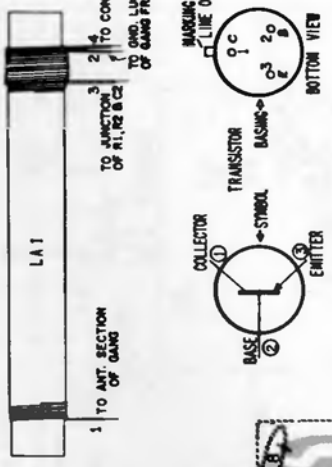


L1 Black lead, battery ground.
L2 Orange lead, 1.5V battery.
L3 Red lead, 3.0V battery.
L4 Green lead, audio output to speaker.
L5 Red antenna lead, low side of secondary, lead #3.
L6 Red antenna lead, high side of secondary, lead #4.
Antenna lead, high side of primary to ant. section of gang, lead #1.
Antenna lead, low side of primary to gang ground lug, lead #2.
Orange lead from speaker to terminal #7 of S1.

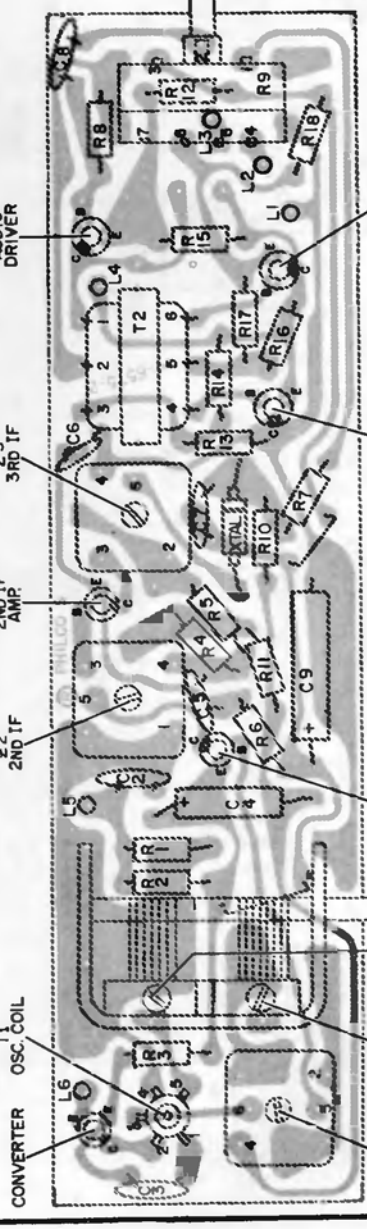


Printed Wire Panel, Bottom View

AUDIO OUTPUT—0.1 watt.

BATTERY VOLTAGE AND TYPE—3.0 volts from 2 standard "D" cells.

FREQUENCY COVERAGE—535 - 1620 KC.

INTERMEDIATE FREQUENCY—455 KC.

# PHILCO PORTABLE RADIO MODEL T-75, CODE 124

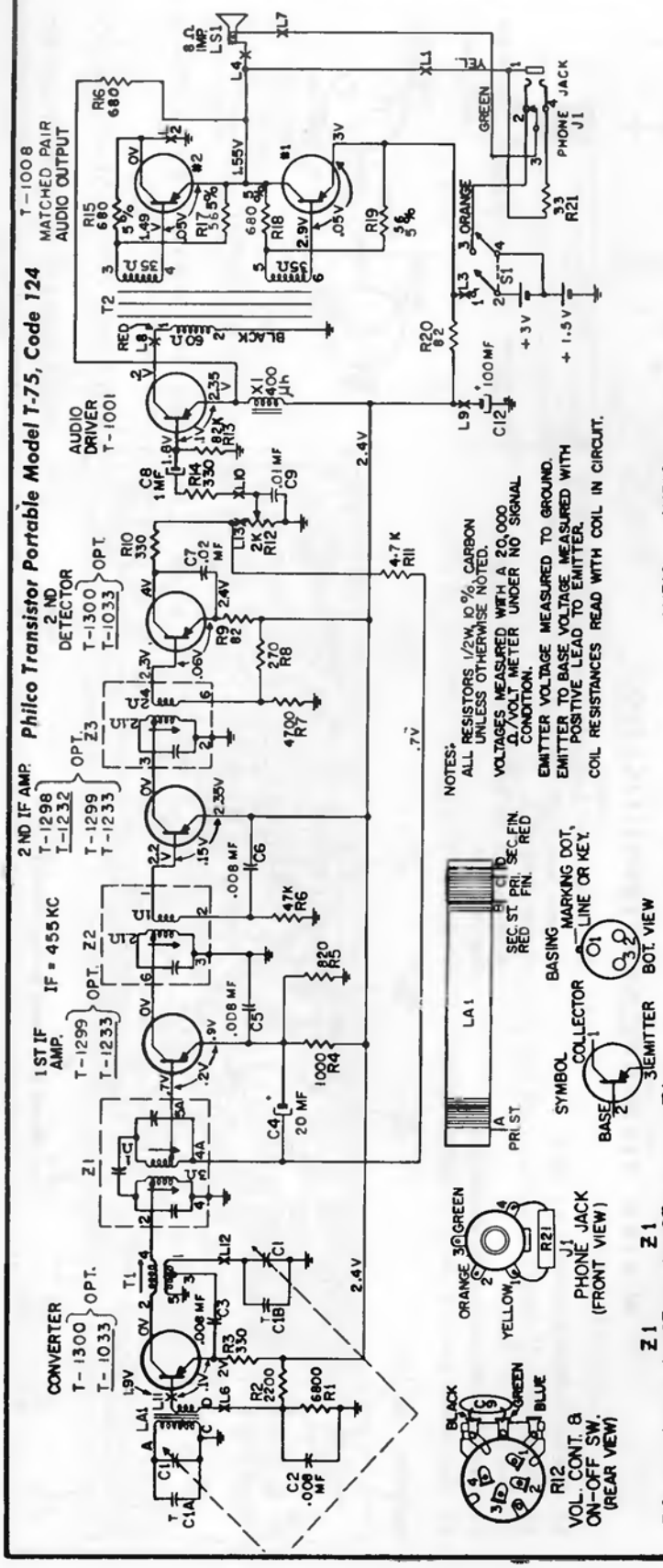


FREQUENCY COVERAGE—535 to 1620 KC.

INTERMEDIATE FREQUENCY—455 KC.

BATTERY SUPPLY—2 standard "D" cells, in 3 volt supply center tapped at 1-1/2 volts. Battery type P-907 or P-920 (metal clad).

## SERVICE NOTES

When signal tracing, inject signal at transistor collector and limit input to keep signal across speaker below .6 volts.

Normally, the transistors should be the last item suspected.

If C12 opens serious audio oscillation will result.

Dress of black lead from top, center, frame lug of gang to end ground lug is important to reduce beat. See base layout for lead dress.

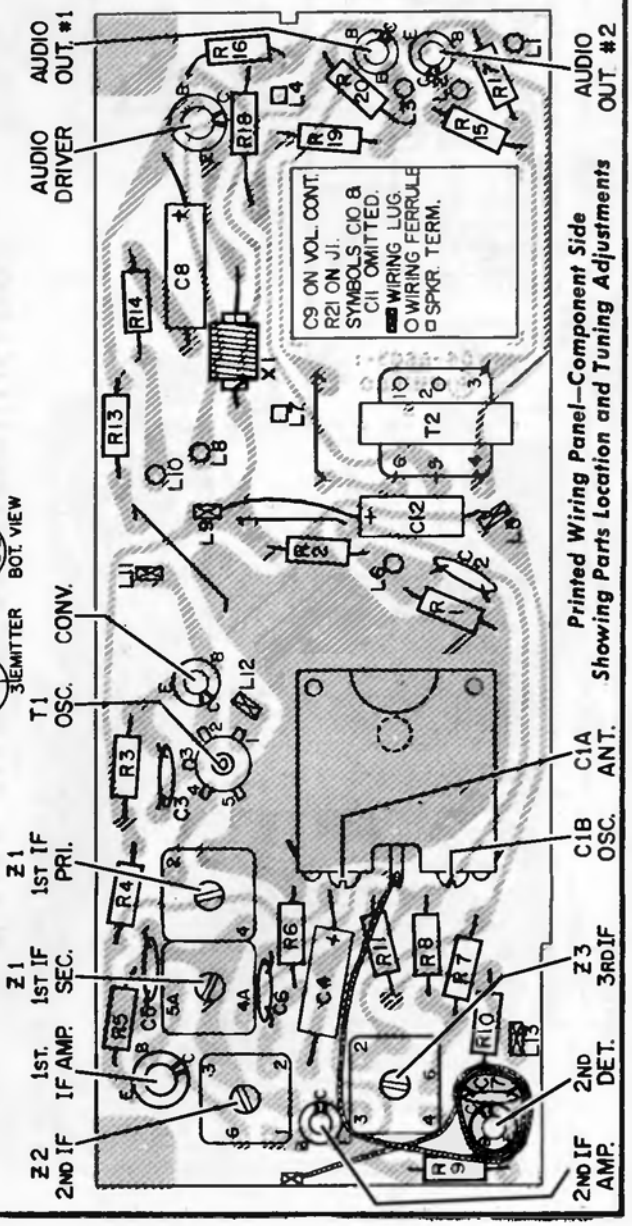


*Printed Wiring Panel—Component Side Showing Parts Location and Tuning Adjustments*

# PHILCO RADIO

## AM/FM TUNER—TYPE RT-202

Electrically all chassis are identical except the RT-202-2 and the RT-202-4. The RT-202-4 chassis contains a 560 ohm resistor and .01 mfd capacitor from the cathode of the AM-RF amplifier (V7) to ground. Lug L1 on the printed wire panel of the RT-202-4 chassis is grounded, thus returning the secondary of T10 and condenser C43 to ground instead of the AVC circuit. The RT-202-2 chassis uses an AM antenna coil while the remaining chassis use a magnecore antenna.

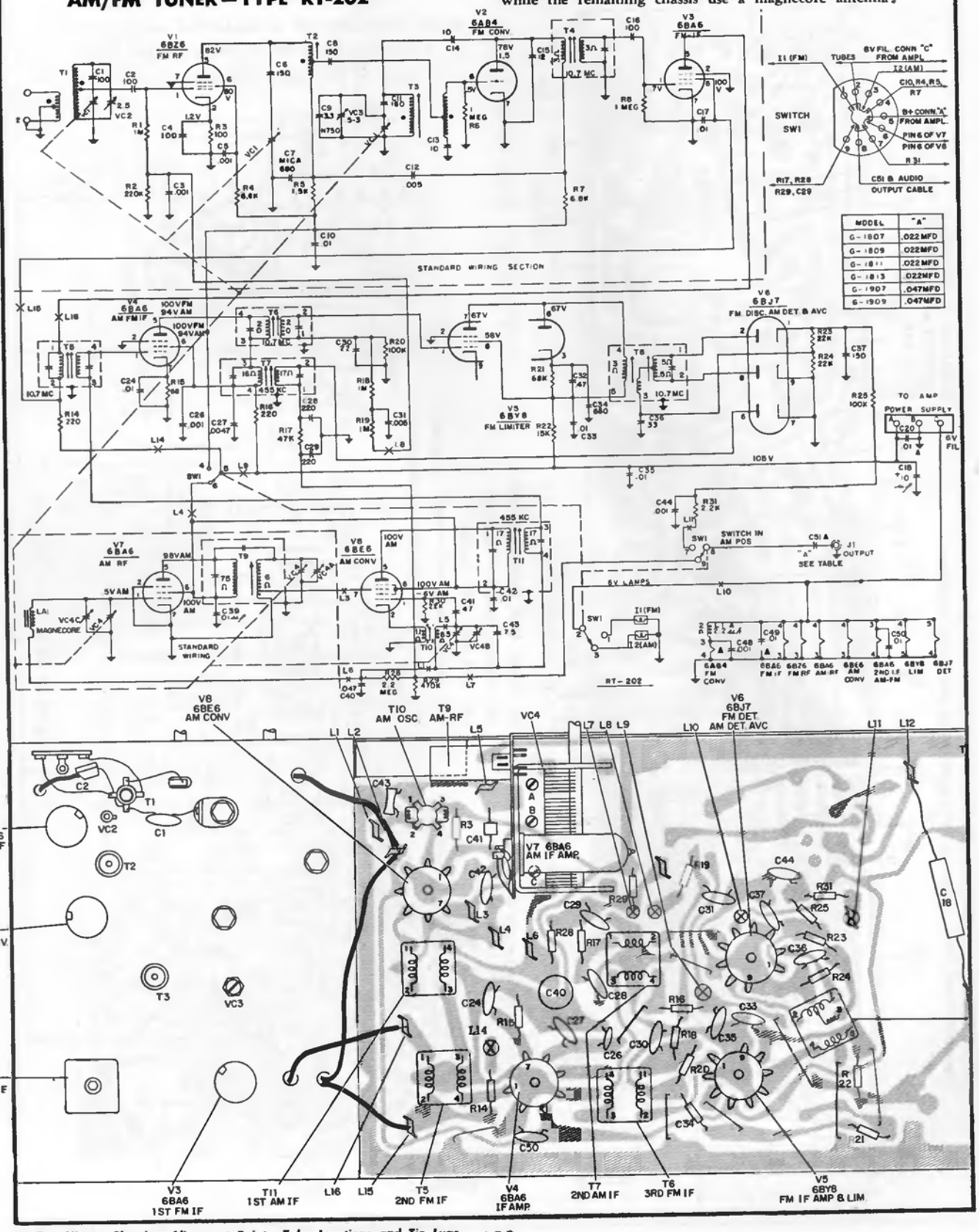


| MODEL | "A" |
|---|---|
| G-1807 | .022 MFD |
| G-1809 | .022 MFD |
| G-1811 | .022 MFD |
| G-1813 | .022 MFD |
| G-1907 | .047 MFD |
| G-1909 | .047 MFD |

*Top View — Showing Alignment Points, Tube Locations and Tie Lugs*

## PHILCO TRANSISTOR RADIO — MODEL T-6 — CODE 124

### MODEL T-600 — CODE 124

Model T-600 identical to Model T-6 except C10 has been deleted and R5 has been changed from 1000 ohms to 330 ohms, part no. 66-1338340.

INTERMEDIATE FREQUENCY—455 KC.

L1 Black lead, battery ground.
L2 Orange lead, 1.5V battery.
L3 Red lead, 3.0V battery.
L4 Orange lead, audio output to speaker.
L5 Antenna lead, low side of secondary, lead #3.

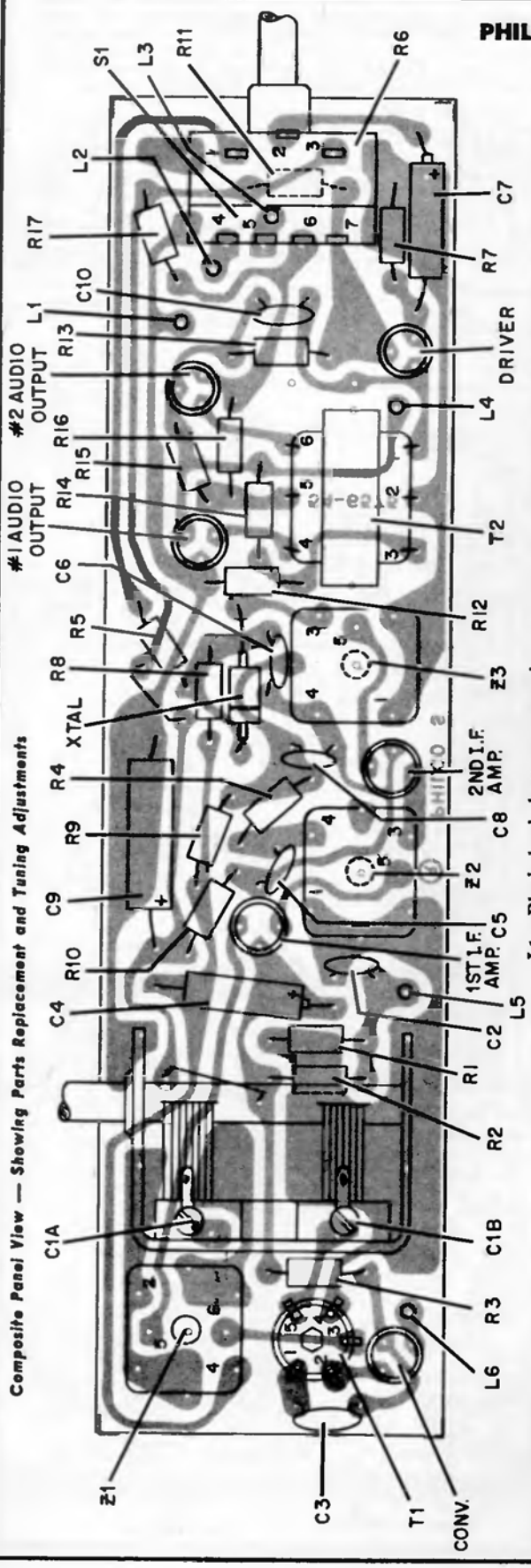


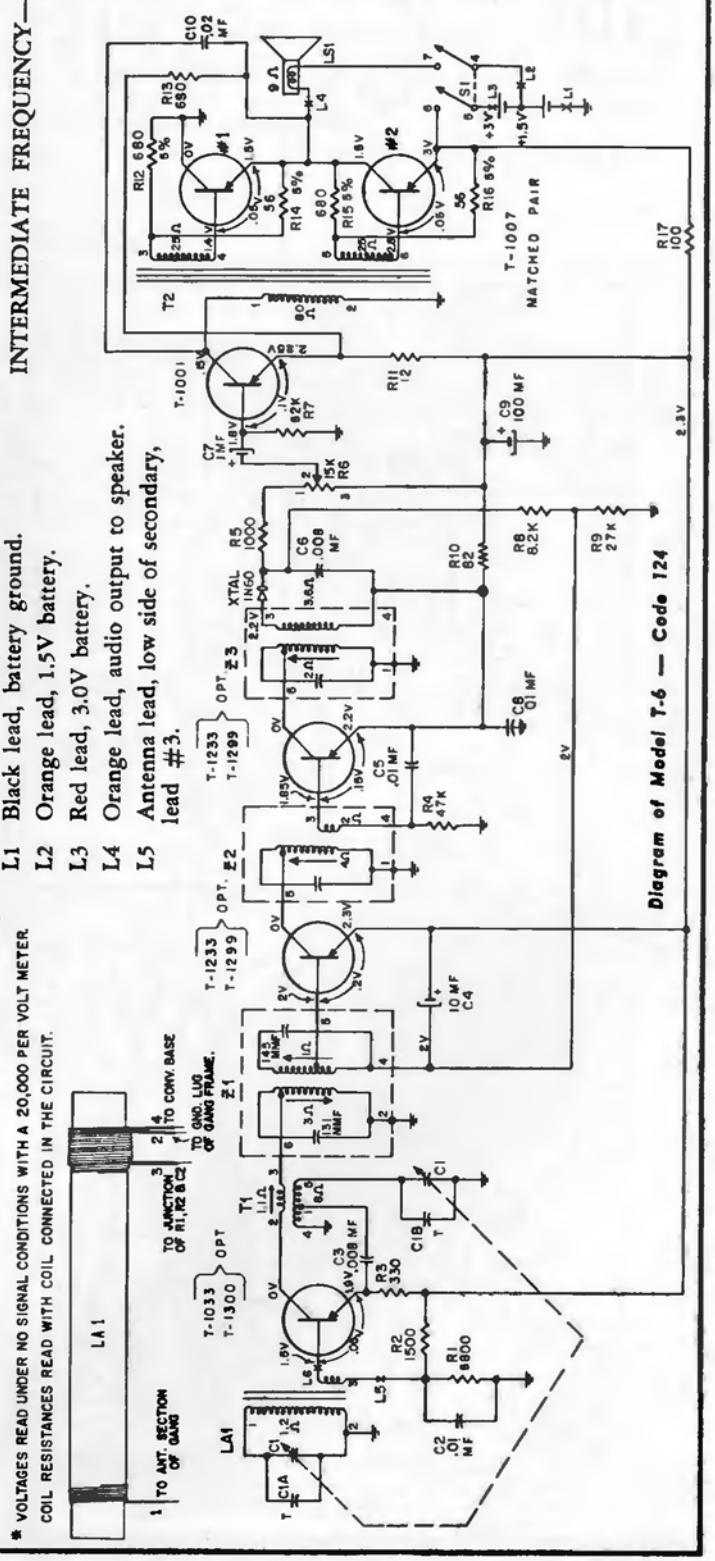


* VOLTAGES READ UNDER NO SIGNAL CONDITIONS WITH A 20,000 PER VOLT METER. COIL RESISTANCES READ WITH COIL CONNECTED IN THE CIRCUIT.

# PHILCO PORTABLE RADIO MODEL G-681, CODE 124

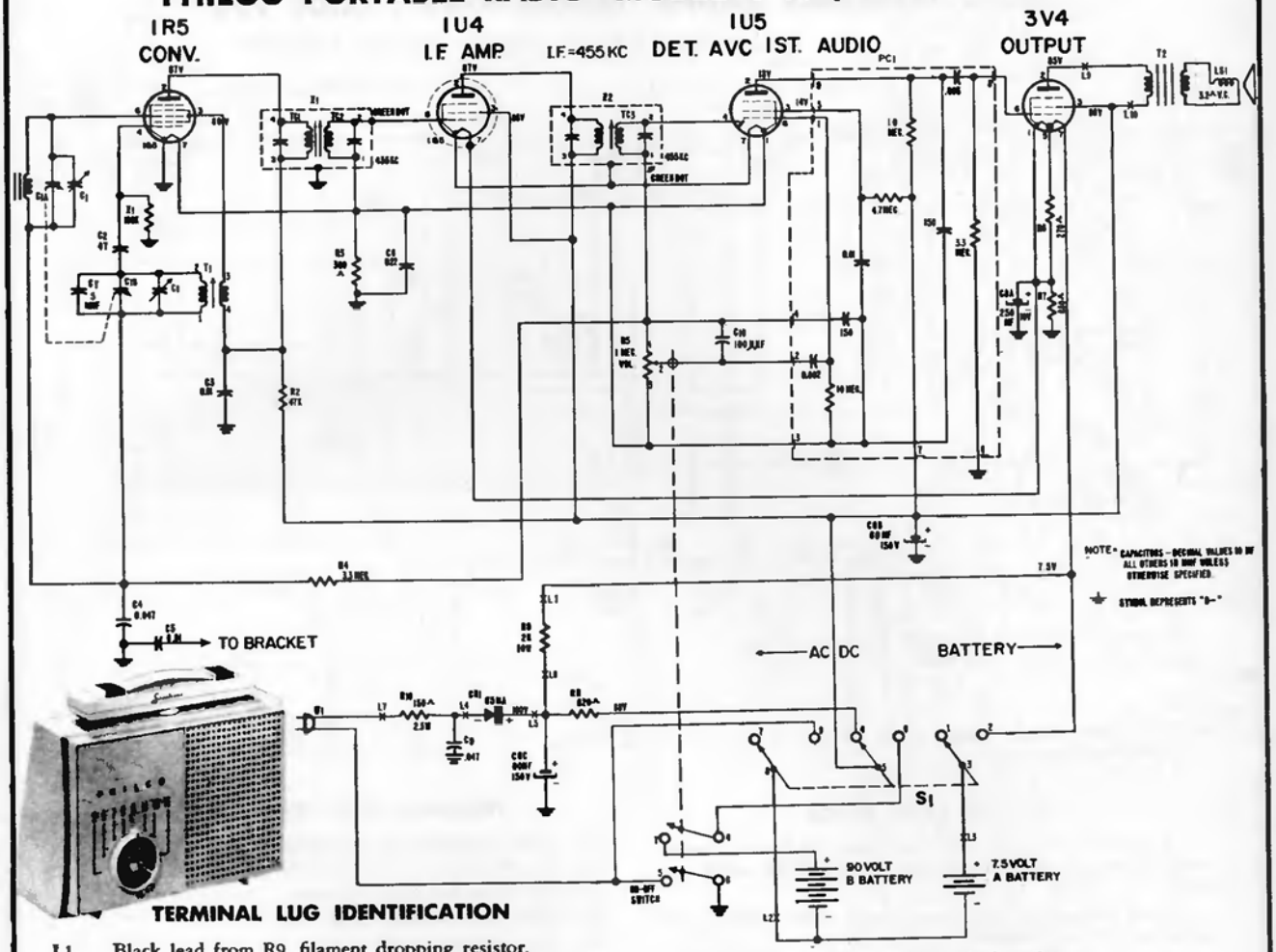


## TERMINAL LUG IDENTIFICATION

- L1 Black lead from R9, filament dropping resistor.
- L2 B—, black lead from "A" battery and yellow lead from "B" battery.
- L3 A+, brown lead from "A" battery.
- L4 Black lead to selenium rectifier, CR1.
- L5 B+, red lead from CR1.
- L6 Brown lead to filament dropping resistor, R9.
- L7 White lead from AC interlock to R10.
- L8 Blue lead to L11, ground.
- L9 Blue lead from 3V4 plate to output trans., T2.
- L10 Red lead to output transformer, T2.
- L11 Blue lead to L8, ground.
  White lead from AC interlock to lug 5 of ON-OFF switch.
  Red lead from "B" battery to lug 7 of ON-OFF switch.

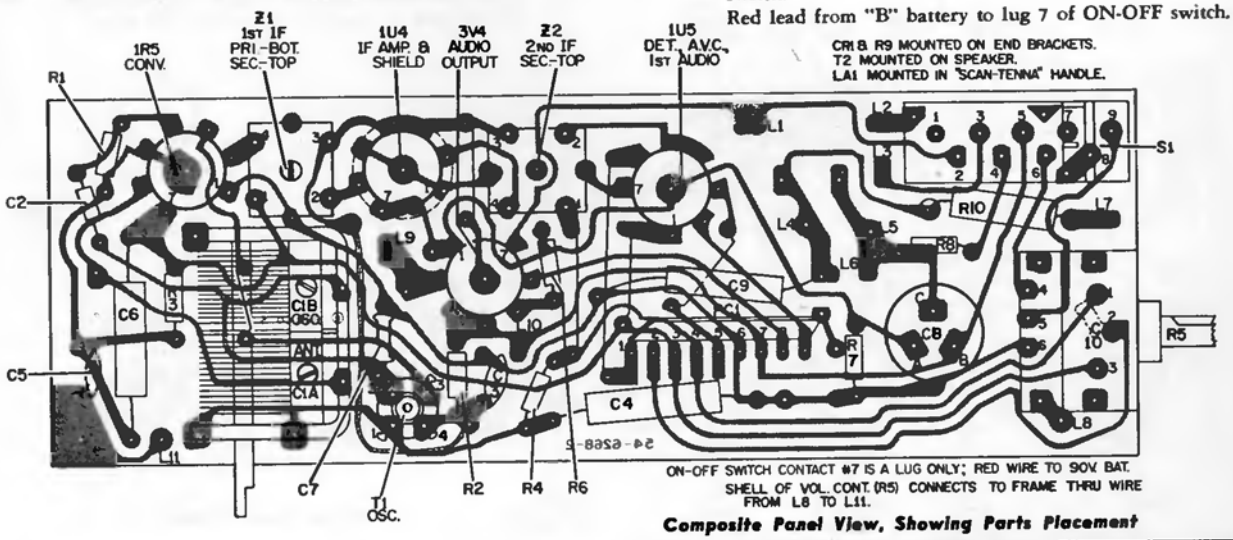


***Composite Panel View, Showing Parts Placement***

# PHILCO PORTABLE RADIO MODEL H-691, CODE 124

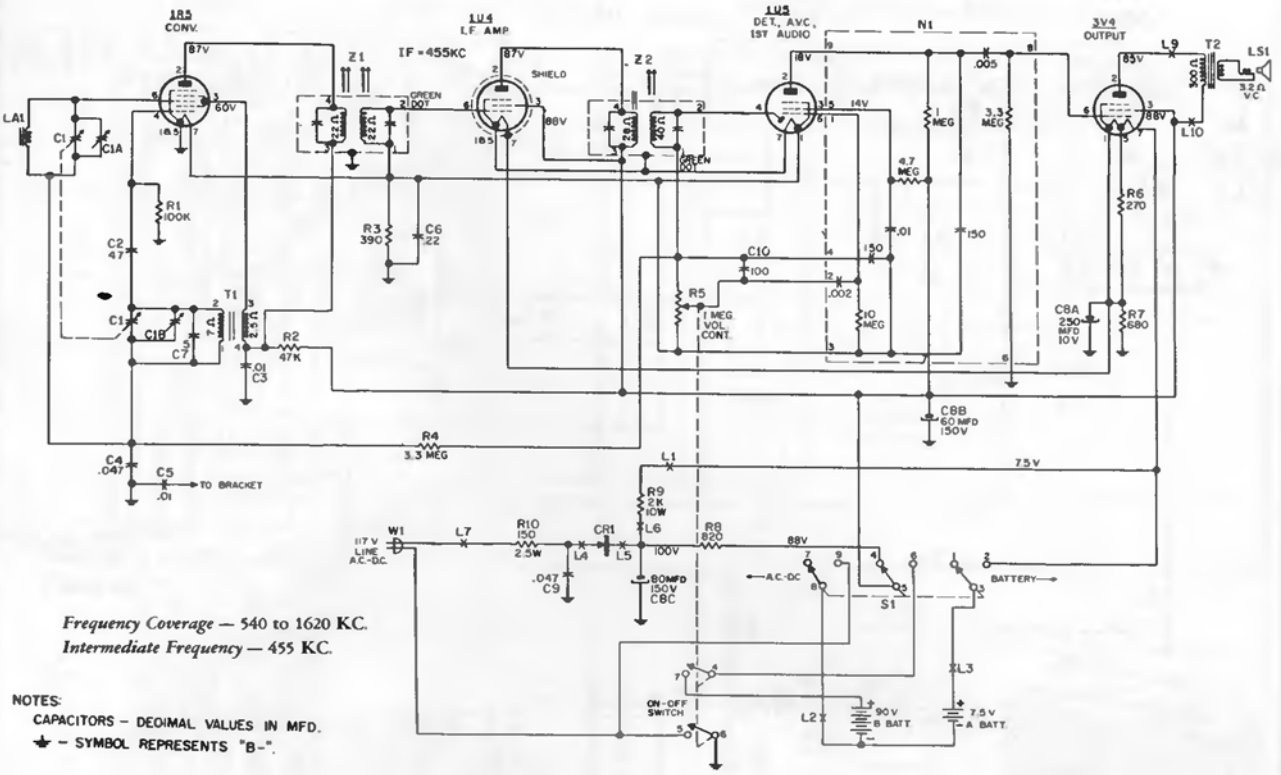


*Frequency Coverage* — 540 to 1620 KC.
*Intermediate Frequency* — 455 KC.

NOTES:
CAPACITORS – DECIMAL VALUES IN MFD.
⏚ – SYMBOL REPRESENTS "B–".

## CRITICAL LEAD DRESS

1. Brown and black wires, from wiring panel on bracket, must be dressed below and away from R9 and in front of the tuning condenser, C1.

2. Brown and black "A" battery leads must be dressed over the output transformer, T2, and through the dress lug.

3. Red and yellow "B" battery leads must be dressed up through the AC interlock mounting bosses.

4. White AC interlock leads must be dressed toward the front panel.

5. All wires must be dressed clear of the current limiting resistor, R10.

6. C6, the filament condenser, must be dressed toward the bracket, away from C1, the tuning gang.

## TERMINAL LUG IDENTIFICATION

L1 Black lead from R9, filament dropping resistor.
L2 B–, black lead from "A" battery and yellow lead from "B" battery.
L3 A+, brown lead from "A" battery.
L4 Black lead to selenium rectifier, CR1.
L5 B+, red lead from CR1.
L6 Brown lead to filament dropping resistor, R9.
L7 White lead from AC interlock to R10.
L8 Blue lead to L11, ground.
L9 Blue lead from 3V4 plate to output trans., T2.
L10 Red lead to output transformer, T2.
L11 Blue lead to L8, ground.
White lead from AC interlock to lug 5 of ON-OFF switch.
Red lead from "B" battery to lug 7 of ON-OFF switch.

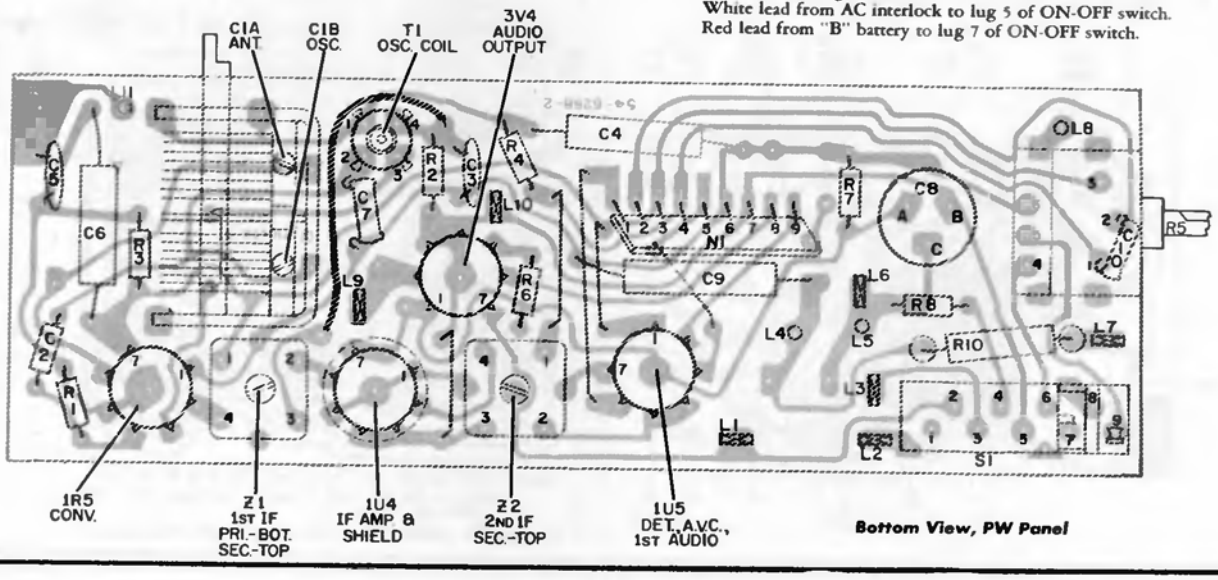


Bottom View, PW Panel

# PHILCO

## MODELS G-749, G-751, G-753 and G-755

*Frequency Range—540 KC to 1620 KC.*

*Intermediate Frequency—455 KC.*

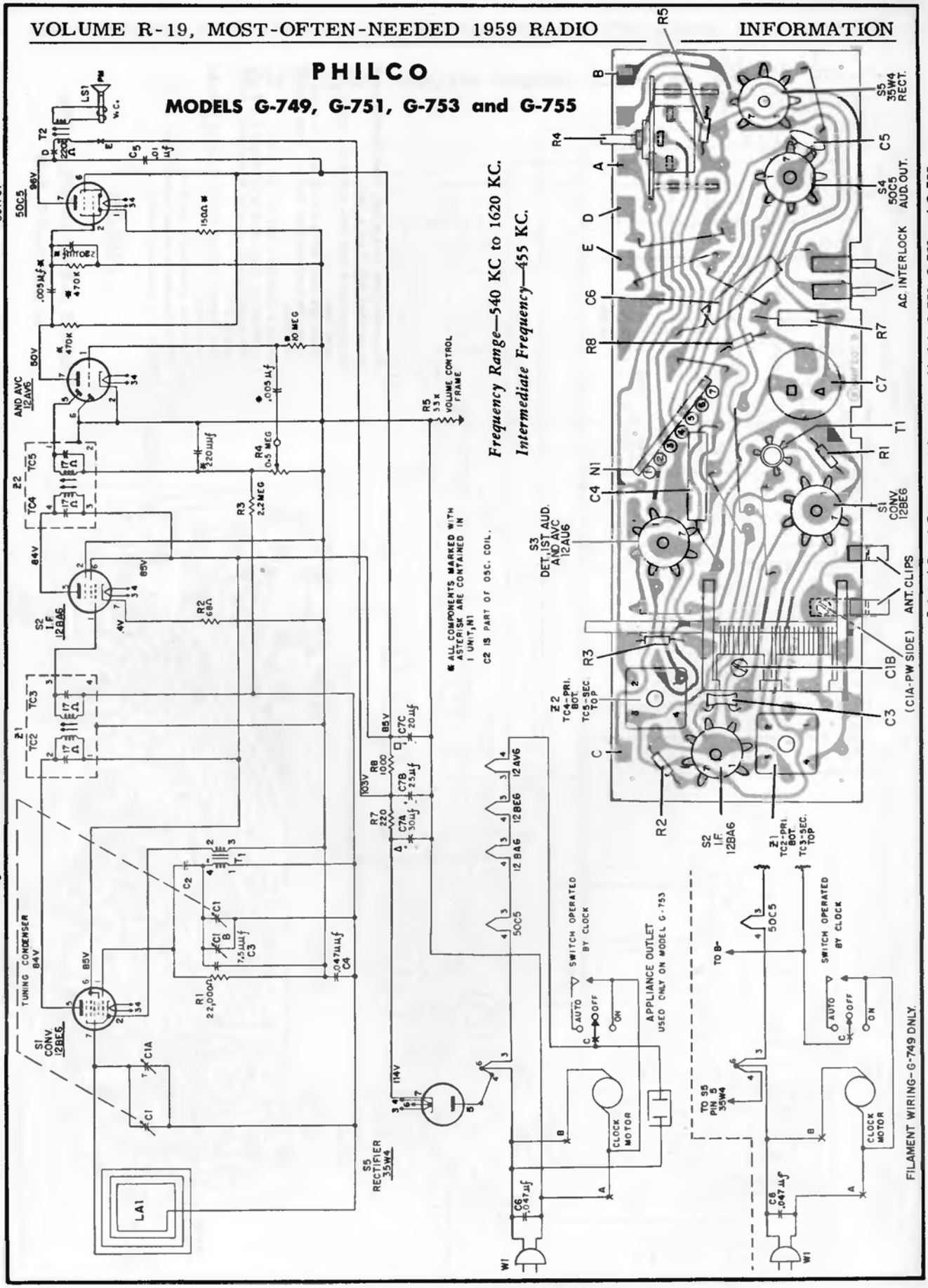


*Schematic Diagram — Models G-749, G-751, G-753 and G-755*

*Printed Panel Component Layout — Models G-751, G-753 and G-755*

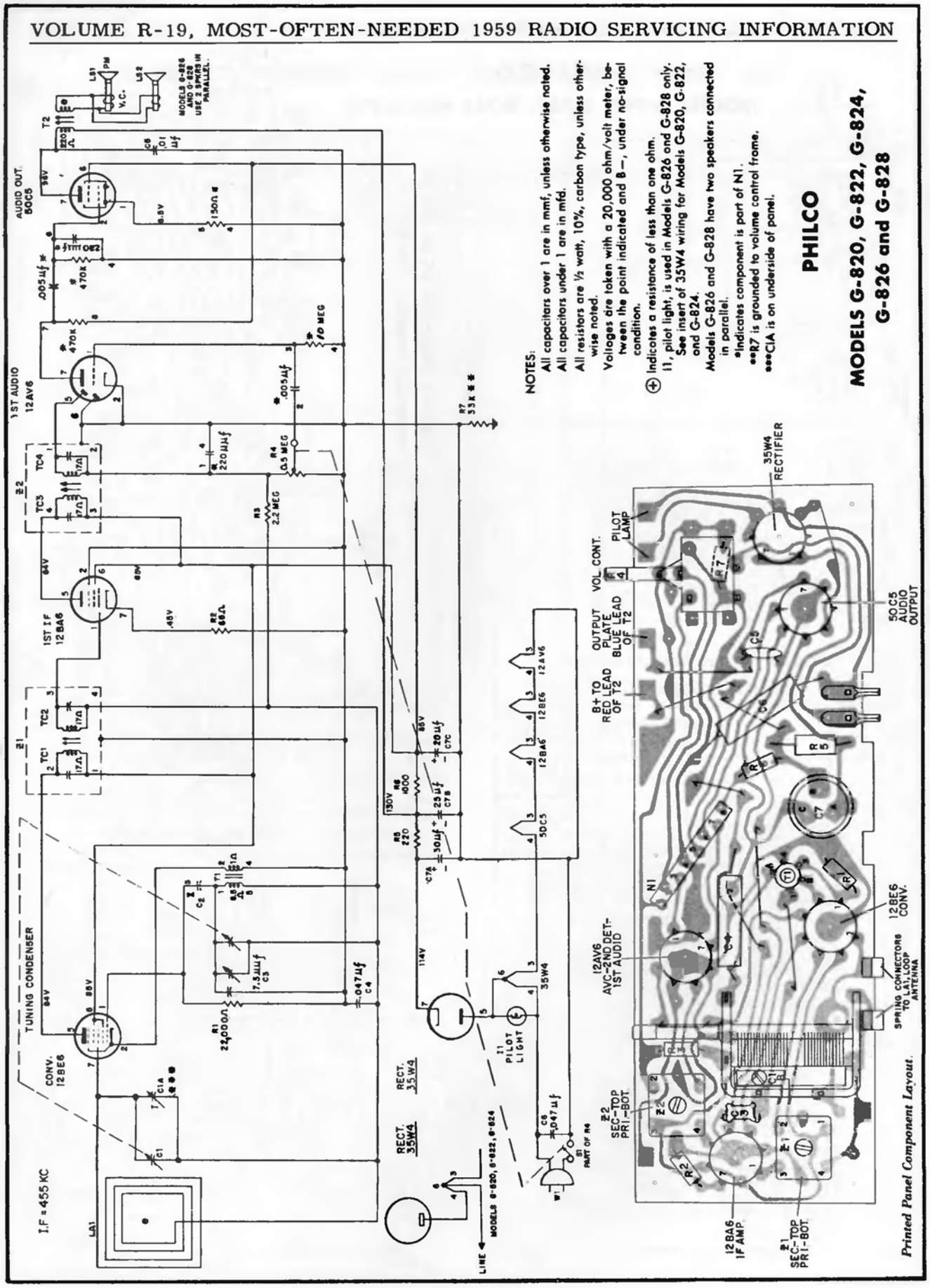
AUDIO OUT. 50C5
1ST AUDIO 12AV6
1ST I.F. 12BA6
CONV. 12BE6
TUNING CONDENSER
I.F. = 455 KC
RECT. 35W4
PILOT LIGHT
MODELS G-826 AND G-828 USE 2 SPKRS IN PARALLEL.
MODELS G-820, G-822, G-824
LINE
PART OF R4
NOTES:
All capacitors over 1 are in mmf, unless otherwise noted.
All capacitors under 1 are in mfd.
All resistors are ½ watt, 10%, carbon type, unless otherwise noted.
Voltages are taken with a 20,000 ohm/volt meter, between the point indicated and B—, under no-signal condition.
⊕ Indicates a resistance of less than one ohm.
I1, pilot light, is used in Models G-826 and G-828 only. See insert of 35W4 wiring for Models G-820, G-822, and G-824.
Models G-826 and G-828 have two speakers connected in parallel.
*Indicates component is part of N1.
**R7 is grounded to volume control frame.
***C1A is on underside of panel.
PHILCO
MODELS G-820, G-822, G-824, G-826 and G-828
35W4 RECTIFIER
PILOT LAMP
VOL. CONT.
OUTPUT PLATE BLUE LEAD OF T2
B+ TO RED LEAD OF T2
50C5 AUDIO OUTPUT
12AV6 AVC-2ND DET.-1ST AUDIO
12BE6 CONV.
SPRING CONNECTORS TO LAT. LOOP ANTENNA
Z2 SEC.-TOP PRI.-BOT.
12BA6 IF AMP.
Z1 SEC.-TOP PRI.-BOT.
Printed Panel Component Layout.

# PHILCO AM/FM MODEL G-974

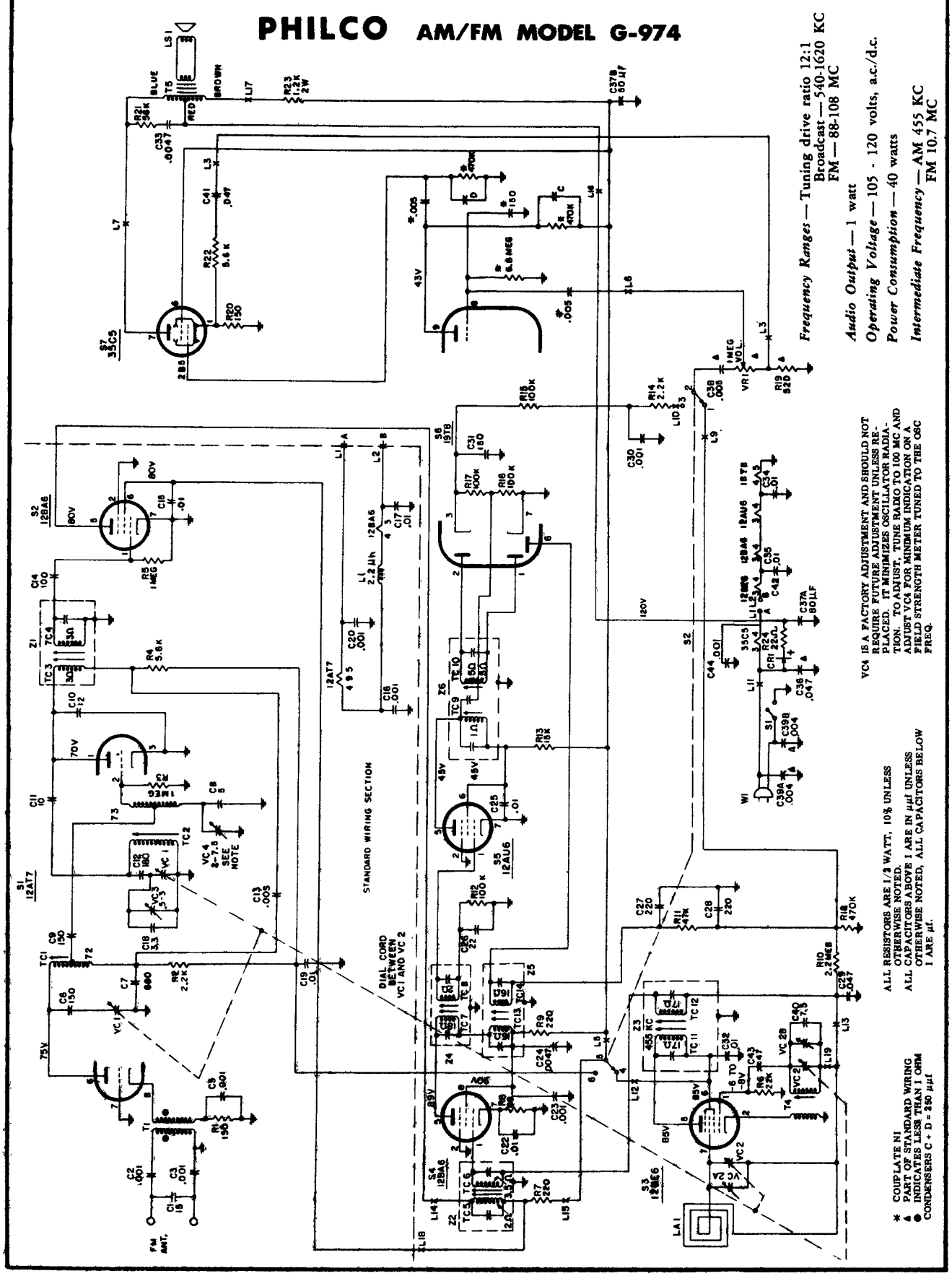

# PHILCO RADIO AM/FM MODEL G-978

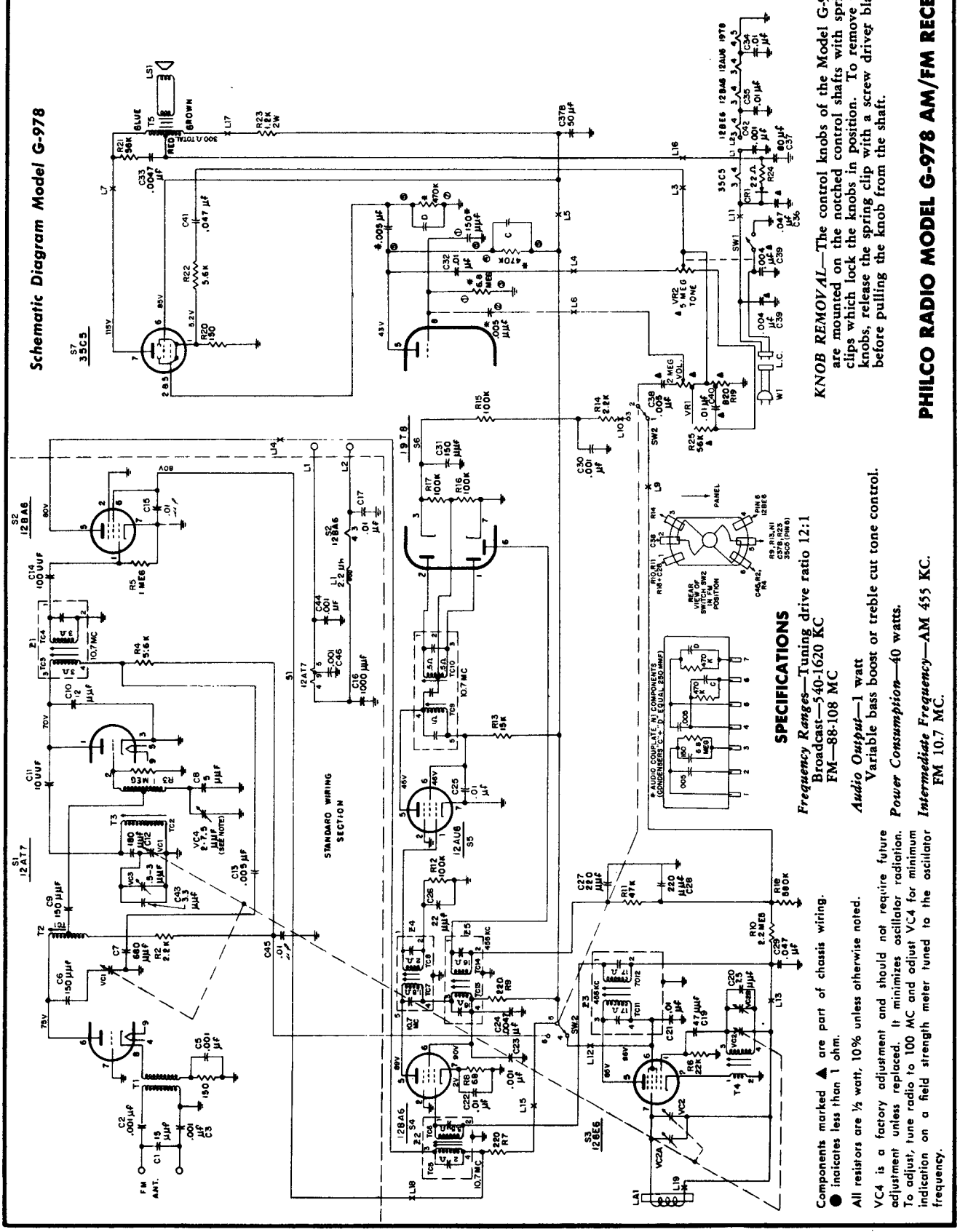


*KNOB REMOVAL*—The control knobs of the Model G-978 are mounted on the notched control shafts with spring clips which lock the knobs in position. To remove the knobs, release the spring clip with a screw driver blade before pulling the knob from the shaft.

## PHILCO RADIO MODEL G-978 AM/FM RECEIVER

### SPECIFICATIONS

*Frequency Ranges*—Tuning drive ratio 12:1
Broadcast—540-1620 KC
FM—88-108 MC

*Audio Output*—1 watt
Variable bass boost or treble cut tone control.

*Power Consumption*—40 watts.

*Intermediate Frequency*—AM 455 KC.
FM 10.7 MC.

Components marked ▲ are part of chassis wiring.
● indicates less than 1 ohm.

All resistors are ½ watt, 10% unless otherwise noted.

VC4 is a factory adjustment and should not require future adjustment unless replaced. It minimizes oscillator radiation. To adjust, tune radio to 100 MC and adjust VC4 for minimum indication on a field strength meter tuned to the oscillator frequency.

# PHILCO PHONOGRAPH

## MODEL G-1410

### SPECIFICATIONS

AUDIO OUTPUT—1.0 watt each channel.

OPERATING VOLTAGE—105-125 volts, 60 cycles a.c.

POWER CONSUMPTION—60 watts.

RECORD CHANGER–M-40, 4 speed automatic record changer with stereophonic pickup.

### VOLUME-BALANCE CONTROL

The volume-balance controls for the two amplifier channels are mounted in tandem with concentric shafts. The inner shaft is spring loaded and locked to the outer shaft. Turning the shaft of one control simultaneously turns the shaft of the other control. Pushing in the inner shaft unlocks the controls to permit individual volume control adjustment.

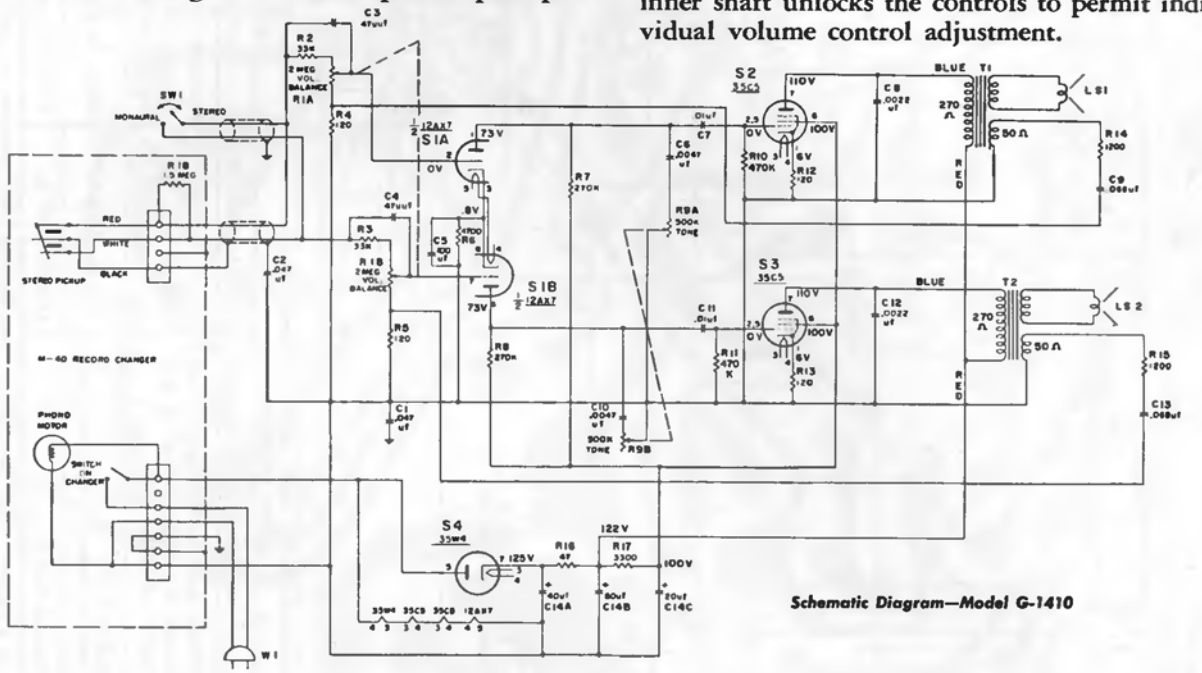


*Schematic Diagram—Model G-1410*

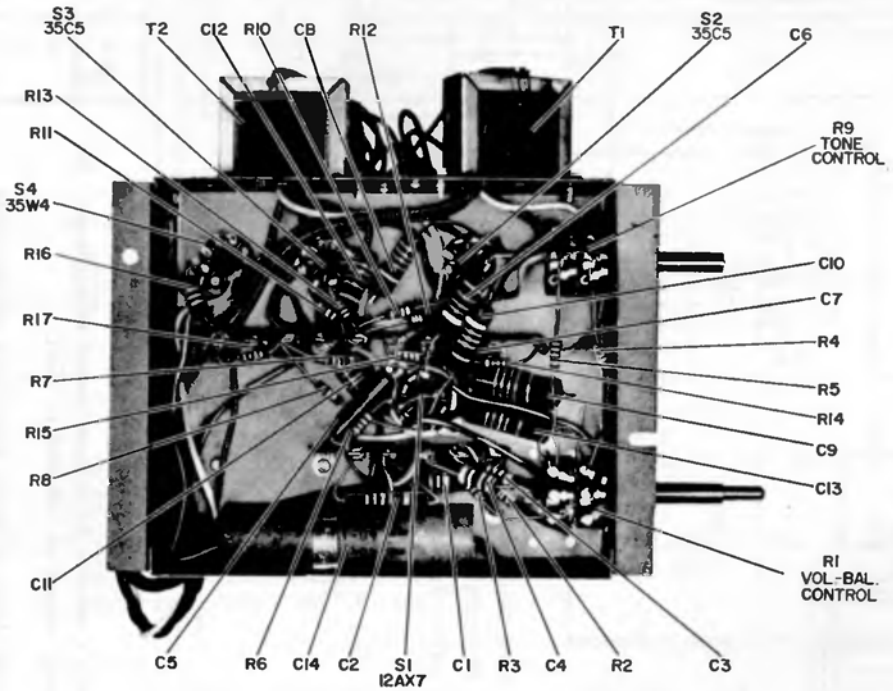


*Base View, Components Layout—Model G-1410*

# PHILCO

## MODEL G-1409, CODE 124

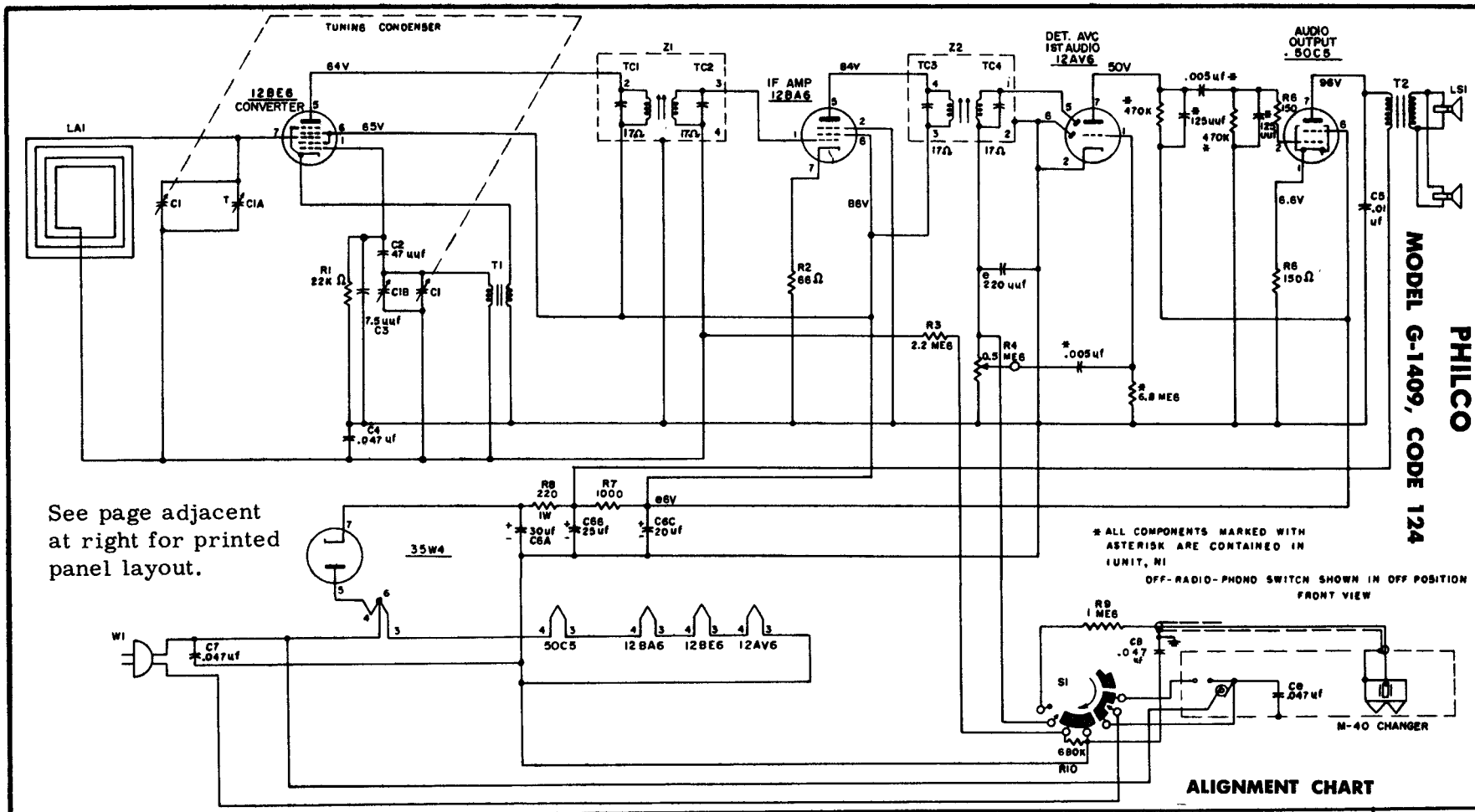


See page adjacent at right for printed panel layout.

## ALIGNMENT PROCEDURE

*Radio Controls*—Set volume control to maximum. Set tuning control as indicated in chart.

*Output Meter*—Connect across voice coil terminals.

*Signal Generator*—Connect generator and set frequency as indicated in chart. Use modulated output, 30%.

*Output Level*—During alignment, adjust signal-generator output to hold output-meter reading below .5 volts.

## ALIGNMENT CHART

| STEP | SIGNAL GENERATOR | | RADIO | | ADJUST |
|---|---|---|---|---|---|
| | CONNECTION TO RADIO | DIAL SETTING | DIAL SETTING | SPECIAL INSTRUCTIONS | |
| 1. | Ground lead to B—; output lead through a .1 mf condenser to grid (pin 7) of 12BE6. | 455 kc. | Tuning gang fully open. | Adjust tuning cores, in order given, for max. output. TC2 and TC4 are located on top of transformers. | TC4—2nd i-f sec.<br>TC3—2nd i-f pri.<br>TC2—1st i-f sec.<br>TC1—1st i-f pri. |
| 2. | Radiating loop (See note below). | 1620 kc. | 1620 kc. * | Adjust for maximum output. | C1-B—osc. |
| 3. | Same as Step 2. | 1500 kc. | 1500 kc. | Adjust for maximum output. | C1-A—aerial. |

NOTE: Make up a 6-8 turn, 6 inch diameter loop from insulated wire, connected to signal-generator leads, and place near radio loop.

* For proper adjustment of the oscillator trimmer, fully open the tuning gang and insert a .006 inch non-metallic shim between the heel of the rotor and the top of the stator plates. Close the tuning gang sufficiently to hold the shim in place, and then remove

PHILCO Model G-1409
Printed Panel Layout

C9
TC2 SEC. ON TOP
TC1 PRI. ON BOT.
Z1
R2
12BA6 I.F. AMP.
TC4 SEC. ON TOP
TC3 PRI. ON BOT.
R3
C4
R4
R10
12AV6
N1
Z2
C1B OSC.
C2
C1A ANT.
C3
R1
12BE6 CONV.
R7
C7
C5
R6
35W4
R5
50C5
R8
C6

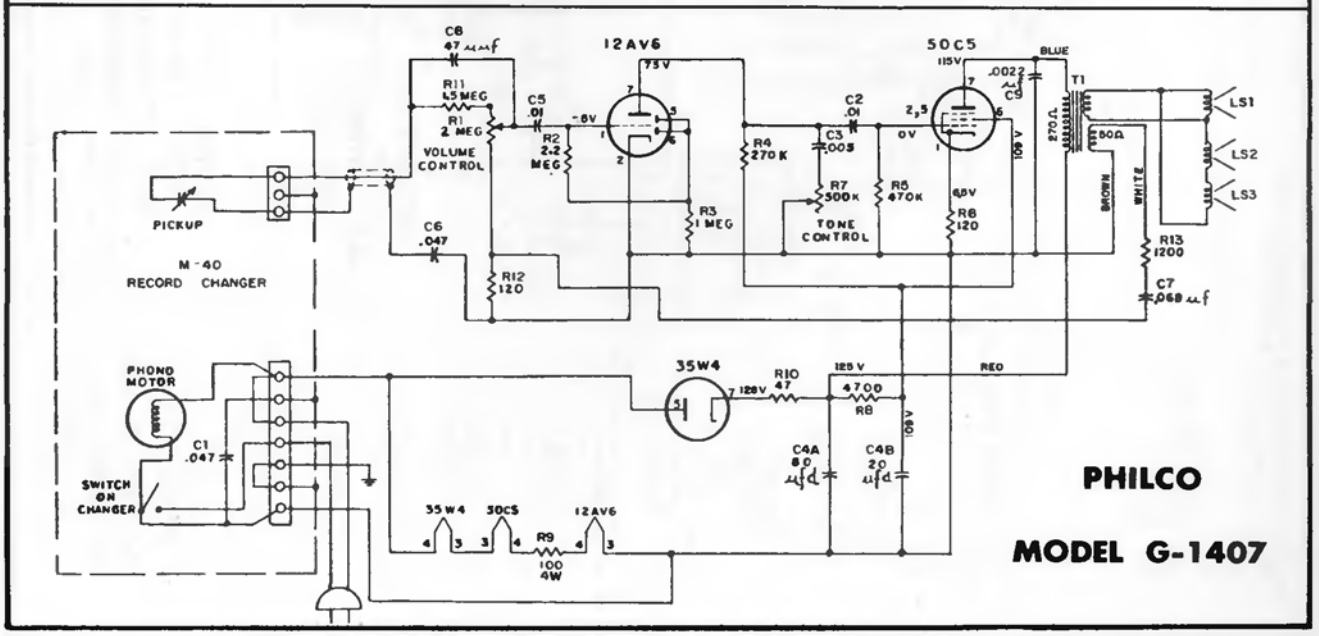

## PHILCO MODELS— G-1606, G-1606S-123 and SA-1000

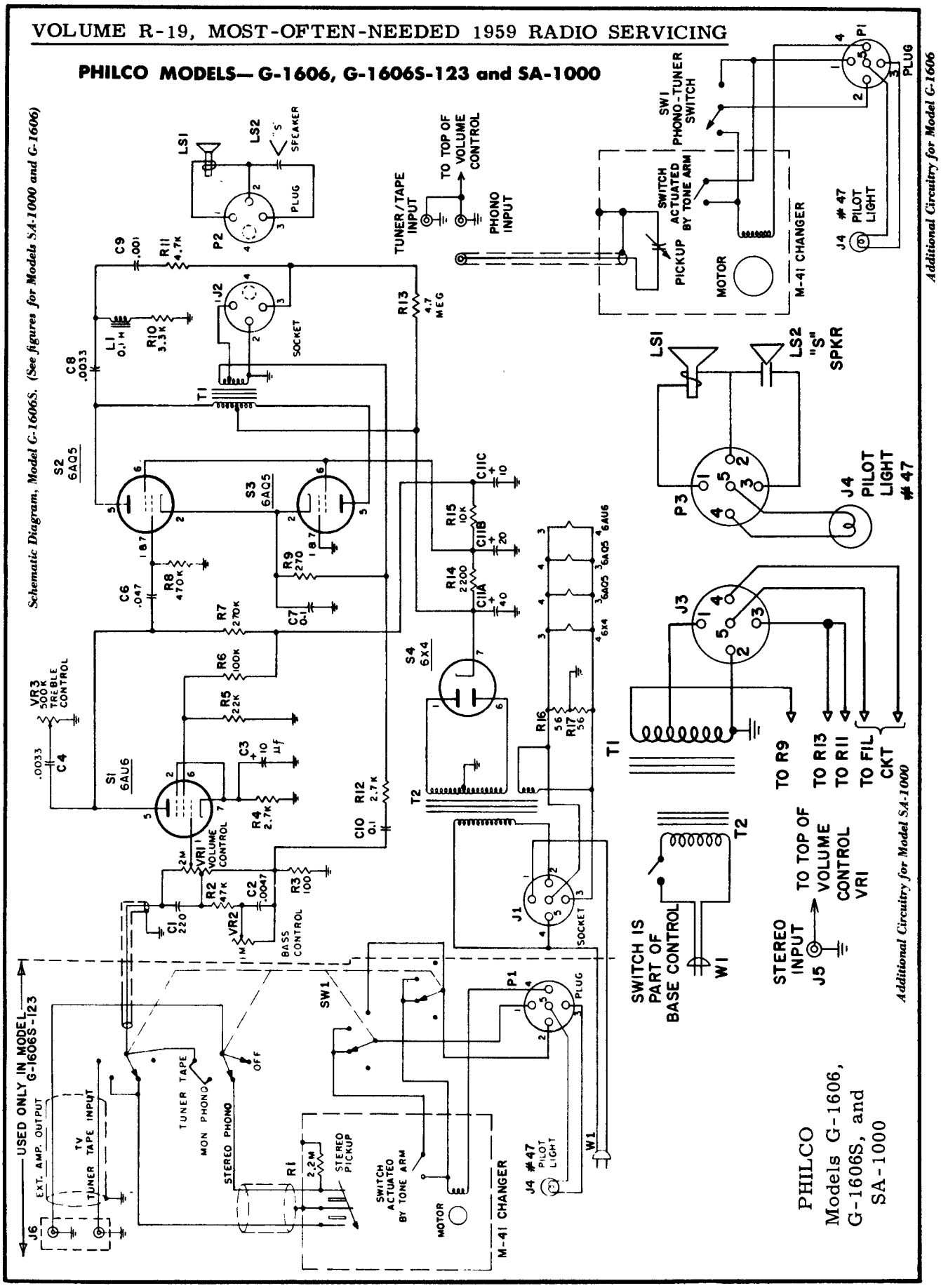

# PHILCO

## MODELS G-1708S, G-1806S, G-1807S, G-1808S, G-1809S, G-1811S, G-1813S, and SA-2000

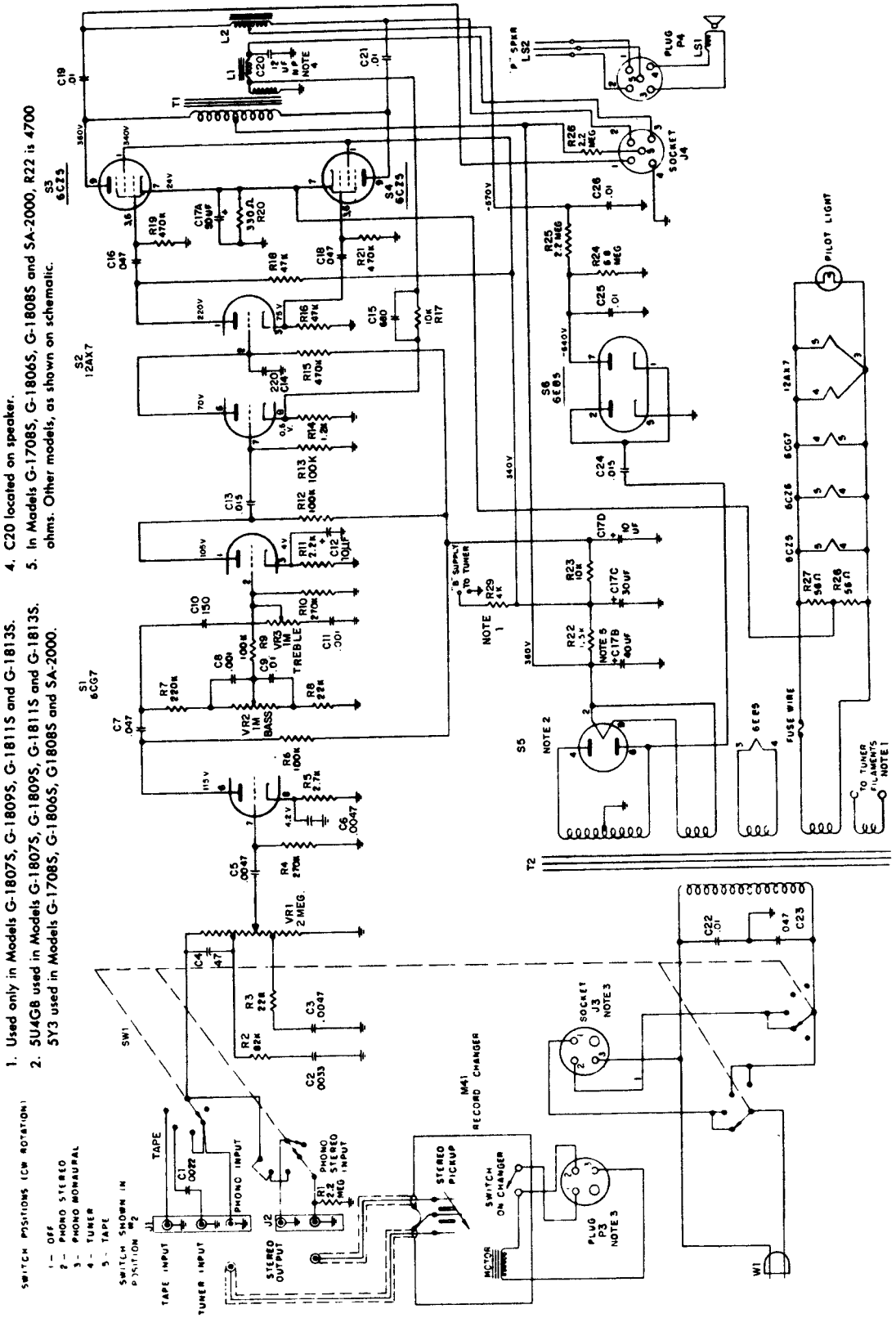


PHILCO HI-FIDELITY PHONOGRAPH MODELS—
G-1708S, G-1806S, G-1807S, G-1808S, G-1809S, G-1811S, G-1813S and SA-2000

# PHILCO HI-FIDELITY PHONOGRAPHS MODELS G-1706, G-1706S, G-1707, G-1707S, SA-1500 and RT-150

(Continued on the page adjacent at right)

## SPECIFICATIONS

NOTE: The G-1706 contains a three-tube-plus rectifier amplifier and a type M-41 record changer. The G-1706S is similar to the G-1706 except the function switch has a stereo position and the M-41 record changer has a stereo cartridge. The G-1707 is a G-1706 with changes to accept a radio tuner. The G-1707 includes an RT-150 AM-FM tuner. The G-1707S is similar to the G-1707 except the function switch has a stereo position and the M-41 record changer has a stereo cartridge. The SA-1500 is the slave amplifier used with the G-1706S or the G-1707S for stereo. Its amplifier is similar to the G-1706 with a different function switch and a-c wiring changes necessitated by the absence of a record changer.

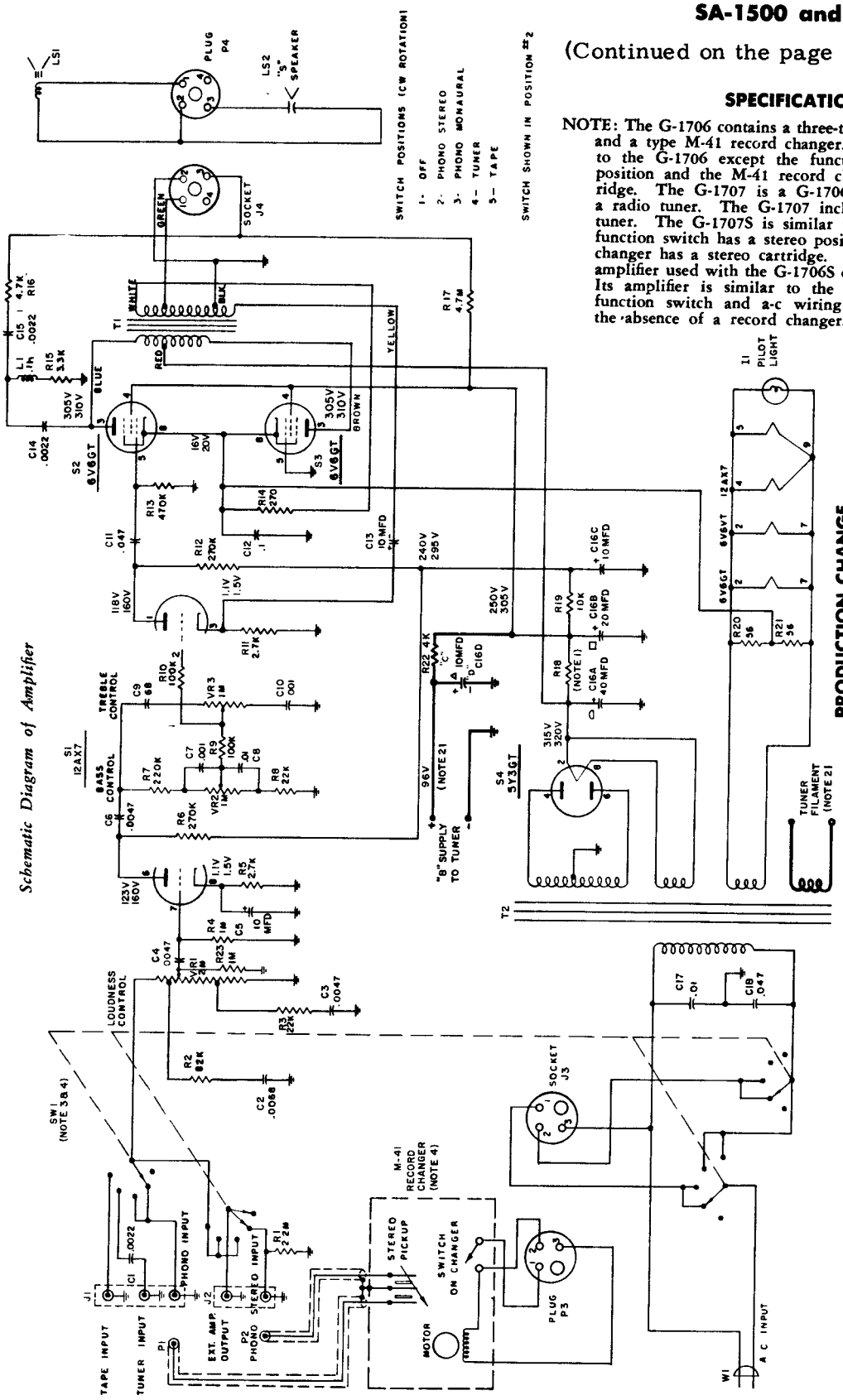


## PRODUCTION CHANGE

In later models, C7, C8, C9, C10, R7 and R8 of the amplifier are replaced by network, Philco part no. 58-1893. The physical location of C4 and R10 are changed to accommodate the network.

*Circuit* — Three-tube audio amplifier plus a rectifier. The amplifier includes bass, treble and loudness controls and a selector switch. Inputs are provided for phono stereo, (G-1706S and G-1707S only) phono monaural, tuner and tape recorder. Models G-1707 and G-1707S use the RT-150 AM-FM tuner. This tuner contains a six-tube superheterodyne circuit. Its operating voltages, B+ and filament, are supplied by the amplifier.

### NOTES

1. In models G-1706, G-1706S and SA-1500, R18 is 3.3K. In models G-1707 and G-1707S, R18 is 1.5K.
2. Used in models G-1707 and G-1707S only.
3. Models G-1706 and G-1707 do not have the stereo positions. These models differ from the schematic in that they use a four-position function switch with positions for OFF, PHONO, TAPE and TUNER. C2 and R1 are not required in these models.
4. Model SA-1500 does not have a record changer or associated ac wiring. This model uses a four-position function switch with positions for OFF, MAIN, AUX 1 and AUX 2. C2, R1 and R2 are not required in this model.
5. Voltage measurements are taken with a VTVM under no-signal conditions.
6. Two voltages are shown for each test point, the upper one is for the G-1707 and G-1707S, the lower one is for the remaining models.

# PHILCO HI-FIDELITY PHONOGRAPHS

## MODELS G-1706, G-1706S, G-1707, G-1707S, SA-1500 and RT-150

(Continued from the page adjacent at left.)

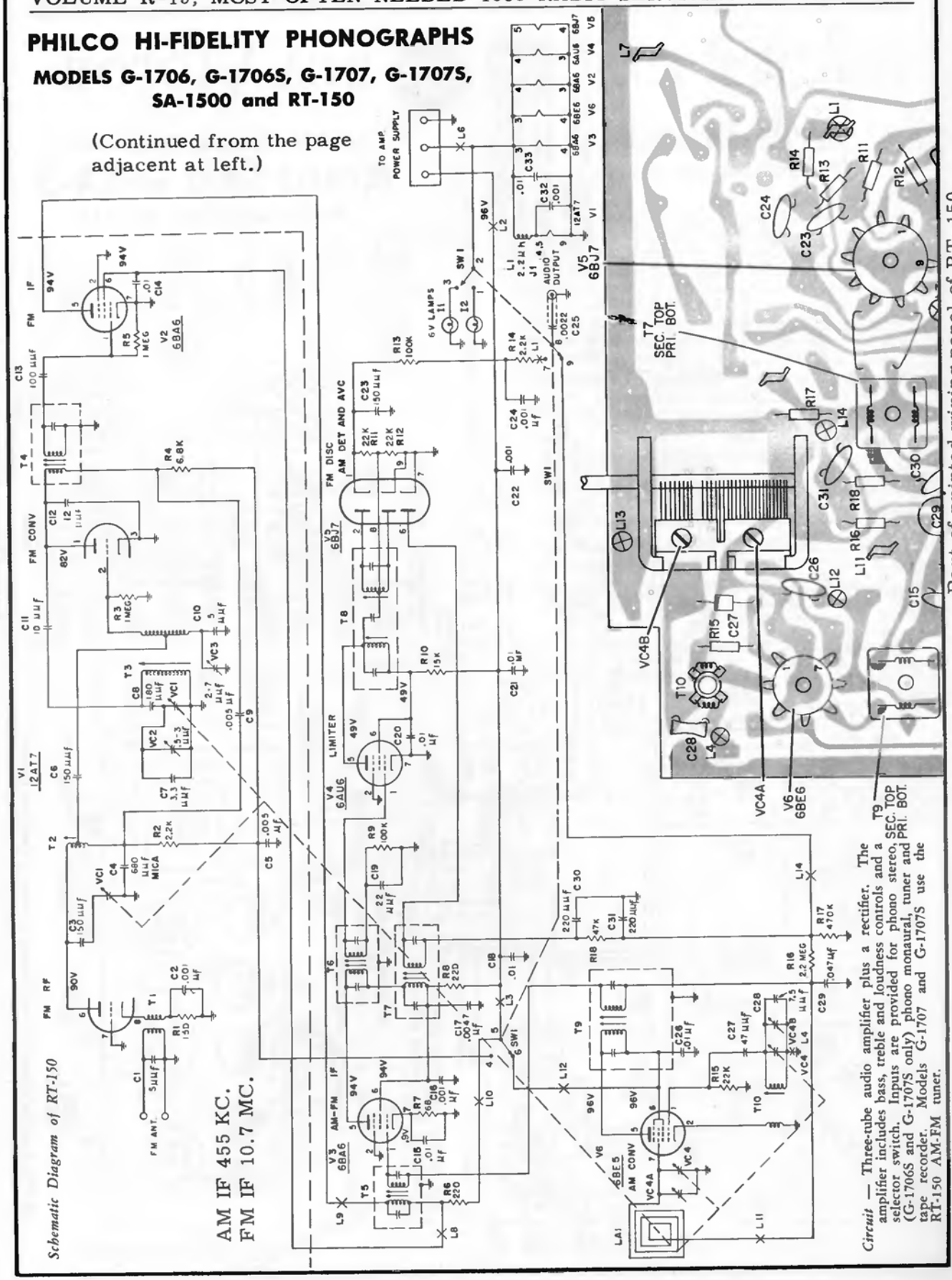

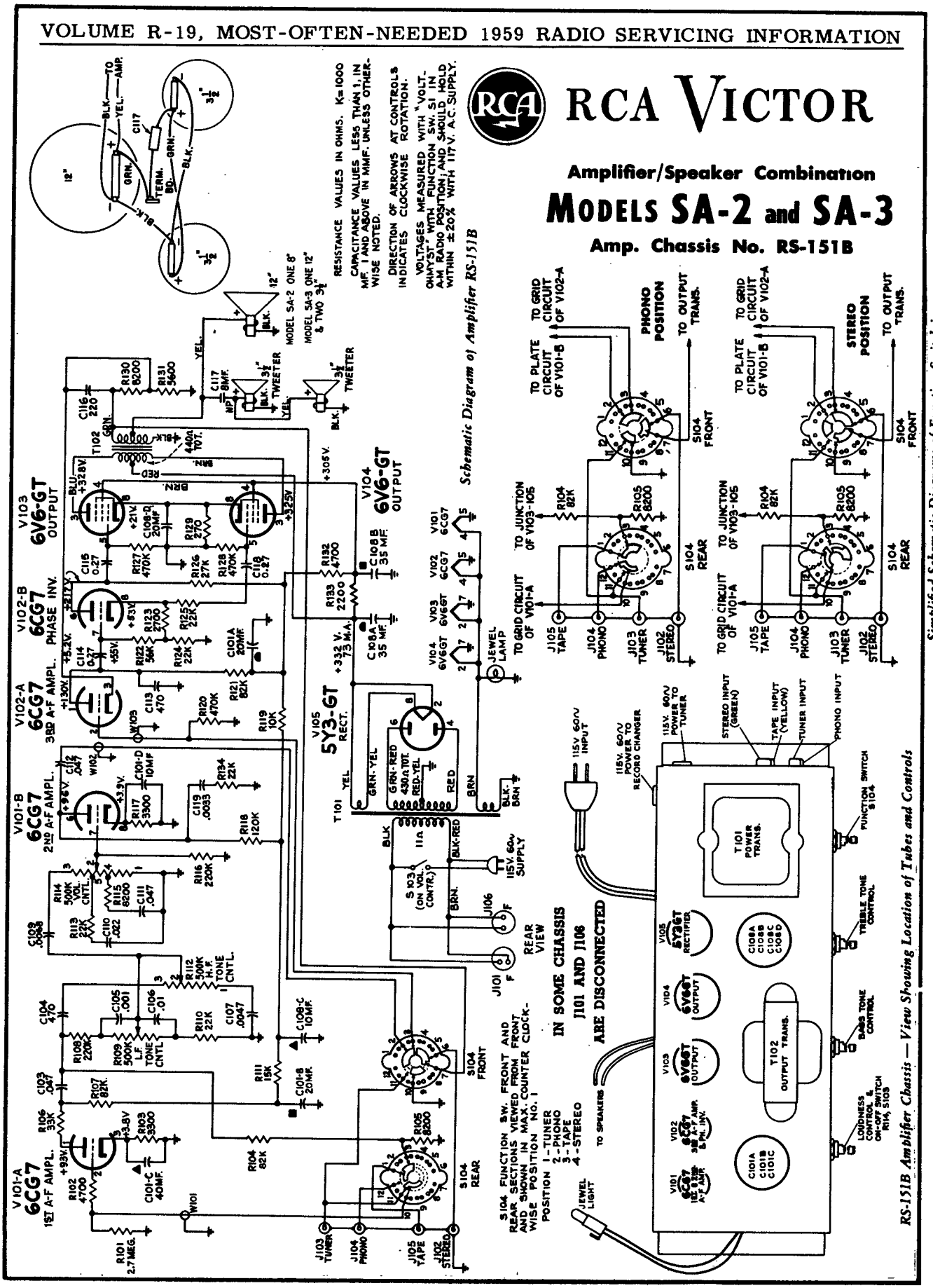
RCA VICTOR
Amplifier/Speaker Combination
MODELS SA-2 and SA-3
Amp. Chassis No. RS-151B
RESISTANCE VALUES IN OHMS. K=1000
CAPACITANCE VALUES LESS THAN 1. IN MF. I AND ABOVE IN MMF. UNLESS OTHERWISE NOTED.
DIRECTION OF ARROWS AT CONTROLS INDICATES CLOCKWISE ROTATION.
VOLTAGES MEASURED WITH "VOLT-OHMYST" WITH FUNCTION SW. S1 IN A-M RADIO POSITION; AND SHOULD HOLD WITHIN ±20% WITH 117 V. A.C. SUPPLY.
MODEL SA-2 ONE 8"
MODEL SA-3 ONE 12" & TWO 3½"
12"
3½" TWEETER
V101-A 6CG7 1ST A-F AMPL.
V101-B 6CG7 2ND A-F AMPL.
V102-A 6CG7 3RD A-F AMPL.
V102-B 6CG7 PHASE INV.
V103 6V6-GT OUTPUT
V104 6V6-GT OUTPUT
V105 5Y3-GT RECT.
T101
T102
T101 POWER TRANS.
T102 OUTPUT TRANS.
S103 (ON VOL. CONTR.)
S104 FRONT
S104 REAR
S104 FUNCTION SW. FRONT AND REAR SECTIONS VIEWED FROM FRONT AND SHOWN IN MAX. COUNTER CLOCKWISE POSITION NO. 1
POSITION 1-TUNER
2-PHONO
3-TAPE
4-STEREO
IN SOME CHASSIS J101 AND J106 ARE DISCONNECTED
REAR VIEW
J101
J102 STEREO
J103 TUNER
J104 PHONO
J105 TAPE
J106
JEWEL LAMP
JEWEL LIGHT
TO SPEAKERS
115V. 60~ INPUT
115V. 60~ SUPPLY
115V. 60~ POWER TO RECORD CHANGER
115V. 60~ POWER TO TUNER
STEREO INPUT (GREEN)
TAPE INPUT (YELLOW)
TUNER INPUT
PHONO INPUT
FUNCTION SWITCH S104
TREBLE TONE CONTROL
BASS TONE CONTROL
LOUDNESS CONTROL & ON-OFF SWITCH R114, S103
PHONO POSITION
STEREO POSITION
TO PLATE CIRCUIT OF V101-B
TO GRID CIRCUIT OF V102-A
TO OUTPUT TRANS.
TO JUNCTION OF V103-105
TO GRID CIRCUIT OF V101-A
Schematic Diagram of Amplifier RS-151B
Simplified Schematic Diagrams of Function Switch in Amplifier Chassis RS-151B
RS-151B Amplifier Chassis — View Showing Location of Tubes and Controls

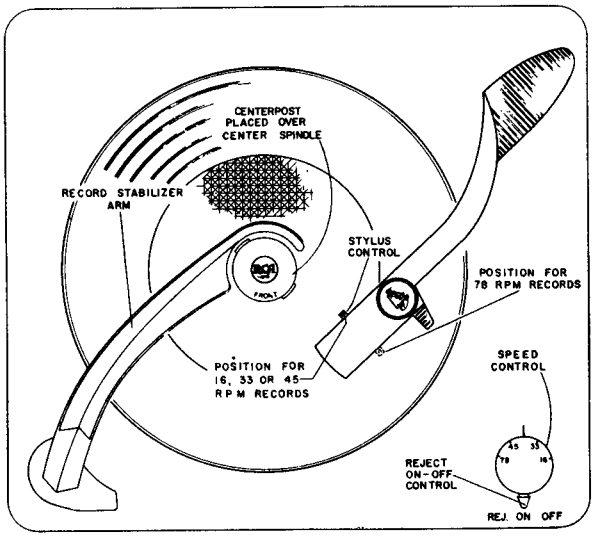


*Record Changer Controls*

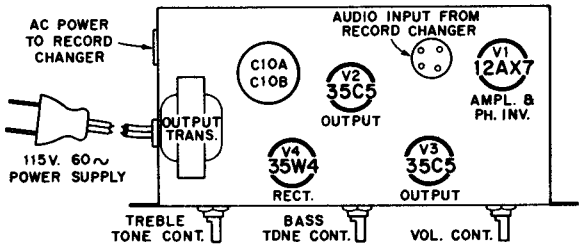


*View of Amplifier Chassis Showing Location of Tubes and Major Components*

# RCA VICTOR

## MODEL HF-99

### Chassis No. RS-157D

The record changer has a dual control on the motorboard and a stylus selector control on the pickup arm. The metal lever of the dual control is the OFF-ON-REJECT control. Turning this lever to the center position energizes the motor and starts the turntable; when turned to the clockwise position it starts the mechanism into complete automatic operation. The mechanism will shut off automatically after the last record has been played but can be shut off manually by turning this lever counter-clockwise.

The circular knob of the dual control is the speed control. It has four positions: "16", "33", "45", "78", to select the turntable speed desired and a neutral ("N") position.

### CRITICAL LEAD DRESS

1. Dress all heater leads and power cord close to chassis and away from 12AX7 tube socket and phono input jack to maintain low hum level.
2. Keep shielded lead W1, including shield connections, as short as possible.
3. Dress record changer power cable and pickup cable as far apart as possible to minimize hum pickup.

NOTE—The "ON-OFF" switch is not part of the volume control. The record changer must be "ON" for power to be applied to the amplifier.

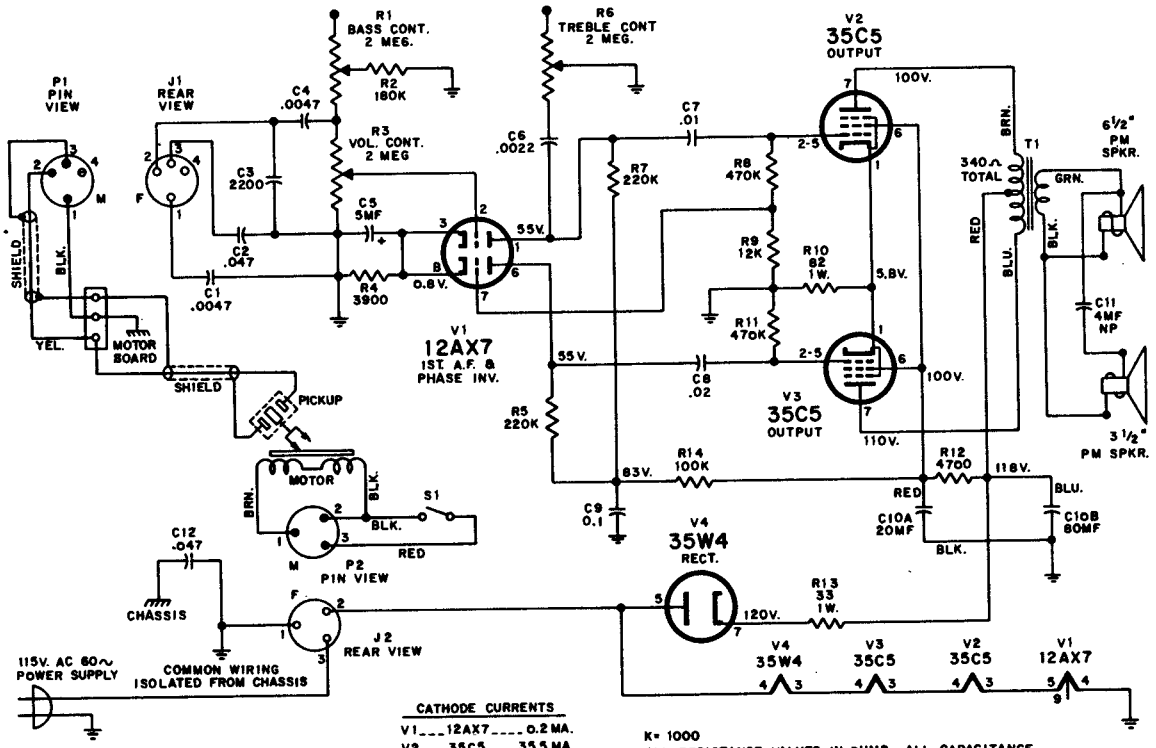


CATHODE CURRENTS

| | | |
|---|---|---|
| V1 | 12AX7 | 0.2 MA. |
| V2 | 35C5 | 35.5 MA. |
| V3 | 35C5 | 35.5 MA. |
| V4 | 35W4 | 75.0 MA. |

K= 1000
ALL RESISTANCE VALUES IN OHMS. ALL CAPACITANCE VALUES LESS THAN 1.0 IN MF AND 1.0 B ABOVE IN MMF EXCEPT AS INDICATED.

VOLTAGES MEASURED TO COMMON WIRING WITH "VOLTOHMYST" AND SHOULD HOLD WITHIN ±20%.

# RCA VICTOR

## SHP-11 STEREO RECORD PLAYER
Chassis RS-171A

## SHS-11 SPEAKER CABINET

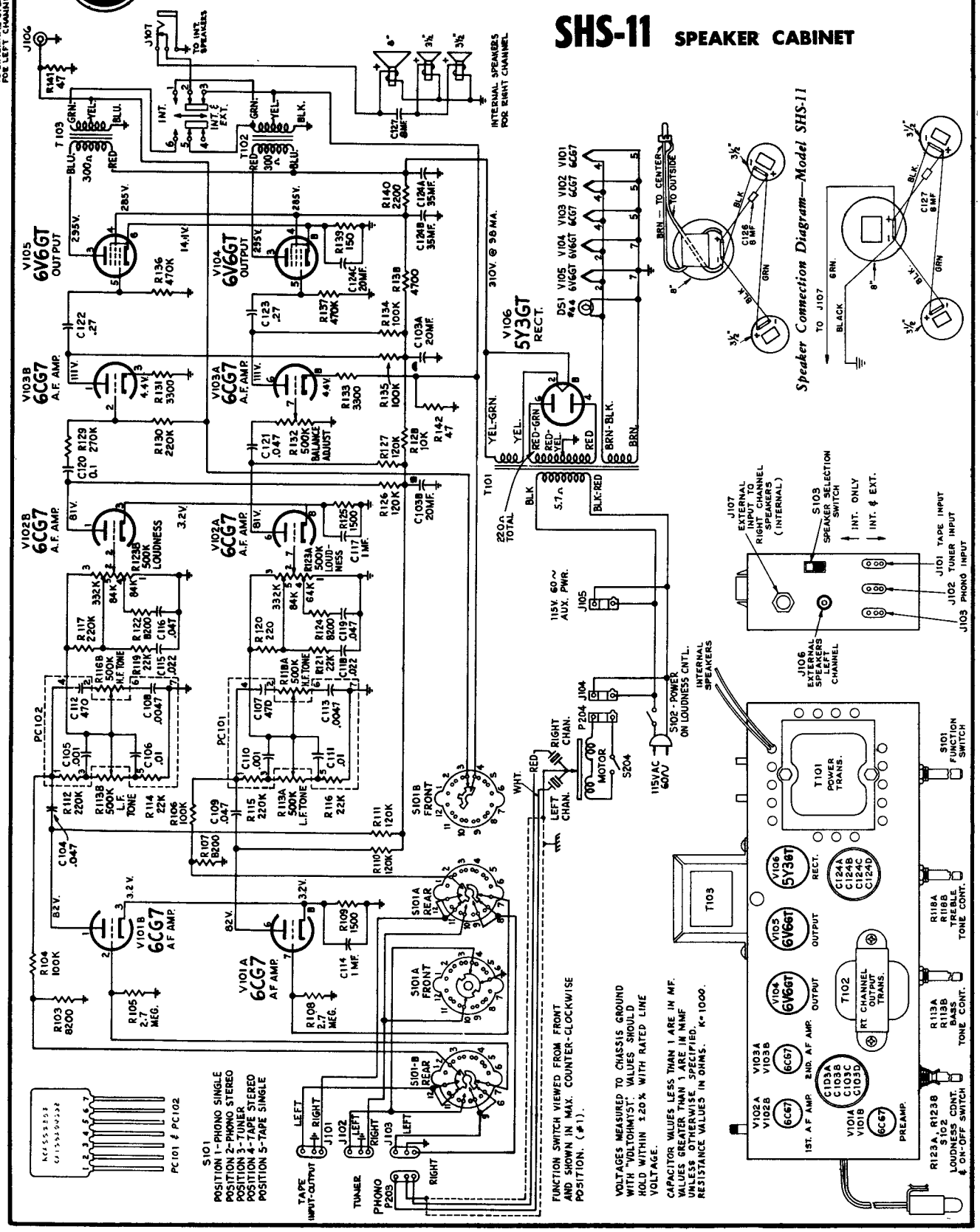

# RCA VICTOR

## MODELS SHP-12, SHP-13, TYPE AK-1

**Chassis No. RS-172**

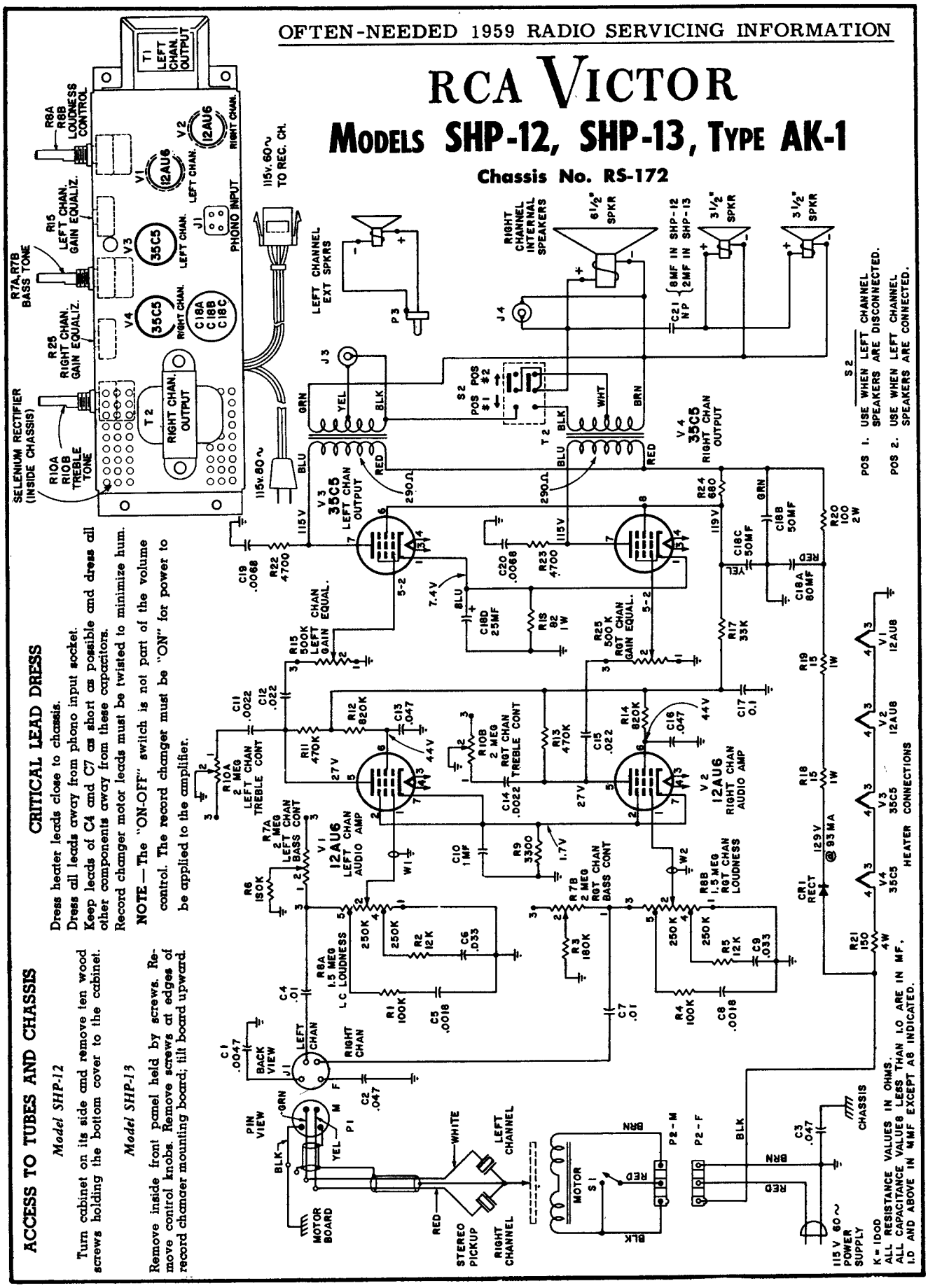


### CRITICAL LEAD DRESS

Dress heater leads close to chassis.
Dress all leads away from phono input socket.
Keep leads of C4 and C7 as short as possible and dress all other components away from these capacitors.
Record changer motor leads must be twisted to minimize hum.

**NOTE**—The "ON-OFF" switch is not part of the volume control. The record changer must be "ON" for power to be applied to the amplifier.

### ACCESS TO TUBES AND CHASSIS

*Model SHP-12*

Turn cabinet on its side and remove ten wood screws holding the bottom cover to the cabinet.

*Model SHP-13*

Remove inside front panel held by screws. Remove control knobs. Remove screws at edges of record changer mounting board; tilt board upward.

# RCA VICTOR

## MODEL SES-6

**Chassis No. RS-175**

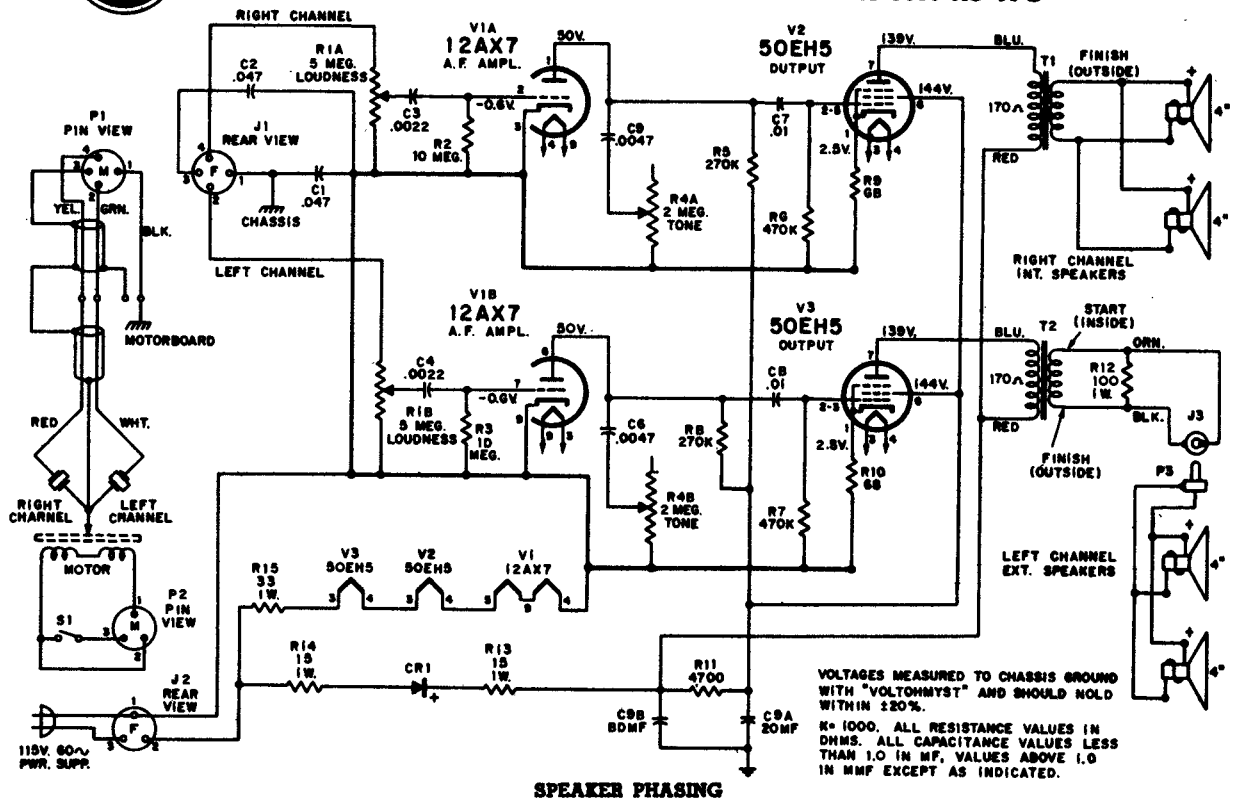


### SPEAKER PHASING

The two speaker systems must be properly connected in order to have in-phase sound outputs. Incorrect connections will be evidenced by a "null point" in the sound when playing a monaural record and listening from a point midway between the two speaker systems. For the same reason both speakers in each system should be phased with each other.

### REPLACEMENT PARTS

| Symbol No. | Stock No. | Description |
|---|---|---|
| | | **AMPLIFIER ASSEMBLY RS-175** |
| | | CAPACITORS: |
| C1, C2 | 73553 | paper, 0.047 mf., +100-0%, 400 v. |
| C3, C4 | 77953 | ceramic, 0.0022 mf., ±20%, 500 v. |
| C5, C6 | 103905 | ceramic, 0.0047 mf., ±20%, 1000 v. |
| C7, C8 | 73960 | ceramic, 0.01 mf., +100-0%, 500 v. |
| C9A, C9B | 101752 | electrolytic, 80/20 mf., 150/150 v. |
| CR1 | 106967 | Rectifier—Silicon |
| J1 | 101749 | Connector—4-contact female with retainer for pickup cable |
| J2 | 101750 | Connector—3-contact female with retainer for motor-cable |
| | | RESISTORS: |
| | | Fixed, Composition, unless otherwise specified: |
| R1A, R1B | 106969 | Control—Dual volume |
| R2, R3 | | 10 megohm, ±20%, ½ w. |
| R4A, R4B | 106968 | Control—Dual tone |
| R5 | | 270,000 ohm, ±10%, ½ w. |
| R6, R7 | | 470,000 ohm, ±20%, ½ w. |
| R8 | | 270,000 ohm, ±10%, ½ w. |
| R9, R10 | | 68 ohm, ±10%, ½ w. |
| R11 | | 4700 ohm, ±20%, ½ w. |
| R12 | | 100 ohm, ±20%, 1 w. |
| R13, R14 | | 15 ohm, ±20%, 1 w. |
| R15 | | 33 ohm, ±20%, 1 w. |
| T1, T2 | 100272 | Transformer—Output |
| | 70392 | Cable—AC power cable with plug |
| | 74822 | Socket—7-pin miniature for V2 and V3 |
| | 79799 | Socket—9-pin miniature for V1 |

| Symbol No. | No. Stock | Description |
|---|---|---|
| | | **RECORD CHANGER WIRING** |
| P1 | 101748 | Connector—4-contact male for pickup cable |
| P2 | 101747 | Connector—3-contact male for motor cable |
| | 101825 | Connector—Closed end, for motor lead |
| | 76301 | Switch—"ON-OFF" power switch |
| | | **SPEAKER ASSEMBLY** |
| | 31048 | Connector—Single contact male for remote speaker cable |
| | 79696-A | Speaker—4" PM |

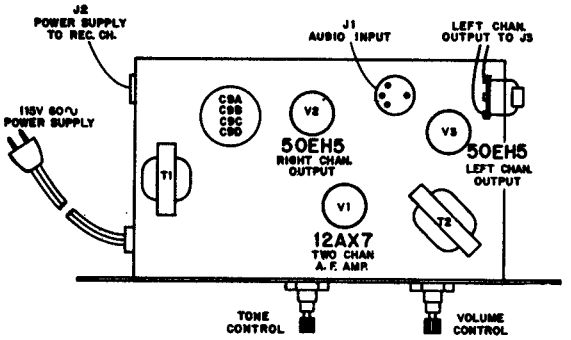


*View of Chassis Showing Location of Tubes and Major Components*

# RCA VICTOR MODEL SHP-14

**Chassis No. RS-175A**

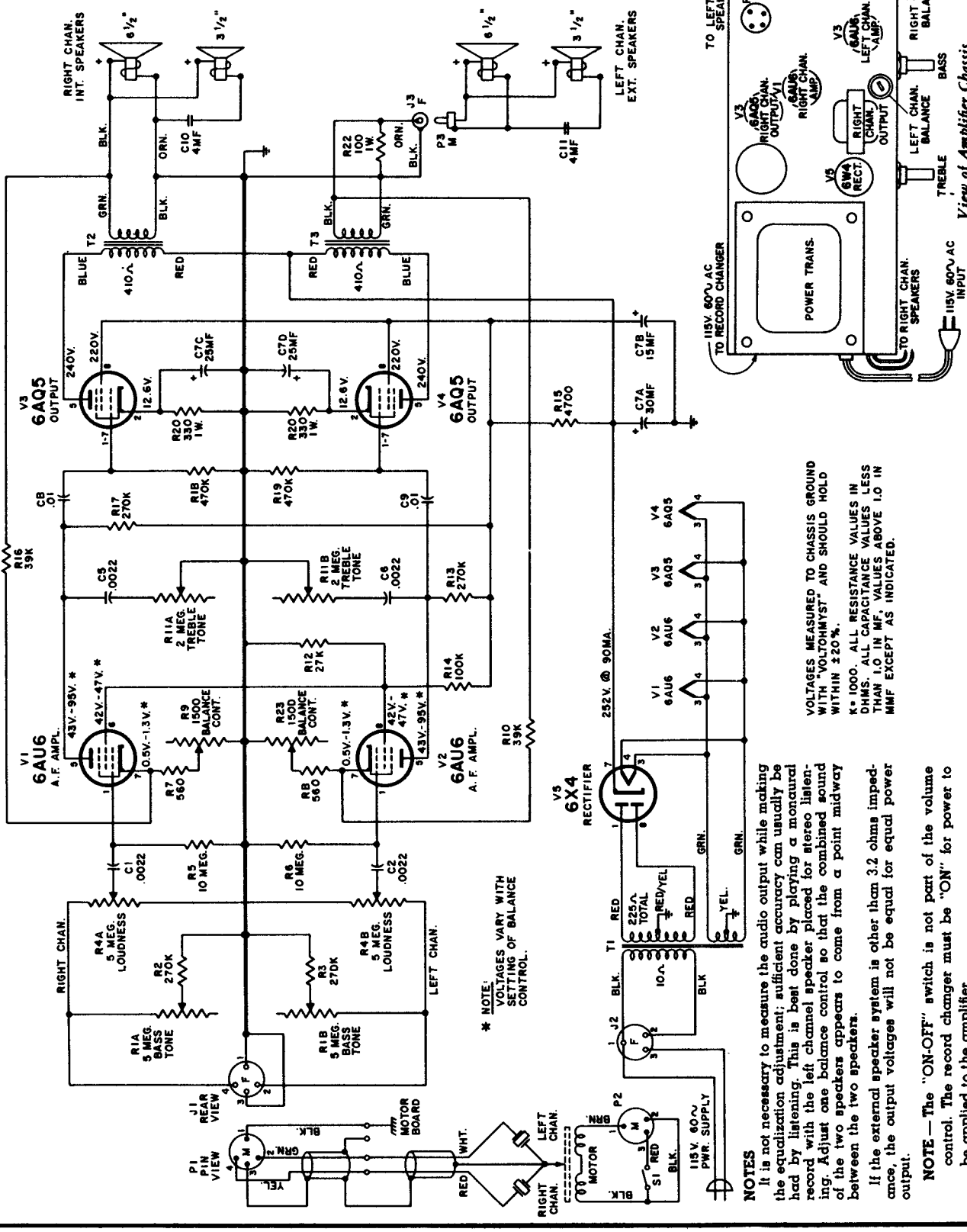


**NOTES**

It is not necessary to measure the audio output while making the equalization adjustment; sufficient accuracy can usually be had by listening. This is best done by playing a monaural record with the left channel speaker placed for stereo listening. Adjust one balance control so that the combined sound of the two speakers appears to come from a point midway between the two speakers.

If the external speaker system is other than 3.2 ohms impedance, the output voltages will not be equal for equal power output.

**NOTE**—The "ON-OFF" switch is not part of the volume control. The record changer must be "ON" for power to be applied to the amplifier.

# RCA VICTOR

## Model 9-TX-2, Chassis RC-1156C

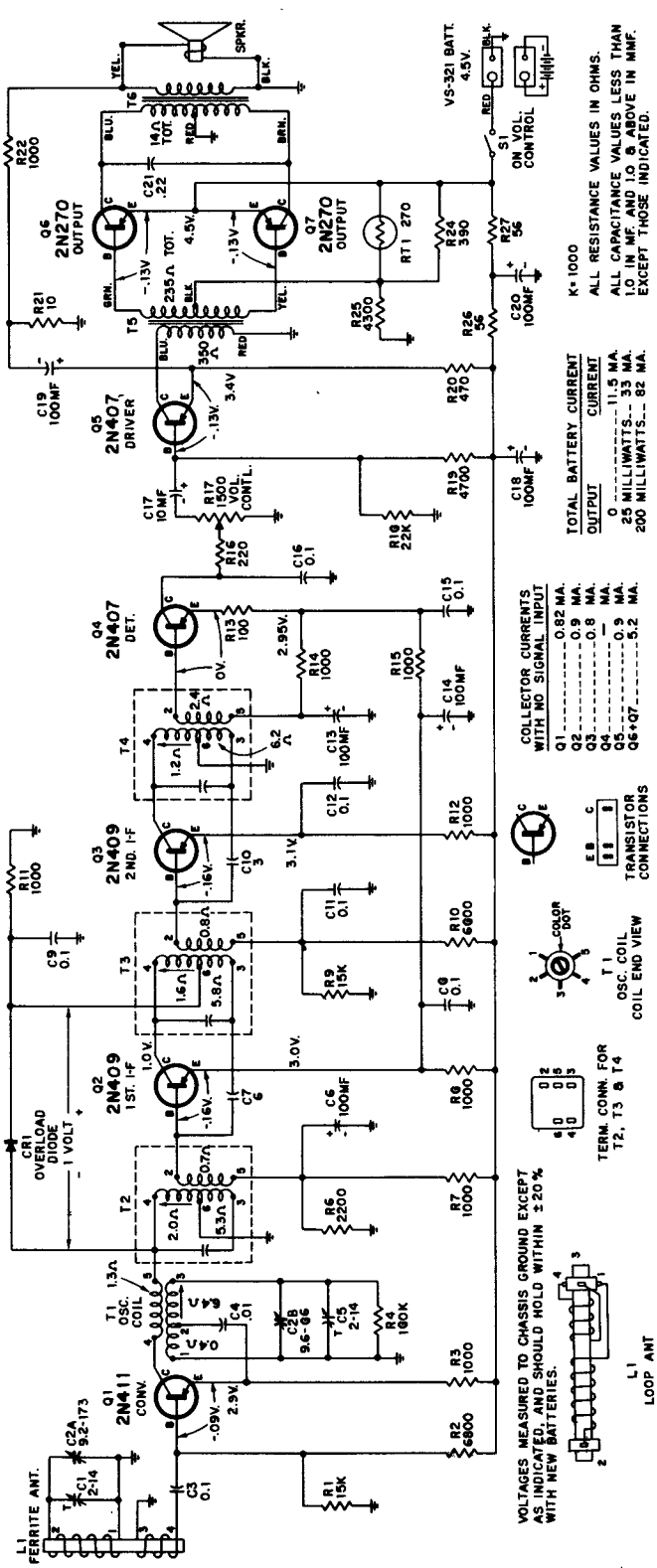


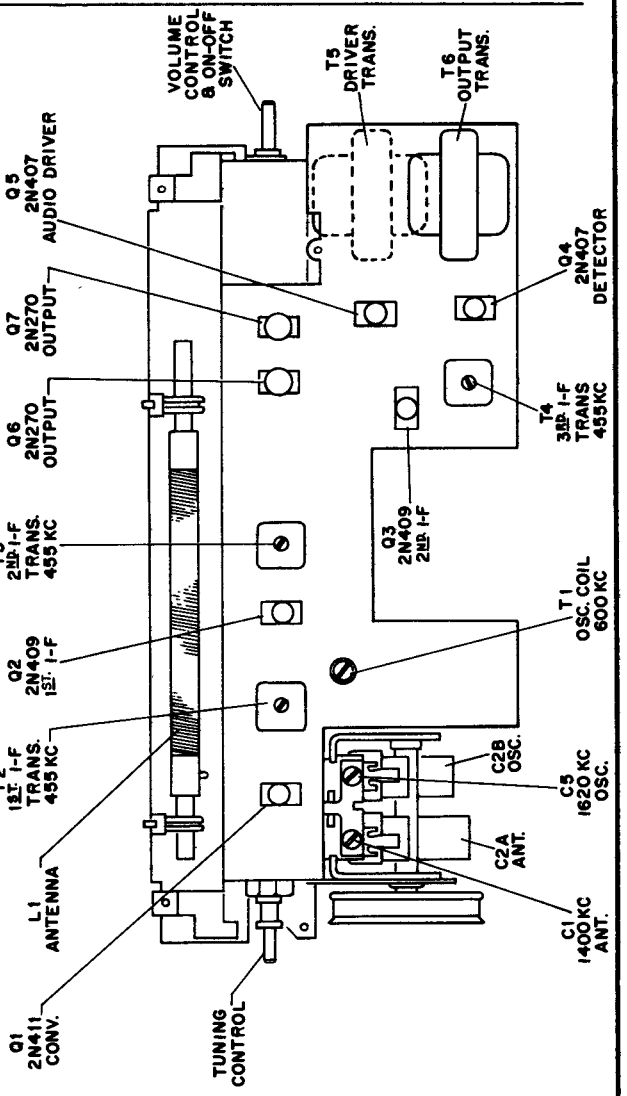


### CRITICAL LEAD DRESS

1. Dress all bus and non-insulated pigtail leads away from chassis ground and other components to prevent shorts.
2. Dress loop antenna leads direct and away from chassis, all other insulated leads down against chassis.
3. Dress RT1 (thermistor) away from all other components.
4. Maintain reasonably short pigtail leads on components associated with the detector circuit, to limit 910 kc "tweet."
5. Insure good grounding of shield cover.
6. Dress components which are enclosed in shielded compartment in such manner that short circuits are prevented.

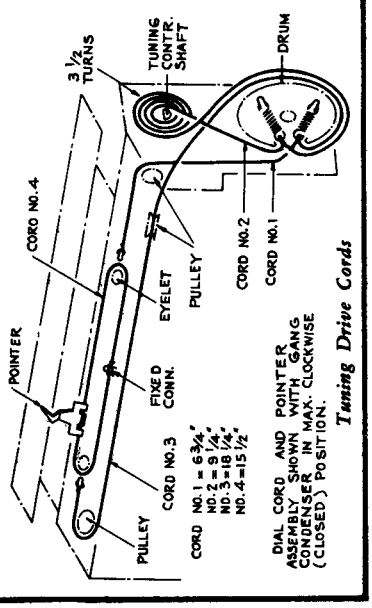


*Tuning Drive Cords*

# RCA VICTOR

Battery Charger **MODEL BC-3** Battery Charger/Speaker **MODEL BCS-4**

## MODEL 1-BT-2 SERIES

Chassis No. RC-1187

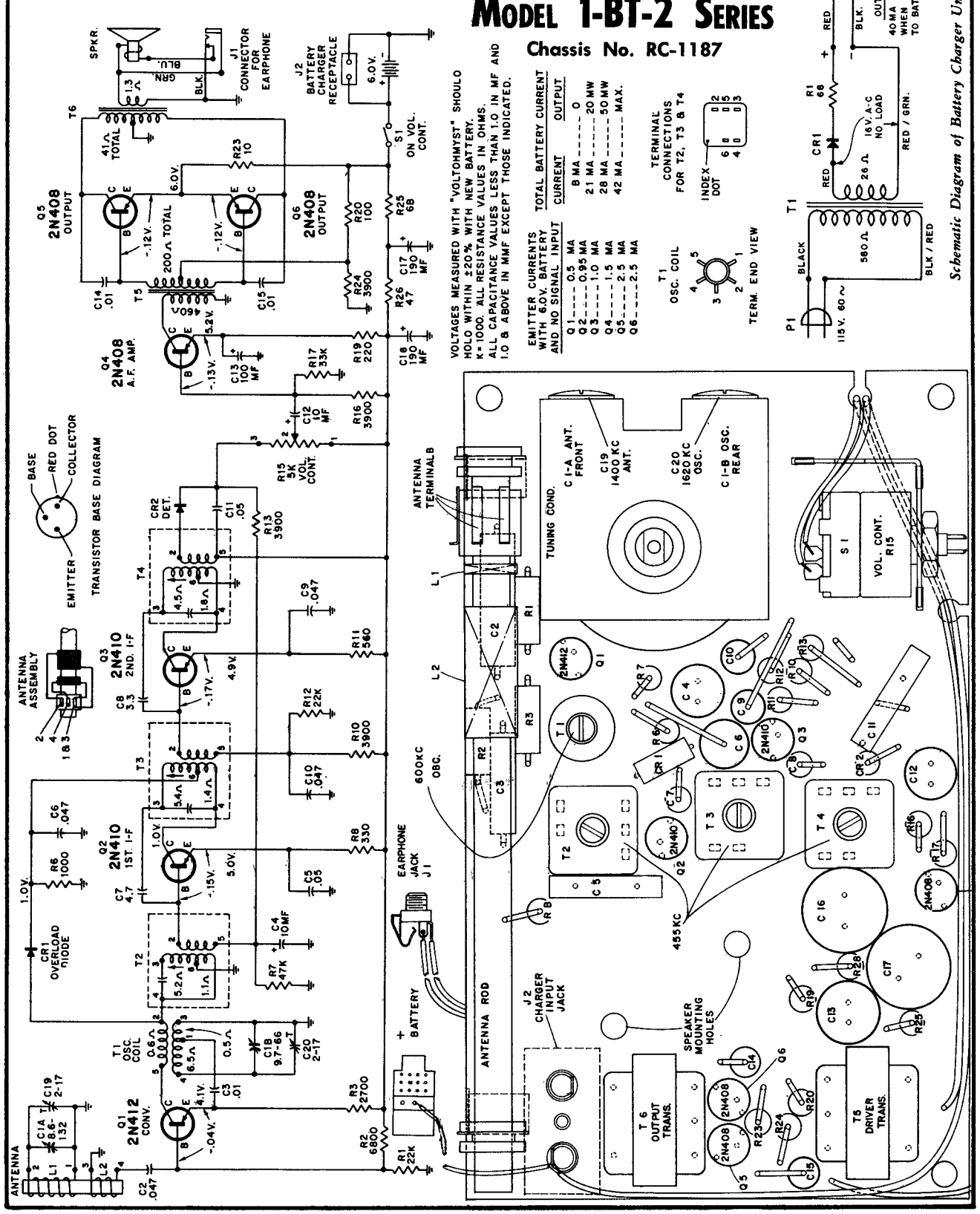

## RCA Victor Model 1-BT-3, Chassis RC-1187A

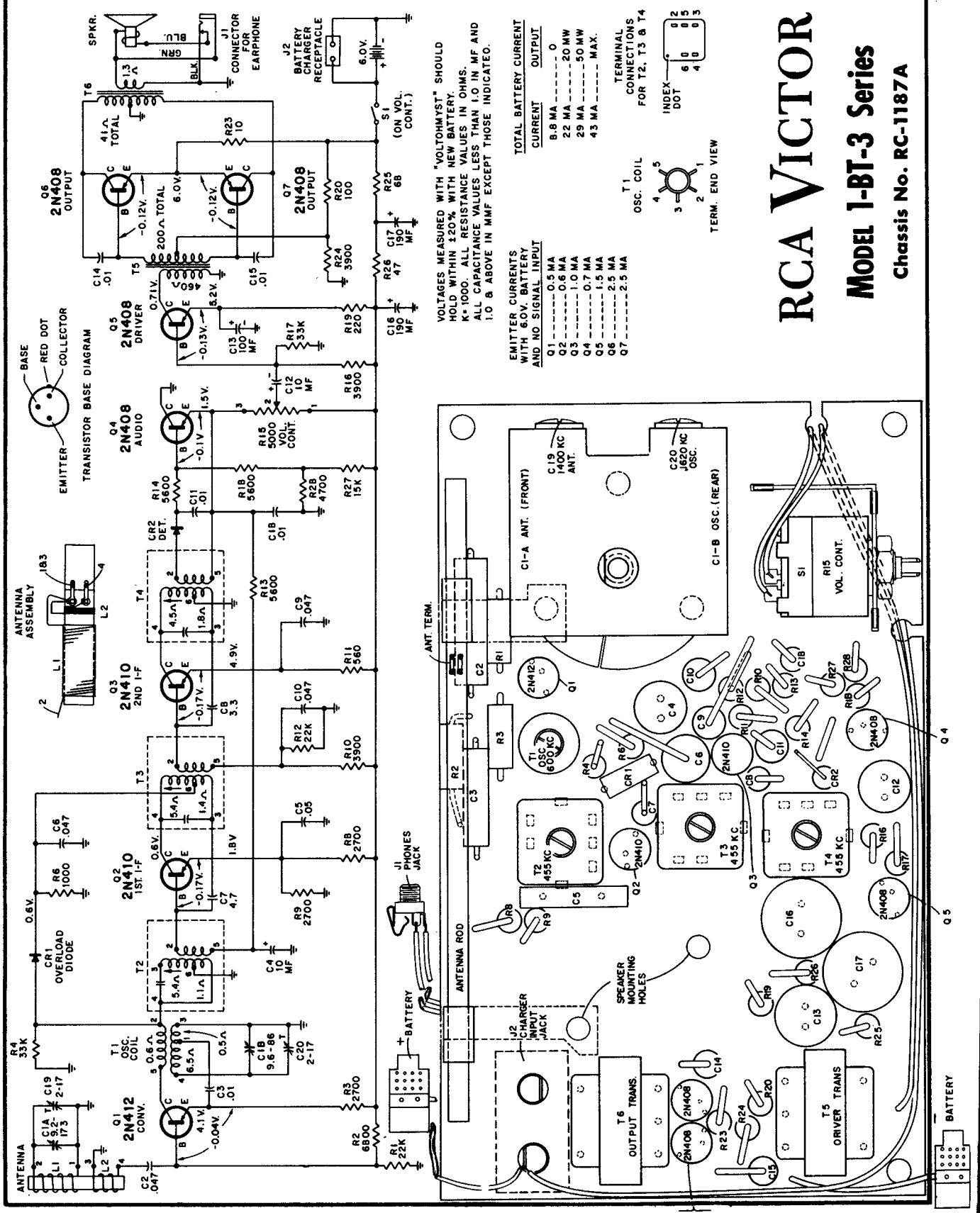

# RCA VICTOR

**AC-DC Radio Receiver**

## X-1, X-2 SERIES

**Chassis No. RC-1188**

C-1 Series, Chassis RC-1188A, is almost identical except for clock timer with its switch circuit.

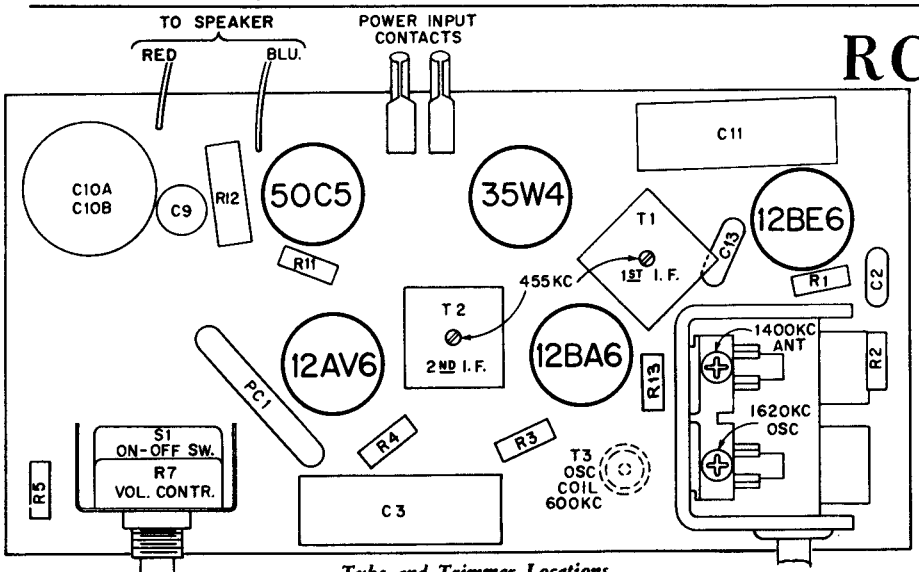


*Tube and Trimmer Locations*

**CHASSIS REMOVAL**

1. Remove three cabinet holding screws; two at back of top lip and one at bottom front.
2. Grip cabinet with two hands allowing fingers to extend over edges of cabinet front.
3. Hold cabinet, front down, and shake in a vertical direction. Cabinet assembly will separate and the fingers will limit the separation.
4. The cabinet front and chassis assembly may now be separated completely.

**CABINET REASSEMBLY**

1. Place chassis front and chassis assembly on the cabinet back so that the ribs of the cabinet front rest on the bottom — inside of the cabinet back.
2. Push cabinet sections together firmly.
3. Insert three holding screws; two at back of top lip and one at bottom front.

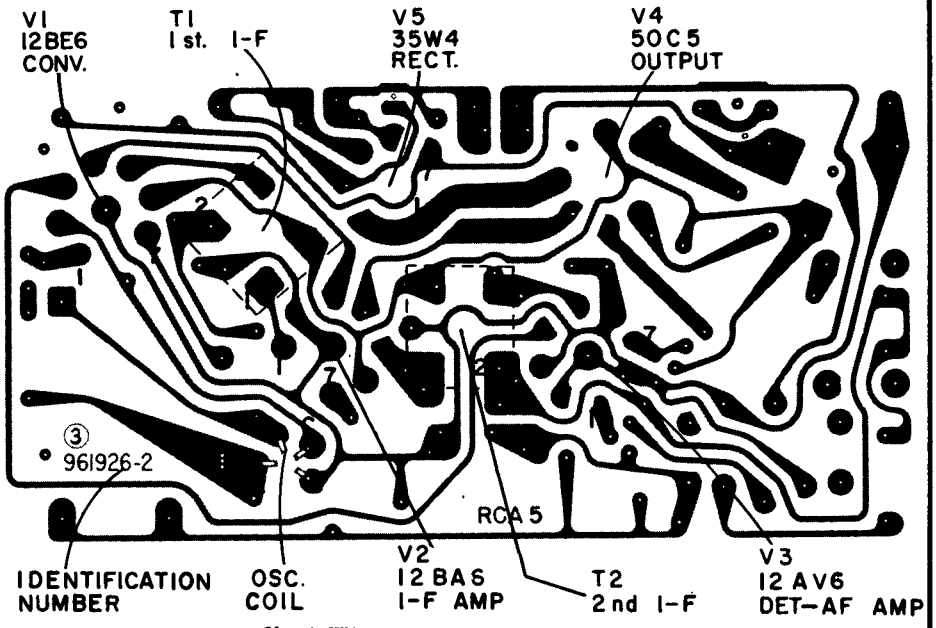


*Chassis Wiring and Components — View from Wiring Side*

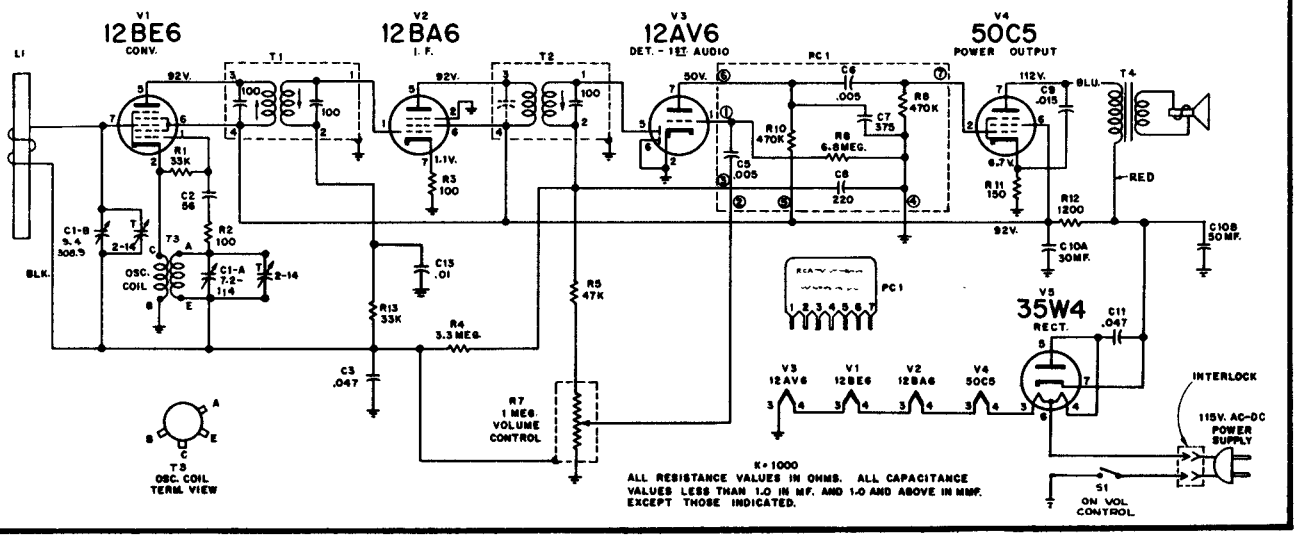

# Roland

## MODEL 71-483

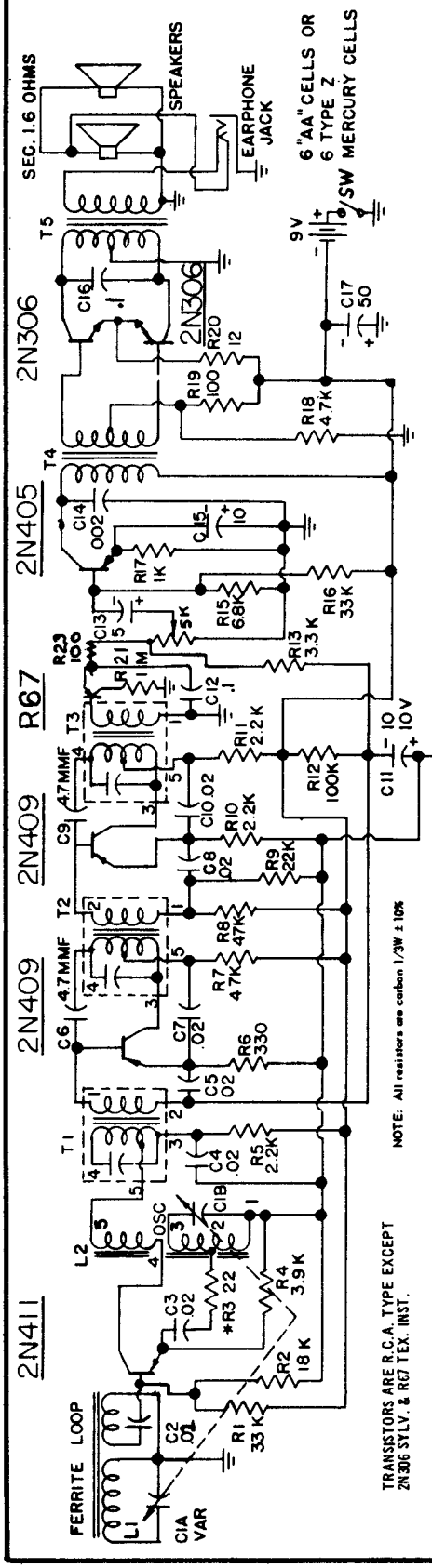


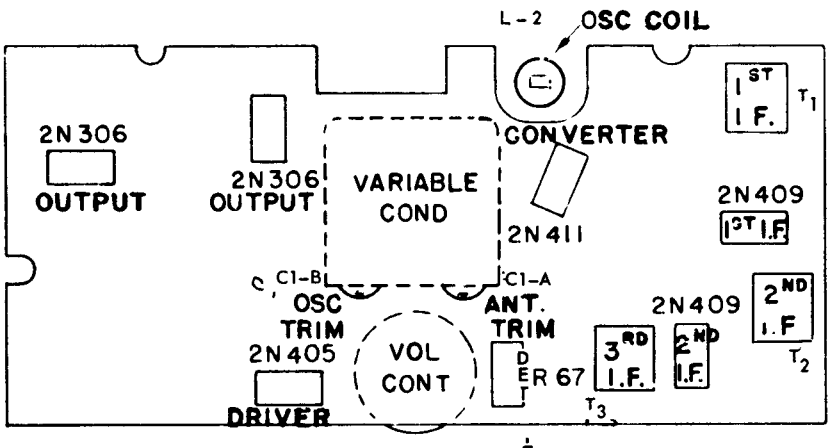


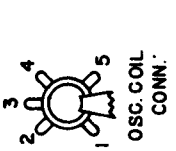


* INSTALLED IN SOME SETS AT FACTORY

## TO REMOVE CHASSIS

1. Remove volume control knob by pulling away from case.
2. Move handle to rear.
3. Release spring clips on each side of cabinet and remove back.
4. Remove battery holder.
5. Unscrew the four chassis corner mounting screws
6. Remove one screw holding volume control bracket.
7. Slide down to bottom of case and out to clear tuning knob from case.

## ALIGNMENT

| Function | Generator Frequency | Dummy Antenna | Generator Conn. | Adjust for Max. Output | Remarks |
|---|---|---|---|---|---|
| 1. I.F. | 455KC | .1 Mfd Condenser in series with Gen. Lead | On Converter Base | T1, T2, T3 | |
| 2. Osc. Trimmer | 1620KC | | *Test Loop | C1-B | Variable Condenser Set for Minimum capacity |
| 3. Osc. Slug | 540KC | | *Test Loop | L-2 Slug | Variable Condenser Set For Maximum Capacity |
| 4. Ant. Trimmer | 1400KC | | *Test Loop | C1-A | Tune 1400 Kc on Variable Condenser |

*Standard Hazeltine Loop Model 1150 or 3 turns of wire about 6" diameter placed one foot from set.

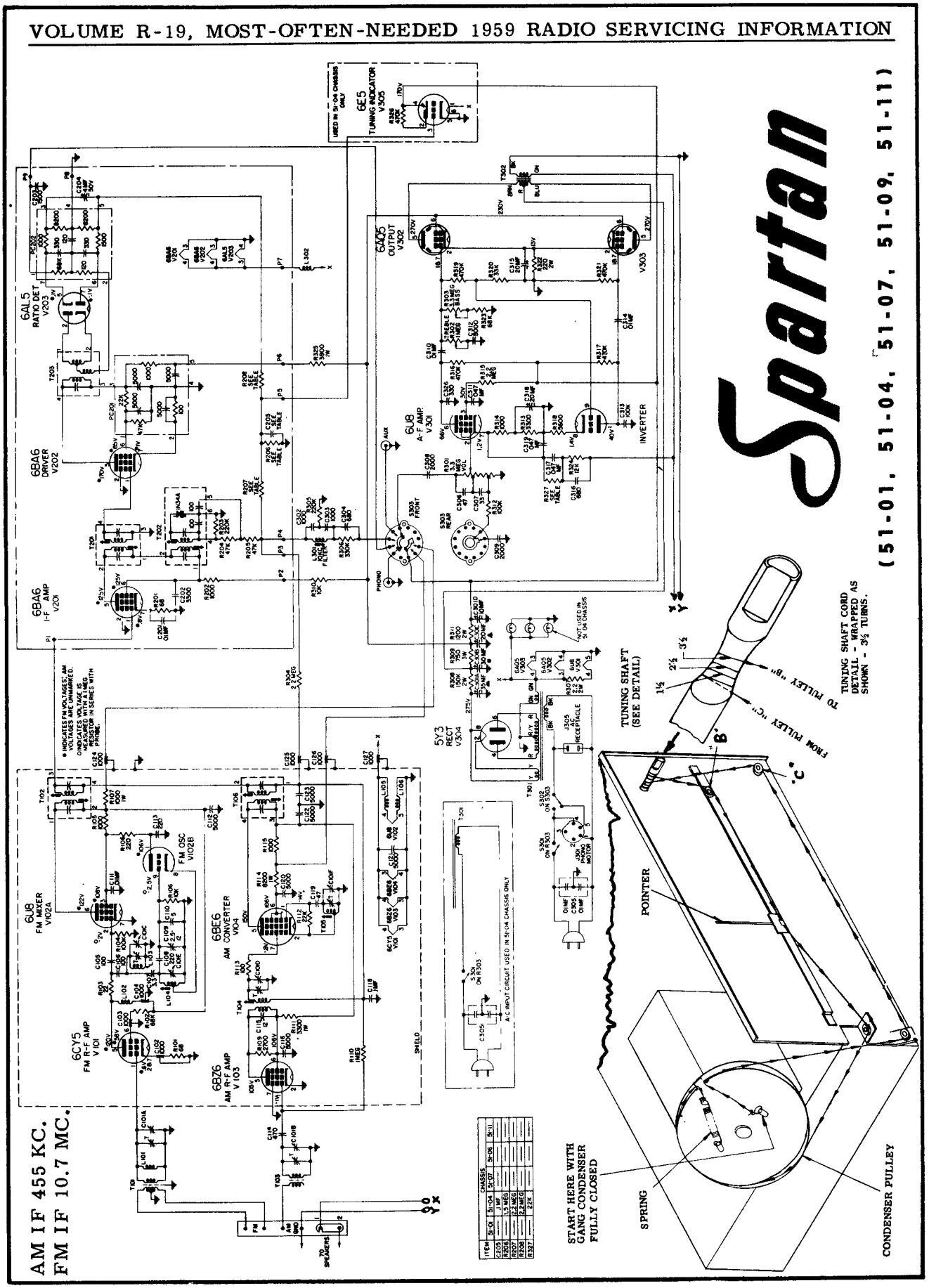
Spartan
(51-01, 51-04, 51-07, 51-09, 51-11)
AM IF 455 KC.
FM IF 10.7 MC.
6AL5 RATIO DET V203
6BA6 DRIVER V202
6BA6 I-F AMP V201
6U8 FM MIXER V102A
FM OSC V102B
6CY5 FM R-F AMP V101
6BE6 AM CONVERTER V104
6BZ6 AM R-F AMP V103
6AQ5 OUTPUT V302
6U8 A-F AMP V301
6E5 TUNING INDICATOR V305
5Y3 RECT V304
INVERTER
TUNING SHAFT (SEE DETAIL)
TO PULLEY "B"
FROM PULLEY "C"
TUNING SHAFT CORD DETAIL - WRAPPED AS SHOWN - 3½ TURNS.
POINTER
START HERE WITH GANG CONDENSER FULLY CLOSED
SPRING
CONDENSER PULLEY

SYLVANIA ELECTRIC PRODUCTS

## CHASSIS 1-609-7
## MODELS: SC03 SERIES

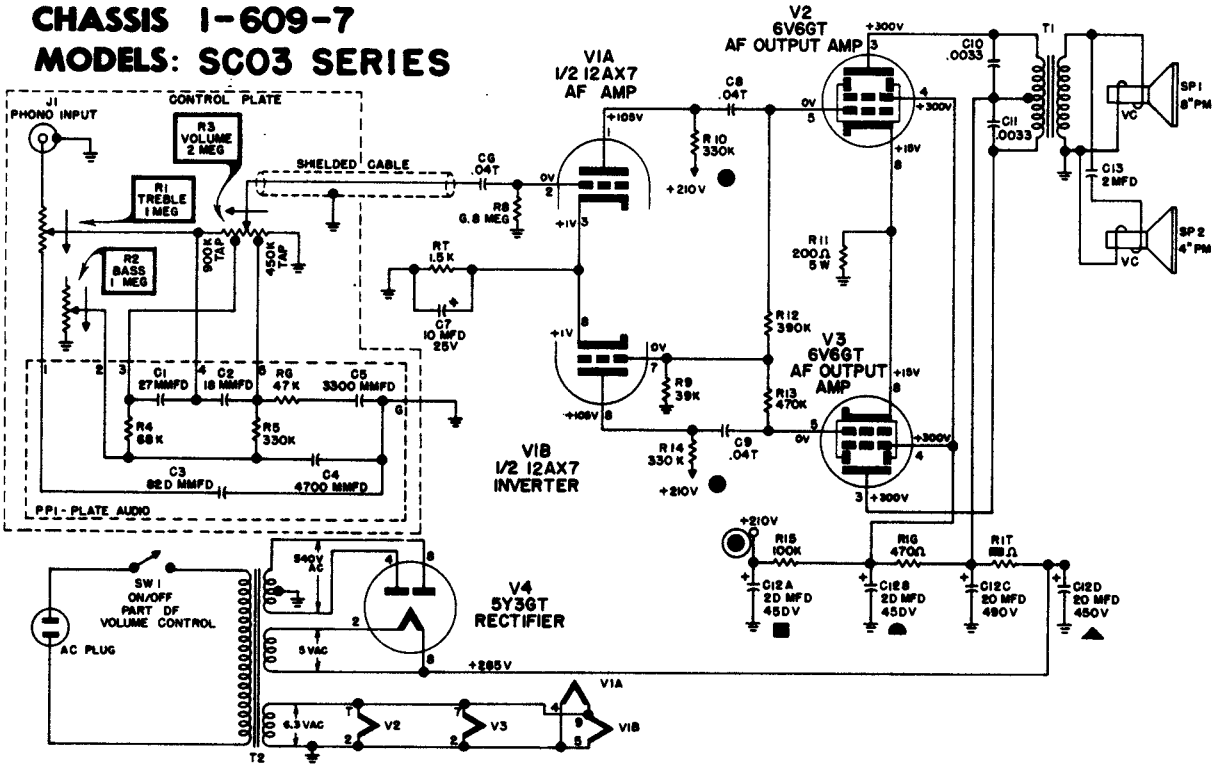


## CHASSIS: 1-639-1
## MODELS: 4312 SERIES

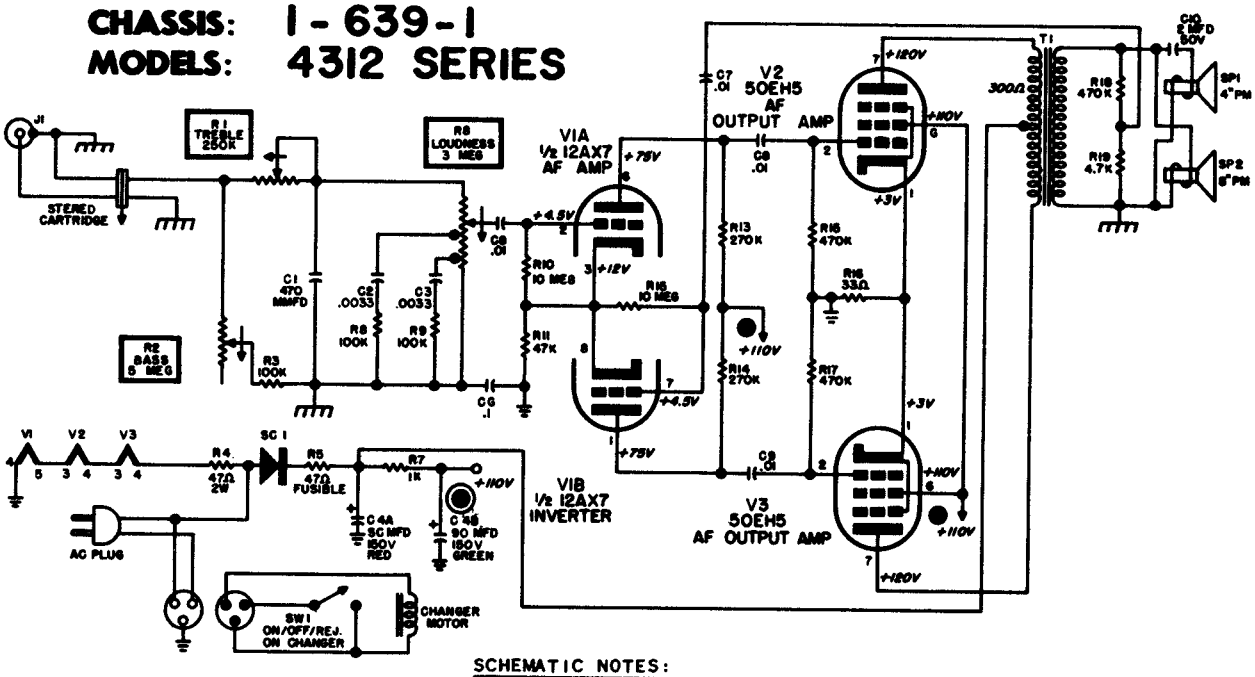


SCHEMATIC NOTES:

1. VOLTAGES SHOWN ARE AVERAGE READINGS MEASURED TO NEGATIVE "B" WITH NO SIGNAL INPUT. VARIATIONS MAY BE NOTED DUE TO NORMAL PRODUCTION TOLERANCES.
2. AC POWER SOURCE - 117V 60~ "VARIAC REGULATED".
3. VOLTAGE SOURCE IS INDICATED BY ENCIRCLED SYMBOL◉: CORRESPONDING SYMBOL WITHOUT CIRCLE ⊙ INDICATES VOLTAGE TIE POINTS.
4. ⏚ DESIGNATES CHASSIS GROUND.
5. ⏚ DESIGNATES NEGATIVE "B".

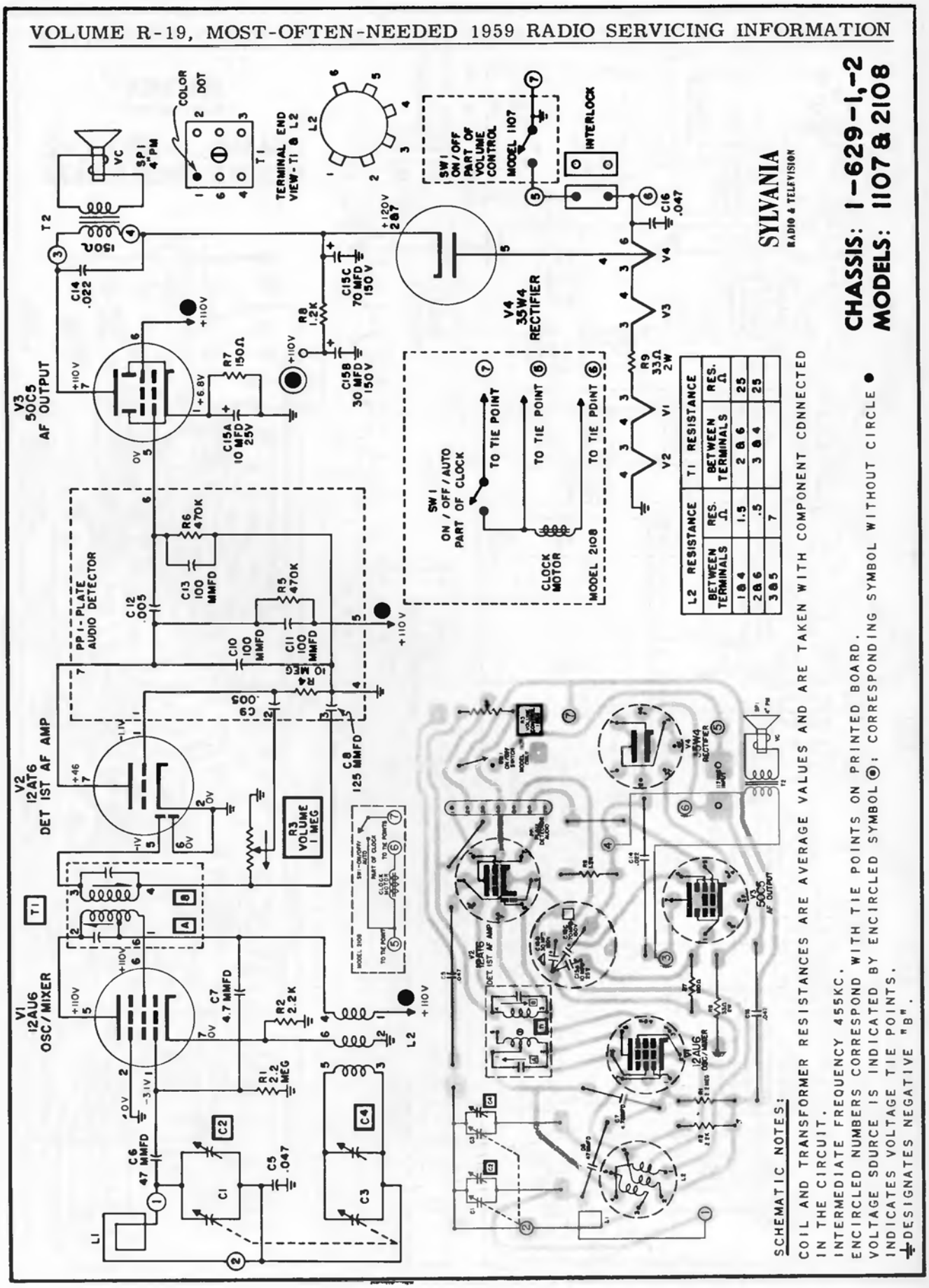


**CHASSIS: 1-629-1,-2**
**MODELS: 1107 & 2108**

| L2 RESISTANCE | | T1 RESISTANCE | |
|---|---|---|---|
| BETWEEN TERMINALS | RES. Ω | BETWEEN TERMINALS | RES. Ω |
| 1 & 4 | 1.5 | 2 & 6 | 25 |
| 2 & 6 | .5 | 3 & 4 | 25 |
| 3 & 5 | 7 | | |

SCHEMATIC NOTES:

COIL AND TRANSFORMER RESISTANCES ARE AVERAGE VALUES AND ARE TAKEN WITH COMPONENT CONNECTED IN THE CIRCUIT.
INTERMEDIATE FREQUENCY 455KC.
ENCIRCLED NUMBERS CORRESPOND WITH TIE POINTS ON PRINTED BOARD.
VOLTAGE SOURCE IS INDICATED BY ENCIRCLED SYMBOL ⊙; CORRESPONDING SYMBOL WITHOUT CIRCLE ● INDICATES VOLTAGE TIE POINTS.
⏚ DESIGNATES NEGATIVE "B".

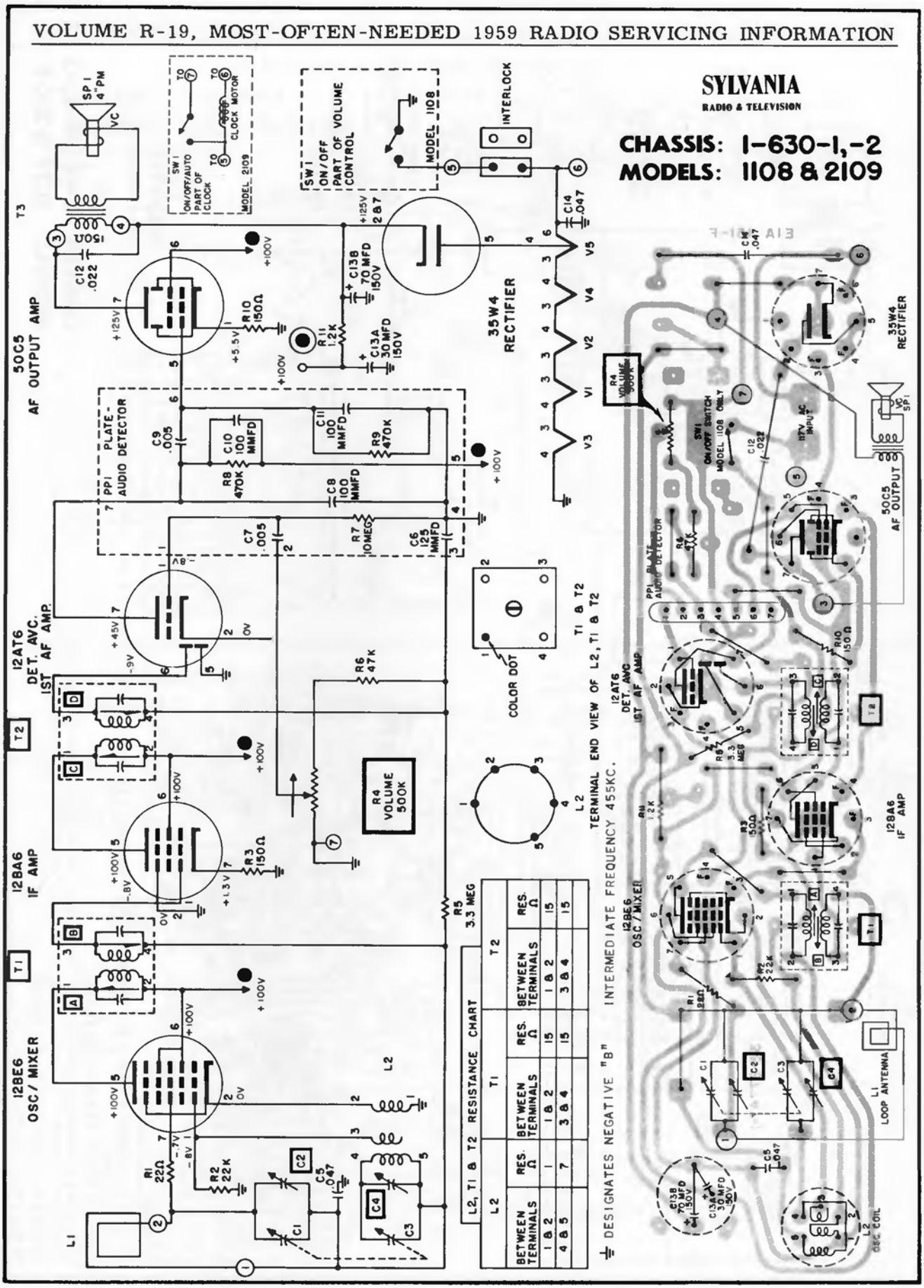


L2, T1 & T2 RESISTANCE CHART

| L2 | | T1 | | T2 | |
|---|---|---|---|---|---|
| BETWEEN TERMINALS | RES. Ω | BETWEEN TERMINALS | RES. Ω | BETWEEN TERMINALS | RES. Ω |
| 1 & 2 | 1 | 1 & 2 | 15 | 1 & 2 | 15 |
| 4 & 5 | 7 | 3 & 4 | 15 | 3 & 4 | 15 |

SYLVANIA Electric Products
Chassis 1-631-1, Model 1303

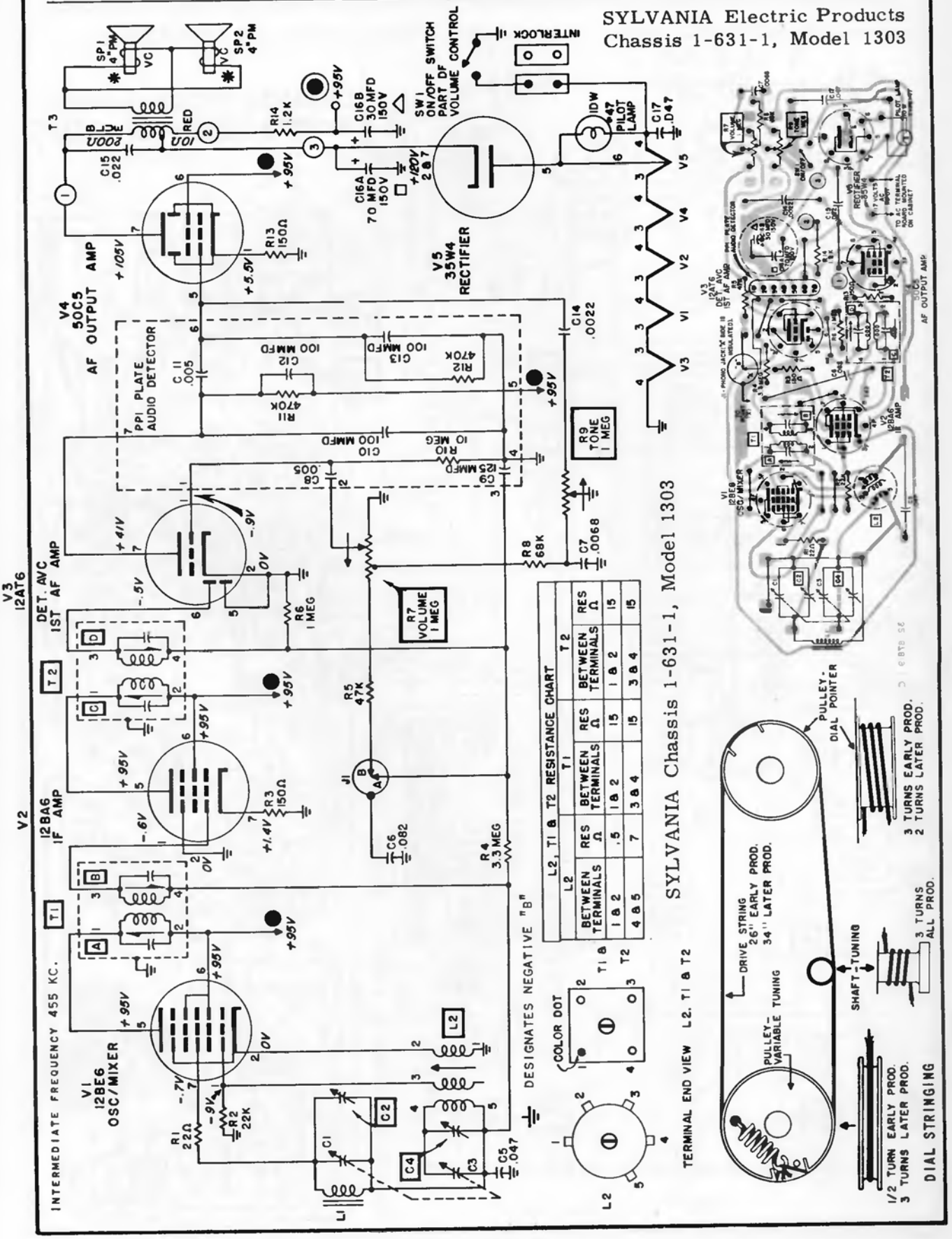

SYLVANIA

**CHASSIS:** 1-632-1,-2
**MODELS:** 1304 & 2305

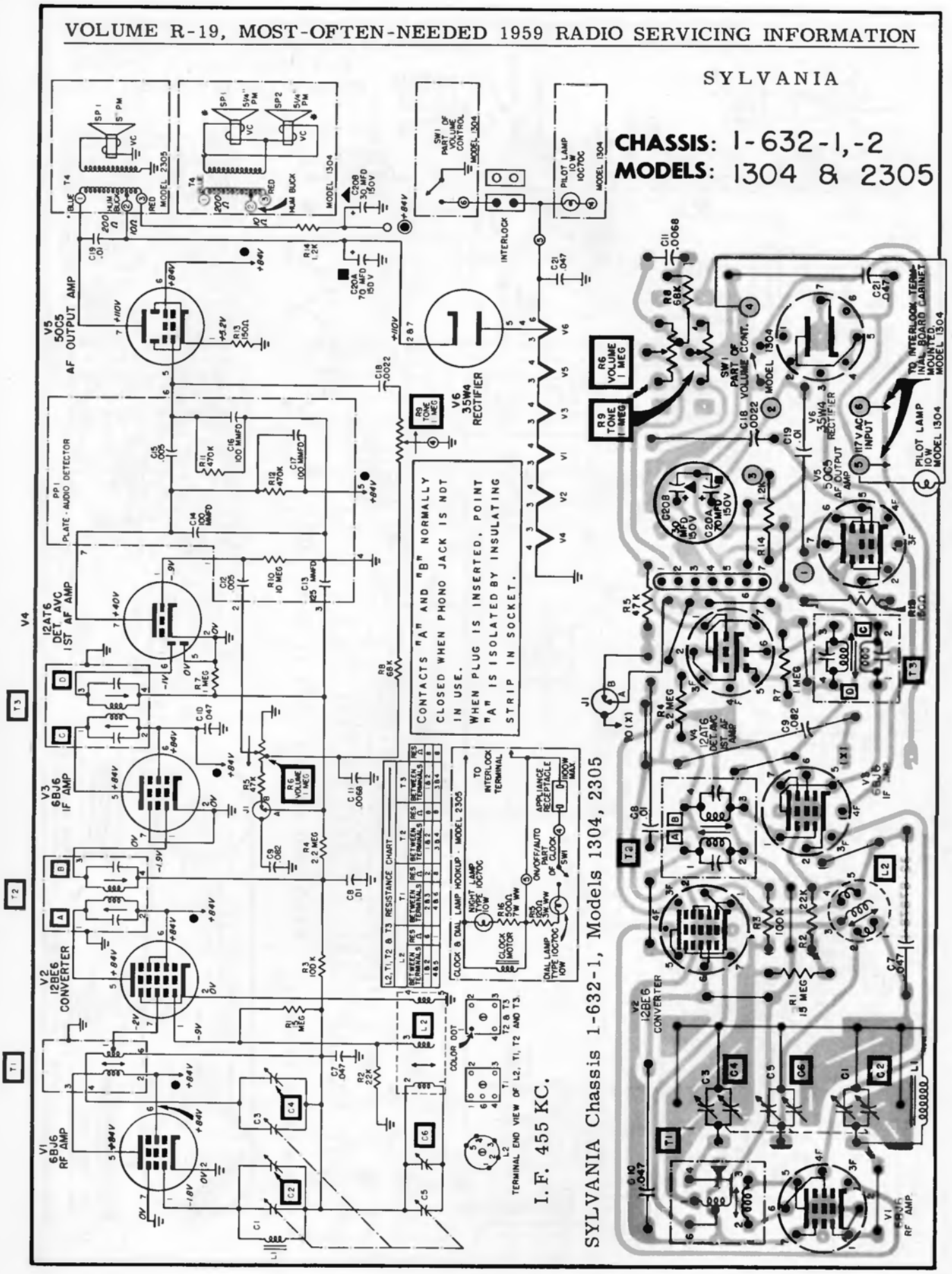

## SYLVANIA ELECTRIC PRODUCTS Chassis 1-640-1, Model 4416

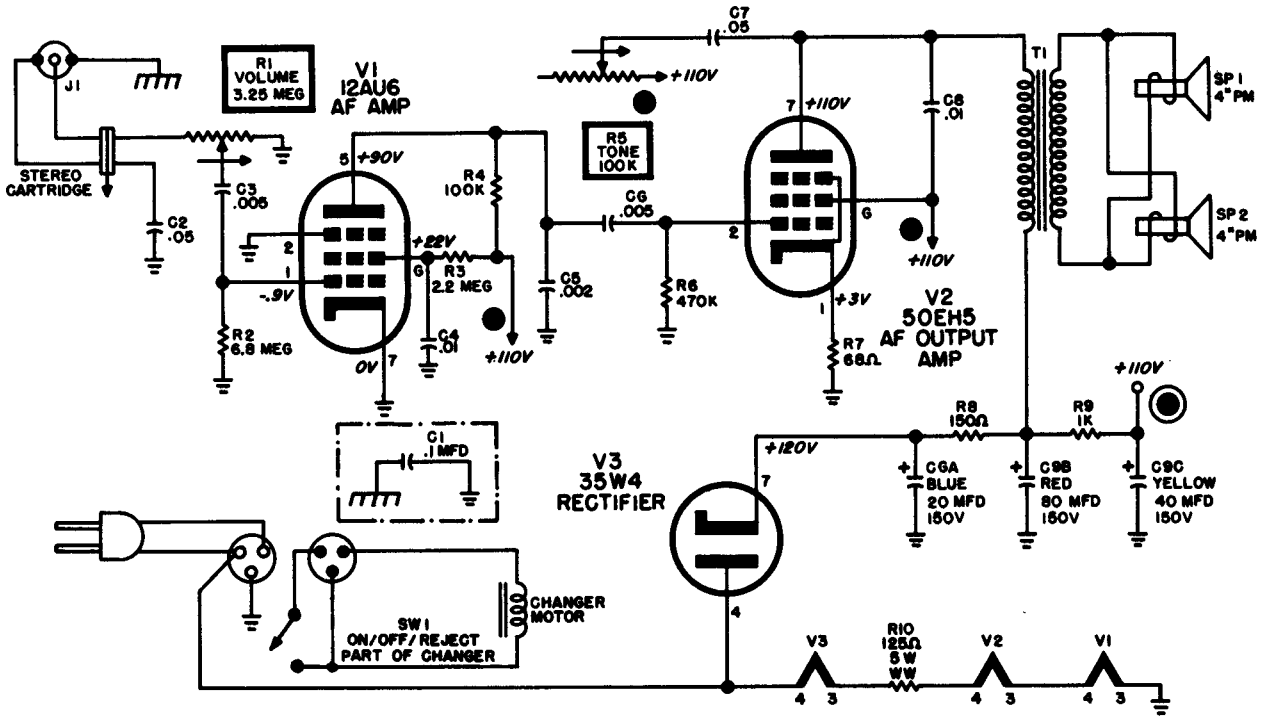


## SYLVANIA Chassis 1-642-1, Model 4419

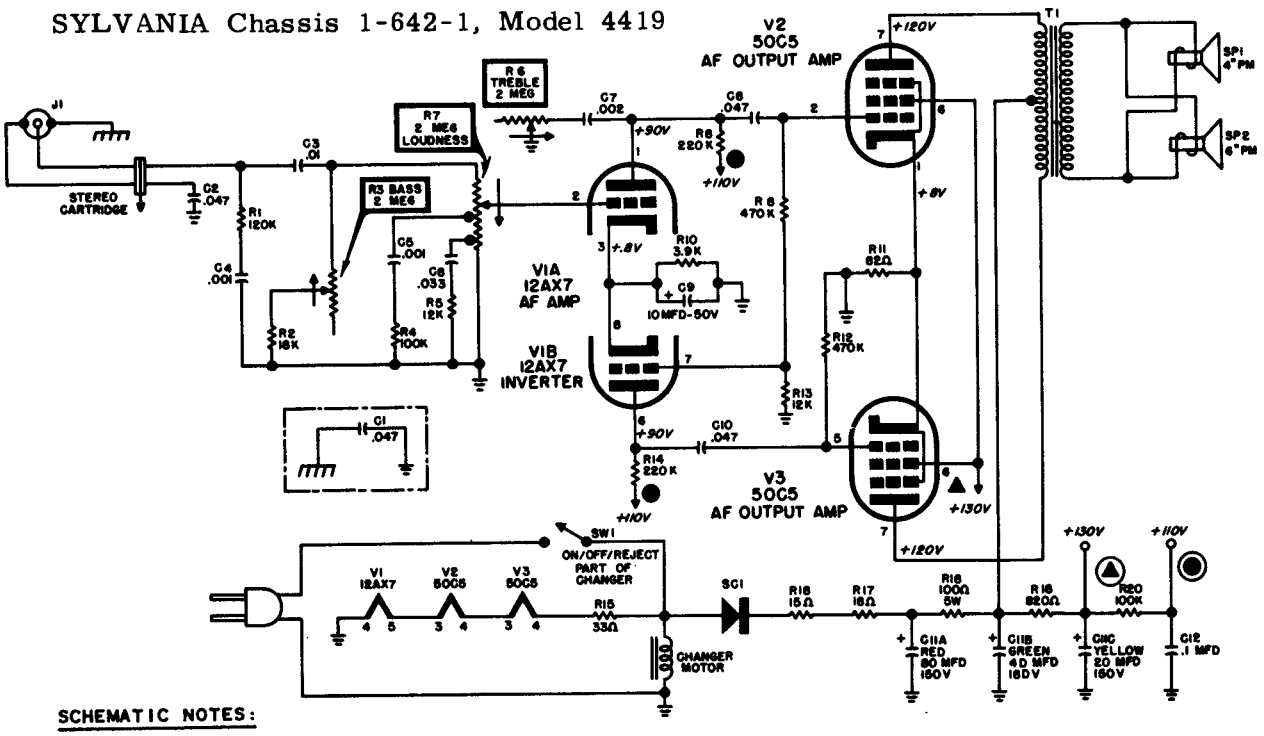


**SCHEMATIC NOTES:**

1. VOLTAGES SHOWN ARE AVERAGE READINGS MEASURED TO NEGATIVE "B" WITH NO SIGNAL INPUT. VARIATIONS MAY BE NOTED DUE TO NORMAL PRODUCTION TOLERANCES.
2. AC POWER SOURCE - 117V 60~ "VARIAC REGULATED".
3. VOLTAGE SOURCES ARE INDICATED BY ENCIRCLED SYMBOLS ◉ ▲: CORRESPONDING SYMBOLS WITHOUT CIRCLES ● ▲ INDICATE VOLTAGE TIE POINTS.
4. ⏚ DESIGNATES CHASSIS GROUND.
5. ⏚ DESIGNATES NEGATIVE "B".

## SYLVANIA ELECTRIC PRODUCTS Chassis 1-645-1, Models 4413, 4422

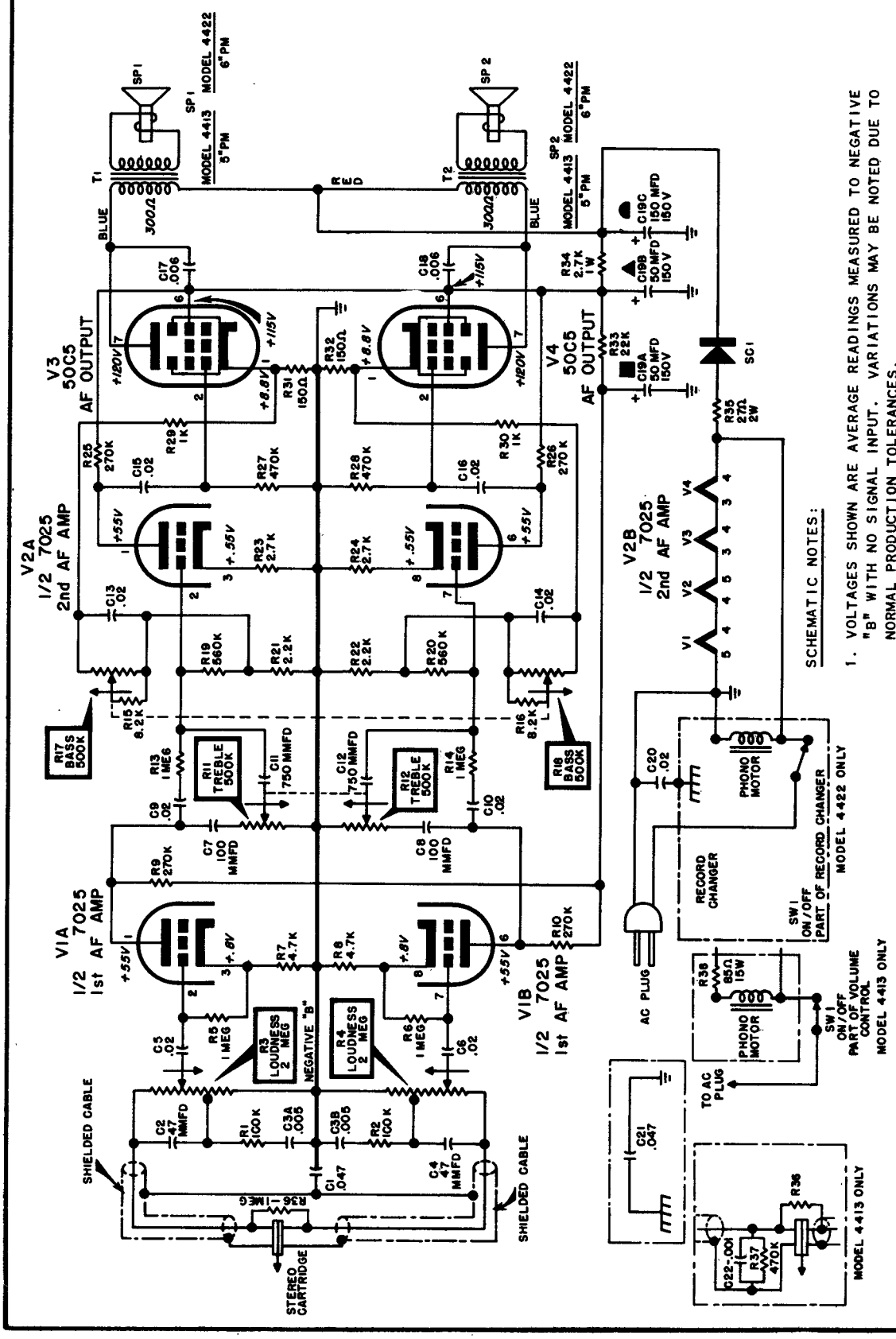

# TRAVLER MODEL 48-314

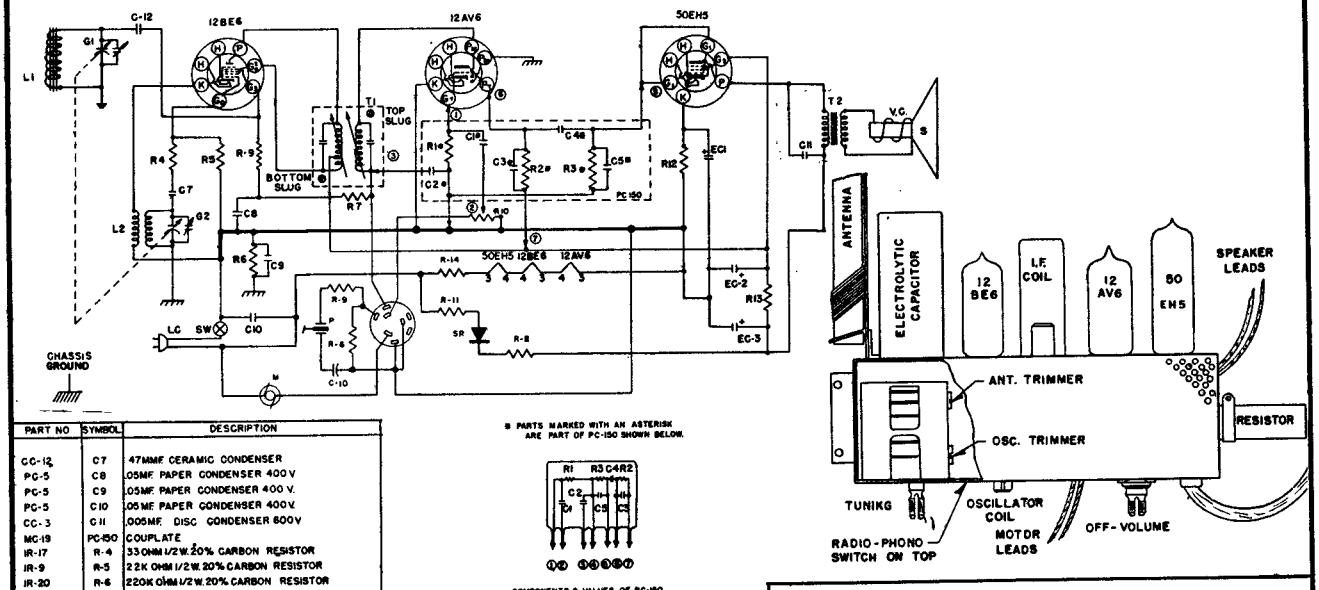


| PART NO | SYMBOL | DESCRIPTION |
|---|---|---|
| CC-12 | C7 | 47MMF CERAMIC CONDENSER |
| PC-5 | C8 | .05MF PAPER CONDENSER 400 V |
| PC-5 | C9 | .05MF PAPER CONDENSER 400 V. |
| PC-5 | C10 | .05MF PAPER CONDENSER 400 V. |
| CC-3 | C11 | .005MF. DISC CONDENSER 600V |
| MC-19 | PC-150 | COUPLATE |
| IR-17 | R-4 | 33 OHM 1/2 W. 20% CARBON RESISTOR |
| IR-9 | R-5 | 22 K OHM 1/2 W. 20% CARBON RESISTOR |
| IR-20 | R-6 | 220K OHM 1/2 W. 20% CARBON RESISTOR |
| IR-23 | R-7 | 3.3 MEGOHM 1/2 W. 20% CARBON RESISTOR |
| IR-41 | R-8 | 47 OHM 1 W 10% CARBON RESISTOR |
| IR-12 | R-9 | 1 MEGOHM 1/2 W 20% CARBON RESISTOR |
| CC-33 | C-12 | 220MMFD 500V 20% CERAMIC TUB COND. |
| VC-64 | R-10 | 1 MEGOHM VOLUME CONTROL |
| IR-17 | R-11 | 33 OHM 1/2 W. 20% CARBON RESISTOR |
| IR-14 | R-12 | 150 OHM 1/2 W. 20% CARBON RESISTOR |
| IR-25 | R-13 | 2200 OHM 1W 10% CARBON RESISTOR |
| EG-71A | EC-1 | 20MF-150WVDC — ELECTROLYTIC CONDENSER |
| | EC-2 | 30MF-150WVDC — ELECTROLYTIC CONDENSER |
| | EC-3 | 40MF-150WVDC — ELECTROLYTIC CONDENSER |
| CO-1 | LC | AC LINE CORD |
| GC-15 | G1 | ANT SECTION-WITH TRIMMER — GANG CONDENSER |
| | G2 | OSC SECTION-WITH TRIMMER — GANG CONDENSER |
| LL-55 | L1 | FERRAMIC ROD ANTENNA COIL |
| LO-28 | L2 | OSCILLATOR COIL |
| LI-12 | T1 | 455 KC TAPPED PRIMARY-I.F. COIL |
| | SW | SPST SWITCH (PART OF VOLUME CONTROL) |
| SPK-22-C | T2 | OUTPUT TRANSFORMER — PM SPEAKER |
| | VC | VOICE COIL WINDING — PM SPEAKER |
| | S | SPEAKER — PM SPEAKER |

* PARTS MARKED WITH AN ASTERISK ARE PART OF PC-150 SHOWN BELOW.




COMPONENTS & VALUES OF PC-150

C1=2000 MMF.
C2=220 MMF.
C3=
C5=
C4=5000 MMF.
R1=6.8 MEGOHM
R2=.47 MEGOHM
R3=.47 MEGOHM

| PART NO | SYMBOL | DESCRIPTION |
|---|---|---|
| 3-M-13 | M | 110 V. MOTOR-3 SPEED |
| PU-34 | P | PICKUP UP ARM BSR-TC-R-M CARTRIDGE |
| WR-47 | R-14 | 280 OHM-10 W. 5% WIREWOUND |
| SR-3 | SR | 85 MIL. RECTIFIER |

I.F. 455 KC.

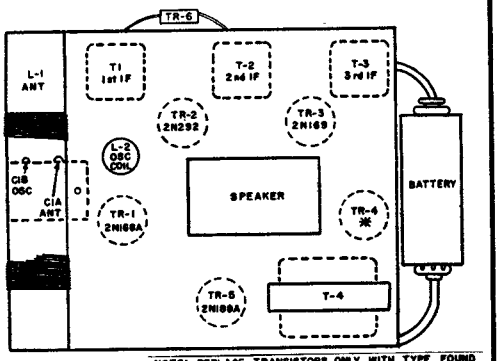


NOTE: REPLACE TRANSISTORS ONLY WITH TYPE FOUND IN RECEIVER
* TRANSISTOR PART NUMBER NO. SC-12 OR GEN. ELEC. 2N107

## MODELS-TR-280-A, 281-A, 282-A, 283-A

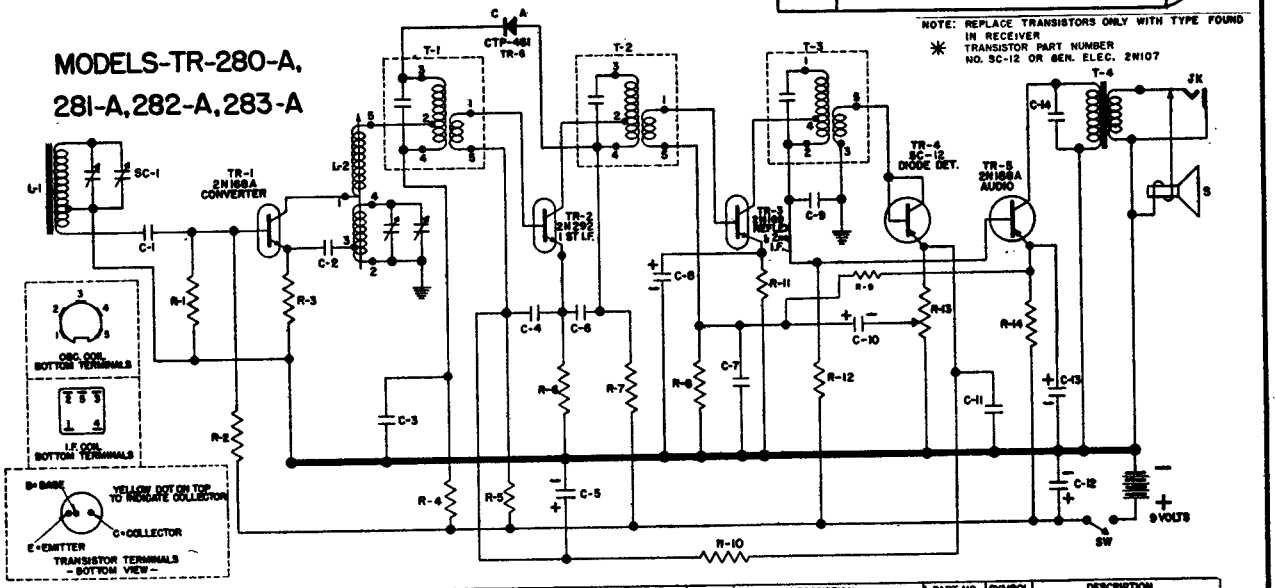


| PART NO. | SYMBOL | DESCRIPTION |
|---|---|---|
| CC-55 | C-1 | .02 MFD. CERAMIC DISC |
| CC-35 | C-2 | .01 MFD. " " |
| CC-64 | C-3 | .01 MFD. " " |
| CC-66 | C-4 | .05 " " " |
| EG-93 | C-5 | 10 " 12V D.C. ELECTROLYTIC COND. |
| CC-65 | C-6 | .02 " CERAMIC DISC |
| CC-64 | C-7 | .01 " " " |
| EC-84 | C-8 | 40 " 12V.D.C. ELECTROLYTIC COND. |
| CC-65 | C-9 | .02 " CERAMIC DISC |
| EC-85 | C-10 | 10 " 12V.D.C. ELECTROLYTIC COND. |
| CC-66 | C-11 | .05 " CERAMIC DISC |
| EG-94 | C-12 | 40 " 12V.D.C. ELECTROLYTIC COND. |
| EC-92 | C-13 | 100 MFD. 12V.D.C. ELECTROLYTIC COND. |
| CC-65 | C-14 | .02 MFD. CERAMIC DISC |

| PART NO. | SYMBOL | DESCRIPTION |
|---|---|---|
| IR-64 | R-1 | 10 K OHMS 1/2 W. 10% CARBON RESISTOR |
| IR-158 | R-2 | 33K " " " " " " |
| IR-29 | R-3 | 1500 " " " " " " |
| IR-199 | R-4 | 470 " " " " " " |
| IR-34 | R-5 | 82K " " " " " " |
| IR-189 | R-6 | 330 " " " " " " |
| IR-158 | R-7 | 4700 " " " " " " |
| IR-158 | R-8 | 4700 " " " " " " |
| IR-121 | R-9 | 39K " " " " " " |
| IR-108 | R-10 | 3300 " " " " " " |
| IR-199 | R-11 | 470 " " " " " " |
| IR-29 | R-12 | 1500 " " " " " " |
| VC-127 | R-13 | 10K OHMS VOLUME CONTROL WITH S.P.S.T. SW. |
| IR-104 | R-14 | 100 OHM 1/2 W. 10% CARBON RESISTOR |

| PART NO. | SYMBOL | DESCRIPTION |
|---|---|---|
| LI-22 | T-1 | 1st STAGE I.F. TRANSFORMER |
| LI-22 | T-2 | 2nd " " " |
| LI-23 | T-3 | 3rd " " " |
| AT-33 | T-4 | OUTPUT TRANSFORMER |
| SC-9 | TR-1 | 2N168A CONVERTER TRANSISTOR |
| SC-9 | TR-2 | 2N 292 1st I.F. " |
| SC-10 | TR-3 | 2N 169 2nd I.F. & REFLEX |
| SC-12 | TR-4 | SC-12 OR 2N107 DIODE |
| SC-11 | TR-5 | 2N168A AUDIO OUTPUT TRANSISTOR |
| SC-7 | TR-6 | CTP-461 GLASS-GERMANIUM DIODE |
| | SW | SWITCH ON VOLUME CONTROL |
| SPK-52 | S | PM SPEAKER |
| LL-46 | L-1 | ANT ASSEMBLY |
| SO-28-A | L-2 | OSCILLATOR COIL |
| SC-22 | SC-1 | GANG CONDENSER 2 SECTION 2 GEC. |

| PART NO. | SYMBOL | DESCRIPTION |
|---|---|---|
| J-1 | JK | EARPHONE JACK |

# TRAVLER MODEL 90-105

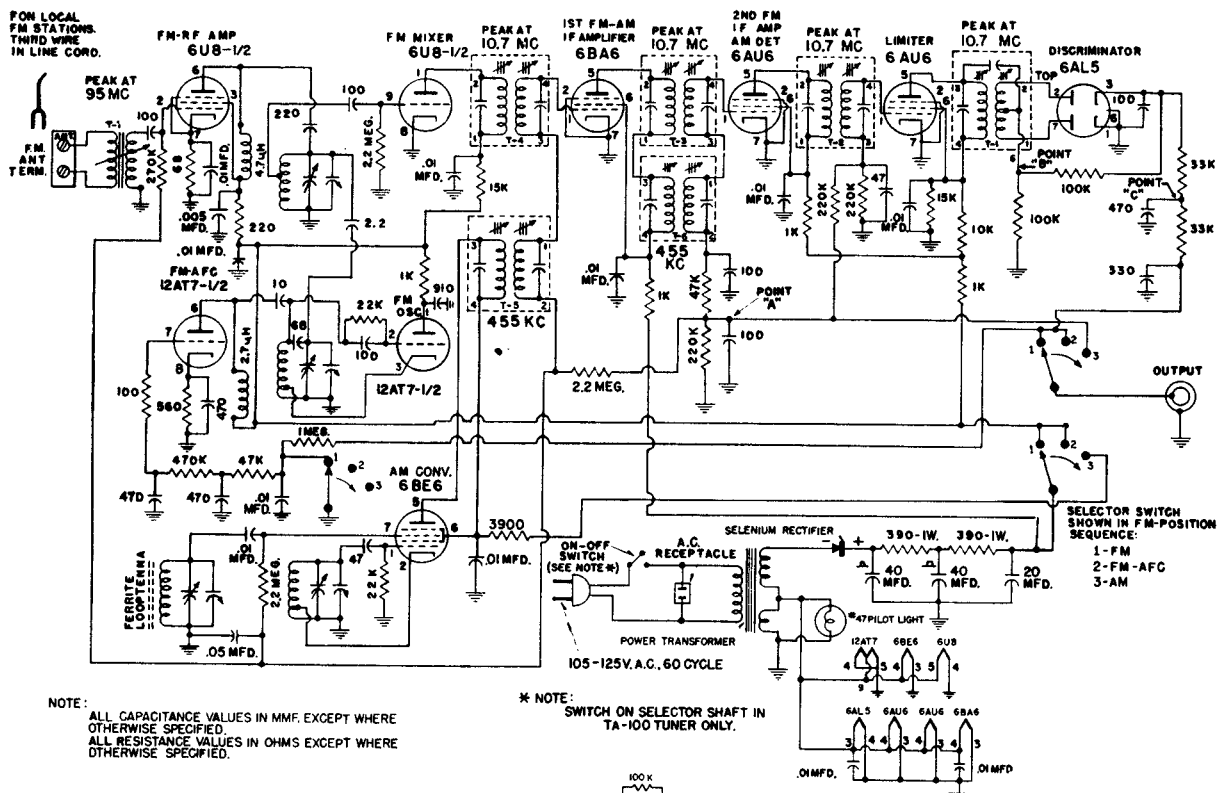


NOTE:
ALL CAPACITANCE VALUES IN MMF. EXCEPT WHERE OTHERWISE SPECIFIED.
ALL RESISTANCE VALUES IN OHMS EXCEPT WHERE OTHERWISE SPECIFIED.

* NOTE:
SWITCH ON SELECTOR SHAFT IN TA-100 TUNER ONLY.

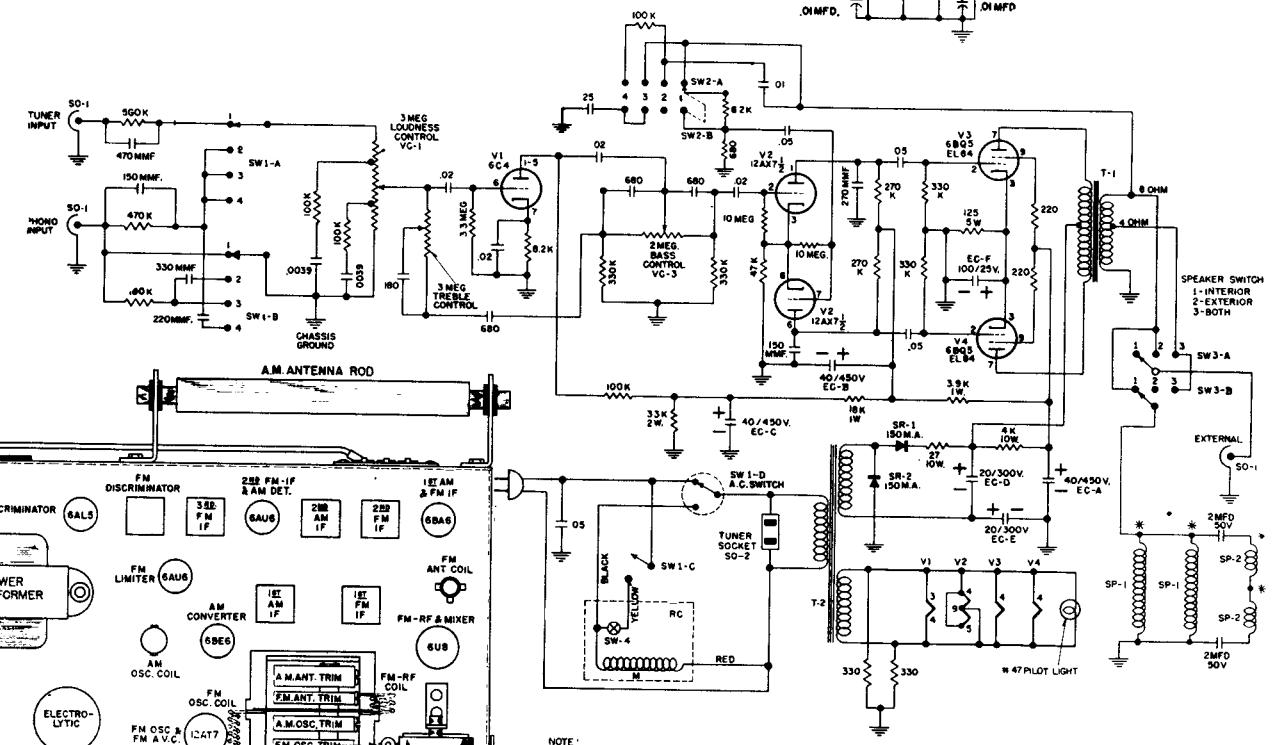


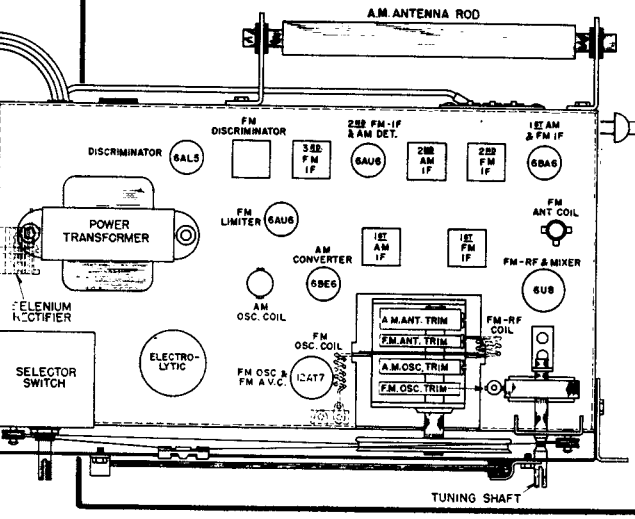


NOTE:
1. * INDICATES START OF VOICE COIL MARKED BY RED DOT. REVERSE PHASING OF SPEAKERS WILL CAUSE LOSS OF BASS.
2. REVERSE PHASING OF FEEDBACK WILL CAUSE AMPLIFIER TO OSCILLATE.
3. POLARIZE A.C. PLUG FOR MINIMUM HUM

- COMPENSATOR SWITCH -
1-TUNER
2-RIAA
3-FLAT
4-78
SW-1 SWITCHES SHOWN IN TUNER POSITION

## WEBCOR Models 1953, 1991, using AM Tuner 73X014-1, Amplifiers 14X278-1, -2

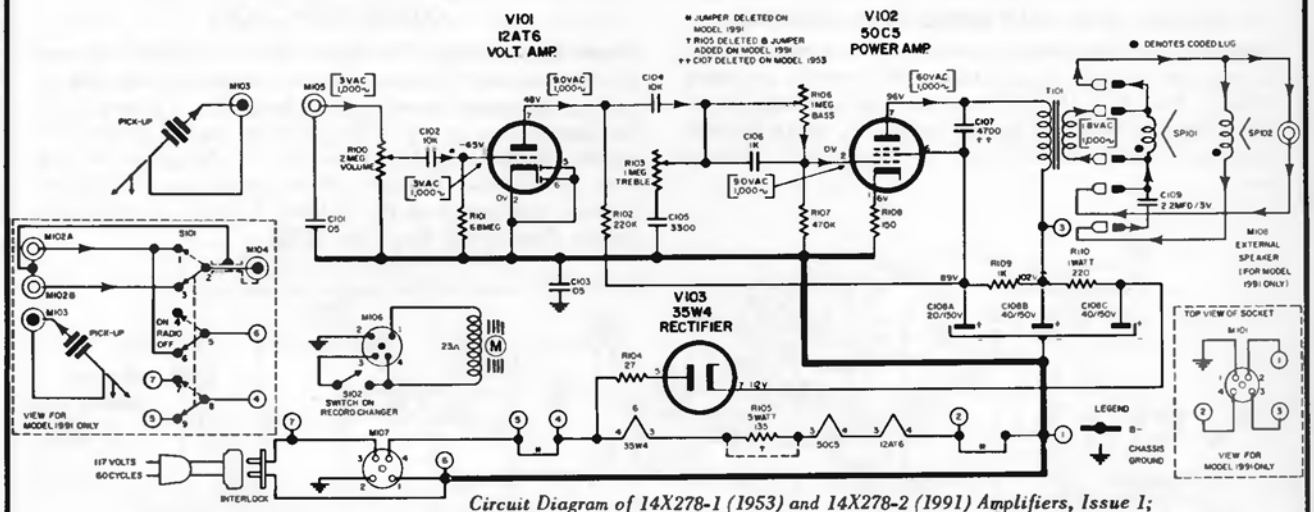


*Circuit Diagram of 14X278-1 (1953) and 14X278-2 (1991) Amplifiers, Issue 1; and 73X014-1 (1991) AM Tuner, Issue 1.*

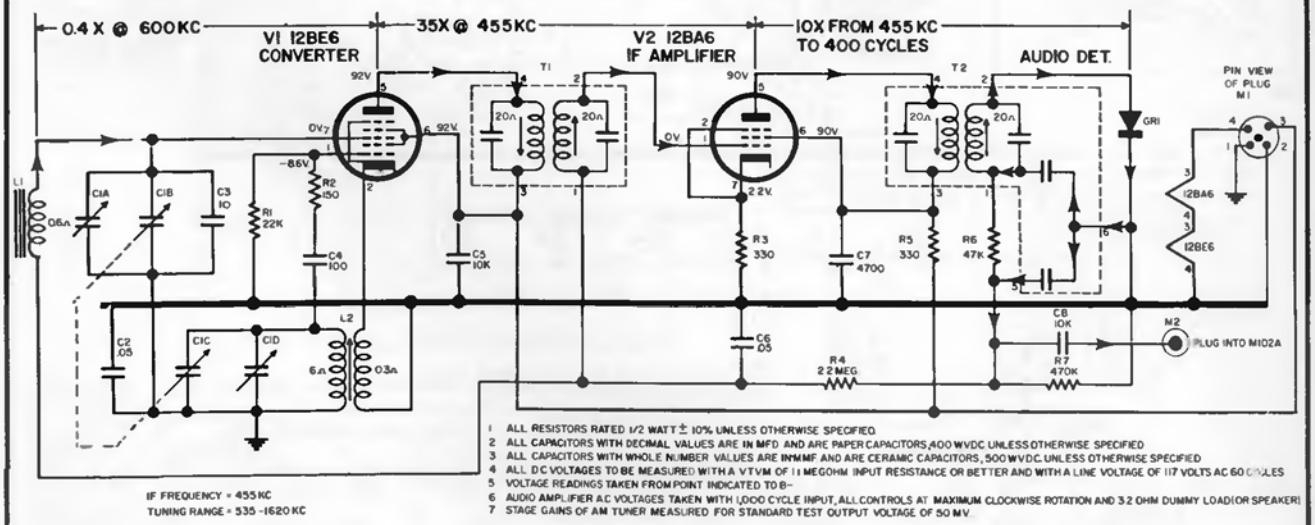


1 ALL RESISTORS RATED 1/2 WATT ± 10% UNLESS OTHERWISE SPECIFIED
2 ALL CAPACITORS WITH DECIMAL VALUES ARE IN MFD AND ARE PAPER CAPACITORS, 400 WVDC UNLESS OTHERWISE SPECIFIED
3 ALL CAPACITORS WITH WHOLE NUMBER VALUES ARE IN MMF AND ARE CERAMIC CAPACITORS, 500 WVDC UNLESS OTHERWISE SPECIFIED
4 ALL DC VOLTAGES TO BE MEASURED WITH A VTVM OF 11 MEGOHM INPUT RESISTANCE OR BETTER AND WITH A LINE VOLTAGE OF 117 VOLTS AC 60 CYCLES
5 VOLTAGE READINGS TAKEN FROM POINT INDICATED TO B-
6 AUDIO AMPLIFIER AC VOLTAGES TAKEN WITH 1,000 CYCLE INPUT, ALL CONTROLS AT MAXIMUM CLOCKWISE ROTATION AND 3.2 OHM DUMMY LOAD (OR SPEAKER)
7 STAGE GAINS OF AM TUNER MEASURED FOR STANDARD TEST OUTPUT VOLTAGE OF 50 MV

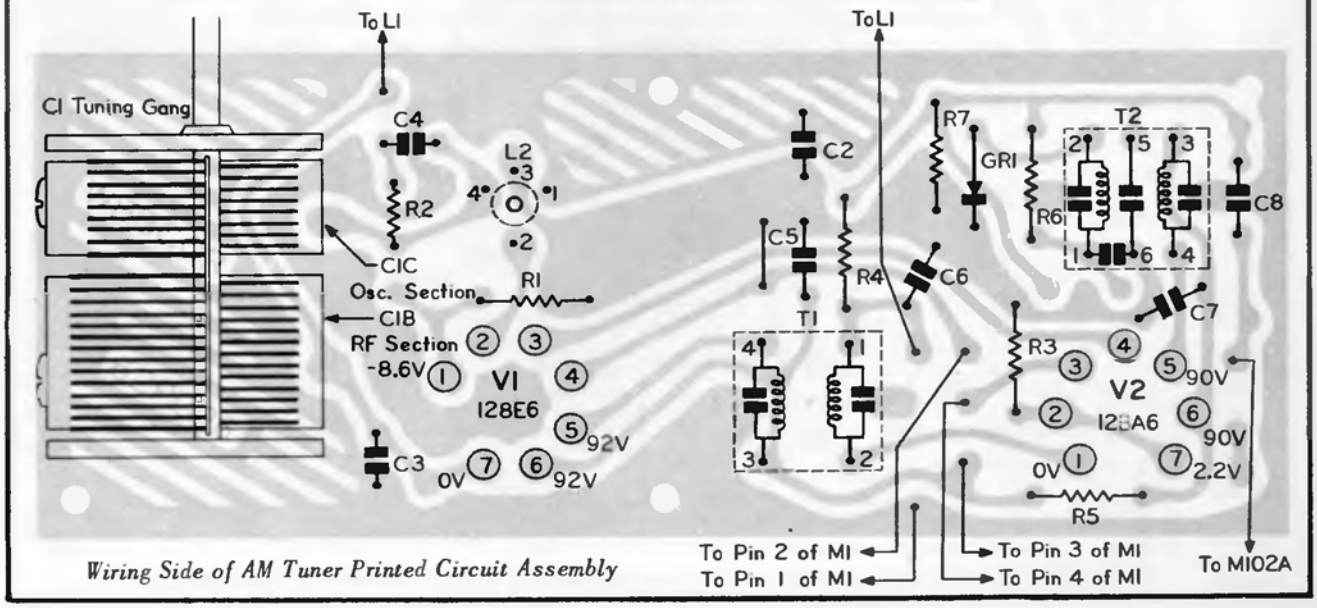


*Wiring Side of AM Tuner Printed Circuit Assembly*

## WEBCOR Model 1954-1, using Amplifier 14X280-1

### NEEDLE AND CARTRIDGE REPLACEMENT

If distortion or harshness of treble tones is encountered, it is probable that the cartridge and needle assembly (Webcor Part No. 21P586) requires replacement. To replace the cartridge and needle assembly, grasp the cartridge with thumb and forefinger and gently pull cartridge free.

### CONNECTION JACKS

**Stereo Output Jack:** The Stereo Output Jock on the rear of the Holiday Caronet Cabinet makes it possible to connect a second sound system (amplifier and speakers) for Stereofonic reproduction. Webcar Model 4905 Companion Stereofonic Saund System is designed for use with the Holiday Caronet. When using the 4905 Sound System, connection to the Holiday Coronet is made with Stereo Connecting Cord No. 2933.

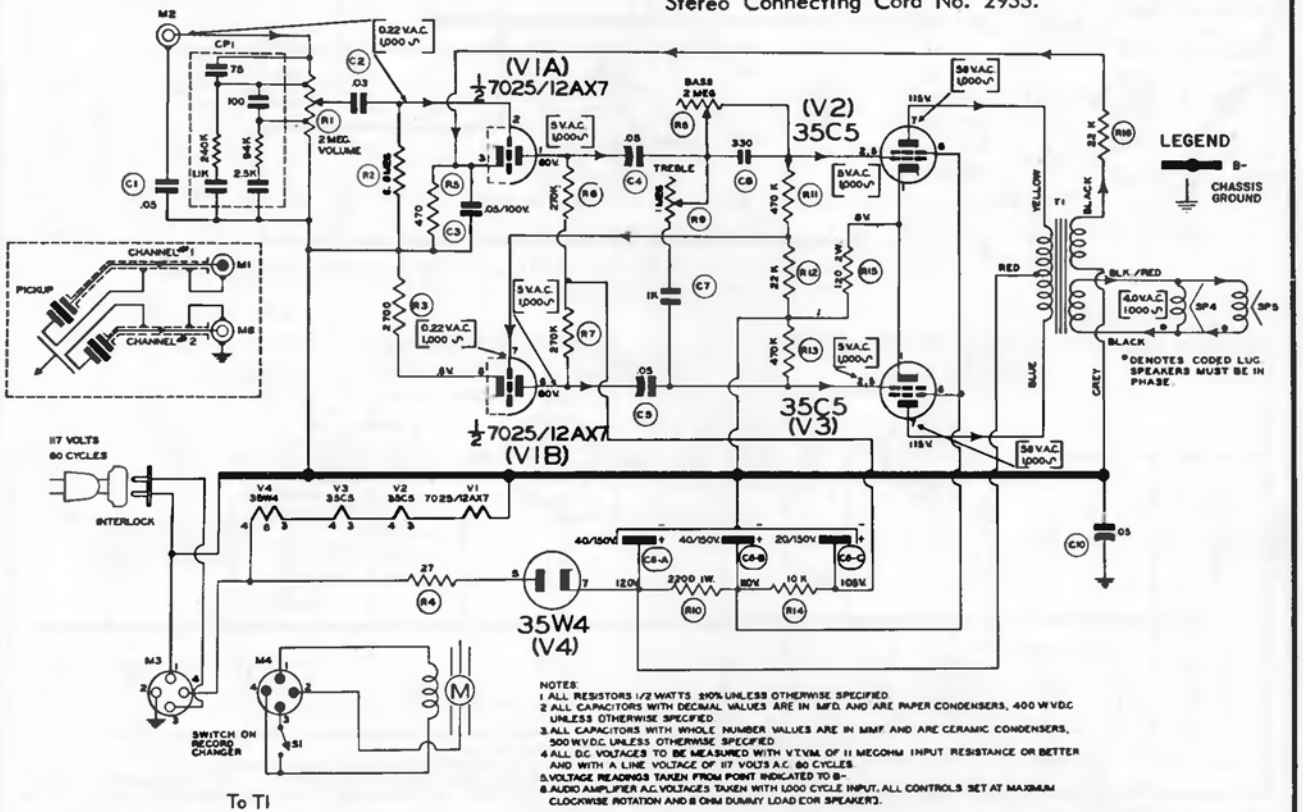


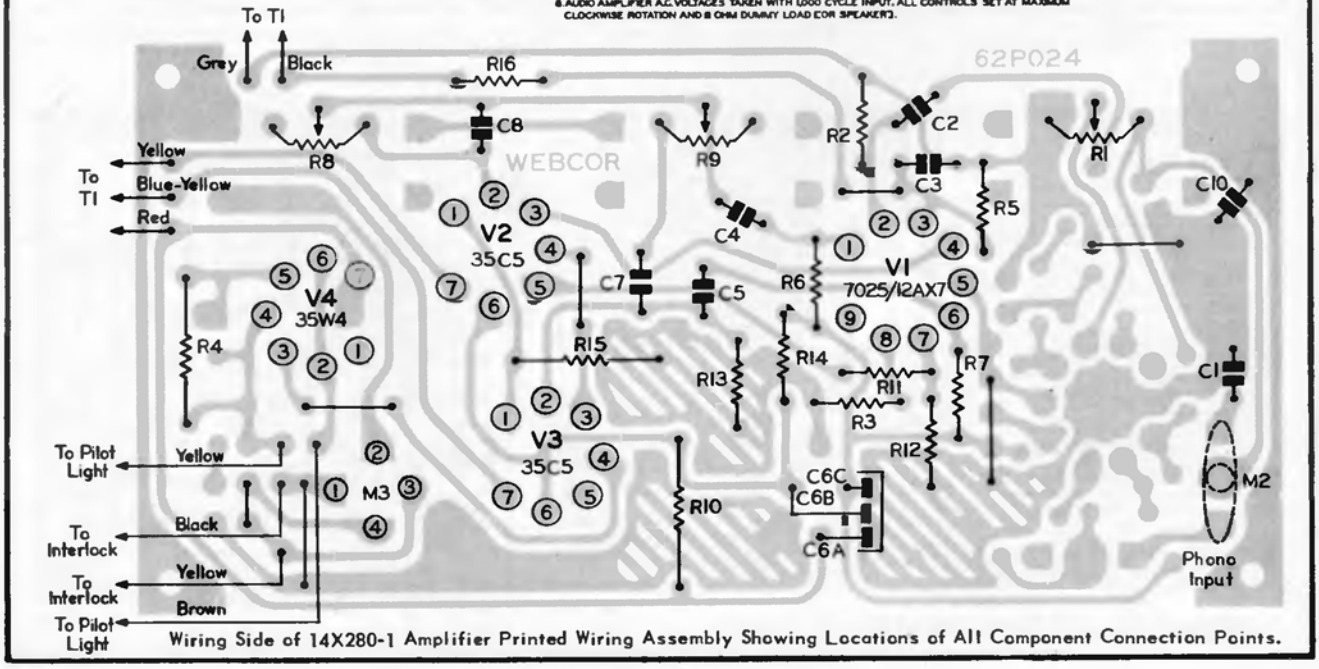


Wiring Side of 14X280-1 Amplifier Printed Wiring Assembly Showing Locations of All Component Connection Points.

## WEBCOR Model 1956, using Amplifier 14X307

Model 1956 is a Stereo-Fidelity Fonograf that contains a 5", 3.2 ohm speaker for the right channel (Ch. 1) and a 5", 3.2 ohm speaker for the left channel (Ch. 2). Each speaker is mounted in the case side by side at a 7 degree angle for better separation of the right and left channels. In addition an External Speaker Output Jack is incorporated. This jack permits connecting a 3.2 ohm External Speaker System to the fonograf if additional separation of the 2 channels is desired. When an External Speaker System is plugged into the External Speaker Output Jack, the left channel speaker in the fonograf is cut out.

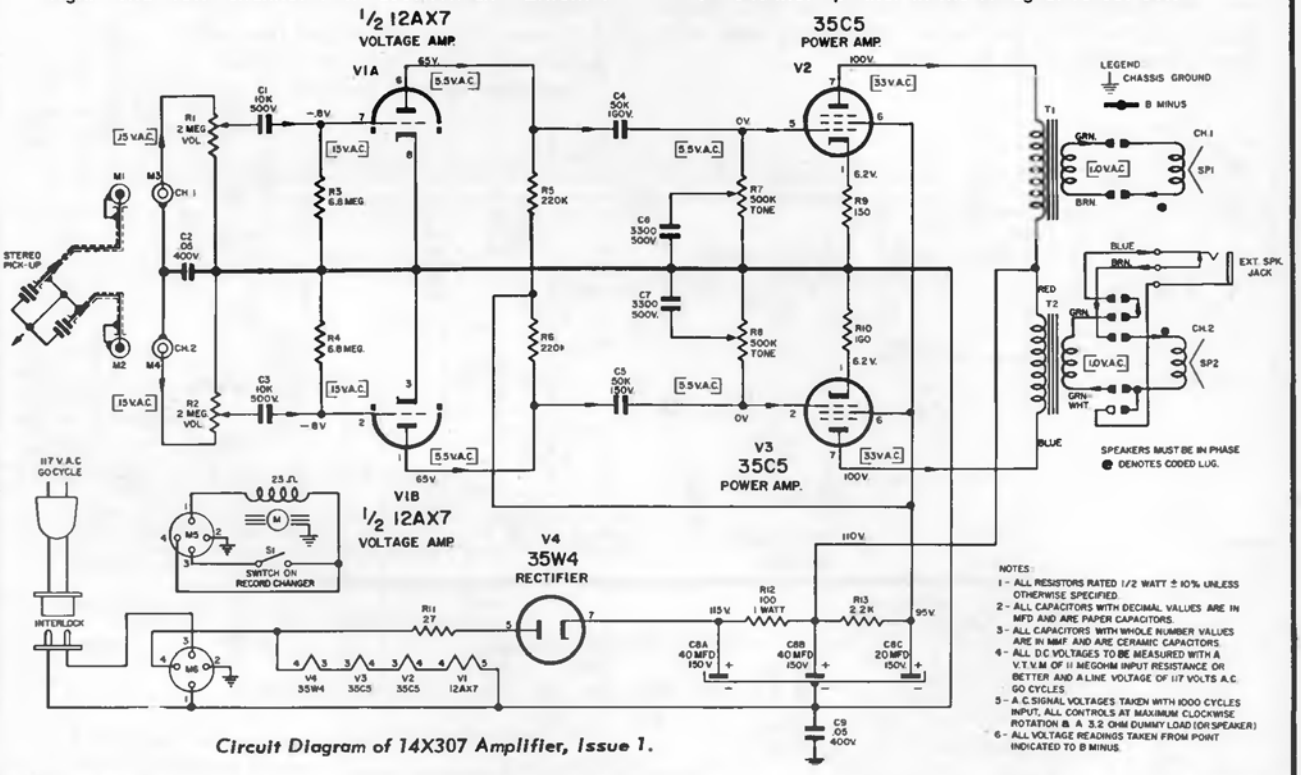


*Circuit Diagram of 14X307 Amplifier, Issue 1.*

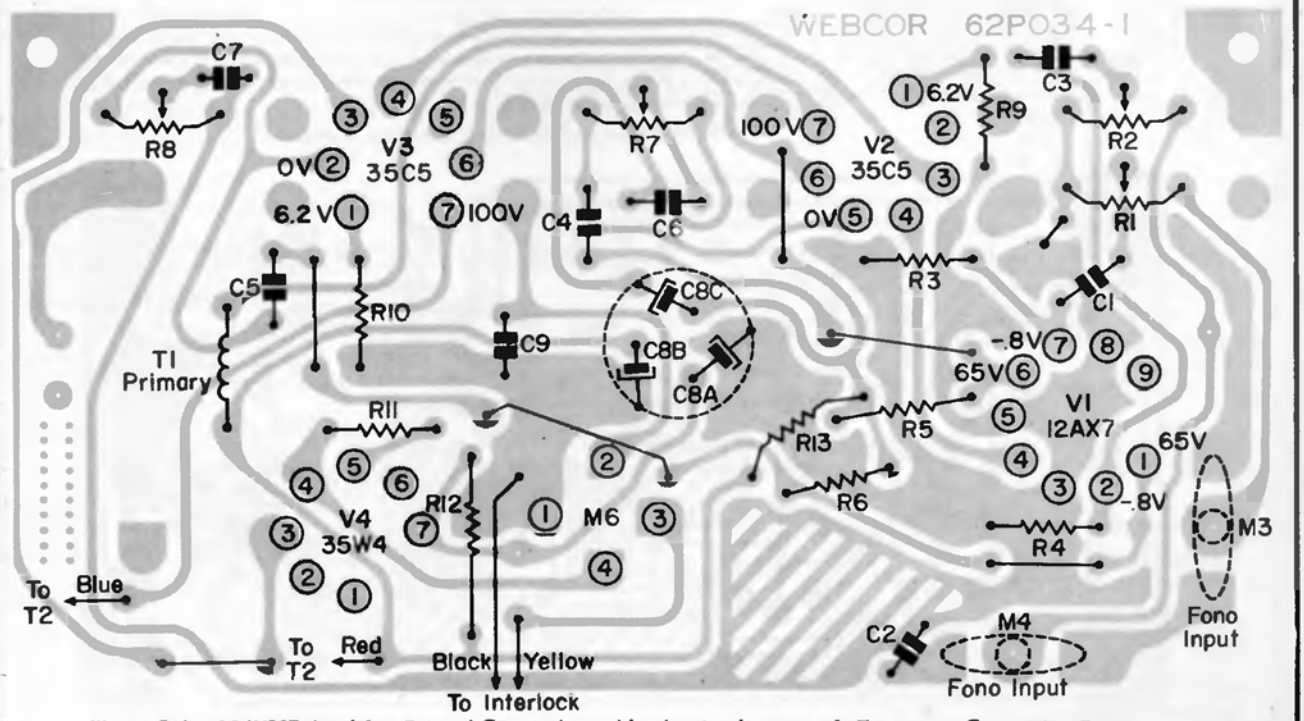


*Wiring Side of 14X307 Amplifier Printed Circuit Assembly showing location of Component Connection Points.*

## WEBCOR Model 1963, using Amplifier 14X280-2

**Stereo Output Jack:** The Stereo Output Jack an the rear of the Haliday Imperial Cabinet makes it possible to connect a second sound system (amplifier and speakers) for Stereofonic reproduction. Webcor Model 4905 Companion Stereofonic Sound System is designed for use with the Holiday Imperial. When using the 4905 Saund System, connection to the Holiday Imperial is made with Stereo Connecting Cord No. 2933.

When replacing cartridge housing and bracket assembly (Webcor Part No. 21P587), connect leads from pick-up cord as follows:

1. Connect red lead to silver terminal.
2. Connect shield to terminal adjacent to silver terminal.
3. Connect white lead to gold terminal.
4. Connect black lead to terminal adjacent to gold terminal.

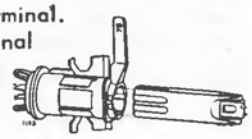

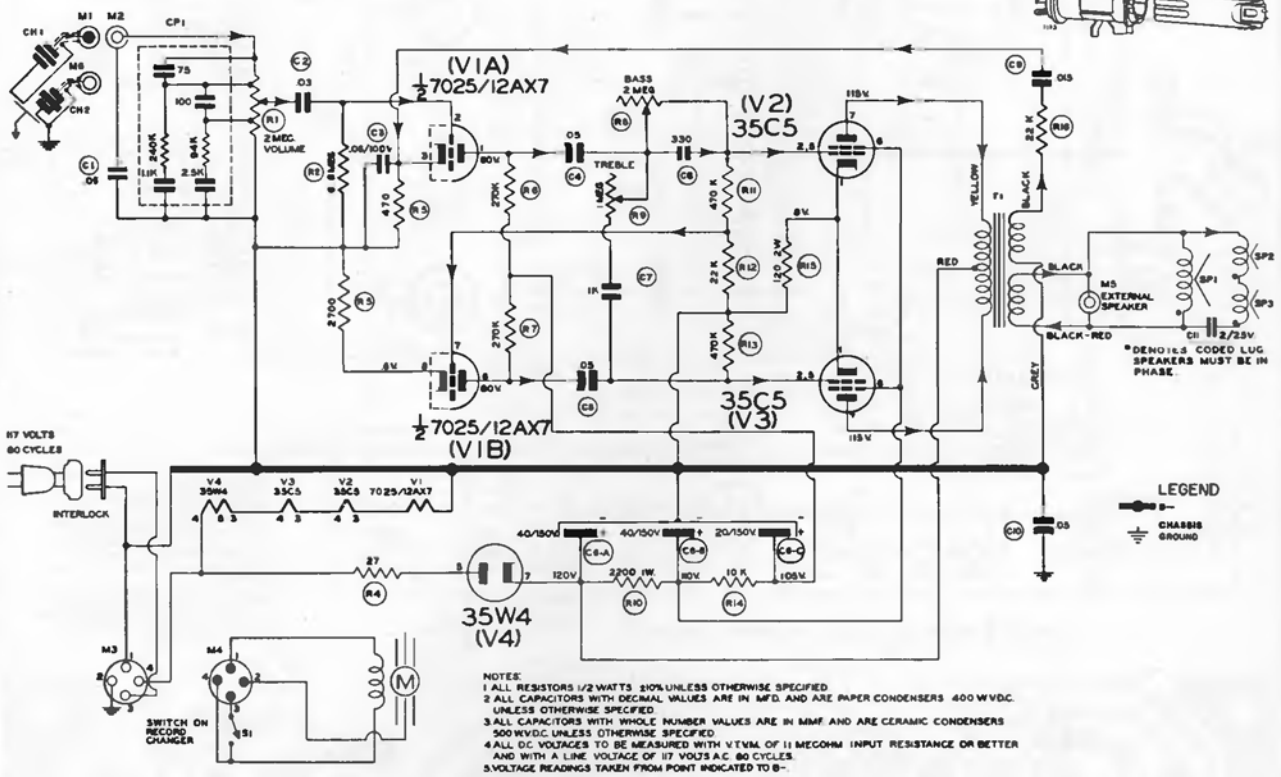


**Circuit Diagram of 14X280-2 Amplifier, Issue 1.**

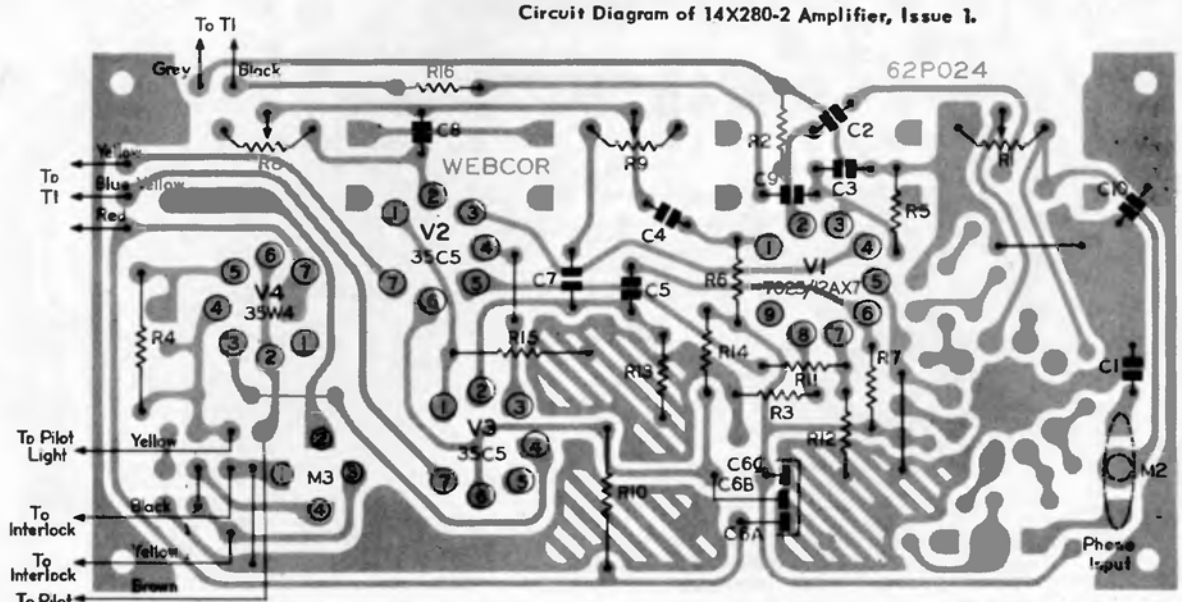


**Wiring Side of Amplifier Printed Wiring Assembly Showing Locations of All Component Connection Points.**

# WESTERN AUTO SUPPLY CO.

## MODELS D2832A & D2834A D2832B & D2834B

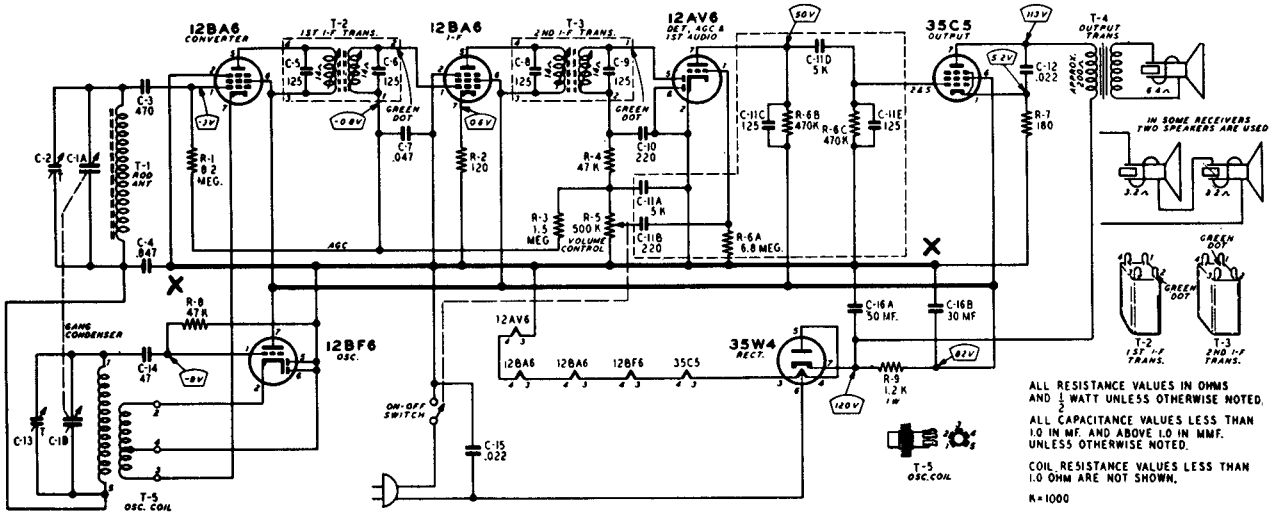


### TUBE SOCKET VOLTAGES

Socket voltages are shown on the schematic diagram at the tube socket terminals. Atl voltages are between the socket terminal and "X" point. Voltages were taken with a vacuum tube voltmeter. Conditions of measurement are:

Line voltage ..... 117 Volts AC
Signal Input .....None
A Variation of ± 10% is usually permissible.

### SPECIFICATIONS

**6 Tube Superheterodyne, Including Rectifier Tube.**
**Tuning Frequency Range..... 540 to 1600 KC**
**Power Consumption.....35 watts (At 117 volts AC)**
**Power Output 1.3 watt maximum, 0.8 watt (10% distortion)**
**Intermediate Frequency..... 455 KC**
**Sensitivity.....80 Microvolts Per Meter Average**
**Selectivity..... 50 KC Wide at 1000 Times Signal**
**Speaker ..... 4" PM Dynamic**

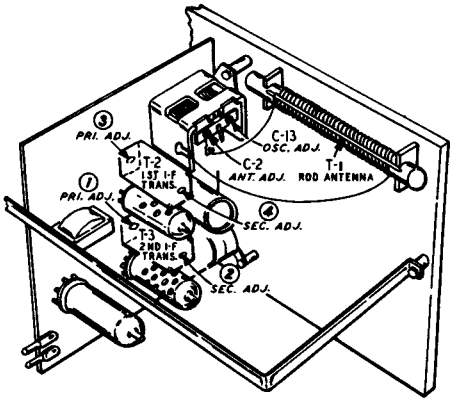


### ALIGNMENT PROCEDURE

The followiag equipment is required for aligniag; Signal Generator which will provide an accurately calibrated signal at the test frequencies as listed.
Output Indicating Meter: Non-Metallic Screwdriver.

Dummy Antennas–.1 mf., 50 mmf.
Volume Control–Maximum All Adjustments.
Allow Chassis and Signal Generator to "Heat Up" for several Minutes.

| FREQUENCY SETTING | SIGNAL GENERATOR ANTENNA CONNECTION | SIGNAL GENERATOR GROUND CONNECTION | DUMMY ANTENNA | GANG CONDENSER SETTING | ADJUST TUNING SLUGS (I.F.) AND TRIMMERS TO MAXIMUM |
|---|---|---|---|---|---|
| 455 KC | Control Grid 12BA6-I.F. Prong No. 1 | "X" Point | .1 mf. | Turn Rotor to full open | 2nd I.F. Pri. (1) & Sec. (2) |
| 455 KC | Control Grid 12BA6 Mixer Prong No. 1 | "X" Point | .1 mf. | Turn Rotor to full open | 1st I.F. Pri. (3) & Sec. (4)<br>2nd I.F. Pri. (1) & Sec. (2) |
| 1620 KC | Control Grid 12BA6 Mixer Prong No. 1 | "X" Point | .1 mf. | Turn Totor to full open | Oscillator (C-13) |
| 1400 KC | Std. Loop Connected to Signal Generator | | | Tune Receiver to 1400 KC. | Antenna (C-2) Trimmer |

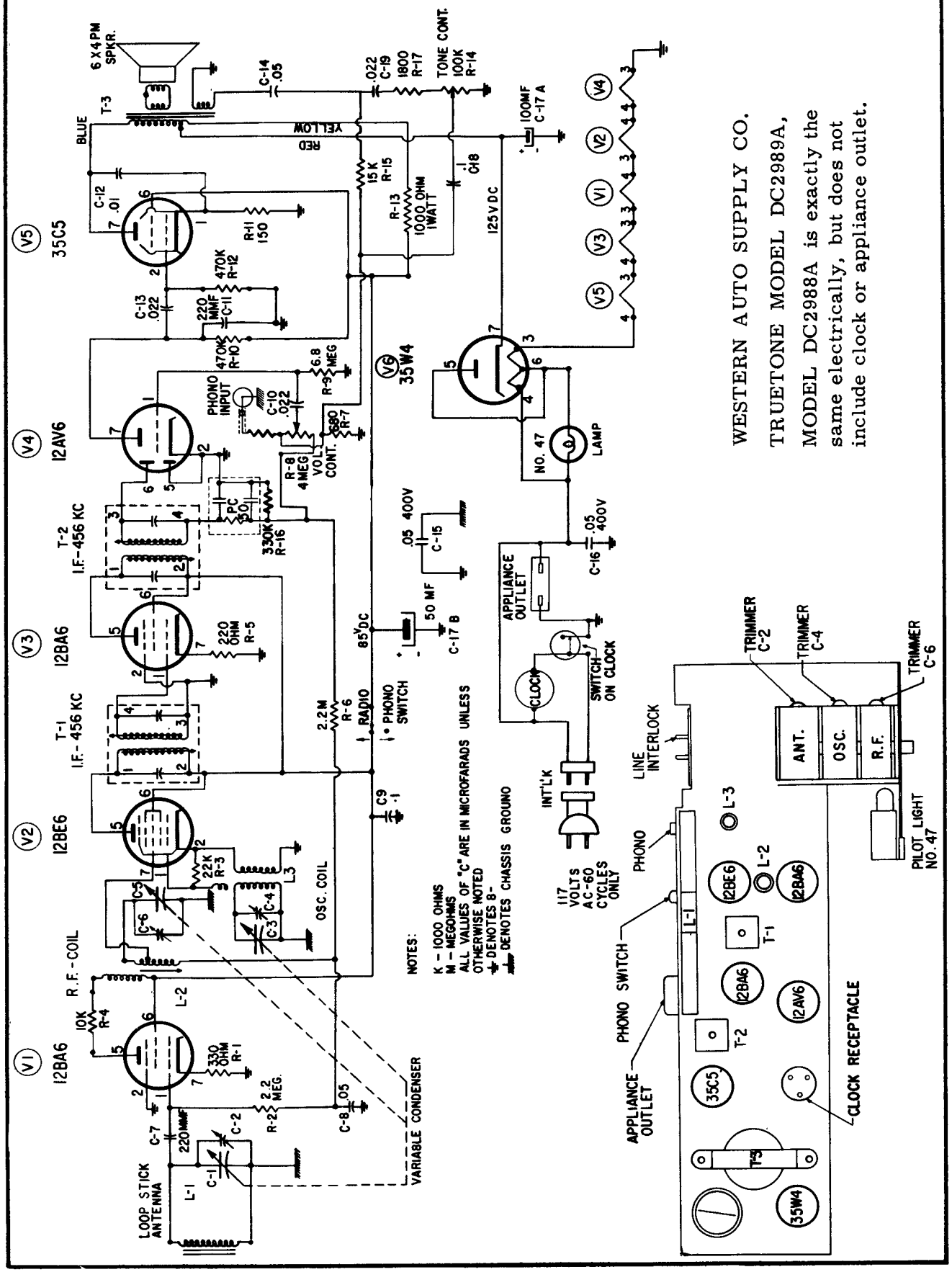
WESTERN AUTO SUPPLY CO.
TRUETONE MODEL DC2989A,
MODEL DC2988A is exactly the same electrically, but does not include clock or appliance outlet.
6 X 4 PM SPKR.
T-3
BLUE
RED
YELLOW
C-14 .05
.022 C-19
1800 R-17
TONE CONT. 100K R-14
100MF C-17 A
V5 35C5
C-12 .01
R-11 150
470K R-12
C-13 .022
220 MMF C-11
470K R-10
15K R-15
R-13 1000 OHM 1WATT
.1 C18
125 V DC
V6 35W4
V4 12AV6
PHONO INPUT
C-10 .022
6.8 MEG R-9
680 R-7
R-8 4MEG VOL. CONT.
NO. 47 LAMP
T-2 I.F.-456 KC
PC 150
330K R-16
.05 400V C-15
.05 400V C-16
V3 12BA6
220 OHM R-5
T-1 I.F.-456 KC
85 V DC
50 MF C-17 B
APPLIANCE OUTLET
CLOCK
SWITCH ON CLOCK
2.2 M R-6
RADIO
PHONO SWITCH
C9 .1
V2 12BE6
22K R-3
L3
OSC. COIL
C-5
C-6
C-3
C-4
R.F.-COIL
L-2
10K R-4
V1 12BA6
330 OHM R-1
2.2 MEG. R-2
C-8 .05
C-7 220 MMF
C-2
C-1
L-1
LOOP STICK ANTENNA
VARIABLE CONDENSER
NOTES:
K - 1000 OHMS
M - MEGOHMS
ALL VALUES OF "C" ARE IN MICROFARADS UNLESS OTHERWISE NOTED
DENOTES B-
DENOTES CHASSIS GROUND
INT'LK
117 VOLTS AC-60 CYCLES ONLY
LINE INTERLOCK
PHONO
PHONO SWITCH
APPLIANCE OUTLET
TRIMMER C-2
TRIMMER C-4
TRIMMER C-6
ANT.
OSC.
R.F.
PILOT LIGHT NO. 47
CLOCK RECEPTACLE
L-3
L-2
L-1
T-1
T-2
T-3
12BE6
12BA6
12AV6
35C5
35W4

# Westinghouse

## MODELS H-629T4A, H-630T4A, H-631T4A, CHASSIS V-2239-7

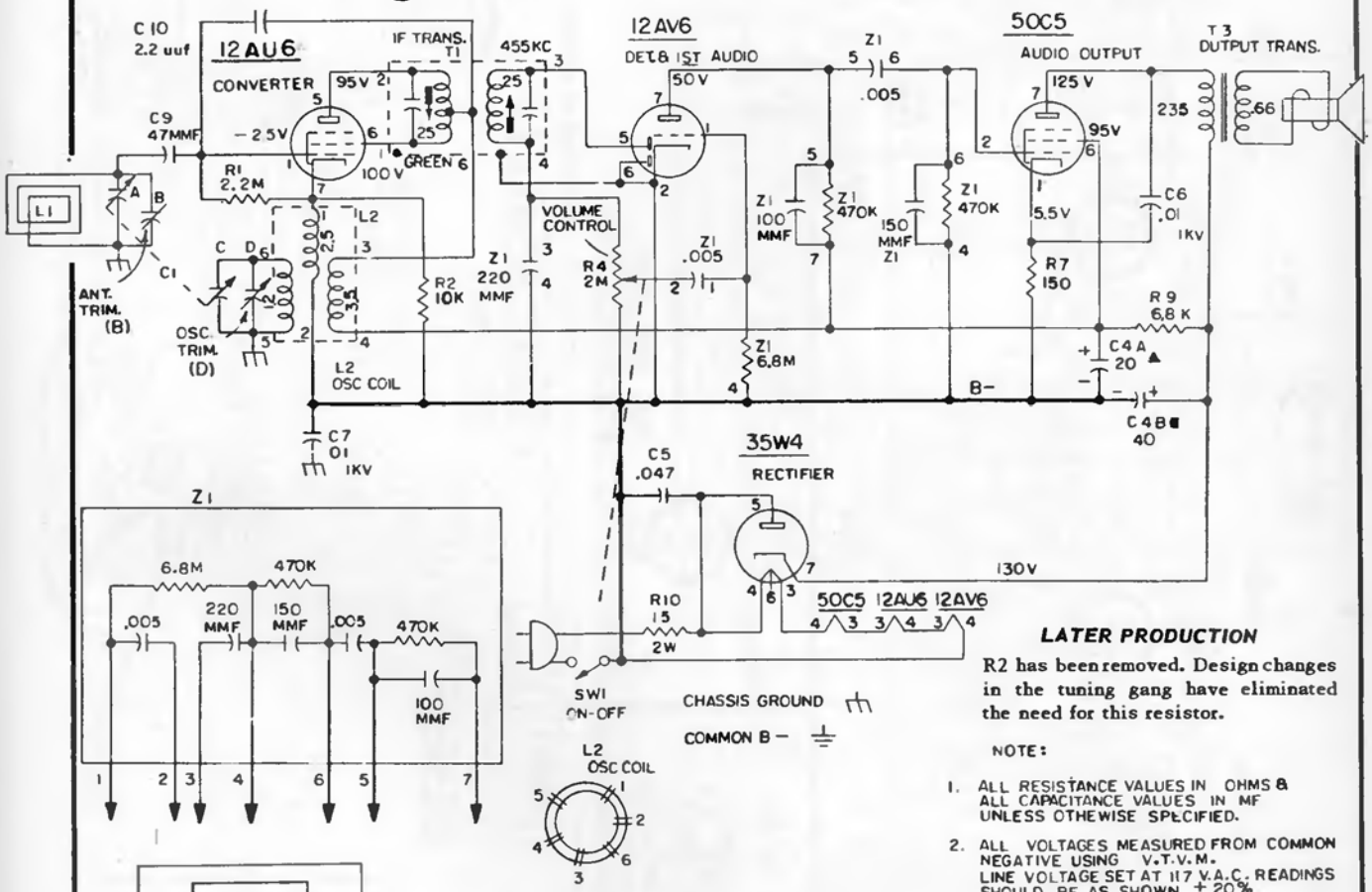


### LATER PRODUCTION

R2 has been removed. Design changes in the tuning gang have eliminated the need for this resistor.

NOTE:

1. ALL RESISTANCE VALUES IN OHMS & ALL CAPACITANCE VALUES IN MF UNLESS OTHEWISE SPECIFIED.
2. ALL VOLTAGES MEASURED FROM COMMON NEGATIVE USING V.T.V.M. LINE VOLTAGE SET AT 117 V.A.C. READINGS SHOULD BE AS SHOWN ± 20%

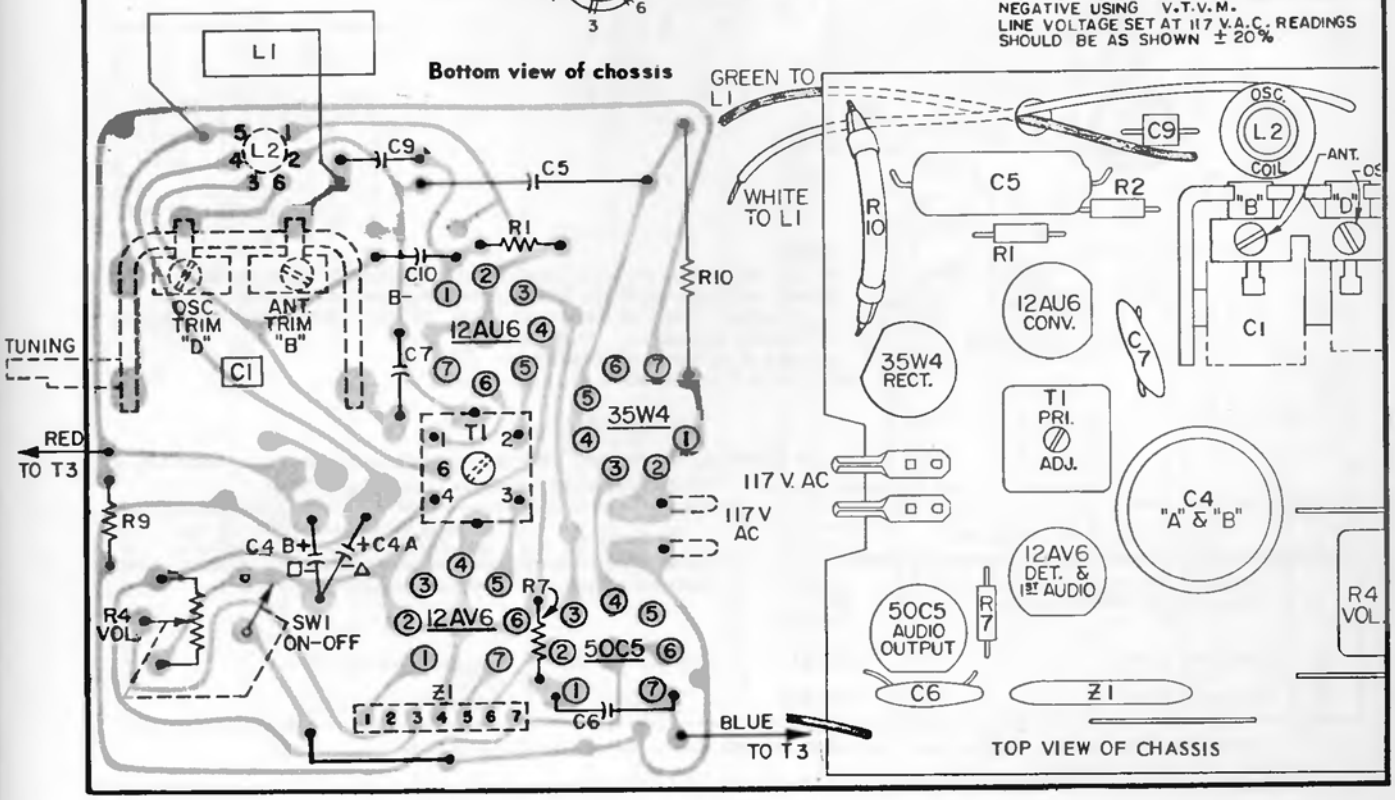

## WESTINGHOUSE Chassis V-2239-6, Models H-677T4, H-678T4, H-679T4

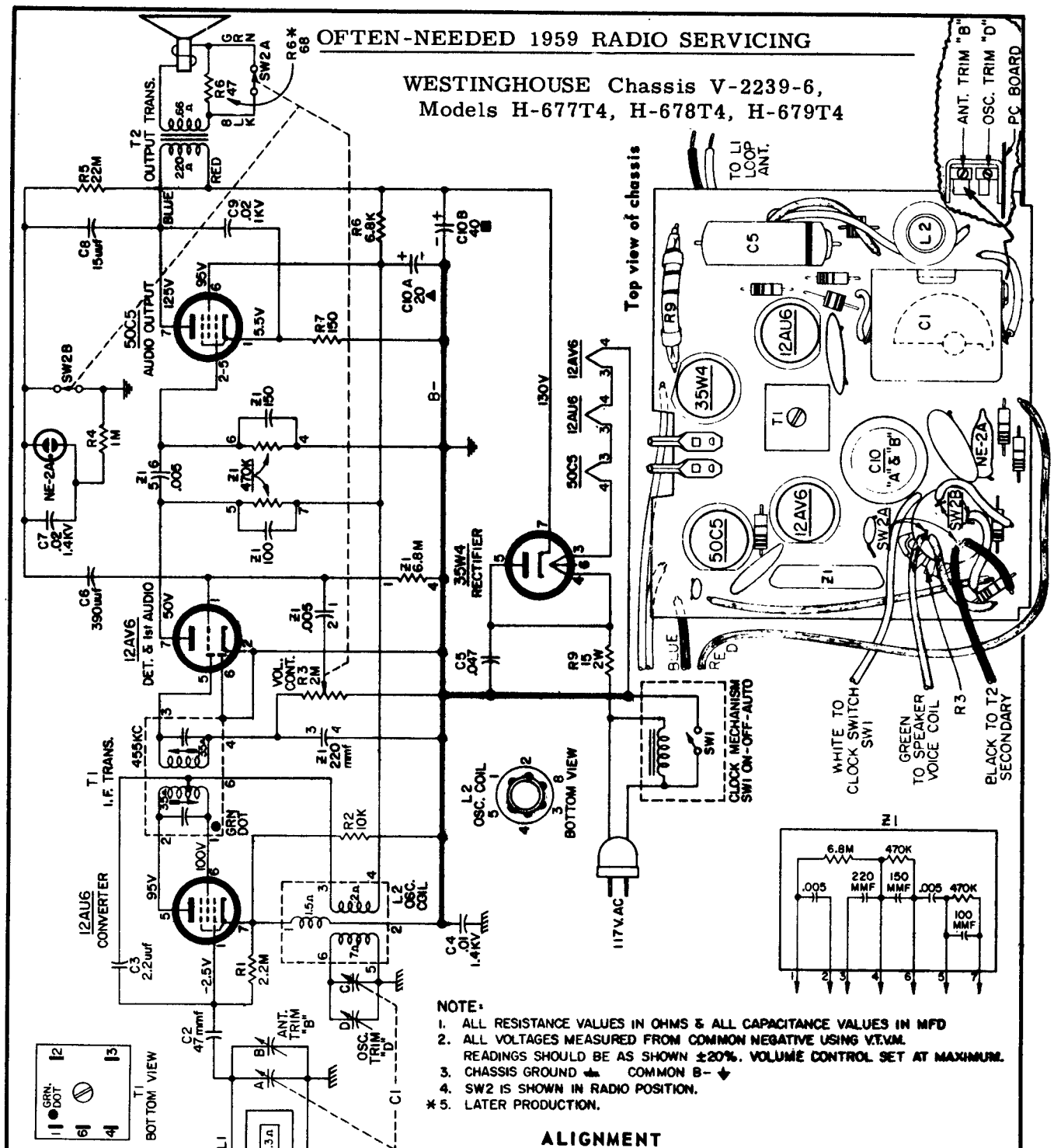


NOTE:
1. ALL RESISTANCE VALUES IN OHMS & ALL CAPACITANCE VALUES IN MFD
2. ALL VOLTAGES MEASURED FROM COMMON NEGATIVE USING V.T.V.M. READINGS SHOULD BE AS SHOWN ±20%. VOLUME CONTROL SET AT MAXIMUM.
3. CHASSIS GROUND ⏚ COMMON B- ⏚
4. SW2 IS SHOWN IN RADIO POSITION.
*5. LATER PRODUCTION.

### ALIGNMENT

While making the following adjustments, keep the volume control set for maximum output and the signal generator output attenuated to weakest usable signal level.

| Step | Connect Signal Generator to – | Signal Gen. Frequency | Radio Dial | Connect VTVM Across Voice Coil and Adjust for Maximum Output – |
|---|---|---|---|---|
| 1 | Stator of ant. tuning capacitor (A) through a 200 mmf capacitor. | 455KC 400 Cps. 30% Mod. | Minimum capacity | Top and bottom slugs of T1. * |
| 2 | Radiated signal | 1625 KC | Minimum capacity | Oscillator trimmer (D) |
| 3 | Radiated signal | 1400 KC | 1400 KC | Antenna trimmer (B) |

* It is recommended that a fiber aligning tool that snugly fits the slot in the powdered iron core be used to prevent chipping of the slot.

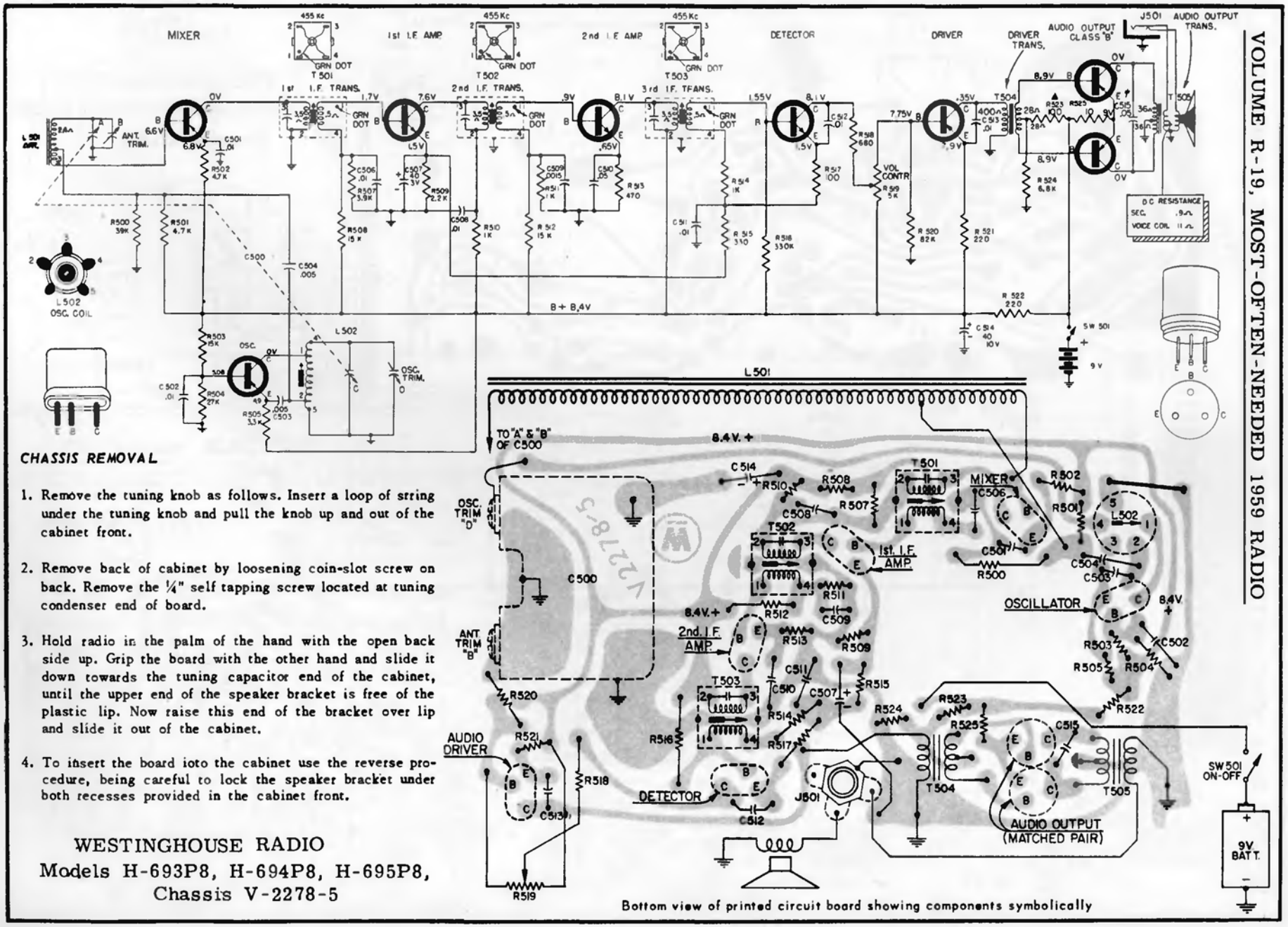


Bottom view of printed circuit board showing components symbolically

## CHASSIS REMOVAL

1. Remove the tuning knob as follows. Insert a loop of string under the tuning knob and pull the knob up and out of the cabinet front.

2. Remove back of cabinet by loosening coin-slot screw on back. Remove the ¼" self tapping screw located at tuning condenser end of board.

3. Hold radio in the palm of the hand with the open back side up. Grip the board with the other hand and slide it down towards the tuning capacitor end of the cabinet, until the upper end of the speaker bracket is free of the plastic lip. Now raise this end of the bracket over lip and slide it out of the cabinet.

4. To insert the board into the cabinet use the reverse procedure, being careful to lock the speaker bracket under both recesses provided in the cabinet front.

WESTINGHOUSE RADIO
Models H-693P8, H-694P8, H-695P8,
Chassis V-2278-5

# Westinghouse

## Models H-632T5A, H-633T5A, Chassis V-2390-4

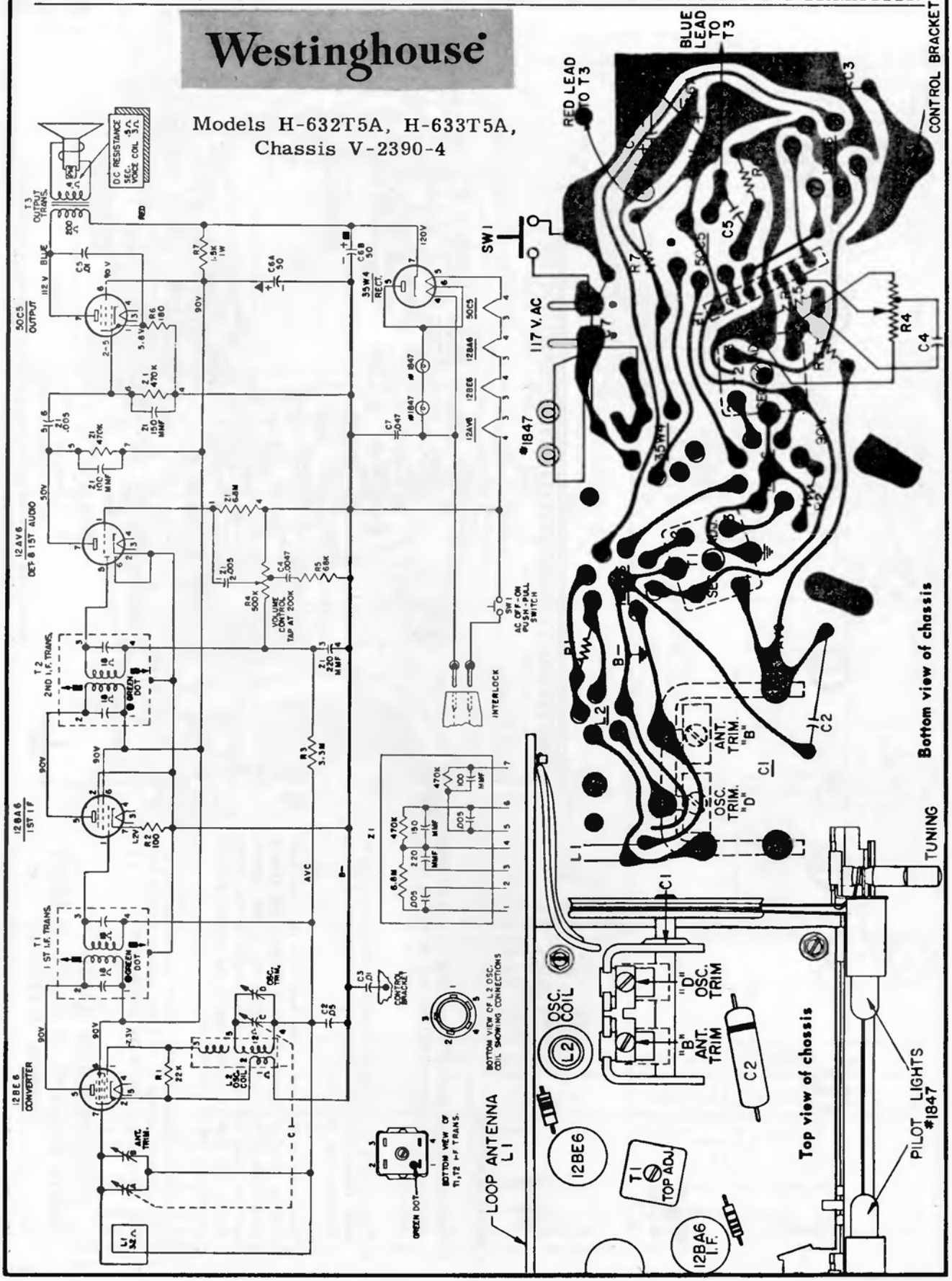

# Westinghouse

## Models H-636T6A, H-637T6A, Chassis V-2391-6

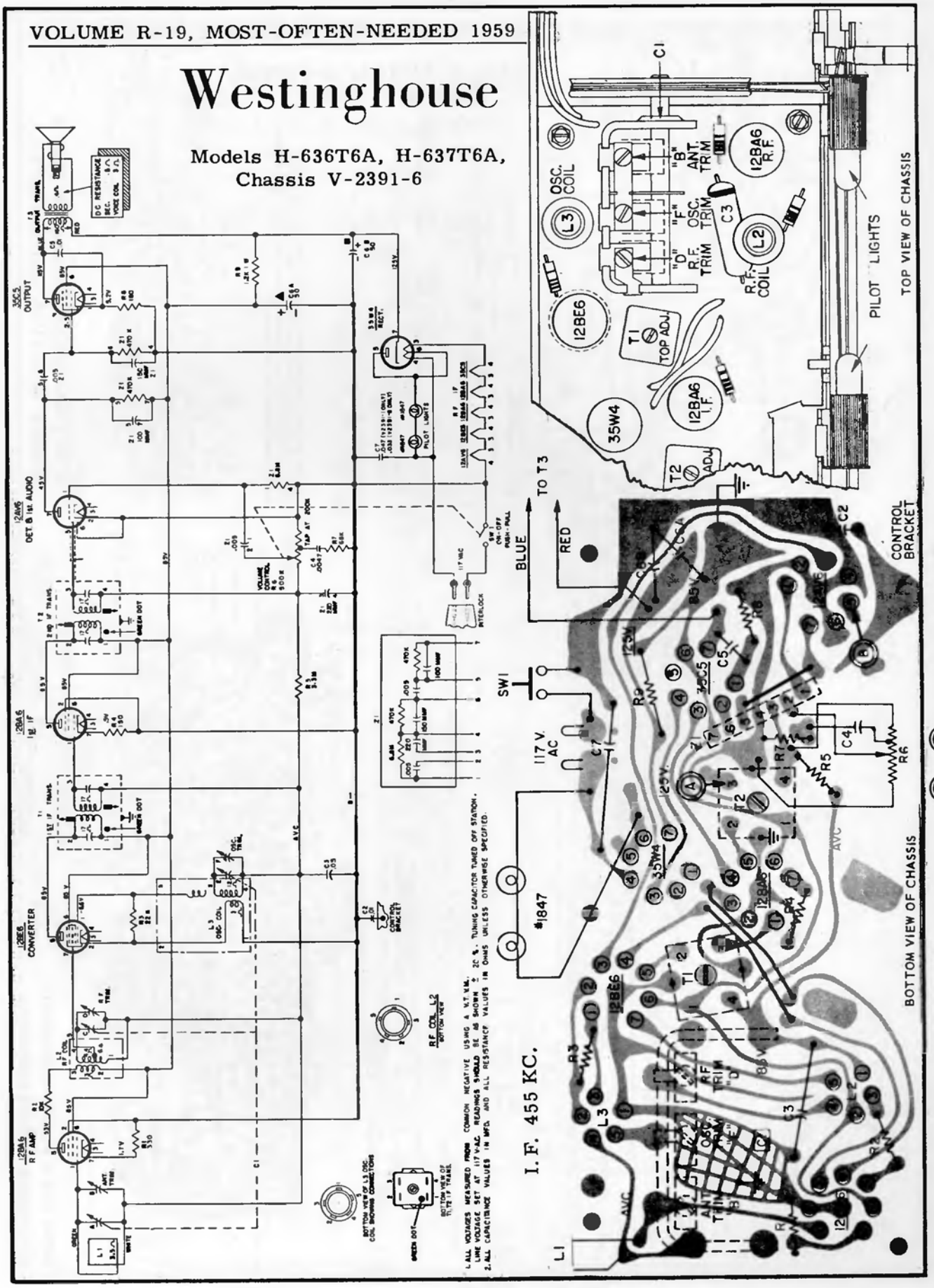

# Westinghouse

## Models H-649T7A, H-650T7A, Chassis V-2392-4

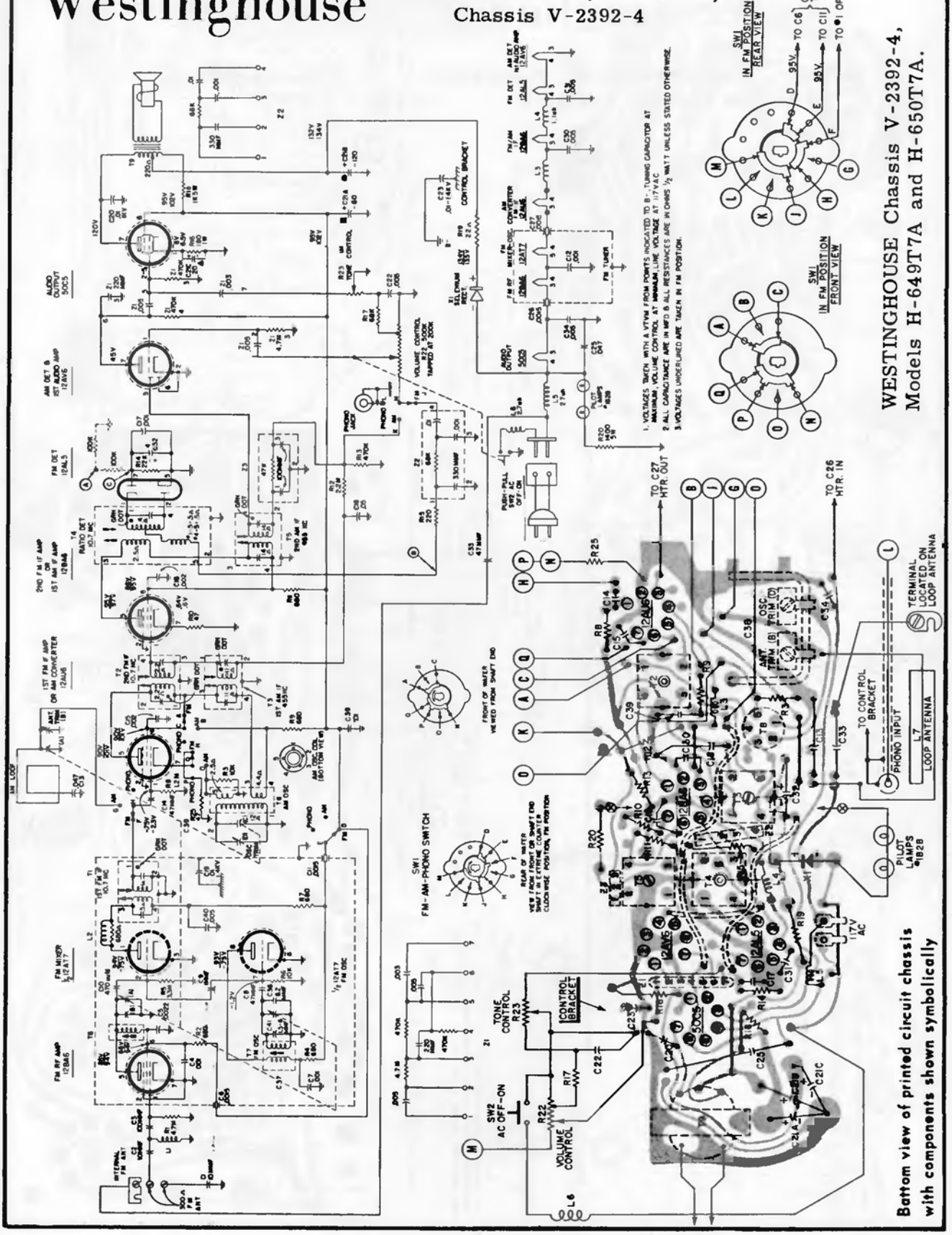

# Westinghouse Chassis V-2393-1

## Models H-655P5, H-656P5, H-657P5

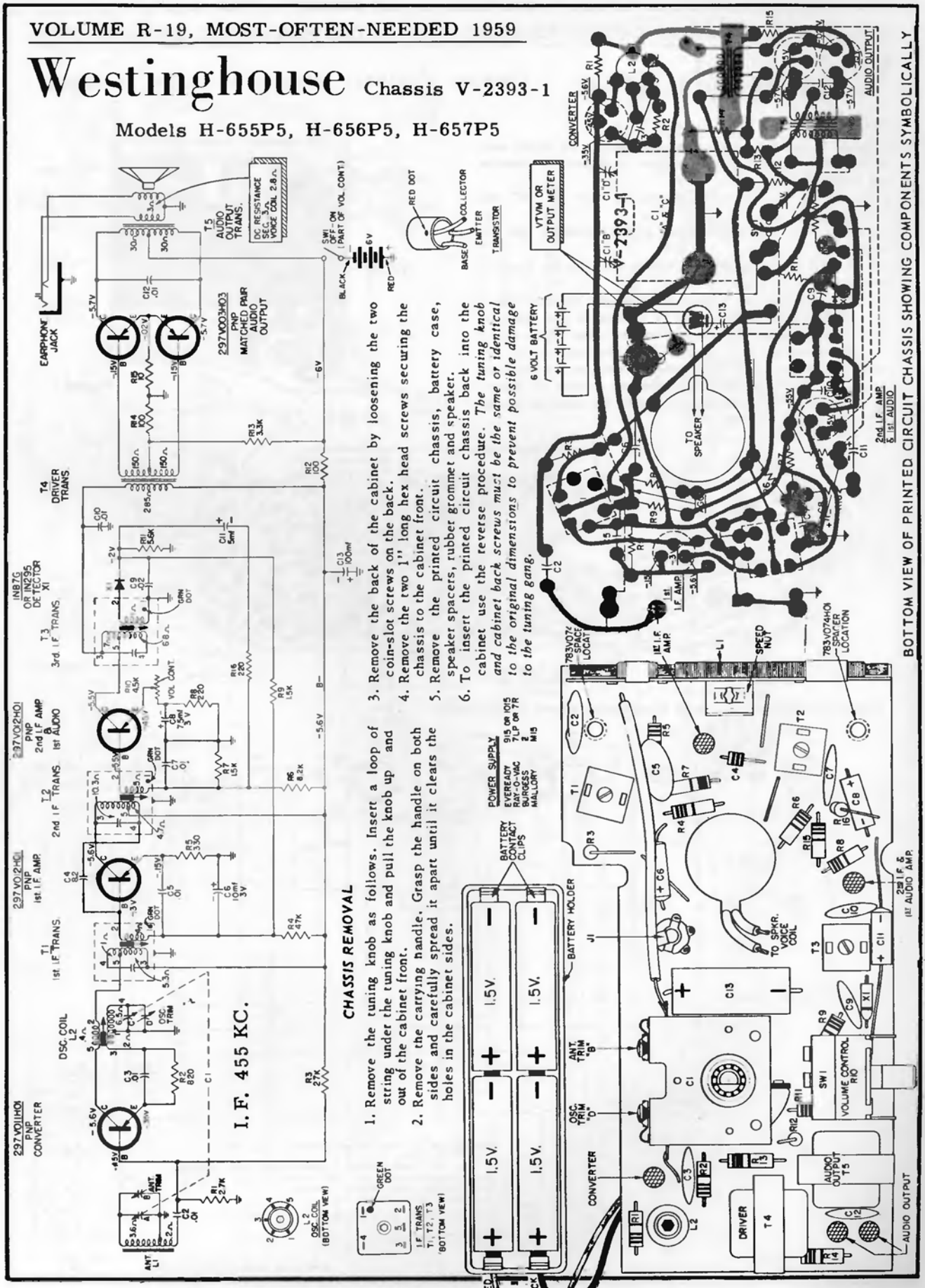

# Westinghouse

## Chassis V-2394-1, Models H-659P4, H-660P4

***CHASSIS REMOVAL*** (See figure 1)

1. Press in the two cabinet release buttons on either side of the receiver case. Open the case to expose the chassis and batteries.
2. Unsnap the battery cable assemblies from the "A" and "B" batteries.
3. Remove the two self-tapping screws securing the AC receptacle.
4. Remove the two self-tapping screws securing the chassis bracket to the top of the case.
5. Carefully slide the chassis out from the receiver case. The on-off-volume control knob is captivated and thus remains in the case as the control shaft is pulled off the knob.

When servicing with the receiver connected to the AC power line use an isolation transformer between the receiver and the AC line. To replace the chassis reverse the above procedure. Be careful to correctly seat the chassis in the cabinet mounting grooves.

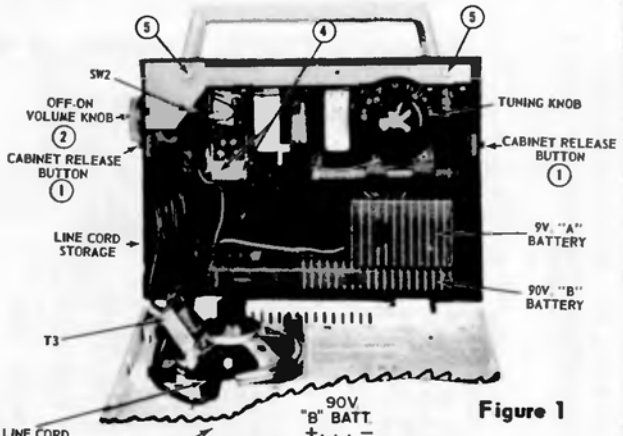


Figure 1

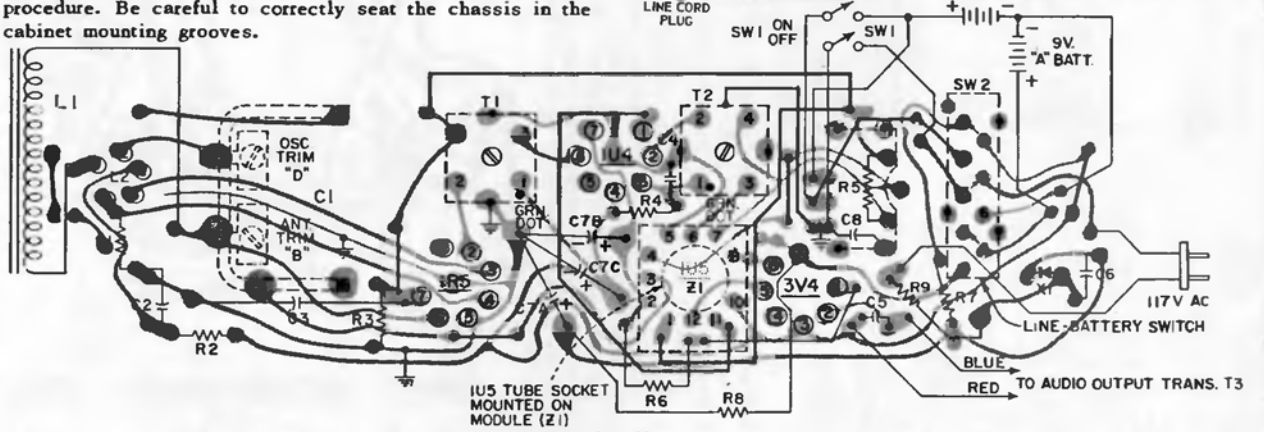


**Bottom view of chassis with components shown symbolically**

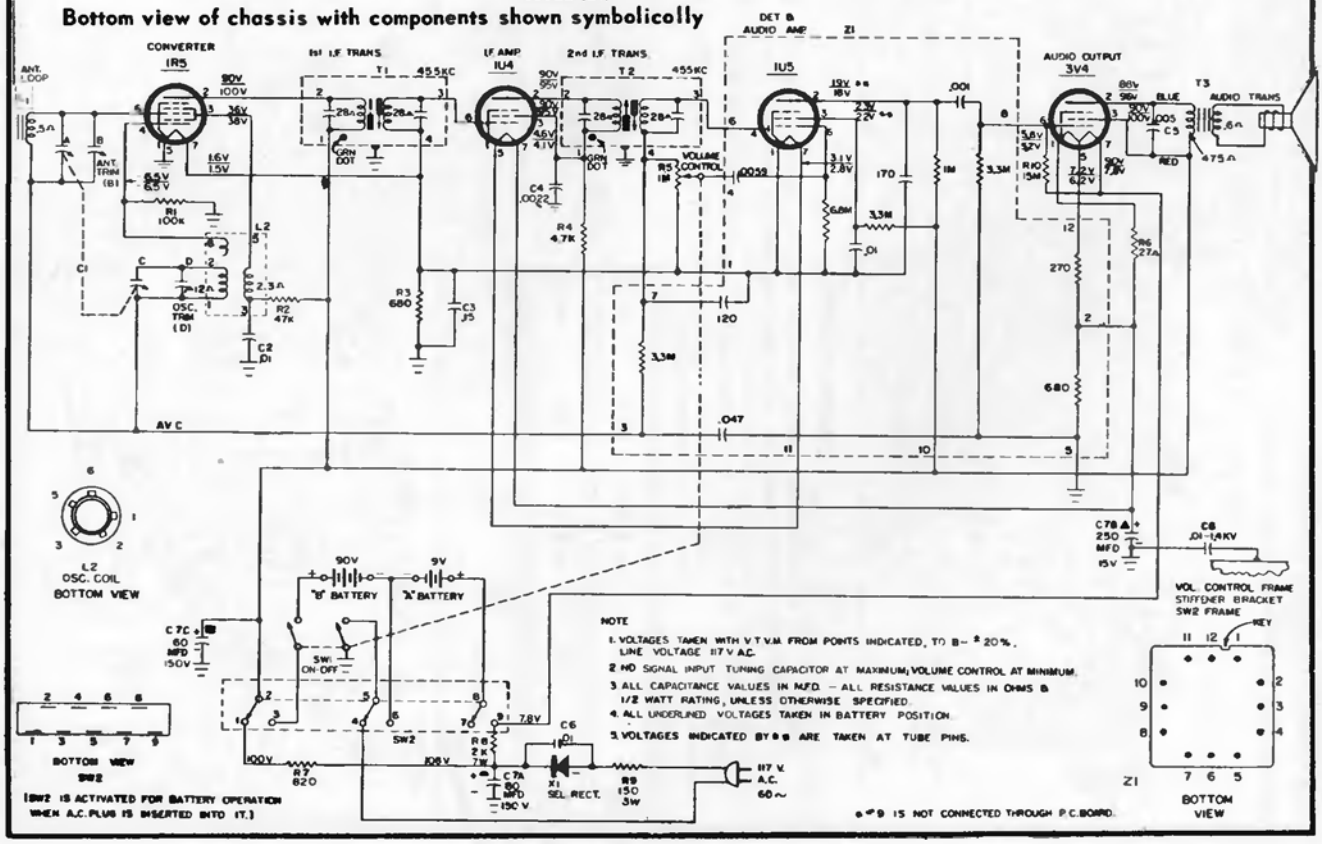

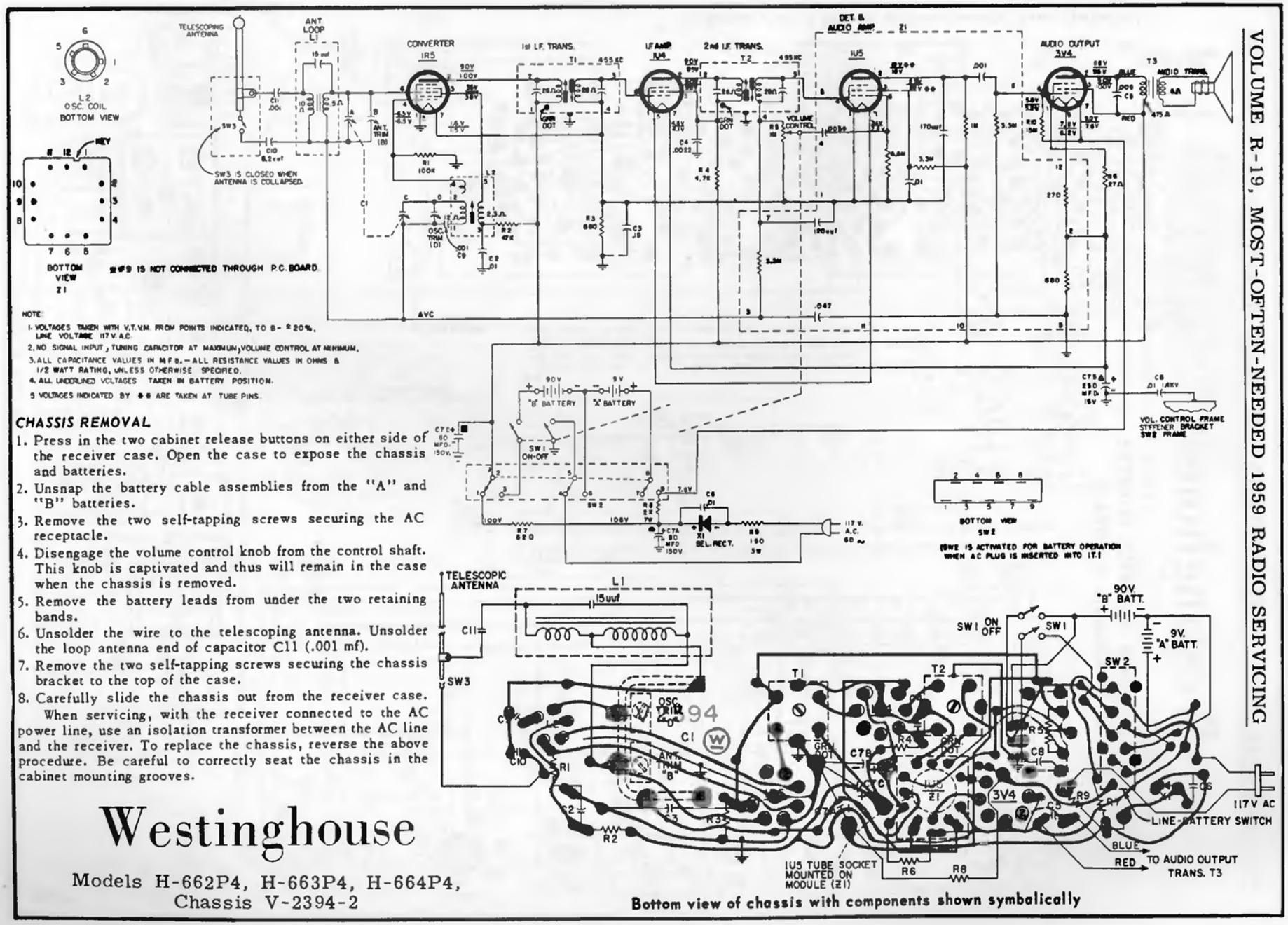


Bottom view of chassis with components shown symbalically

NOTE:

1. VOLTAGES TAKEN WITH V.T.V.M. FROM POINTS INDICATED, TO B- ±20%, LINE VOLTAGE 117 V. A.C.
2. NO SIGNAL INPUT, TUNING CAPACITOR AT MAXIMUM, VOLUME CONTROL AT MINIMUM.
3. ALL CAPACITANCE VALUES IN M F D.—ALL RESISTANCE VALUES IN OHMS & 1/2 WATT RATING, UNLESS OTHERWISE SPECIFIED.
4. ALL UNDERLINED VOLTAGES TAKEN IN BATTERY POSITION.
5. VOLTAGES INDICATED BY ** ARE TAKEN AT TUBE PINS.

## CHASSIS REMOVAL

1. Press in the two cabinet release buttons on either side of the receiver case. Open the case to expose the chassis and batteries.
2. Unsnap the battery cable assemblies from the "A" and "B" batteries.
3. Remove the two self-tapping screws securing the AC receptacle.
4. Disengage the volume control knob from the control shaft. This knob is captivated and thus will remain in the case when the chassis is removed.
5. Remove the battery leads from under the two retaining bands.
6. Unsolder the wire to the telescoping antenna. Unsolder the loop antenna end of capacitor C11 (.001 mf).
7. Remove the two self-tapping screws securing the chassis bracket to the top of the case.
8. Carefully slide the chassis out from the receiver case.

When servicing, with the receiver connected to the AC power line, use an isolation transformer between the AC line and the receiver. To replace the chassis, reverse the above procedure. Be careful to correctly seat the chassis in the cabinet mounting grooves.

# Westinghouse

Models H-662P4, H-663P4, H-664P4,
Chassis V-2394-2

# Westinghouse

## Models H-666P5, H-667P5, Chassis V-2394-3

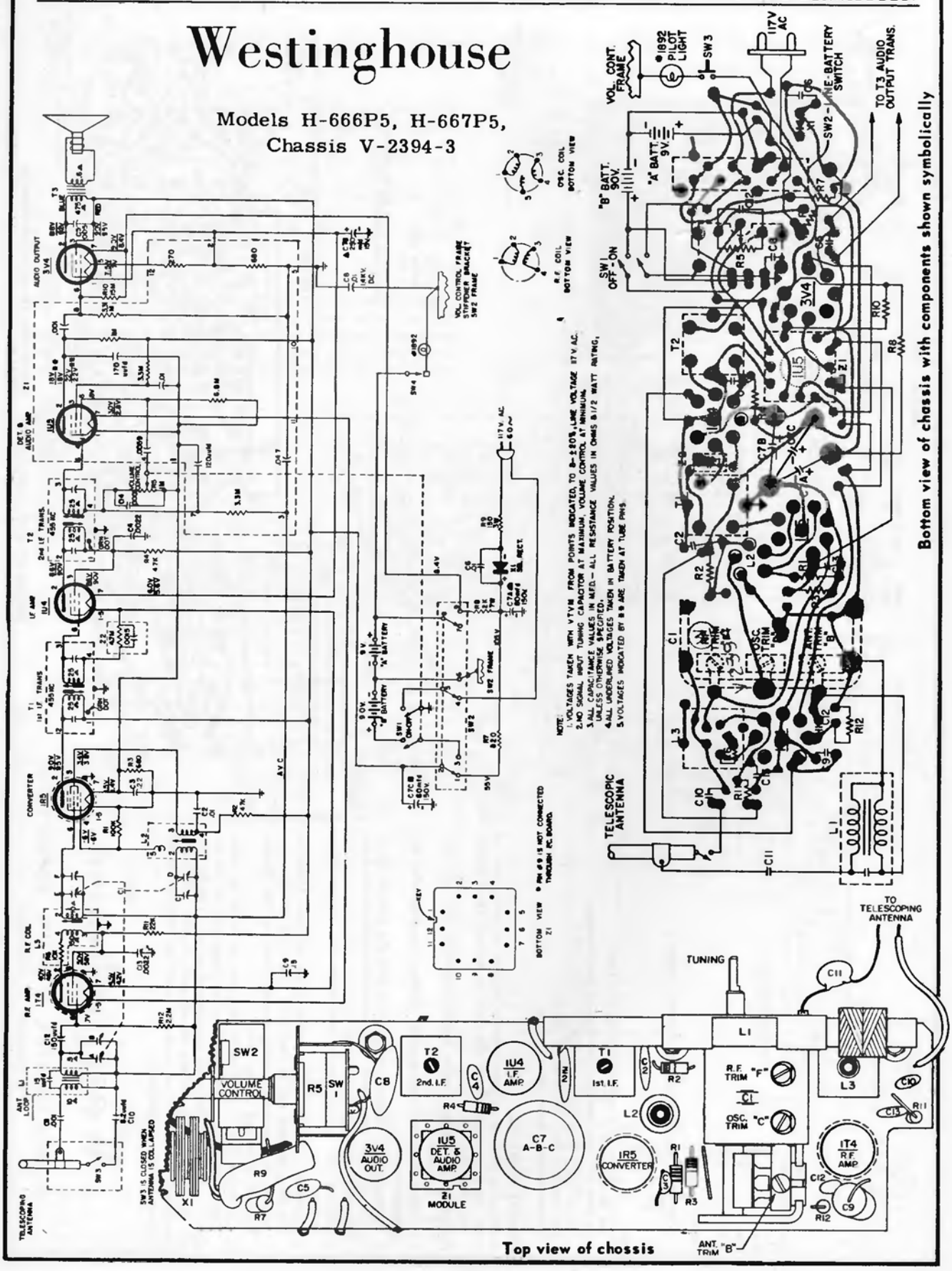

# Westinghouse®

## Models H-681T5, H-682T5, H-683T5, Chassis V-2395-1

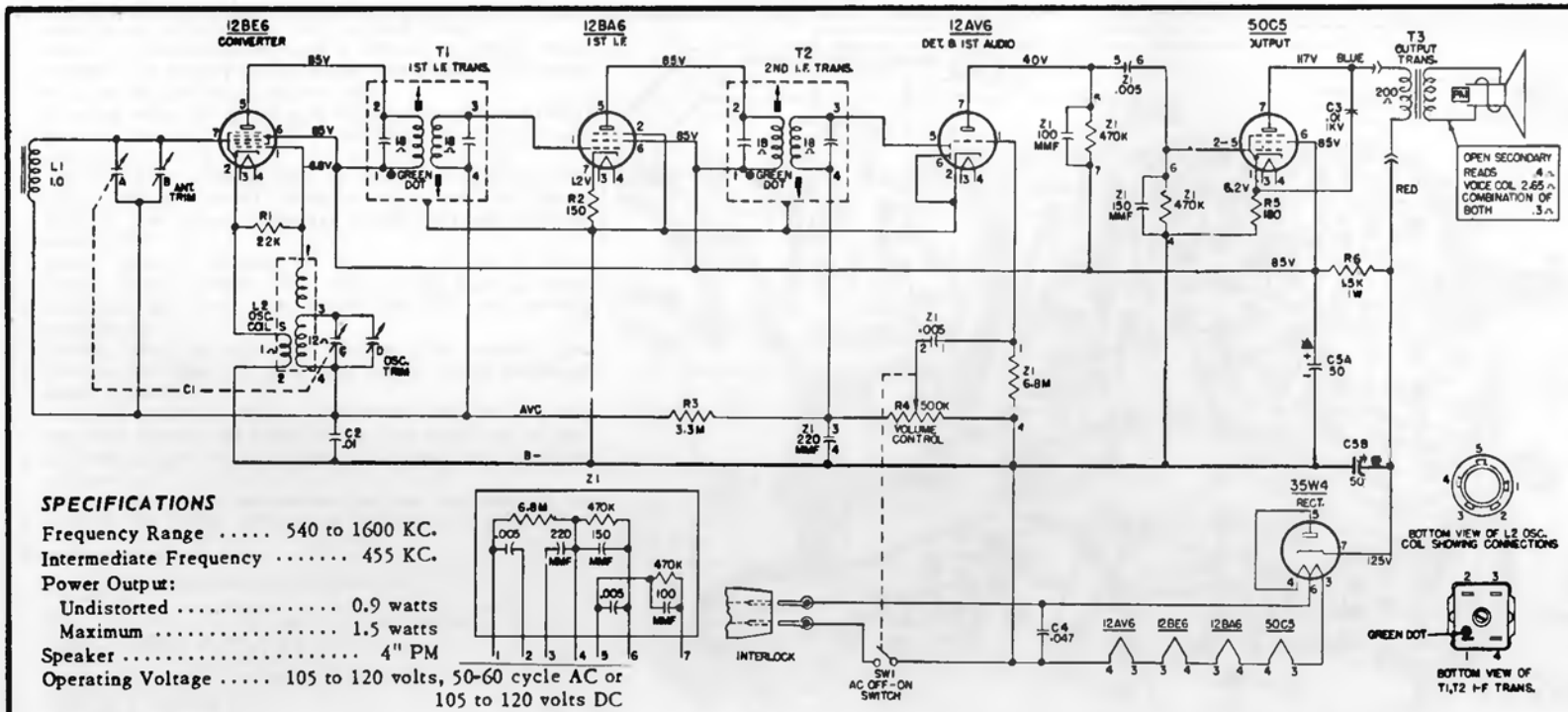


### SPECIFICATIONS

Frequency Range ..... 540 to 1600 KC.
Intermediate Frequency ..... 455 KC.
Power Output:
Undistorted ..... 0.9 watts
Maximum ..... 1.5 watts
Speaker ..... 4" PM
Operating Voltage ..... 105 to 120 volts, 50-60 cycle AC or 105 to 120 volts DC
Power Consumption ..... 30 watts

### PRINTED BOARD REMOVAL

1. Disengage captivated volume control knob (located on side of cabinet) from volume control shaft.
2. Remove two screws from rear of cabinet.
3. Loosen screw on bottom of cabinet slightly; then push forward on this screw to disengage AC line cord interlock.
4. Remove screw from bottom of cabinet. Front panel and attached PC board can now be removed from cabinet.
5. For PC board installation reverse the above procedure.

### FRONT PANEL REMOVAL

1. Remove front panel and attached PC board as described under PRINTED BOARD REMOVAL.
2. Unsolder red and blue leads from audio output transformer (transformer is mounted on speaker).
3. Remove the screw securing loop antenna assembly to front panel.
4. Remove two screws attaching PC board stiffener bracket to front panel.
5. For front panel installation * reverse the above procedure.
   * NOTE: The tuning knob must be replaced before PC board assembly is attached to front panel.

NOTES:
1. ALL VOLTAGES MEASURED FROM COMMON NEGATIVE USING A V.T.V.M. VOLUME CONTROL AT MINIMUM, TUNING CAPACITOR AT MAXIMUM LINE VOLTAGE SET AT 117V. A.C. READINGS SHOULD BE AS SHOWN ± 20%.
2. ALL CAPACITANCE VALUES IN MFD. AND ALL RESISTANCE VALUES IN OHMS UNLESS OTHERWISE SPECIFIED.

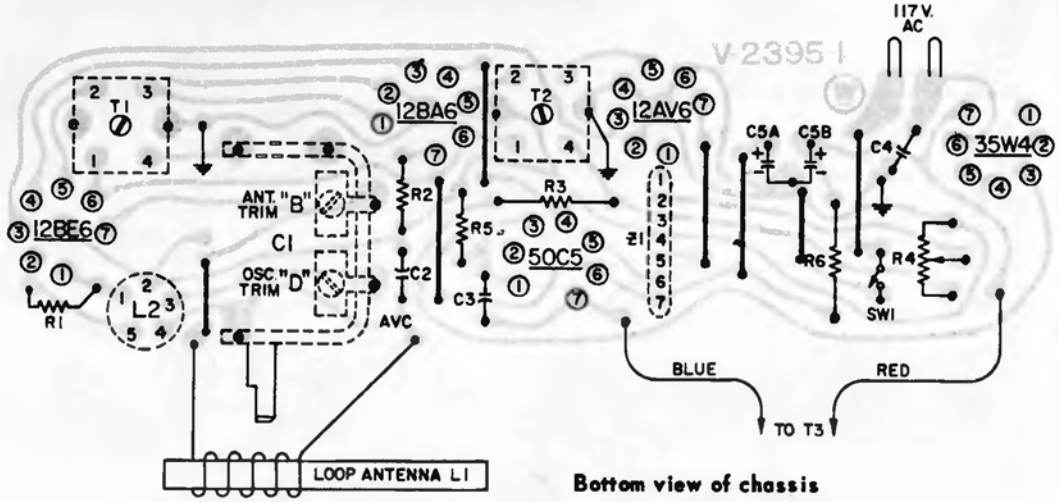


Bottom view of chassis

## WESTINGHOUSE Chassis V-2396-1
## Models H-685P8, H-686P8

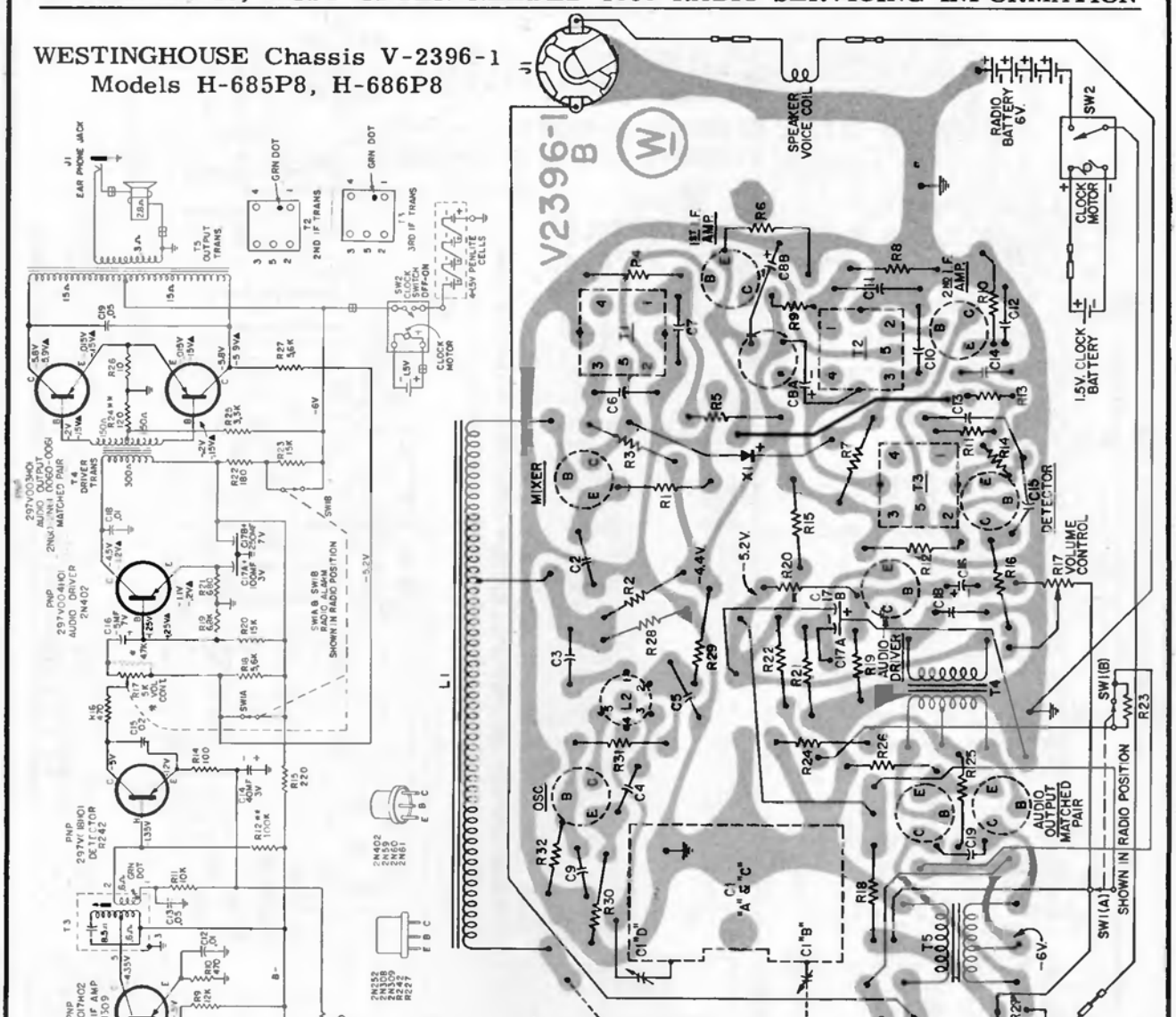


Bottom view of printed circuit board with components shown symbolically.

### CHASSIS REMOVAL

1. Remove the screw located in the center of the cabinet rear. Remove the two screws on the underside of the cabinet.
2. Separate the cabinet front from the cabinet back to expose the radio chassis for servicing. If it is necessary to have complete access to all the components then proceed with steps 3 through 7.
3. Remove the three 1¾" hex head screws which mount the printed circuit board to the cabinet front (through fiber stand-offs).
4. Unsolder the black wire going from the radio battery holder contact (under clock case) to the printed circuit board chassis ground at the printed circuit board connection.
5. Remove the spade connector leads from the speaker, clock battery contact (positive side) and the printed circuit board terminal next to the audio output transformer (T5).
6. Remove the tuning knob and dial as follows. Slip a loop of string under the tuning dial and pull the dial and tuning knob up and out of the cabinet front.
7. Separate the printed circuit board chassis from the cabinet front. To operate the chassis it will be necessary to reconnect the speaker and radio battery leads.

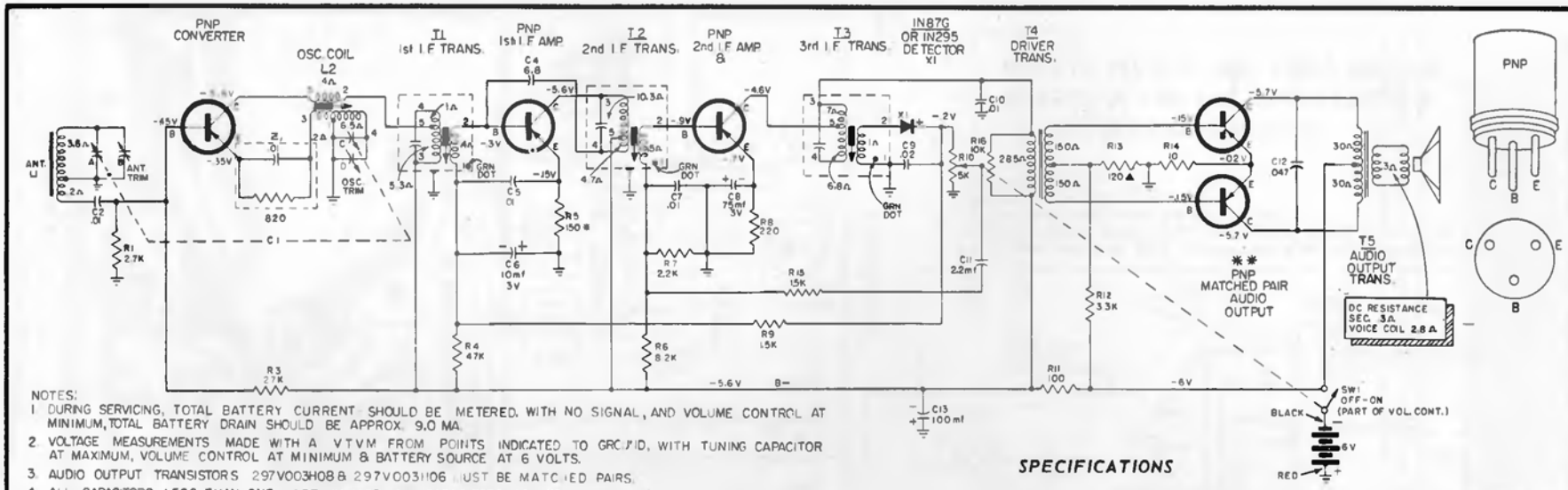


NOTES:

1. DURING SERVICING, TOTAL BATTERY CURRENT SHOULD BE METERED. WITH NO SIGNAL, AND VOLUME CONTROL AT MINIMUM, TOTAL BATTERY DRAIN SHOULD BE APPROX. 9.0 MA.
2. VOLTAGE MEASUREMENTS MADE WITH A VTVM FROM POINTS INDICATED TO GROUND, WITH TUNING CAPACITOR AT MAXIMUM, VOLUME CONTROL AT MINIMUM & BATTERY SOURCE AT 6 VOLTS.
3. AUDIO OUTPUT TRANSISTORS 297V003H08 & 297V003H06 MUST BE MATCHED PAIRS.
4. ALL CAPACITORS LESS THAN ONE ARE IN MFD, ALL CAPACITORS GREATER THAN ONE ARE IN MMFD. UNLESS OTHERWISE SPECIFIED. ALL RESISTORS ARE IN OHMS, ½ WATT.




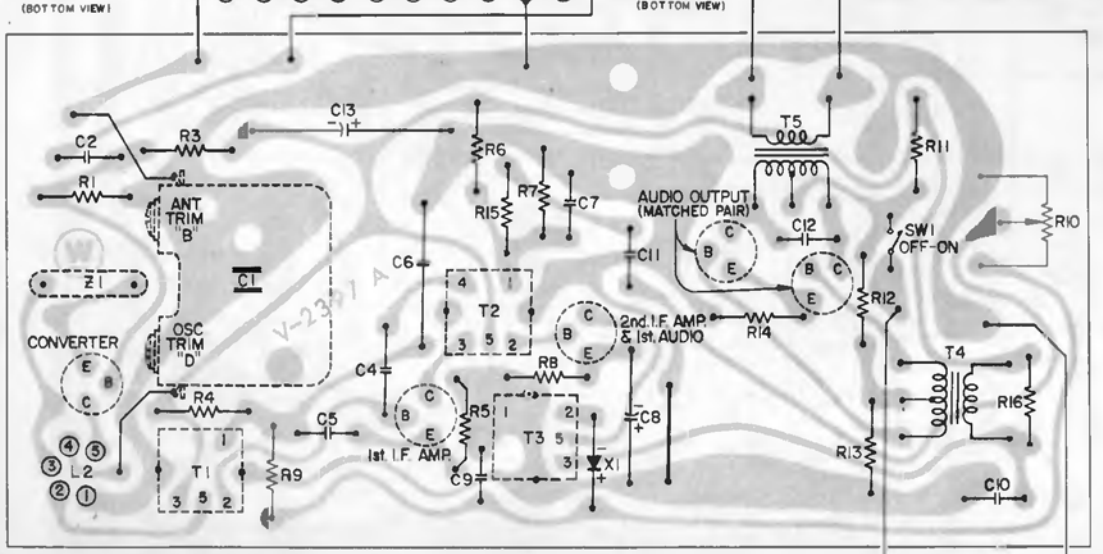


Bottom view of printed circuit board with components shown symbolically

## SPECIFICATIONS

Frequency Range . . . . . 540 to 1600 KC
Intermediate Frequency . . . . . 455 KC
Power Supply—6 volts (four 1.5 volt "C" batteries)
No Signal Current Drain . . . . . 9 ma

## CHASSIS REMOVAL

1. Remove the volume control knob.
2. Remove the tuning control knob. Insert a loop of string under the tuning knob and pull the knob out of the cabinet front.
3. Remove the phillips head screw in the tuning control knob well.
4. Remove the back cover (loosen the two coin-slot screws).
5. Remove the two hex head screws securing the chassis to the cabinet.
6. Remove the chassis, with its battery holder, from the cabinet. The receiver can now be serviced. If it is necessary to also remove the speaker, then remove the two hex head screws securing the speaker and lift it out of its slot.
7. Use the reverse of the above steps to replace the chassis into the cabinet. If replaced, the mounting screw that is used in the tuning control knob well must be the same length as the original, so as to not damage the tuning capacitor.

**Westinghouse®**

Model H-690P5, Chassis V-2397-1

## WESTINGHOUSE
## V-2502-5 AM-FM Tuner Chassis used in Models HR102S, HR103S.

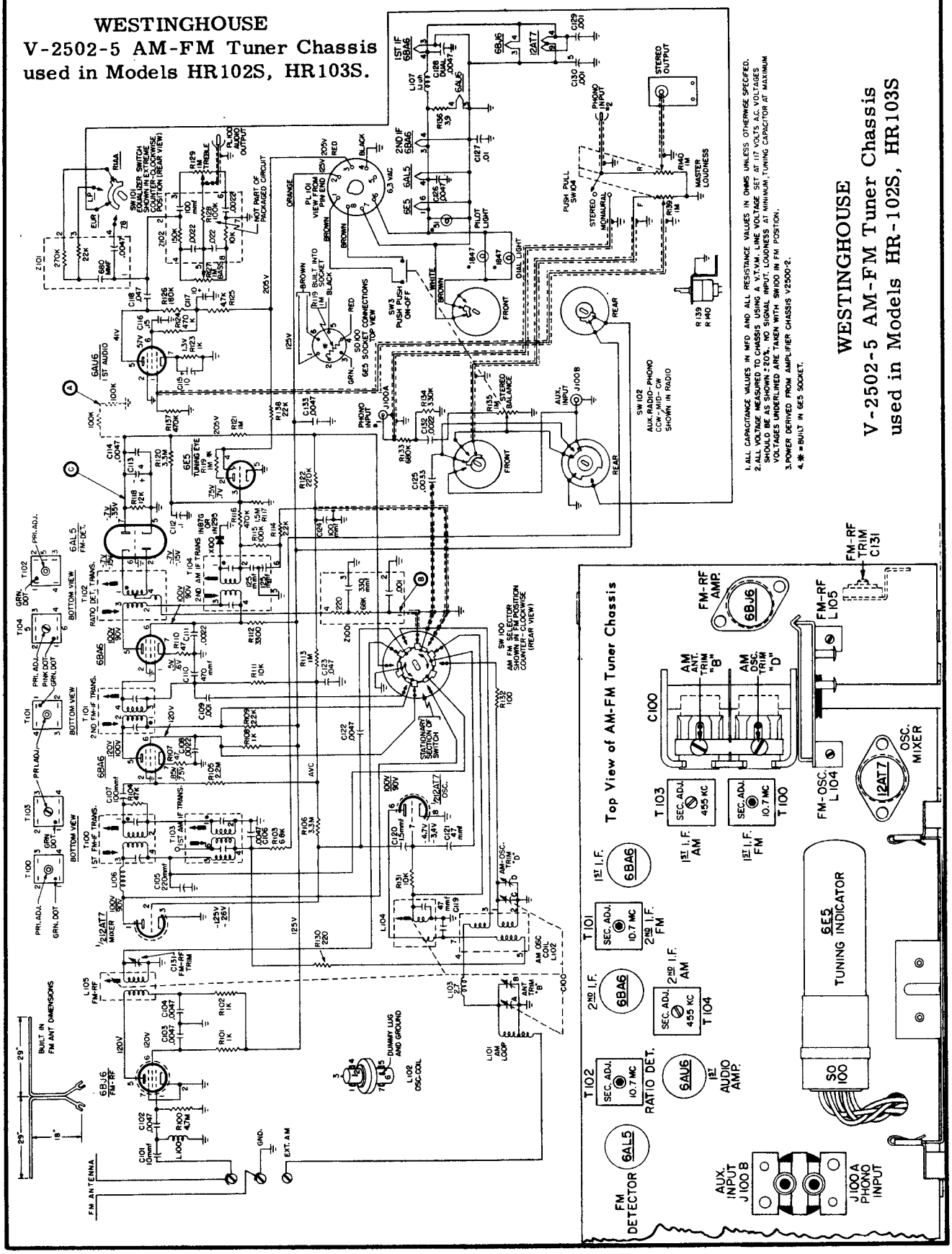

# Westinghouse

Models HF-110AN, HF-111AN,
Chassis V-2503-2

1. ALL CAPACITANCE VALUES IN MFD AND ALL RESISTANCE VALUES IN OHMS UNLESS OTHERWISE SPECIFIED.
2. ALL VOLTAGES MEASURED TO B-USING A VTVM., LINE VOLTAGE SET AT 117VAC, VOLTAGES SHOULD BE AS SHOWN ±20%. NO SIGNAL INPUT, LOUDNESS AT MINIMUM.

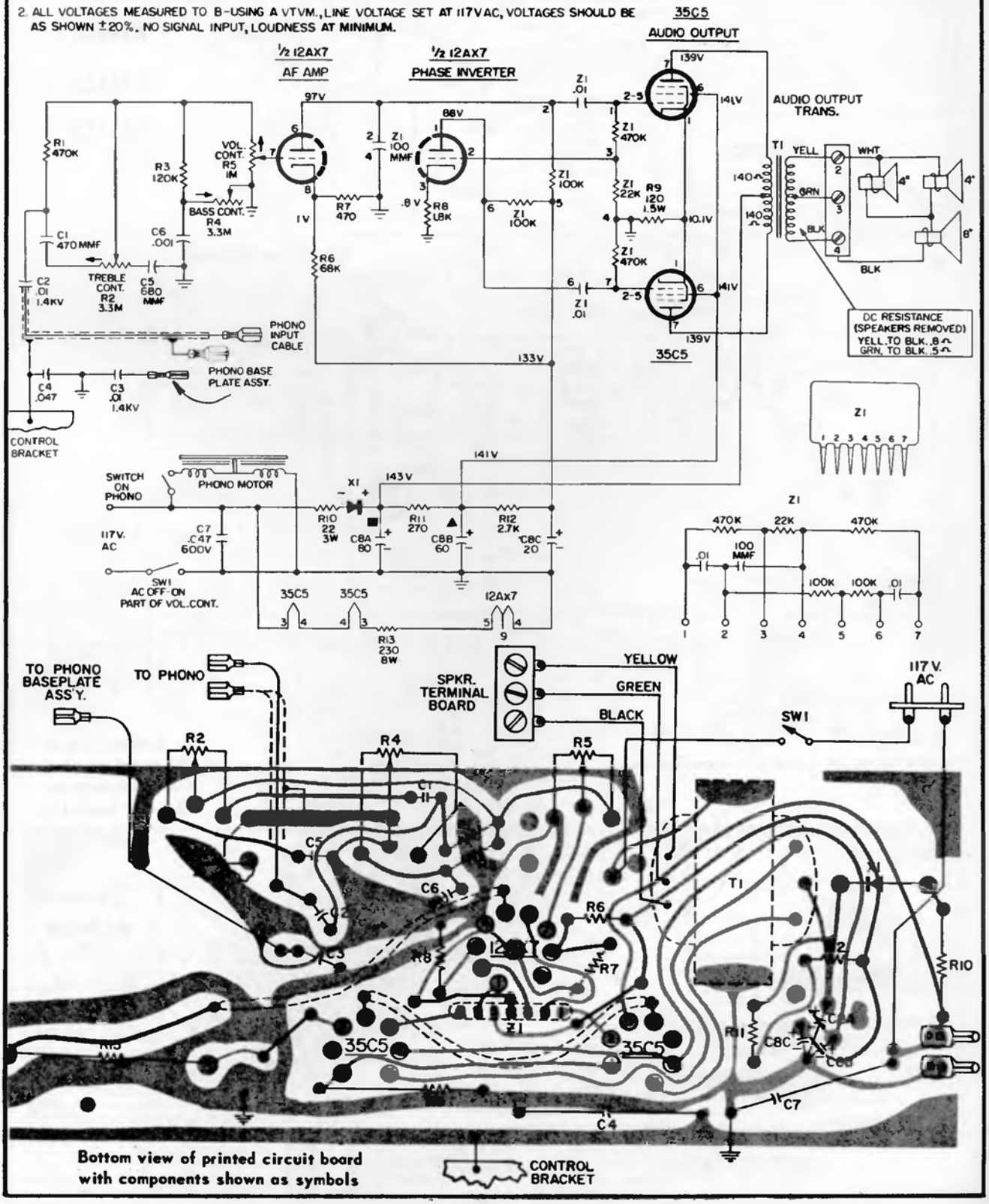


Bottom view of printed circuit board with components shown as symbols

# Westinghouse

## CHASSIS V-2503-3

**MODELS**

**H46AC1**

**H46AC2**

**H46AC3**

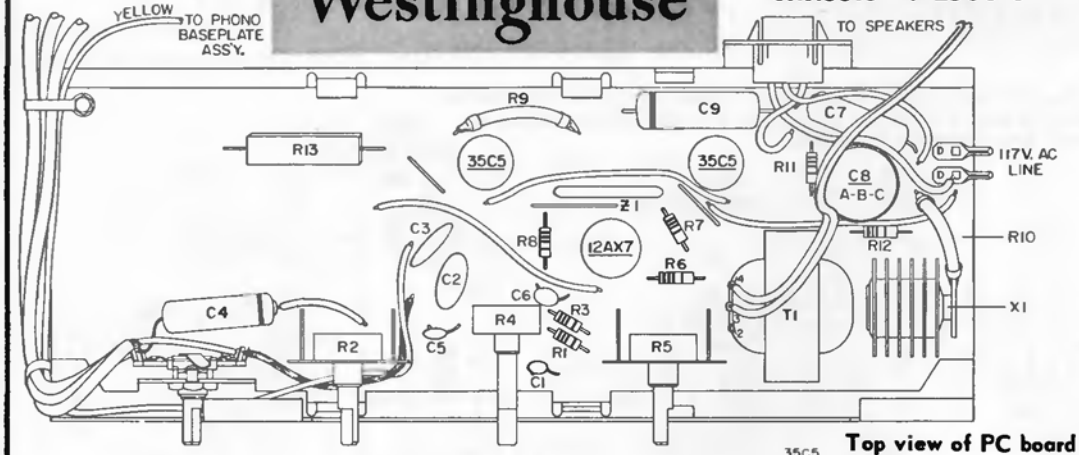


Top view of PC board.

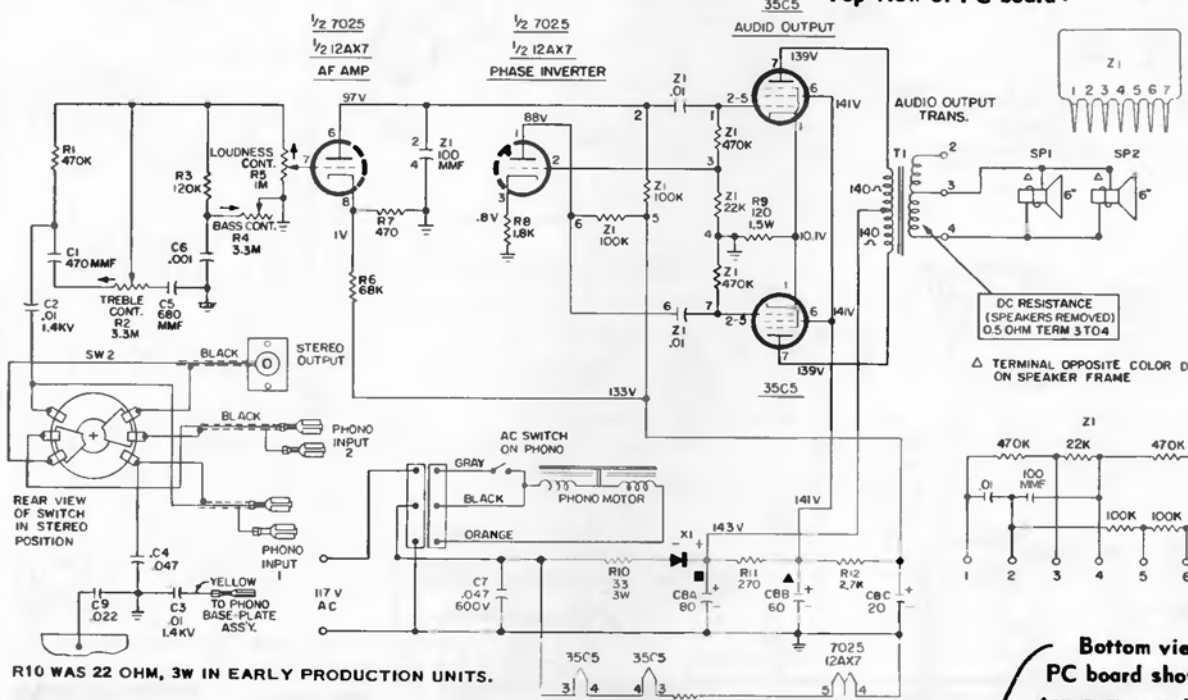


R10 WAS 22 OHM, 3W IN EARLY PRODUCTION UNITS.

Bottom view of PC board showing top components as schematic symbols.

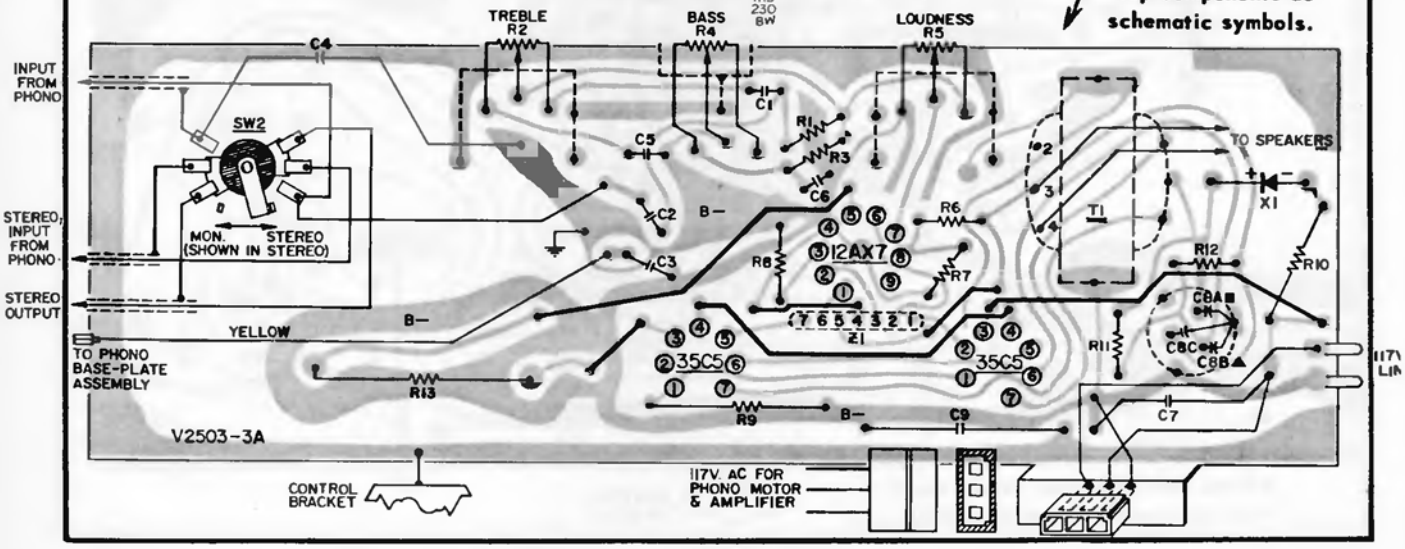

# Westinghouse

## Models H-45AC1A, H-45AC2A, Chassis V-2506-3

### TUBE REPLACEMENT

To replace the vacuum tubes it is first necessary to remove the cover at the rear of the speaker baffle. This cover has ventilating holes and is secured by two phillips-head screws.

### CHASSIS REMOVAL

1. Remove the cover at the rear of the speaker baffle. This cover has ventilating holes and is secured by two phillips-head screws.
2. Remove the record changer mounting board. This is secured by four phillips-head screws, one in each corner of the board. Lift the board up and out of the cabinet. To completely detach the changer from the phonograph remove the two cable plugs from the sockets on the amplifier chassis.
3. Remove the three 3/8" speed nuts from the bolts extending in from the cabinet front.
4. Tilt the cabinet front (with grille cloth) forward and remove from the cabinet. The amplifier chassis is mounted on the cabinet front.

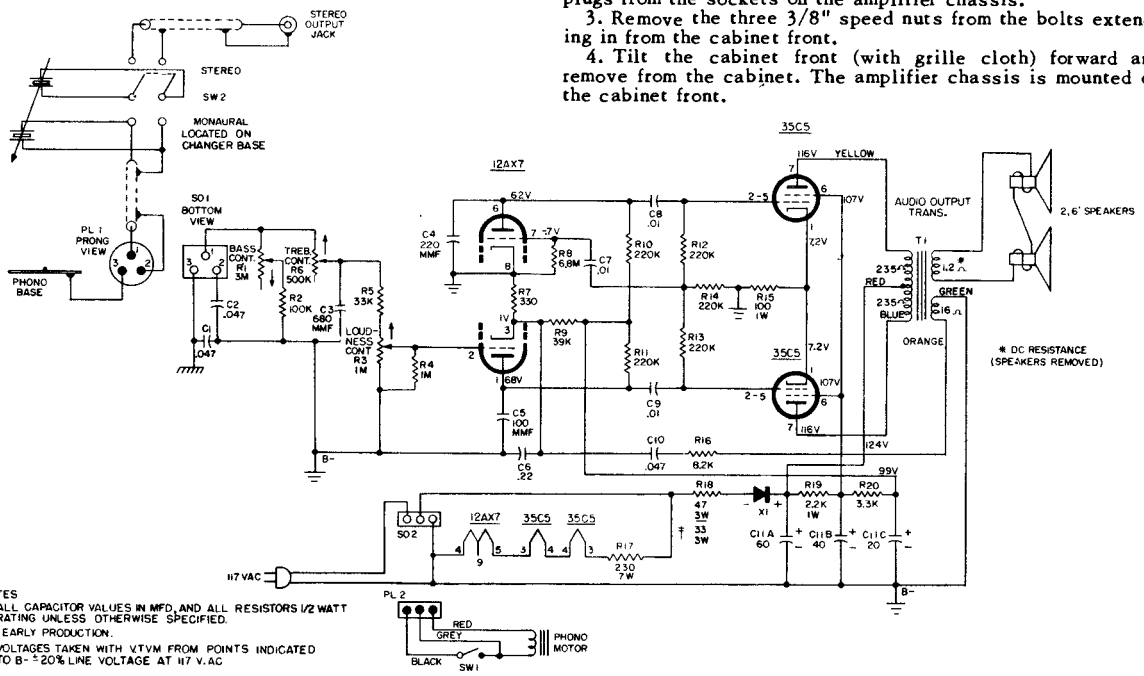


NOTES
1. ALL CAPACITOR VALUES IN MFD, AND ALL RESISTORS 1/2 WATT RATING UNLESS OTHERWISE SPECIFIED.
2. + EARLY PRODUCTION.
3. VOLTAGES TAKEN WITH V.T.V.M. FROM POINTS INDICATED TO B- ±20% LINE VOLTAGE AT 117 V.AC

## WESTINGHOUSE Models H-44AC1A, H-44AC2A, Chassis V-2506-2.

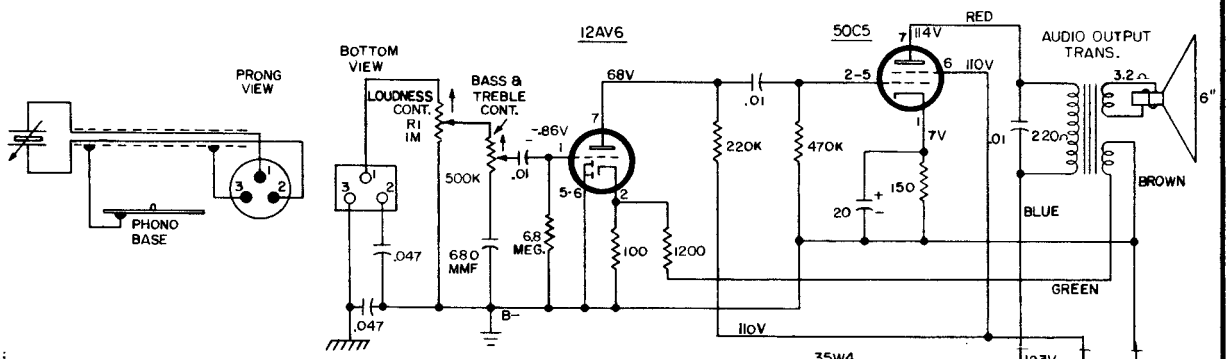


NOTE:
1. ALL CAPACITOR VALUES IN MFD, AND ALL RESISTORS IN OHMS 1/2 WATT RATING UNLESS OTHERWISE SPECIFIED.
2. VOLTAGES TAKEN WITH V.T.V.M. FROM POINTS INDICATED TO B- ±20% LINE VOLTAGE AT 117 V.A.C

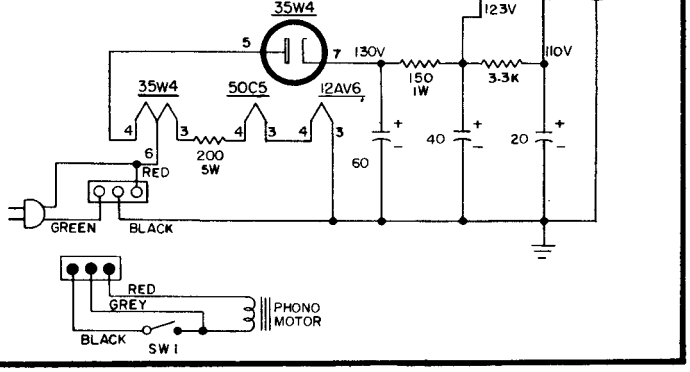


### CHASSIS REMOVAL

1. Remove the cover at the rear of the speaker baffle. This cover has ventilating holes and is secured by two phillips-head screws.
2. Remove the record changer mounting board. This is secured by four phillips-head screws, one in each corner of the board. Lift the board up and out of the cabinet. To completely detach the changer from the phonograph remove the two cable plugs from the sockets on the amplifier chassis.
3. Remove the three 3/8" speed nuts from the bolts extending in from the cabinet front.
4. Tilt the cabinet front (with grille cloth) forward and remove from the cabinet. The amplifier chassis is mounted on the cabinet front.

# Westinghouse

**MODELS**

| | |
|---|---|
| **H48SE1** | *(mahogany)* |
| **H48SE2** | *(oak)* |
| **H48SE3** | *(fruitwood)* |
| **H48SE4** | *(walnut)* |
| **H48SE5** | *(tutone)* |

**CHASSIS V-2503-5**

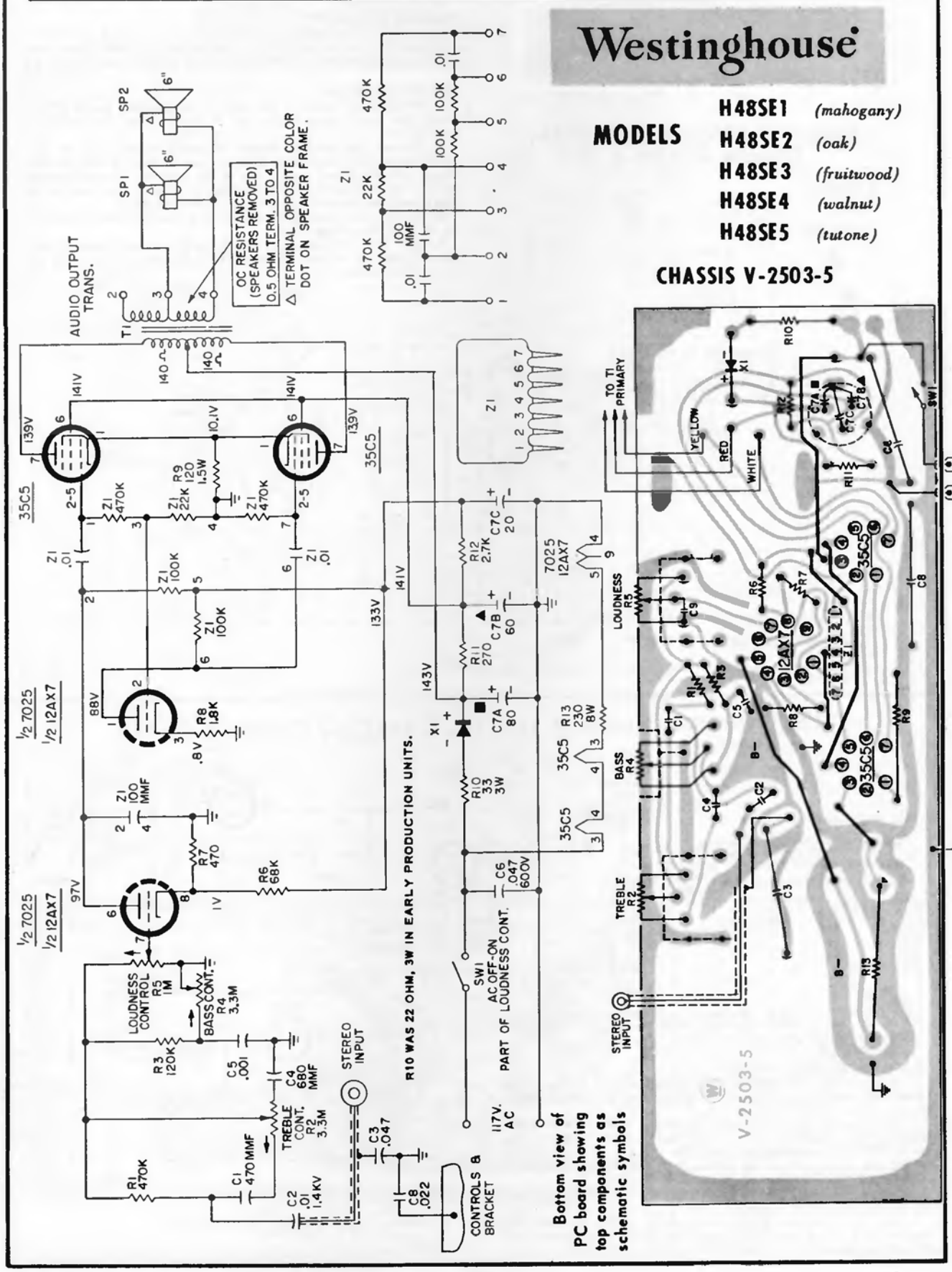


Bottom view of PC board showing top components as schematic symbols

# ZENITH RADIO MODELS HF110G & J CHASSIS 3Z04

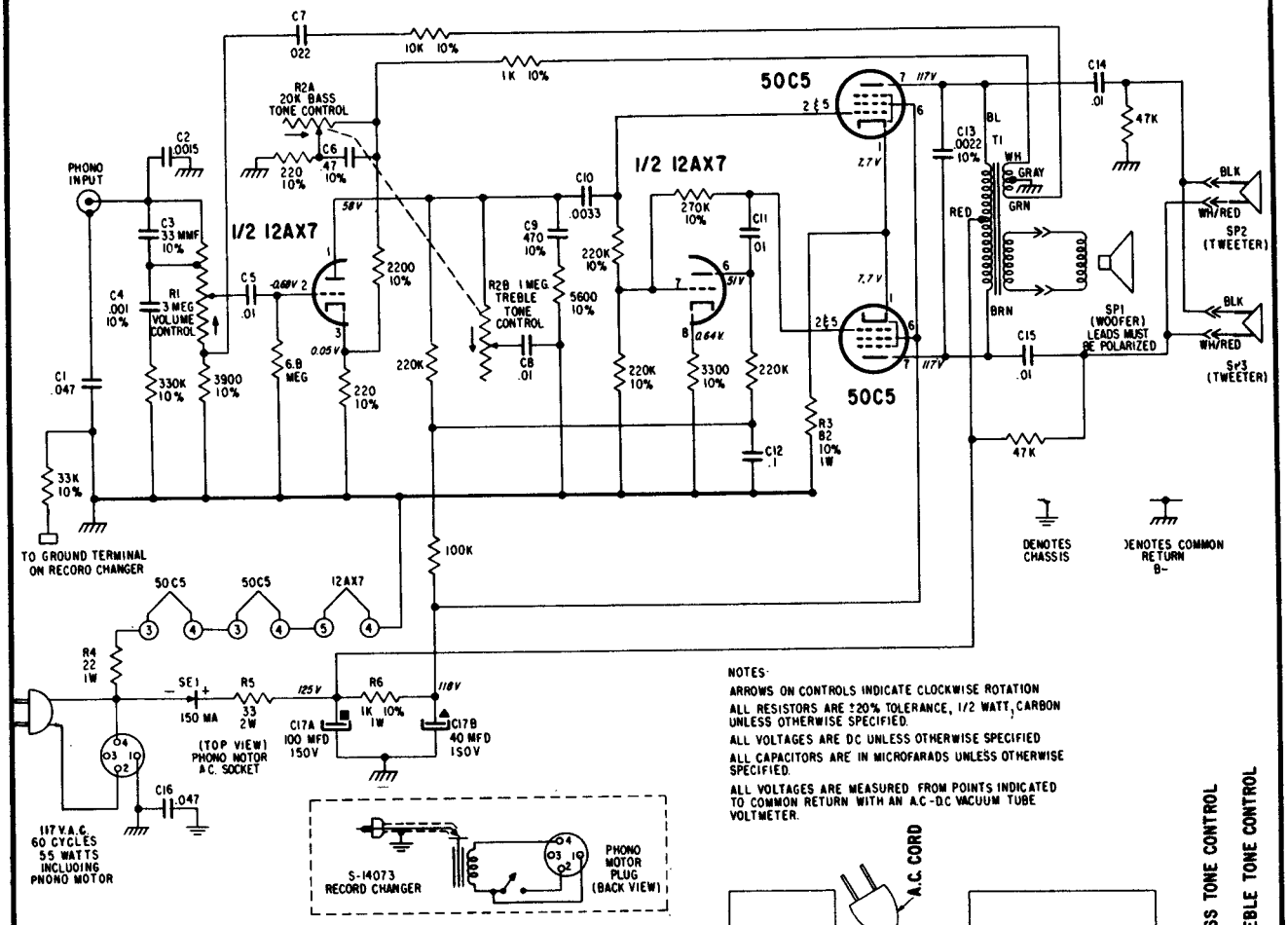


NOTES-

ARROWS ON CONTROLS INDICATE CLOCKWISE ROTATION

ALL RESISTORS ARE ±20% TOLERANCE, 1/2 WATT, CARBON UNLESS OTHERWISE SPECIFIED.

ALL VOLTAGES ARE DC UNLESS OTHERWISE SPECIFIED

ALL CAPACITORS ARE IN MICROFARADS UNLESS OTHERWISE SPECIFIED.

ALL VOLTAGES ARE MEASURED FROM POINTS INDICATED TO COMMON RETURN WITH AN A.C.-D.C VACUUM TUBE VOLTMETER.

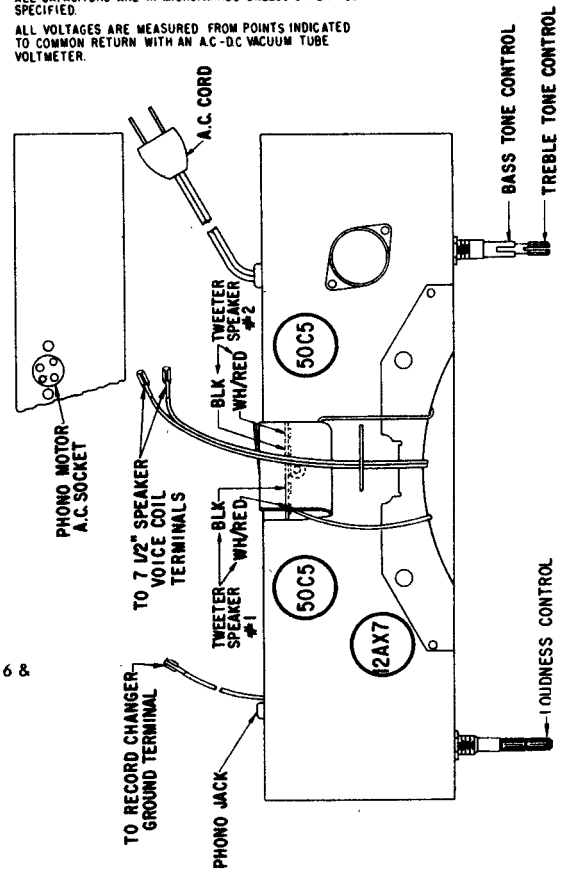


## MODELS HF110, G & J CABINET PARTS
### Using Chassis 3Z04

| PART NO. | DIA. ND. | DESCRIPTION |
|---|---|---|
| 14-2405G | | Table Cabinet - Model HF110G |
| 14-2405J | | Table Cabinet - Model HF110J |
| 19-298 | | Mounting Clip (mts. S-41437) |
| 24-923 | | Chassis Cover - Model HF110J |
| 24-924 | | Chassis Cover - Model HF110G |
| 36-210 | | Cabinet Handle (part of 14-2405G) |
| 36-211 | | Cabinet Handle (part of 14-2405J) |
| 40-157 | | Lid Support Hinge (part of 14-2405, G & J) |
| 40-189 | | Hinge (2 part of 14-2405 G & J) |
| 46-1318 | | Knob - Volume & Tone HF110J |
| 46-2001 | | Knob - Volume & Tone HF110G |
| 49-795 | SP1 | 7½" P.M. Speaker |
| 83-765 | | Armite strip (2 used) |
| 83-1475 | | Armite strip |
| 83-2535 | | Phono Shipping Strip (2 used) |
| 83-2761 | | Phono Shipping Strip |
| 86-254 | | Terminal (4 used) |
| 93-1173 | | 6 Finishing Washer (1 used on ea. 70-239) |
| 93-1260 | | Fibre Washer (2 part of S-14083) |
| 142-87 | | Dual Cartridge (Sapphire-Sapphire) |
| 156-45 | | Cover Latch (2 part of 14-2405J) |
| 159-94 | | Plug Button (4 used on 14-2405G & J) |
| 159-95 | | Plug Button Screen (2 used on 14-2405 G & J) |
| 166-114 | | Plastic Bumper (4 part of 14-2405 G & J) |
| 188-102 | | Knob Retaining Ring (1 part of ea. S-43478, 43479, 44126 & 44127) |
| 188-195 | | Retaining Ring (2 part of S-14083) |
| 202-1362 | | Instruction Book |
| S-14083 | | Record Changer |
| S-23829 | SP2, 3 | Tweeter Speaker (2 used) |
| S-41437 | | 45 RPM Record Adapter |
| S-42308 | | Cartridge Holder (part of S-14083) |
| S-43478 | | Knob & Ring Assem. |
| S-43479 | | Knob & Ring Assem. |
| S-44126 | | Knob Ring Assem. Tone HF110G |
| S-44127 | | Knob & Ring Assem. Dummy HF110G |

# ZENITH RADIO CORP. MODELS SF174R & SF177E & R

## CHASSIS 4B22, 4B23,3B30

(Continued on page 171)

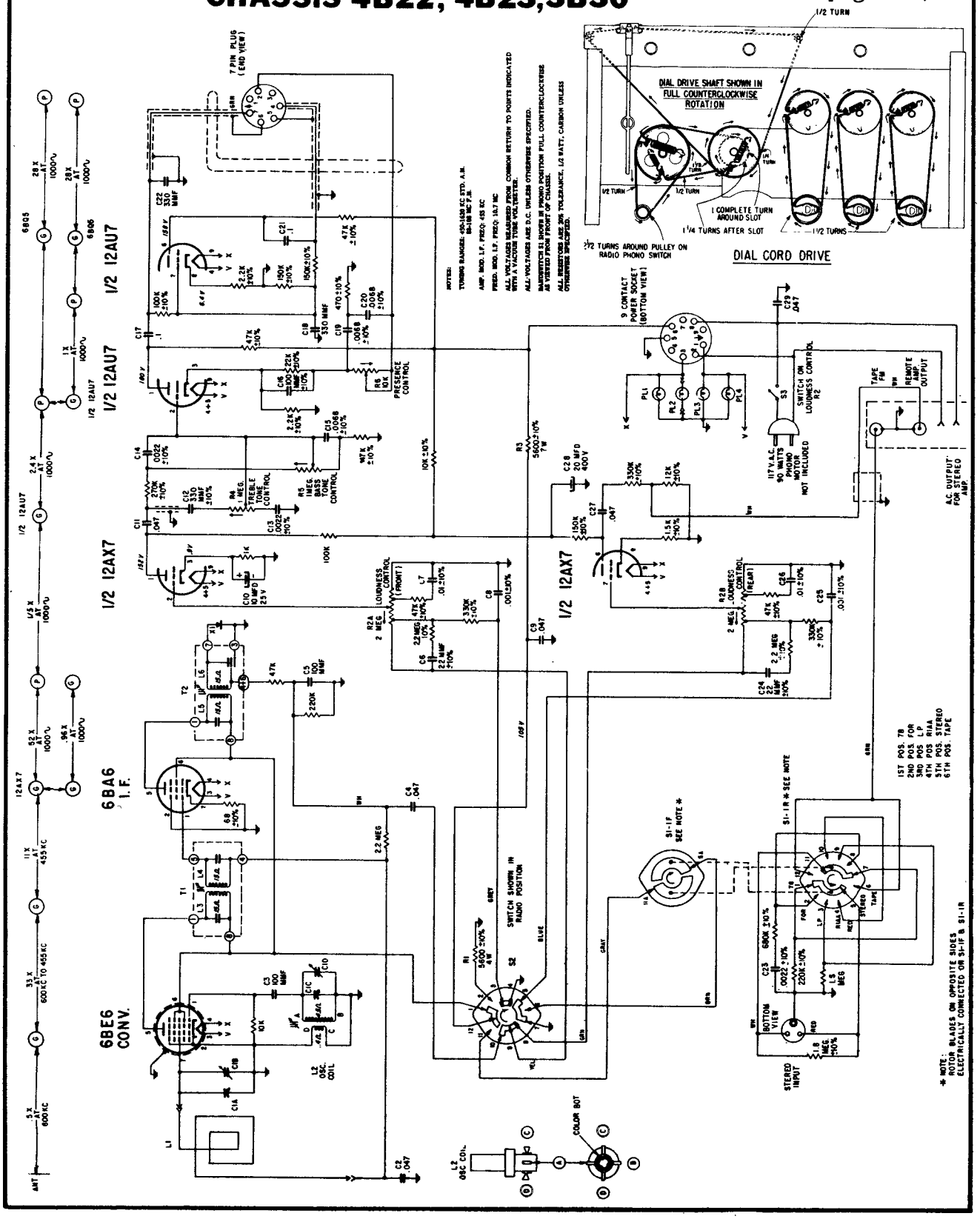

# ZENITH RADIO CORP. MODELS SF174R & SF177E & R

## CHASSIS 4B22, 4B23,3B30

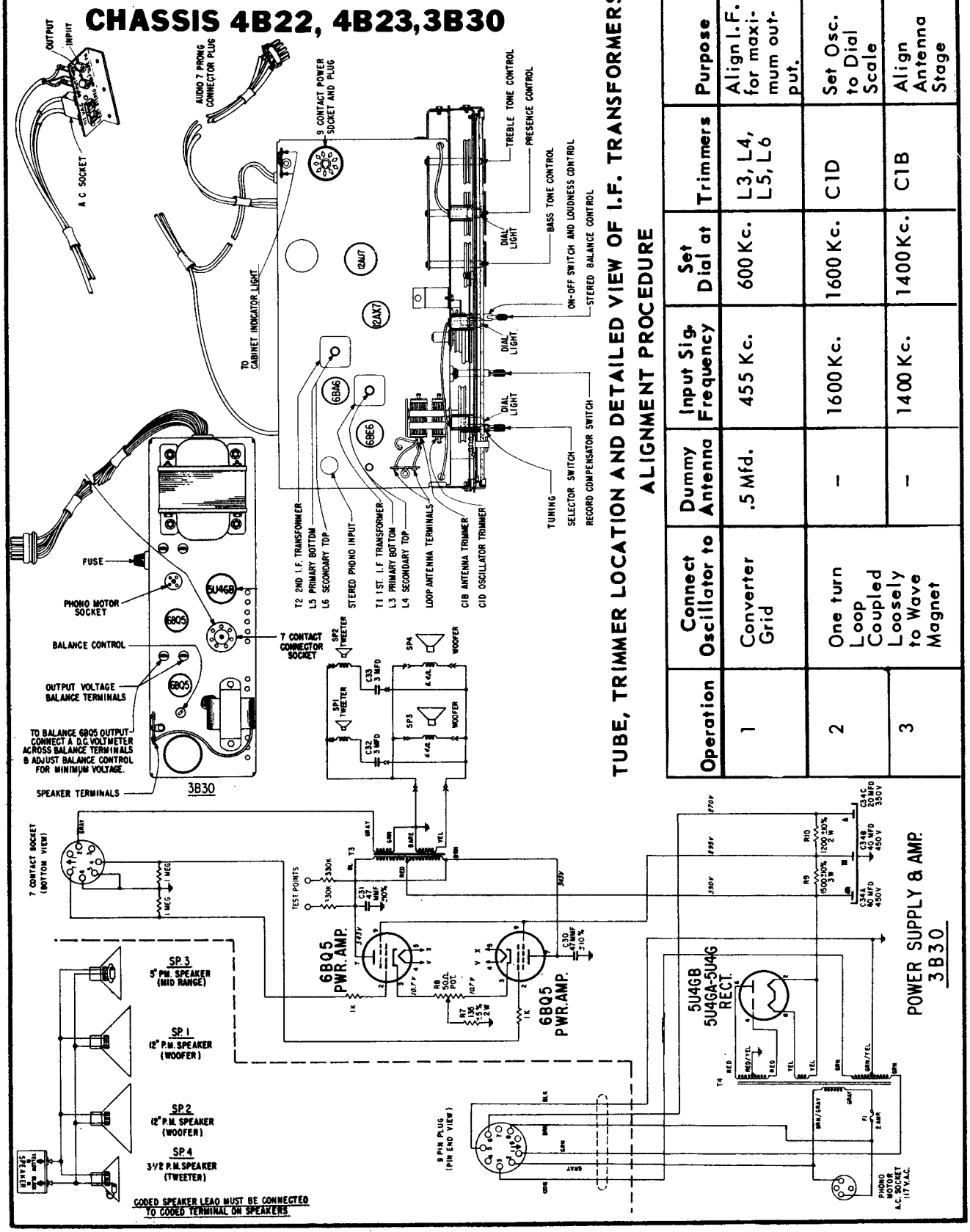


## TUBE, TRIMMER LOCATION AND DETAILED VIEW OF I.F. TRANSFORMERS

### ALIGNMENT PROCEDURE

| Operation | Connect Oscillator to | Dummy Antenna | Input Sig. Frequency | Set Dial at | Trimmers | Purpose |
|---|---|---|---|---|---|---|
| 1 | Converter Grid | .5 Mfd. | 455 Kc. | 600 Kc. | L3, L4, L5, L6 | Align I.F. for maximum output. |
| 2 | One turn Loop Coupled Loosely to Wave Magnet | – | 1600 Kc. | 1600 Kc. | C1D | Set Osc. to Dial Scale |
| 3 | | – | 1400 Kc. | 1400 Kc. | C1B | Align Antenna Stage |

# ZENITH RADIO CORPORATION MODEL SF112, CHASSIS 4B24—4B25 & REMOTE SPEAKER SRS2

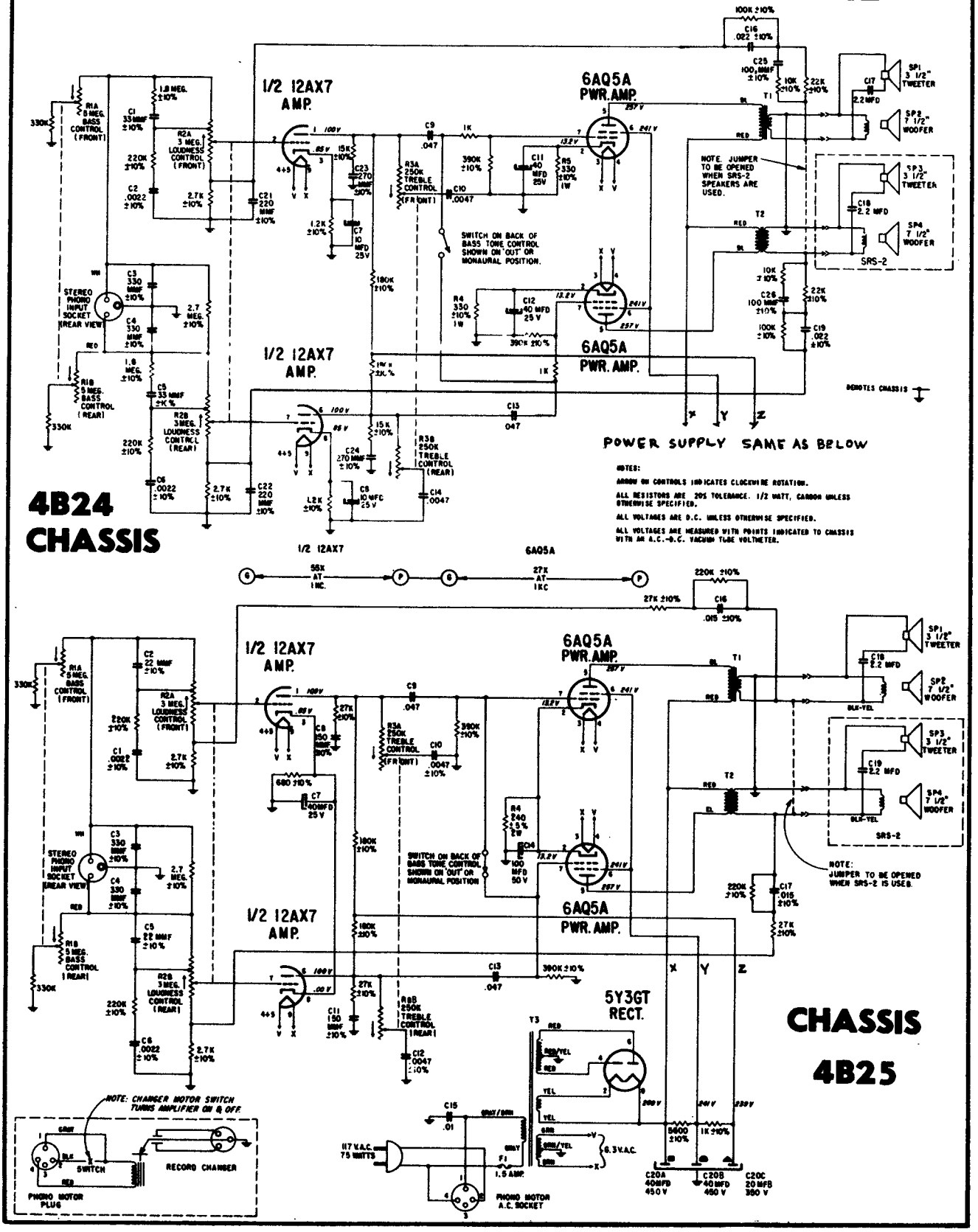

# ZENITH RADIO CORPORATION MODEL B513Y, L, F, V, CHASSIS 5B01

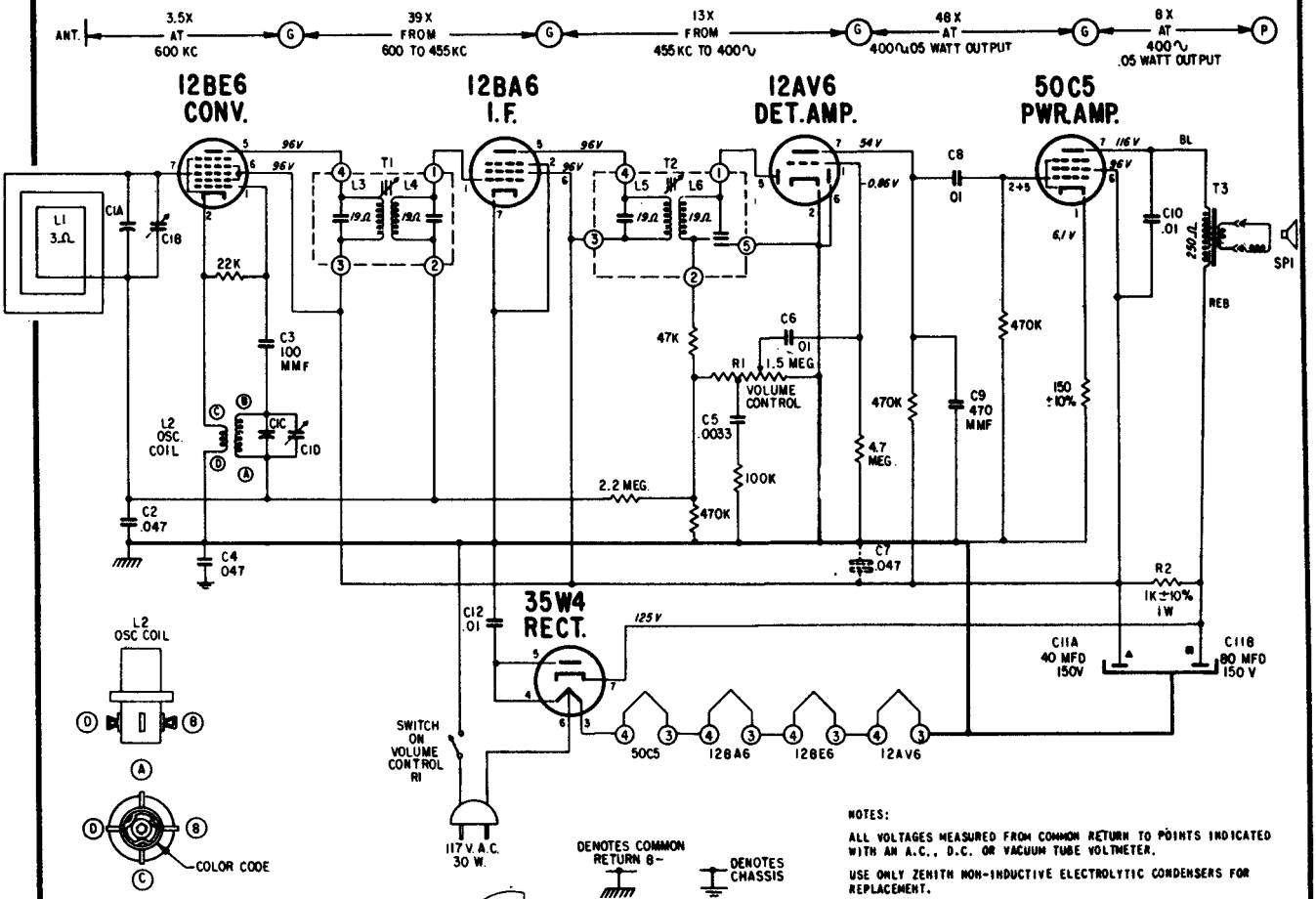


NOTES:

ALL VOLTAGES MEASURED FROM COMMON RETURN TO POINTS INDICATED WITH AN A.C., D.C. OR VACUUM TUBE VOLTMETER.

USE ONLY ZENITH NON-INDUCTIVE ELECTROLYTIC CONDENSERS FOR REPLACEMENT.

IF ANY OTHER TYPE OF ELECTROLYTIC IS USED IT WILL BE NECESSARY TO ADD C7 SHOWN IN DOTTED LINES.

I.F. TRANSFORMER NUMBERING STARTS WITH P1 TERMINAL AS FIRST TERMINAL CLOCKWISE FROM MARKER CODE TERMINAL AS VIEWED FROM BOTTOM OF CHASSIS.

I.F. FREQUENCY 455 KC
TUNING RANGE 535-1620 KC

ALL RESISTORS ±20% TOLERANCE, 1/2 WATT, CARBON UNLESS OTHERWISE SPECIFIED.

The I.F. transformers incorporated in this receiver are of the new permeability tuned type. The advantage of this type is its extreme stability under various humidity and temperature conditions. The upper coil is the secondary and the lower the primary. When adjusting these I.F. transformers, the tuning wrench 68-19 can be inserted into the top slug, rotated until maximum output is obtained and then dropped down to the lower slug and the same operation repeated.

## ALIGNMENT PROCEDURE

| OPERATION | CONNECT OSCILLATOR TO | DUMMY ANTENNA | INPUT SIG. FREQUENCY | SET DIAL AT | TRIMMERS | PURPOSE |
|---|---|---|---|---|---|---|
| 1 | Converter Grid | .5 Mfd. | 455 Kc. | 600 Kc. | L3,L4,L5,L6 | Align I.F. for max. output. |
| 2 | One Turn Loop Coupled Loosely to Wave Magnet. | - | 1600 Kc. | 1600 Kc. | C1D | Set Osc. to Dial Scale. |
| 3 | | - | 1400 Kc. | 1400 Kc. | C1B | Align Antenna Stage. |

# ZENITH RADIO CORP MODELS B514F,W,C,V–B515B,P,G,Y CHASSIS 5B04–5B06

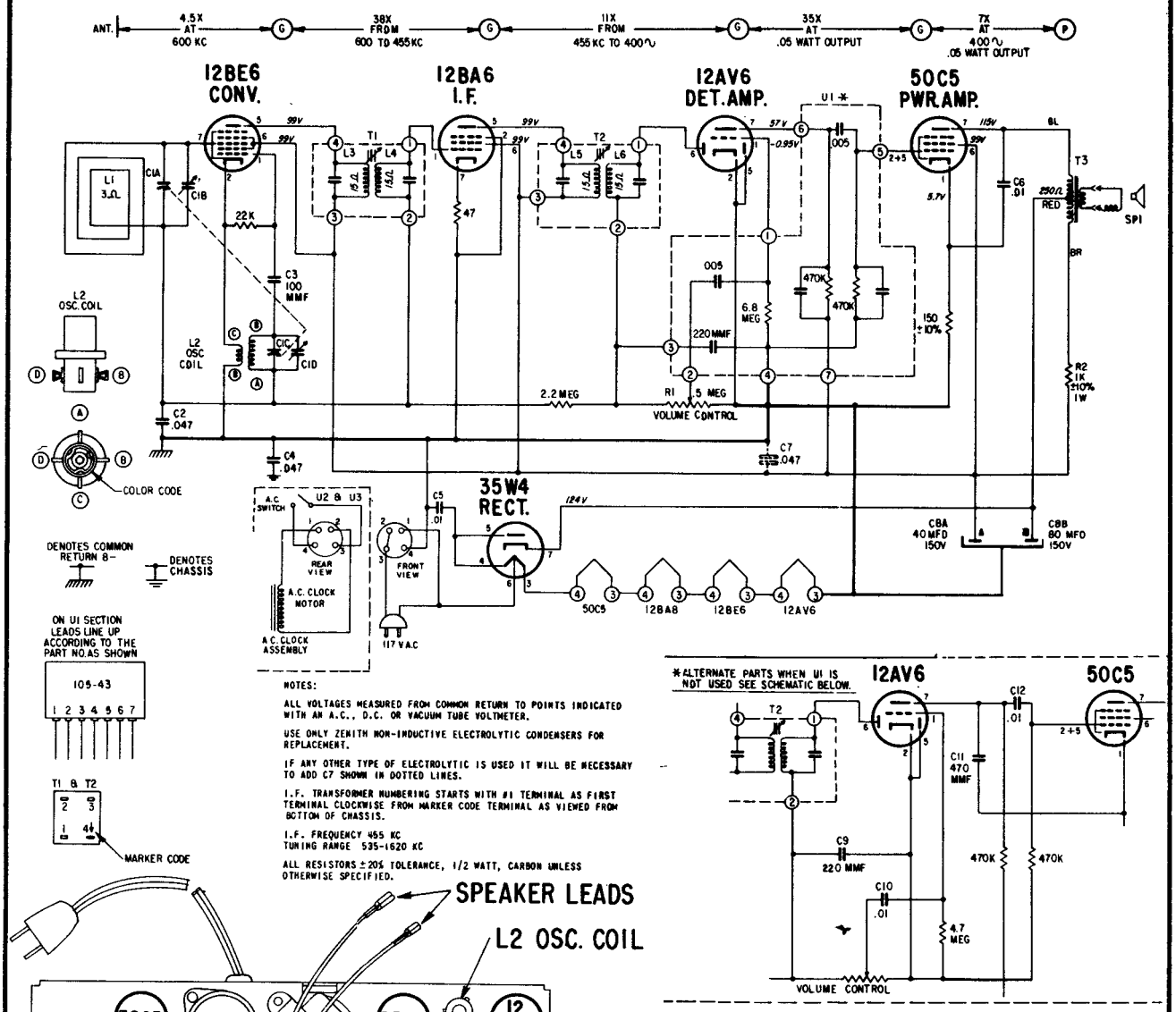


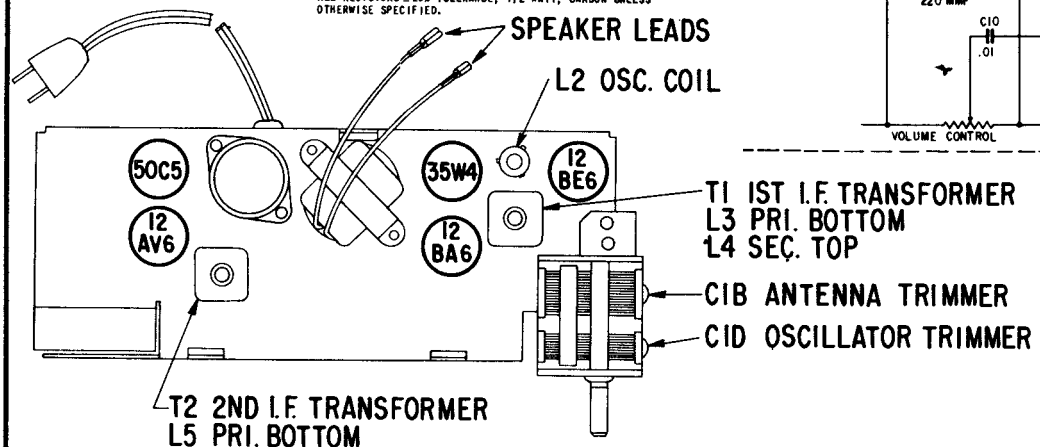


**Alignment Procedure**

| OPERATION | CONNECT OSCILLATOR TO | DUMMY ANTENNA | INPUT SIG. FREQUENCY | SET DIAL AT | TRIMMERS | PURPOSE |
|---|---|---|---|---|---|---|
| 1 | Converter Grid | .5 Mfd. | 455 Kc. | 600 Kc. | L3, 4, 5, 6 | For I.F. Alignment. |
| 2 | One Turn Loop Coupled Loosely to Wave Magnet | — | 1600 Kc. | 1600 Kc. | CID | Set Oscillator to Dial Scale |
| 3 | | — | 1400 Kc. | 1400 Kc. | CIB | Align Antenna Stage |

## ZENITH RADIO CORPORATION MODELS B509C, P, V, F, CHASSIS 5B11.

## MODELS B511 B, P, L, V, CHASSIS 5B10, are electrically the same.

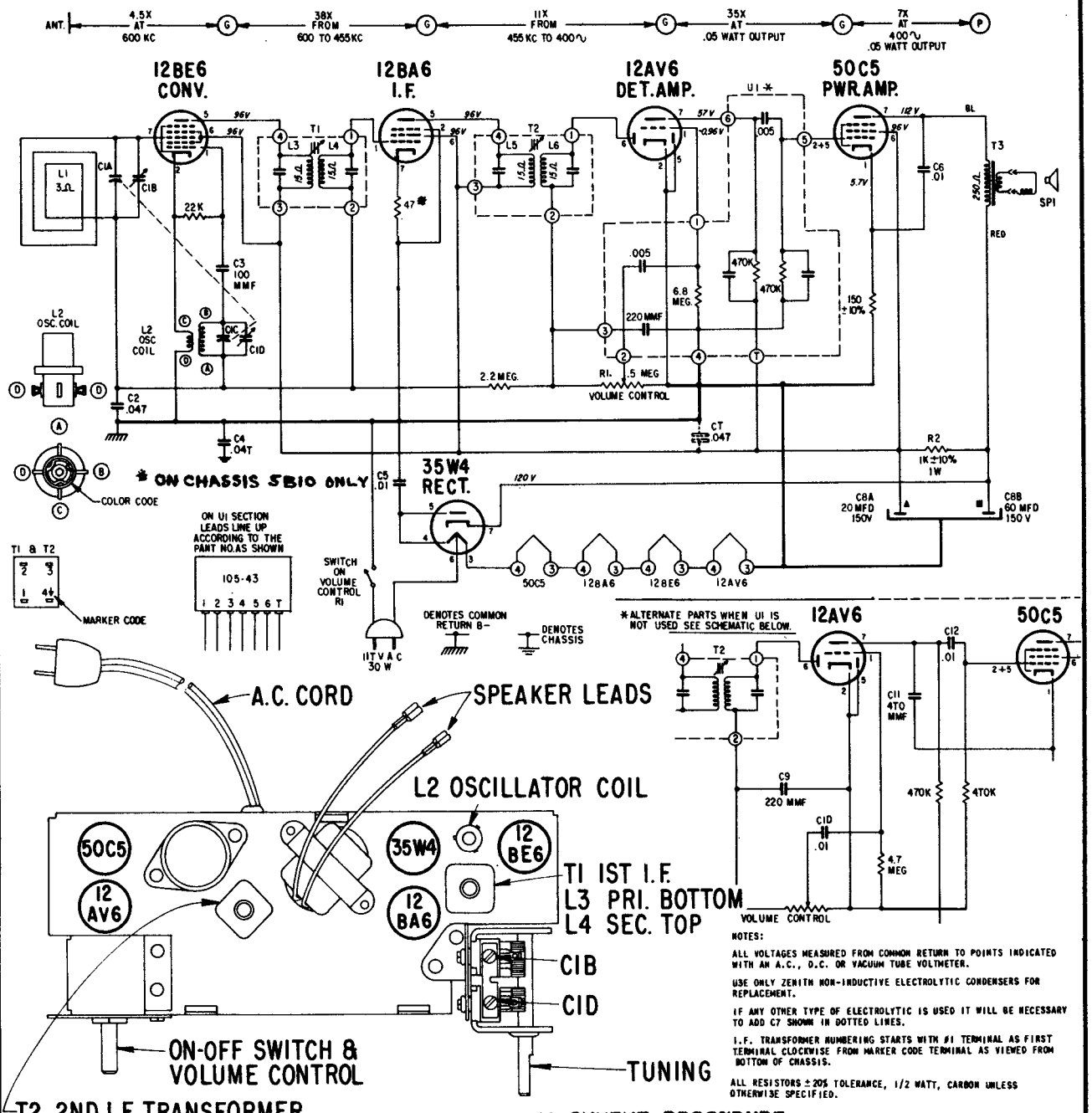


NOTES:

ALL VOLTAGES MEASURED FROM COMMON RETURN TO POINTS INDICATED WITH AN A.C., D.C. OR VACUUM TUBE VOLTMETER.

USE ONLY ZENITH NON-INDUCTIVE ELECTROLYTIC CONDENSERS FOR REPLACEMENT.

IF ANY OTHER TYPE OF ELECTROLYTIC IS USED IT WILL BE NECESSARY TO ADD C7 SHOWN IN DOTTED LINES.

I.F. TRANSFORMER NUMBERING STARTS WITH #1 TERMINAL AS FIRST TERMINAL CLOCKWISE FROM MARKER CODE TERMINAL AS VIEWED FROM BOTTOM OF CHASSIS.

ALL RESISTORS ±20% TOLERANCE, 1/2 WATT, CARBON UNLESS OTHERWISE SPECIFIED.

### ALIGNMENT PROCEDURE

| Operation | Connect Oscillator To | Dummy Antenna | Input Sig. Frequency | Set Dial At | Trimmers | Purpose |
|---|---|---|---|---|---|---|
| 1 | Converter Grid | .5 Mfd. | 455 Kc. | 600 Kc. | L3, L4, L5, L6 | For I.F. Alignment. |
| 2 | One Turn Loop Coupled Loosely to Wave Magnet | — | 1600 Kc. | 1600 Kc. | C1D | Set Oscillator to Dial Scale |
| 3 | | — | 1400 Kc. | 1400 Kc. | C1B | Align Antenna Stage |

# ZENITH RADIO CORPORATION

# MODELS HF116E & HF116R

# CHASSIS 5B20

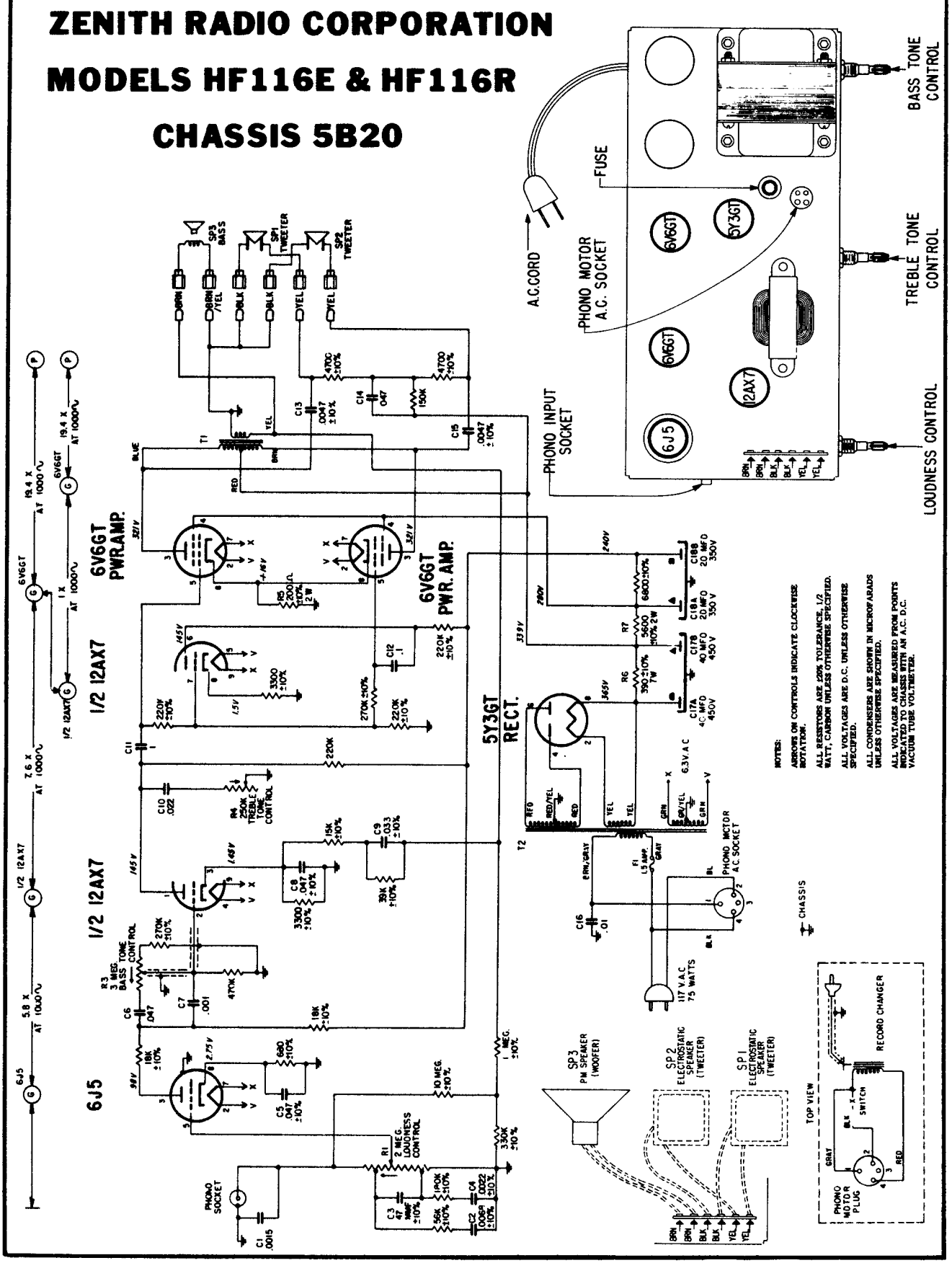

# ZENITH RADIO CORP. MODELS HF117 & HF118

## CHASSIS 5B22

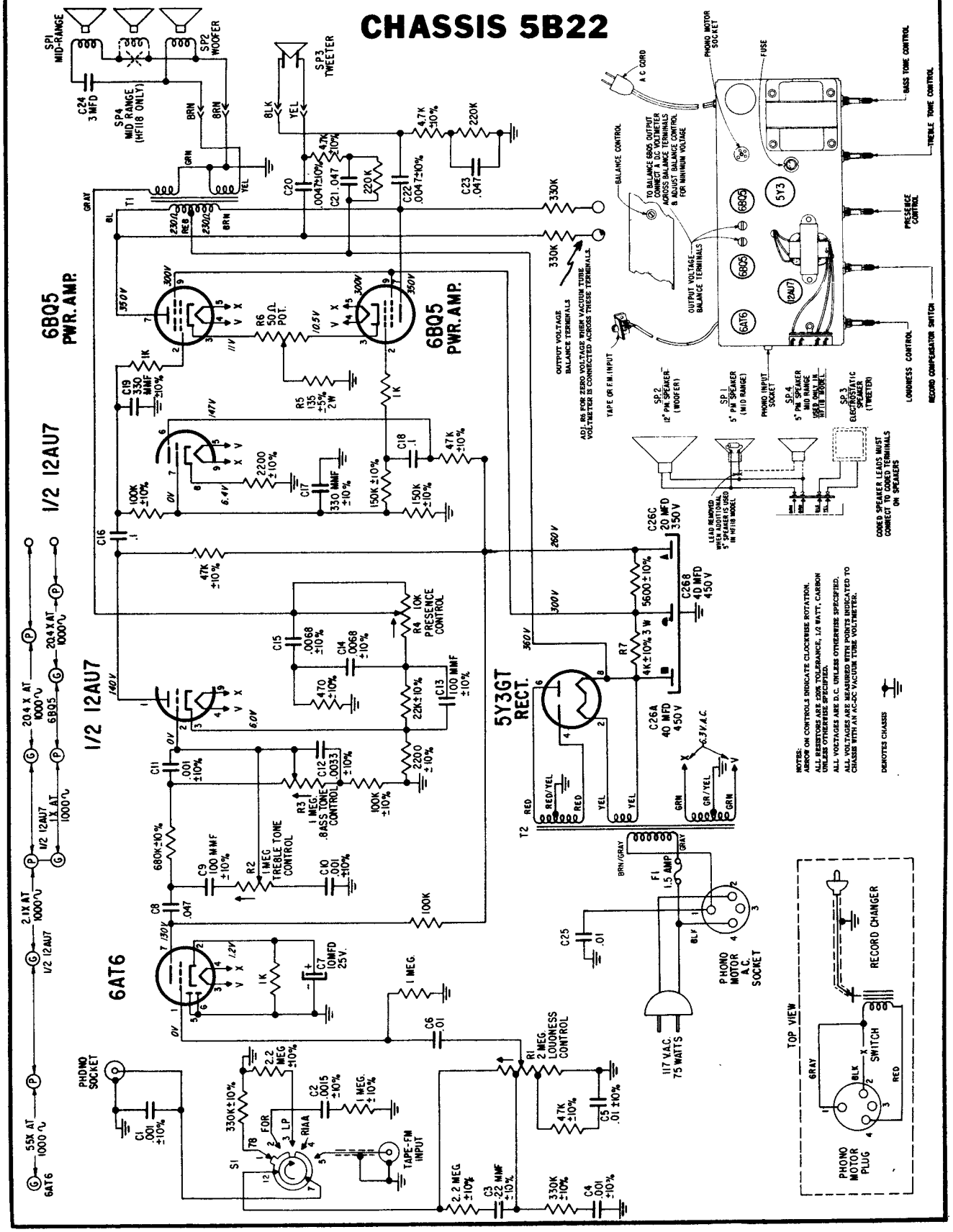

# ZENITH RADIO CORPORATION

## MODELS SRS10 & SRS15

## CHASSIS 5B24

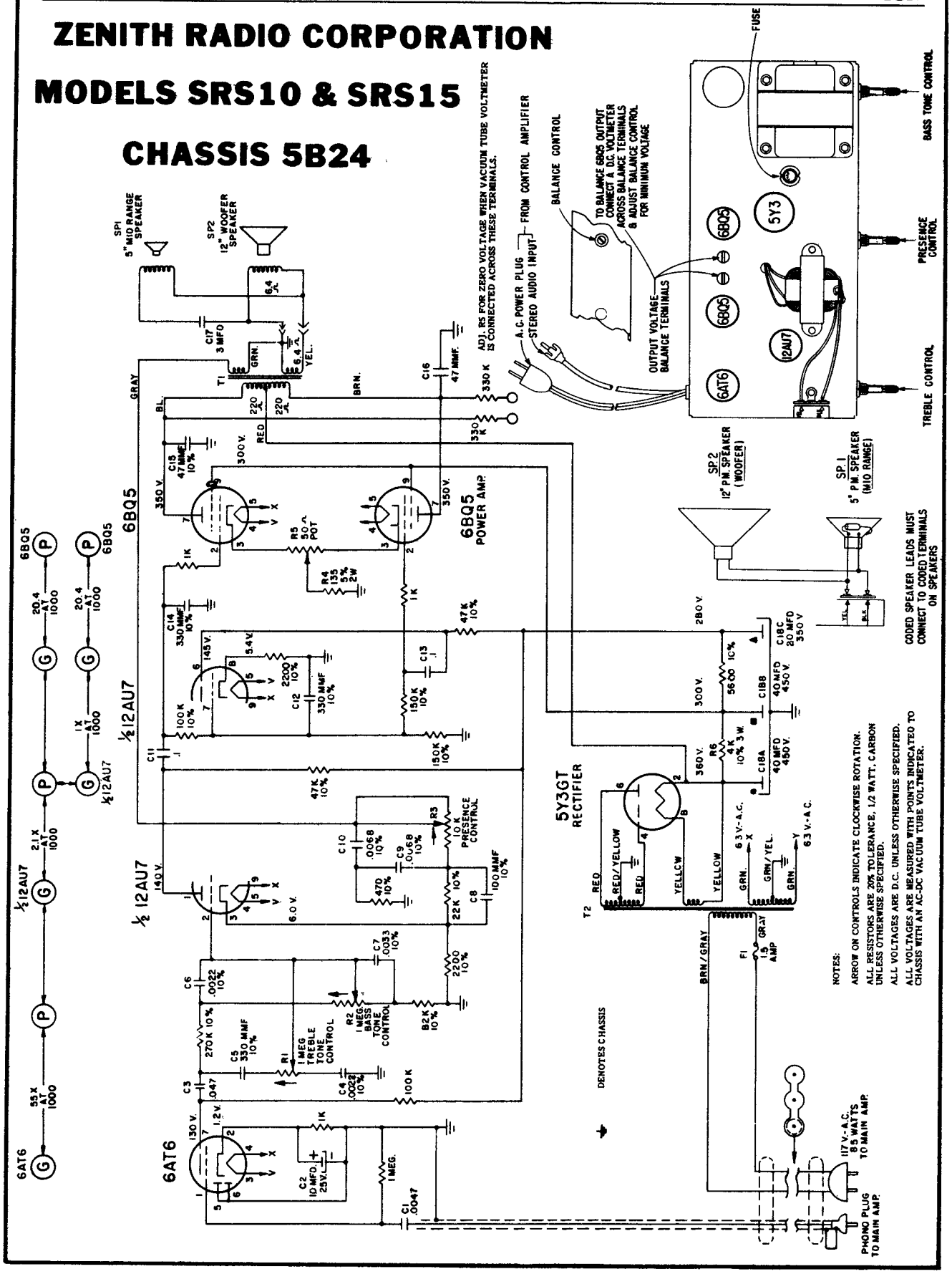

# ZENITH RADIO CORPORATION MODELS B615L, F, G CHASSIS 6B05

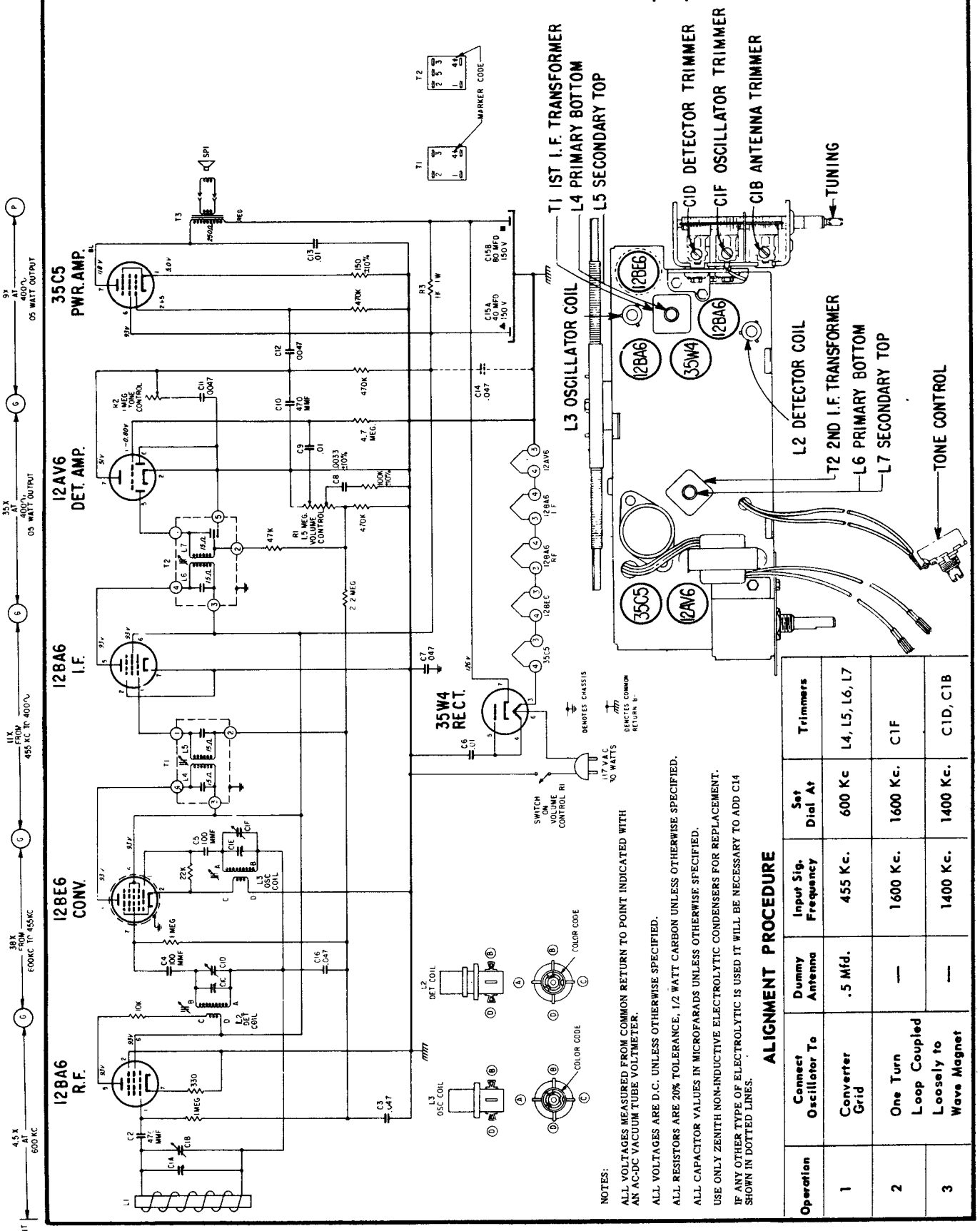


NOTES:

ALL VOLTAGES MEASURED FROM COMMON RETURN TO POINT INDICATED WITH AN AC-DC VACUUM TUBE VOLTMETER.

ALL VOLTAGES ARE D.C. UNLESS OTHERWISE SPECIFIED.

ALL RESISTORS ARE 20% TOLERANCE, 1/2 WATT CARBON UNLESS OTHERWISE SPECIFIED.

ALL CAPACITOR VALUES IN MICROFARADS UNLESS OTHERWISE SPECIFIED.

USE ONLY ZENITH NON-INDUCTIVE ELECTROLYTIC CONDENSERS FOR REPLACEMENT.

IF ANY OTHER TYPE OF ELECTROLYTIC IS USED IT WILL BE NECESSARY TO ADD C14 SHOWN IN DOTTED LINES.

## ALIGNMENT PROCEDURE

| Operation | Connect Oscillator To | Dummy Antenna | Input Sig. Frequency | Set Dial At | Trimmers |
|---|---|---|---|---|---|
| 1 | Converter Grid | .5 Mfd. | 455 Kc. | 600 Kc | L4, L5, L6, L7 |
| 2 | One Turn Loop Coupled | — | 1600 Kc. | 1600 Kc. | C1F |
| 3 | Loosely to Wave Magnet | — | 1400 Kc. | 1400 Kc. | C1D, C1B |

# Zenith Radio Corporation Model HF660, Chassis 6B06

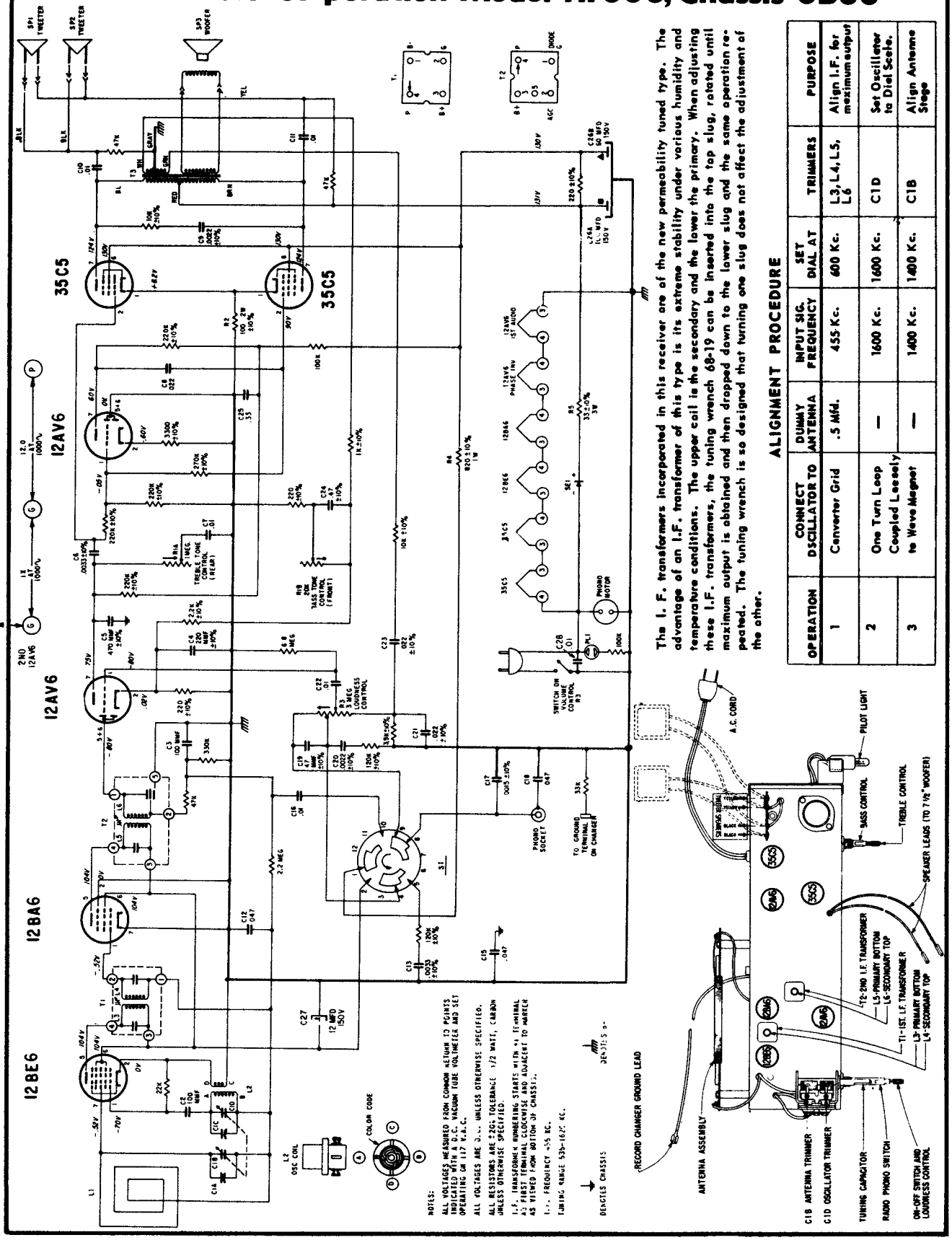


The I. F. transformers incorporated in this receiver are of the new permeability tuned type. The advantage of an I.F. transformer of this type is its extreme stability under various humidity and temperature conditions. The upper coil is the secondary and the lower the primary. When adjusting these I.F. transformers, the tuning wrench 68-19 can be inserted into the top slug, rotated until maximum output is obtained and then dropped down to the lower slug and the same operation repeated. The tuning wrench is so designed that turning one slug does not affect the adjustment of the other.

## ALIGNMENT PROCEDURE

| OPERATION | CONNECT OSCILLATOR TO | DUMMY ANTENNA | INPUT SIG. FREQUENCY | SET DIAL AT | TRIMMERS | PURPOSE |
|---|---|---|---|---|---|---|
| 1 | Converter Grid | .5 Mfd. | 455 Kc. | 600 Kc. | L3, L4, L5, L6 | Align I.F. for maximum output |
| 2 | One Turn Loop Coupled Loosely to Wave Magnet | — | 1600 Kc. | 1600 Kc. | C1D | Set Oscillator to Dial Scale. |
| 3 | | — | 1400 Kc. | 1400 Kc. | C1B | Align Antenna Stage |

ZENITH RADIO CORPORATION

# MODELS BP6B, L, V

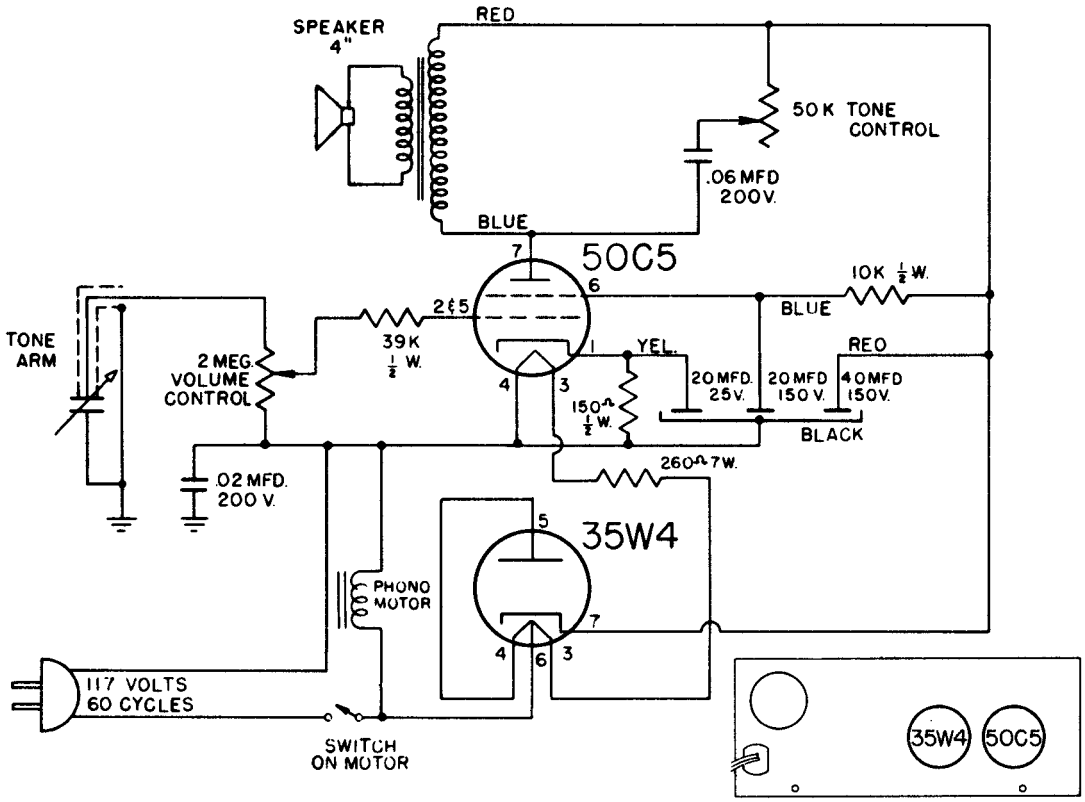


# MODEL BP7F

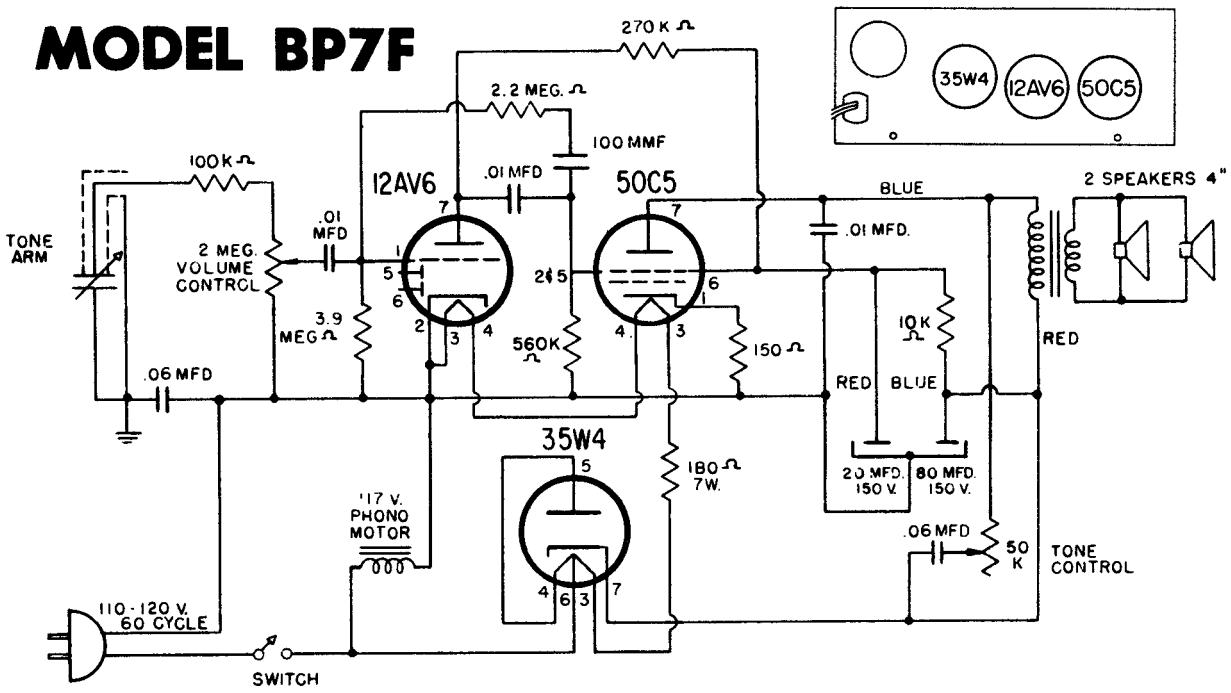

# ZENITH RADIO CORPORATION

# MODEL B728C, F & W, CHASSIS 7A03

(For alignment and additional data see page 183, adjacent at right)

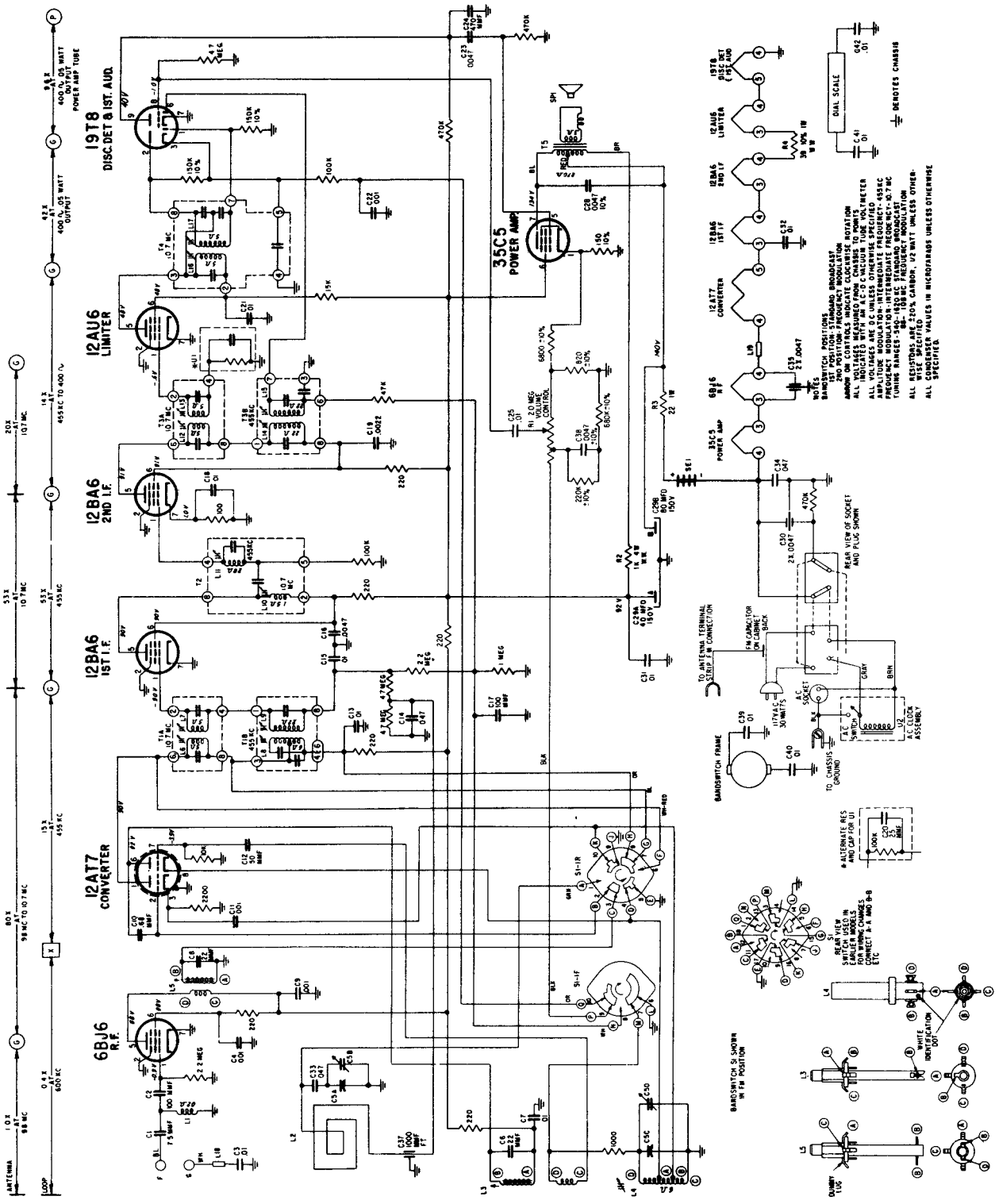

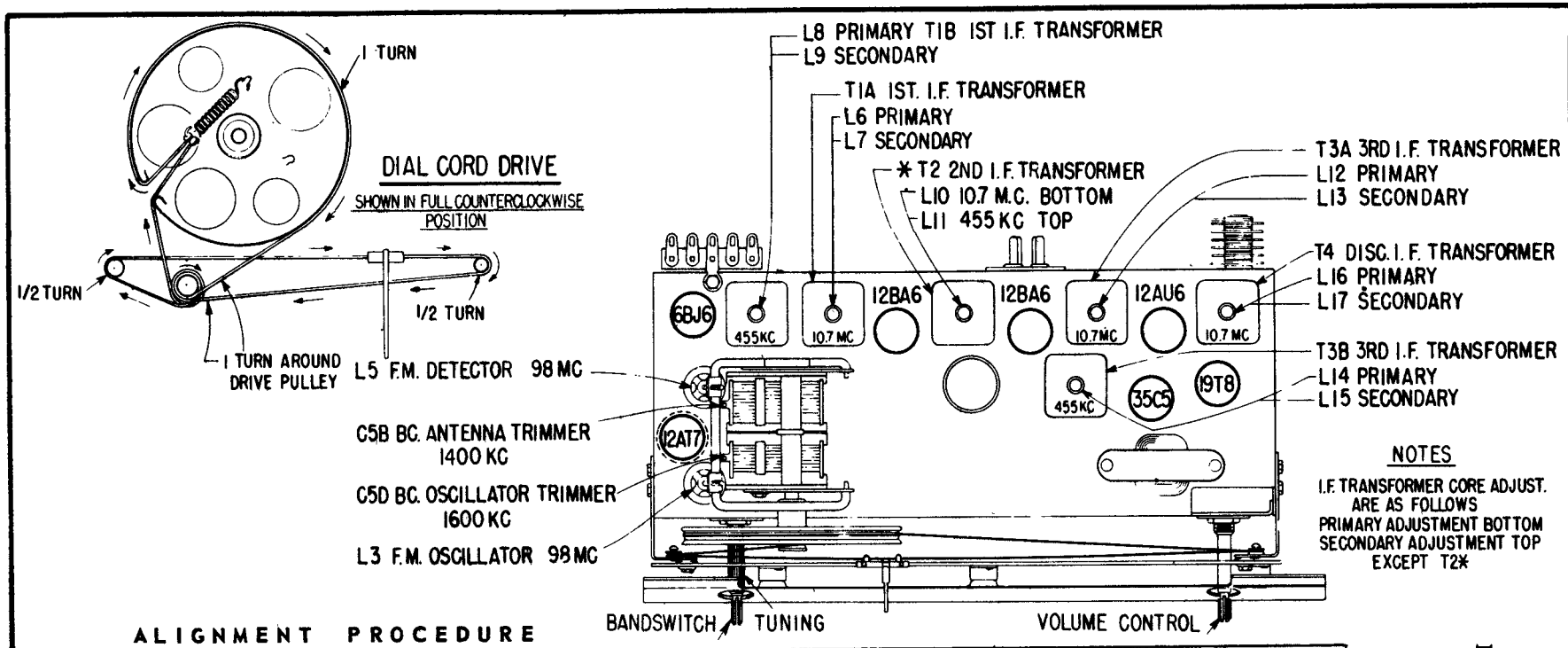


NOTES

I.F. TRANSFORMER CORE ADJUST. ARE AS FOLLOWS
PRIMARY ADJUSTMENT BOTTOM
SECONDARY ADJUSTMENT TOP
EXCEPT T2*

## ALIGNMENT PROCEDURE

| OPERATION | CONNECT OSCILLATOR TO | DUMMY ANTENNA | INPUT SIGNAL FREQUENCY | BAND | SET DIAL TO | ADJ. TRIMMERS | PURPOSE |
|---|---|---|---|---|---|---|---|
| 1 | Pin 2 12AT7 Converter | .05 Mfd. | 455 Kc. Modulated. | BC | 600 Kc. | L8, 9, 11, 14, 15 | Align I.F. channel for maximum output. |
| 2 | 2 turns loosely coupled to wavemagnet | | 1600 Kc. Modulated. | BC | 1600 Kc. | C5D | Set oscillator to dial scale. |
| 3 | 2 turns loosely coupled to wavemagnet | | 1400 Kc. Modulated. | BC | 1400 Kc. | C5B | Align antenna stage |
| 4 (a) | Pin 1 (grid) on 12AU6 limiter | .05 Mfd. | 10.7 Mc. Unmodulated. | FM | | L16 coil slug Primary discr. | Align primary of discriminator for maximum reading. |
| 5 (b) | Pin 1 (grid) on 12AU6 limiter | .05 Mfd. | 10.7 Mc. Unmodulated. | FM | | L17 coil slug sec. of discr. | Adjust secondary of discriminator for zero reading. |
| 6 (c) | Pin 1 (grid) on 12BA6 2nd IF. | .05 Mfd. | 10.7 Mc. Unmodulated. | FM | | L12 & L13 Prim. & Sec. of 3rd IF trans. | Align 3rd IF transformer for maximum reading. |
| 7 (c) | Pin 1 (grid) on 12BA6 1st IF. | .05 Mfd. | 10.7 Mc. Unmodulated. | FM | | L10 Prim. of 2nd IF transformer. | Align 2nd IF transformer for maximum reading. |
| 8 (c) | Pin 2 (grid) on 12AT7 converter tube socket | .05 Mfd. | 10.7 Mc. Unmodulated. | FM | | L6 & L7 Prim. & Sec. of 1st IF trans. | Align 1st IF transformer for maximum reading. |
| 9 (c) | Antenna Post FM (Remove line ant.) | 270 ohms | 98 Mc. Unmodulated. | FM | 98 Mc. | L3 Osc. Coil Slug | Set Oscillator to dial scale. |
| 10 (c) (d) | | 270 ohms | 98 Mc. Unmodulated | FM | 98 Mc. | L5 Det. Coil Slug | Align det. stage to maximum reading. |

ZENITH RADIO CORP.
Model B728C, -F, -W, Chassis 7A03
(Continued from page 182)

# SCHEMATIC DIAGRAM FOR 7AT48Z

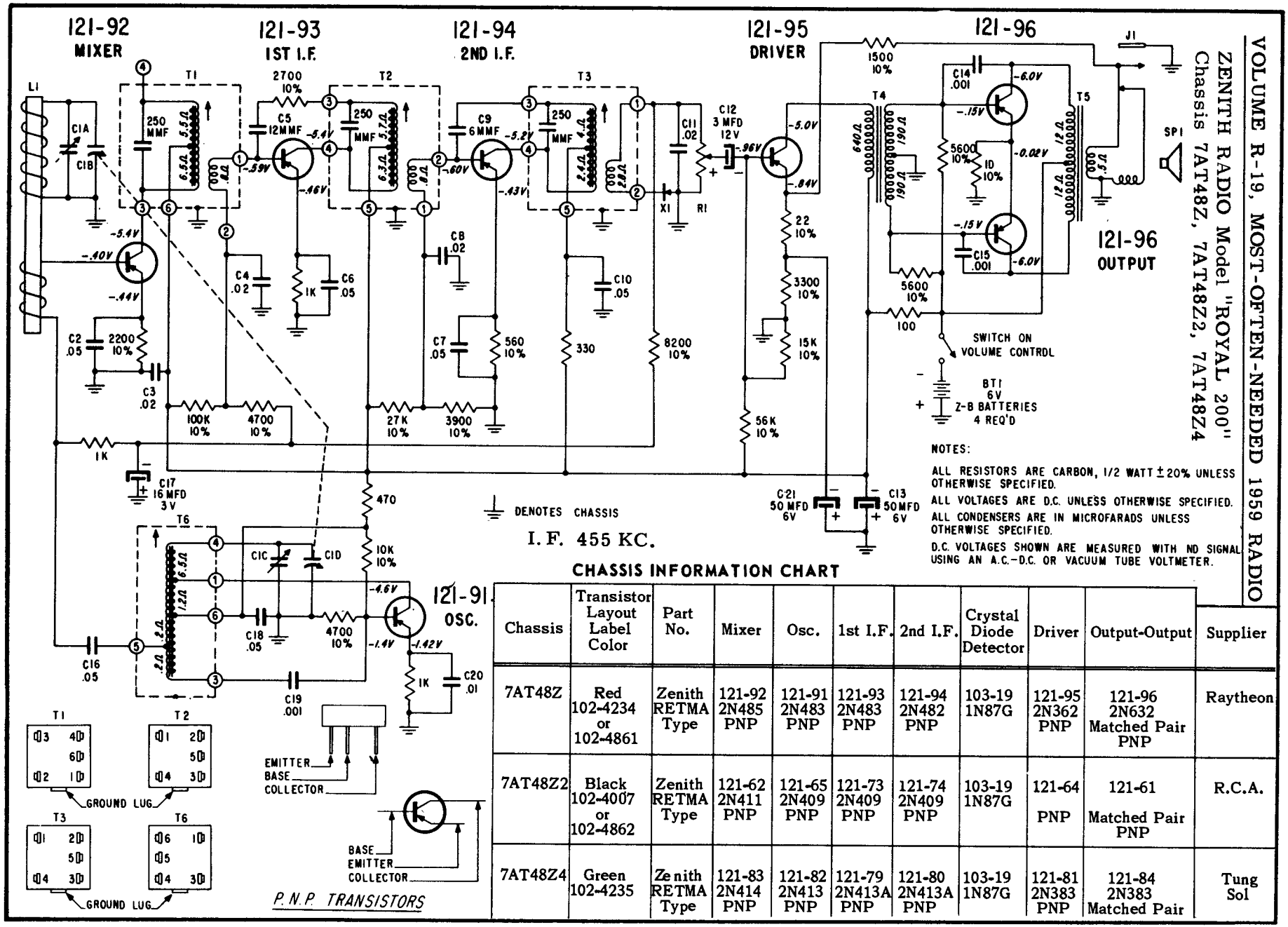


## CHASSIS INFORMATION CHART

| Chassis | Transistor Layout Label Color | Part No. | Mixer | Osc. | 1st I.F. | 2nd I.F. | Crystal Diode Detector | Driver | Output-Output | Supplier |
|---|---|---|---|---|---|---|---|---|---|---|
| 7AT48Z | Red 102-4234 or 102-4861 | Zenith RETMA Type | 121-92 2N485 PNP | 121-91 2N483 PNP | 121-93 2N483 PNP | 121-94 2N482 PNP | 103-19 1N87G | 121-95 2N362 PNP | 121-96 2N632 Matched Pair PNP | Raytheon |
| 7AT48Z2 | Black 102-4007 or 102-4862 | Zenith RETMA Type | 121-62 2N411 PNP | 121-65 2N409 PNP | 121-73 2N409 PNP | 121-74 2N409 PNP | 103-19 1N87G | 121-64 PNP | 121-61 Matched Pair PNP | R.C.A. |
| 7AT48Z4 | Green 102-4235 | Zenith RETMA Type | 121-83 2N414 PNP | 121-82 2N413 PNP | 121-79 2N413A PNP | 121-80 2N413A PNP | 103-19 1N87G | 121-81 2N383 PNP | 121-84 2N383 Matched Pair | Tung Sol |

## MODEL "ROYAL 450" -- CHASSIS 7AT45Z1

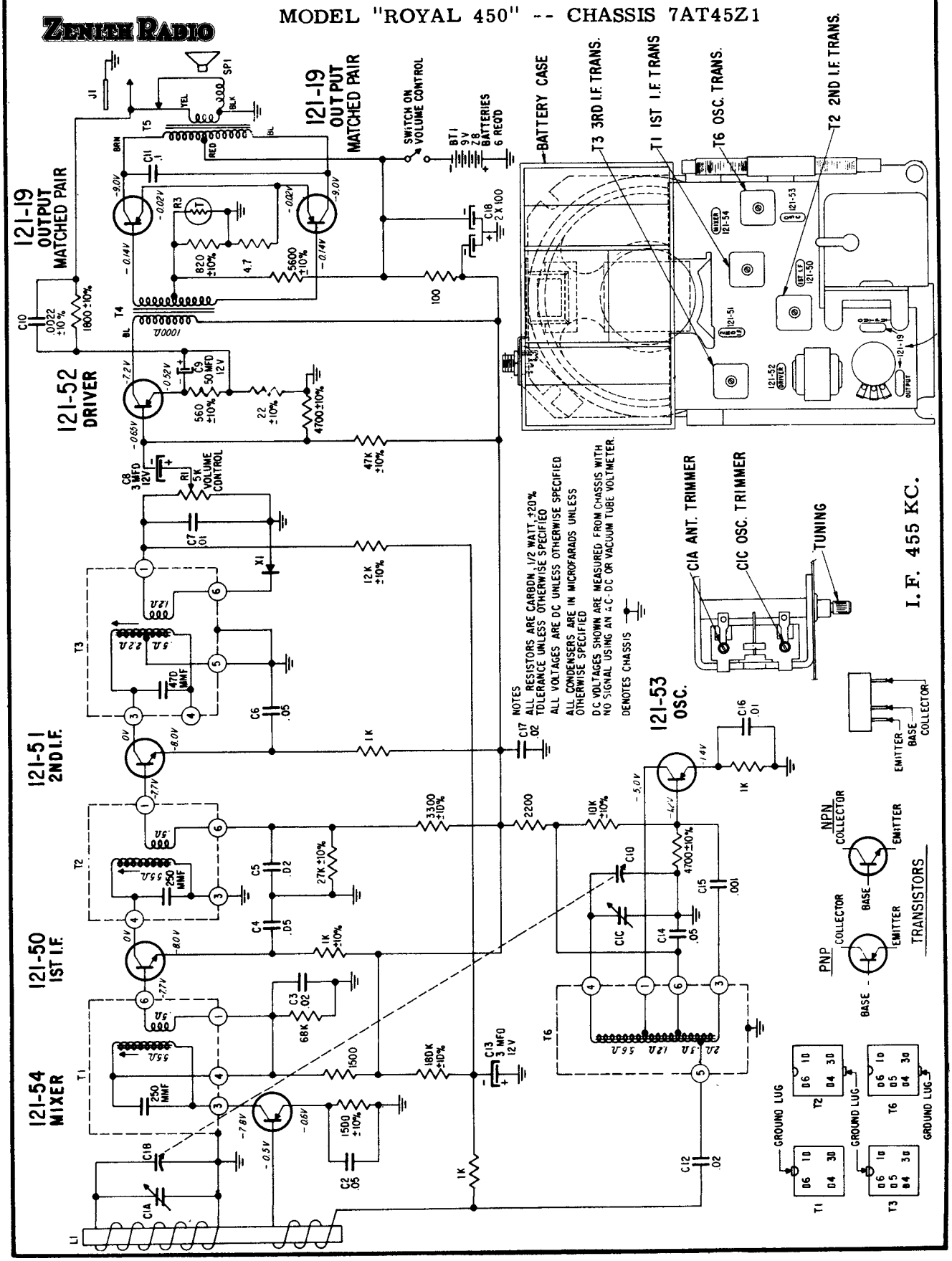

**ZENITH RADIO CORPORATION** Model "Royal 750L" -- Chassis 8AT41Z2

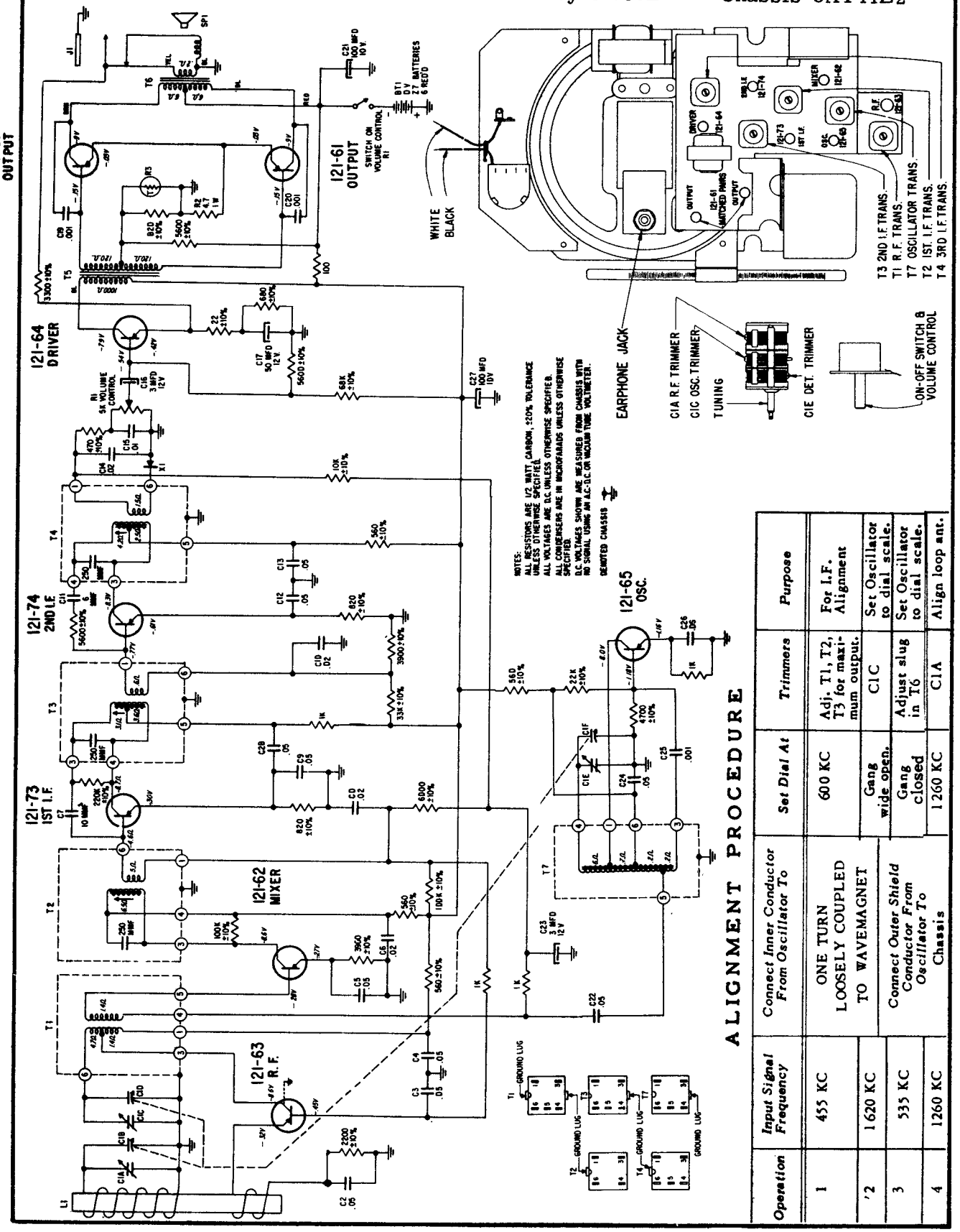


## ALIGNMENT PROCEDURE

| Operation | Input Signal Frequency | Connect Inner Conductor From Oscillator To | Set Dial At | Trimmers | Purpose |
|---|---|---|---|---|---|
| 1 | 455 KC | ONE TURN LOOSELY COUPLED TO WAVEMAGNET | 600 KC | Adj. T1, T2, T3 for maximum output. | For I.F. Alignment |
| 2 | 1620 KC | | Gang wide open. | C1C | Set Oscillator to dial scale. |
| 3 | 535 KC | Connect Outer Shield Conductor From Oscillator To Chassis | Gang closed | Adjust slug in T6 | Set Oscillator to dial scale. |
| 4 | 1260 KC | | 1260 KC | C1A | Align loop ant. |

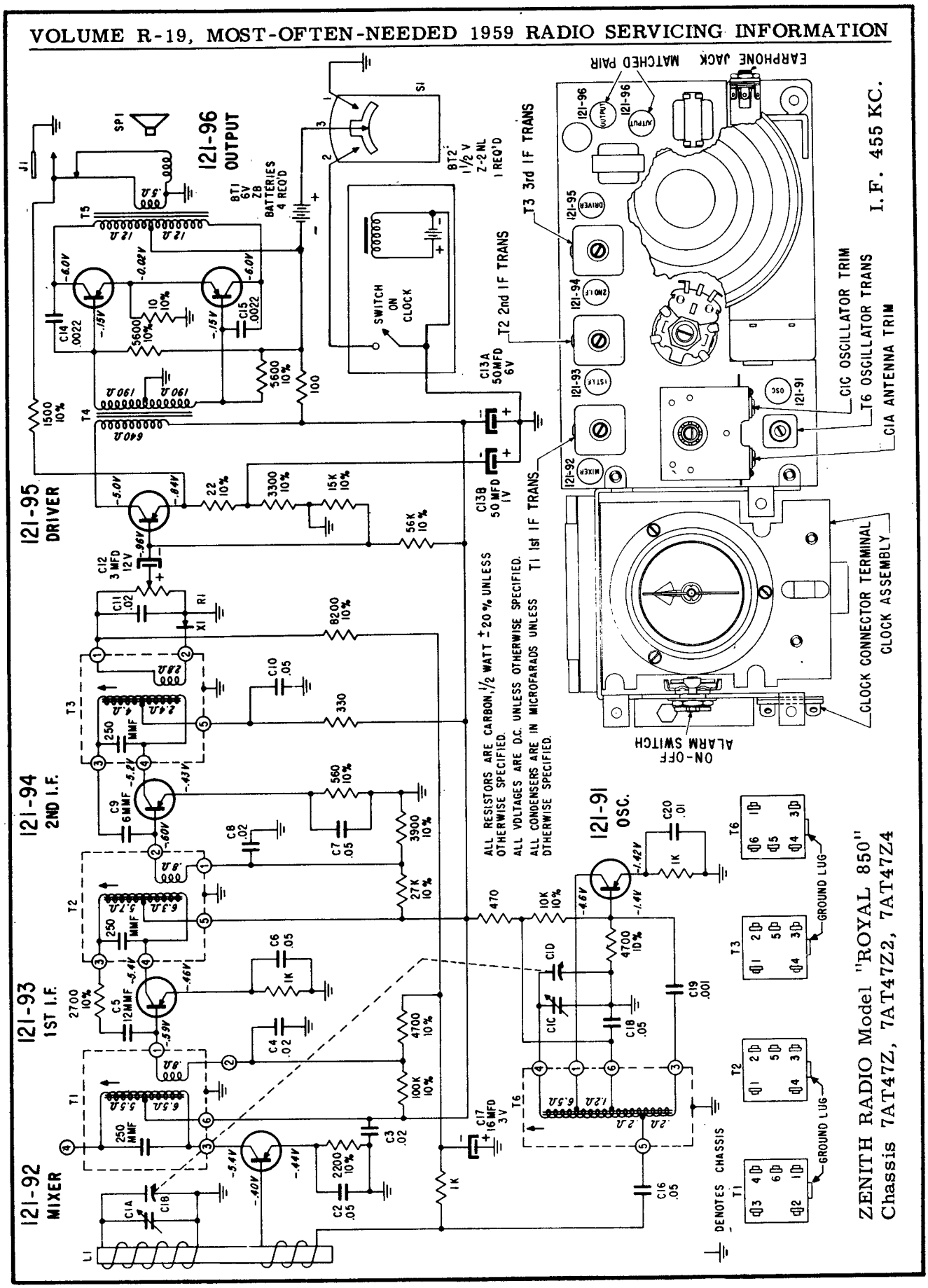
121-96 OUTPUT
121-95 DRIVER
121-94 2ND I.F.
121-93 1ST I.F.
121-92 MIXER
121-91 OSC.
121-96 OUTPUT
BT1 6V ZB BATTERIES 4 REQ'D
BT2 1½ V Z-2 NL 1 REQ'D
SWITCH ON CLOCK
T3 3rd IF TRANS
T2 2nd IF TRANS
T1 1st IF TRANS
EARPHONE JACK
MATCHED PAIR
I.F. 455 KC.
C1C OSCILLATOR TRIM
T6 OSCILLATOR TRANS
C1A ANTENNA TRIM
CLOCK CONNECTOR TERMINAL
CLOCK ASSEMBLY
ON-OFF ALARM SWITCH
ALL RESISTORS ARE CARBON, 1/2 WATT ±20% UNLESS OTHERWISE SPECIFIED.
ALL VOLTAGES ARE D.C. UNLESS OTHERWISE SPECIFIED.
ALL CONDENSERS ARE IN MICROFARADS UNLESS OTHERWISE SPECIFIED.
DENOTES CHASSIS
GROUND LUG
ZENITH RADIO Model "ROYAL 850"
Chassis 7AT47Z, 7AT47Z2, 7AT47Z4

# ZENITH RADIO CORP.

# MODEL "ROYAL 760"

# RADIO CHASSIS 8AT42Z2

(Alignment information on page 189)

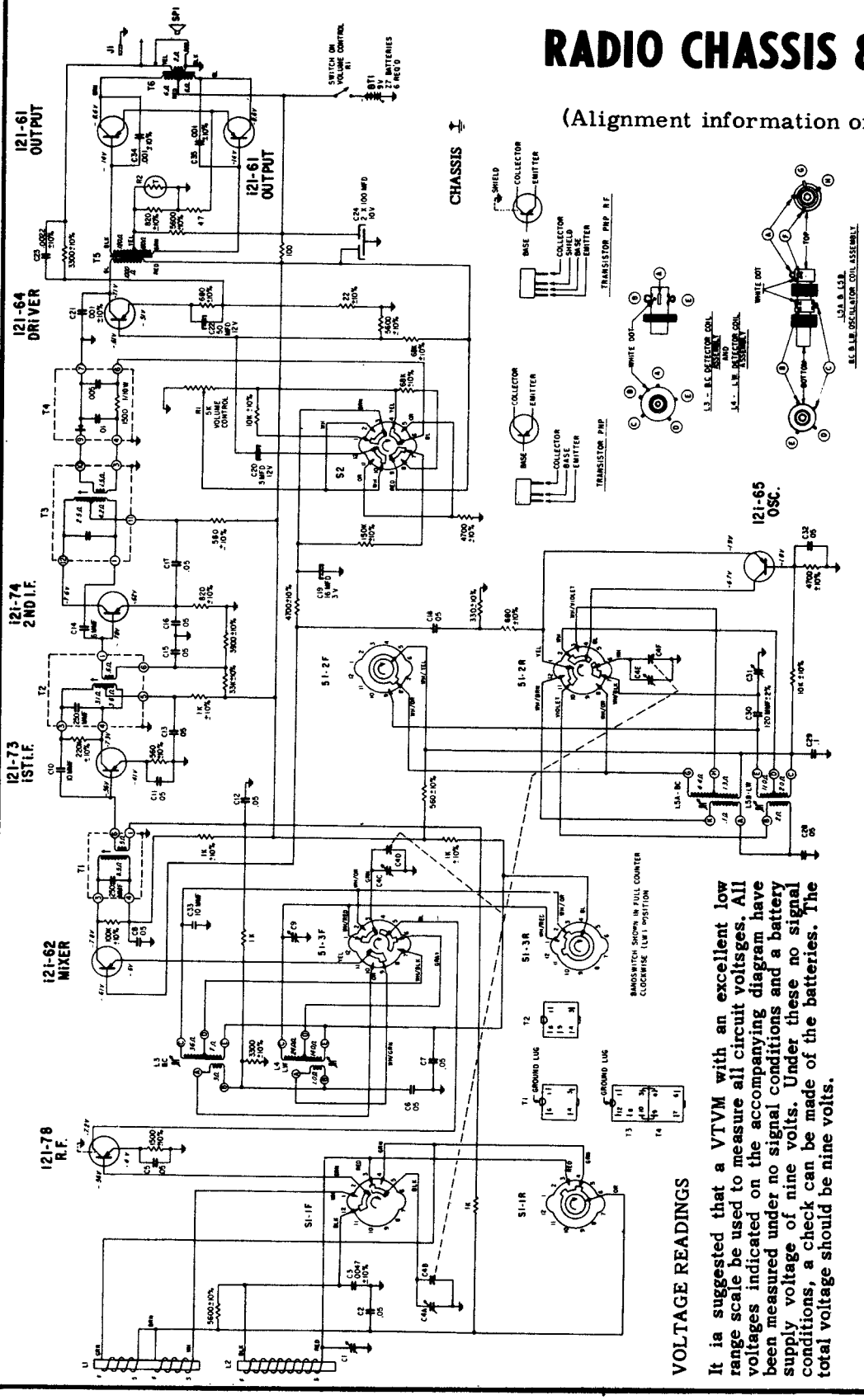


## VOLTAGE READINGS

It ia suggested that a VTVM with an excellent low range scale be used to measure all circuit voltsges. All voltages indicated on the accompanying diagram have been measured under no signal conditions and a battery supply voltage of nine volts. Under these no signal conditions, a check can be made of the batteries. The total voltage should be nine volts.

## COMPONENT REPLACEMENT

When aoldering components at the baae of the transistor socket, it ia suggested that the tranaistor be removed to avoid sny poaaibility of excessive heat being transferred through the aocket to the transiator. When soldering the low voltage electrolytica and germanium diodes, it is auggeated that the wire be held with a pair of long nose pliers while soldering. The long nose pliers will act aa a heat sink.

NOTES:

ALL RESISTORS ARE 1/2 WATT. CARBON ±20% TOLERANCE UNLESS OTHERWISE SPECIFIED.

ALL VOLTAGES ARE D.C. UNLESS OTHERWISE SPECIFIED.

ALL CONDENSERS ARE IN MICROFARADS UNLESS OTHERWISE SPECIFIED.

D.C. VOLTAGES SHOWN ARE MEASURED FROM CHASSIS WITH BANDSWITCH IN BROADCAST POSITION AND NAVIGATE NORMAL SWITCH IN NORMAL POSITION WITH NO SIGNAL USING AN A.C. D.C. OR VACUUM TUBE VOLTMETER.

## TRANSISTOR & TRIMMER LAYOUT FOR 8AT42Z2

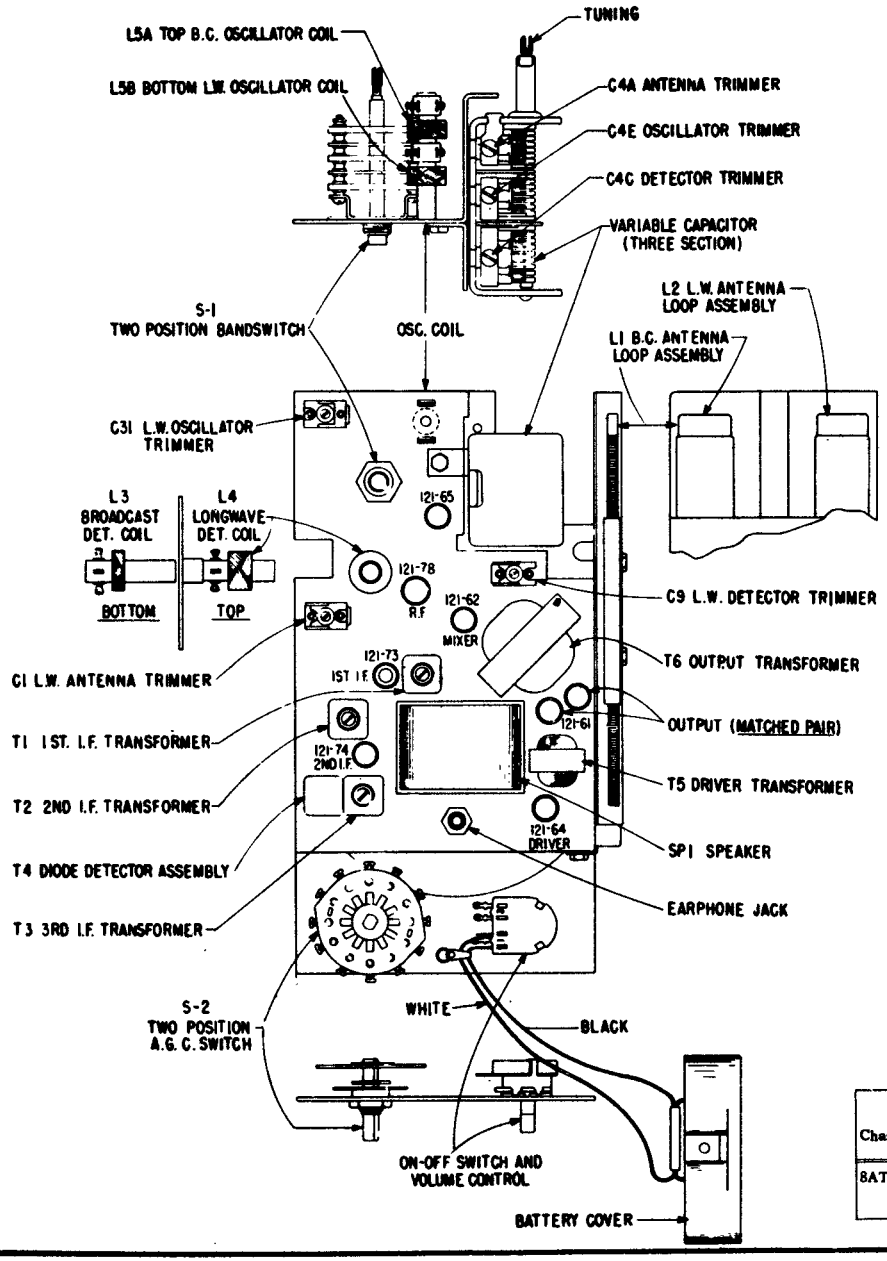


# ZENITH RADIO CHASSIS 8AT42Z2

## MODEL "ROYAL 760"

(Continued from page 188)

## ALIGNMENT PROCEDURE

**NOTE:** Alignment must be made with Nor. - Nav. switch in Nor. position.

| OPER. | CONNECT GEN. TO DUMMY ANTENNA | INPUT SIG. FREQUENCY | BAND | SET DIAL AT | TRIMMERS | PURPOSE |
|---|---|---|---|---|---|---|
| 1 | One turn loop coupled loosely to Broadcast Wavemagnet | 455 Kc | BC | 1600 Kc | T1, T2, T3 | Align I.F. |
| * 2 | One turn loop coupled loosely to Broadcsst Wavemagnet | 600 Kc | BC | 600 Kc | Rock Gang, Adjust L5A | Alignment of BC at 600 Kc |
| 3 | One Turn Loop Coupled Loosely to Broadcast Wavemagnet | 1600 Kc | BC | 1600 Kc | C4E | Set osc. to scale |
| 4 | | REPEAT OPERATIONS 2 & 3 | | | | |
| *5 | | 600 Kc | BC | 600 Kc | Rock, Adjust L3 | Alignment of BC detector at 600 Kc |
| 6 | | 1400 Kc | BC | 1400 Kc | C4C | Alignment BC detector |
| 7 | | REPEAT OPERATIONS 5 & 6 | | | | |
| 8 | | 1400 Kc | BC | 1400 Kc | C4A | Alignmeat of BC antenna |
| *9 | One turn coupled loosely to Long Wave Wsvemegnet | 165 Kc | LW | 165 Kc | Rock Gang, Adjust L5B | Alignment of LW at 165 Kc |
| *10 | One Turn Loop Coupled Loosely to Long Wave Wavemagnet | 400 Kc | LW | 400 Kc | C31 | Set osc. to scale |
| 11 | | REPEAT OPERATIONS 9 & 10 | | | | |
| *12 | | 165 Kc | LW | 165 Kc | Rock, Adjust L4 | Alignment LW detector at 165 Kc |
| *13 | | 370 Kc | LW | 370 Kc | C9 | Alignment LW detector |
| 14 | | REPEAT OPERATIONS 12 & 13 | | | | |
| 15 | | 370 Kc | LW | 370 Kc | C1 | Alignment of LW antenna |

***NOTE:** Rock tuning condenser when making alignment under Operations 2, 5, 9, 10, 12, 13.

| Chassis | Chassis Color Dot | Transistor Layout Label Color | Part No. | R.F. | Mixer | Osc. | 1st I.F. | 2nd I.F. | Crystal Diode Detector | Driver | Output-Output | Supplier |
|---|---|---|---|---|---|---|---|---|---|---|---|---|
| 8AT42Z2 | Black | Black 102-3497 | Zenith Typu | 121-78 PNP | 121-62 PNP | 121-65 PNP | 121-73 PNP | 121-74 PNP | 103-22 IN295 | 121-64 PNP | 121-61 Matched Pair PNP PNP | R.C.A. |

# ZENITH RADIO CORP. CHASSIS 7AT44Z1

## MODEL "ROYAL 900"

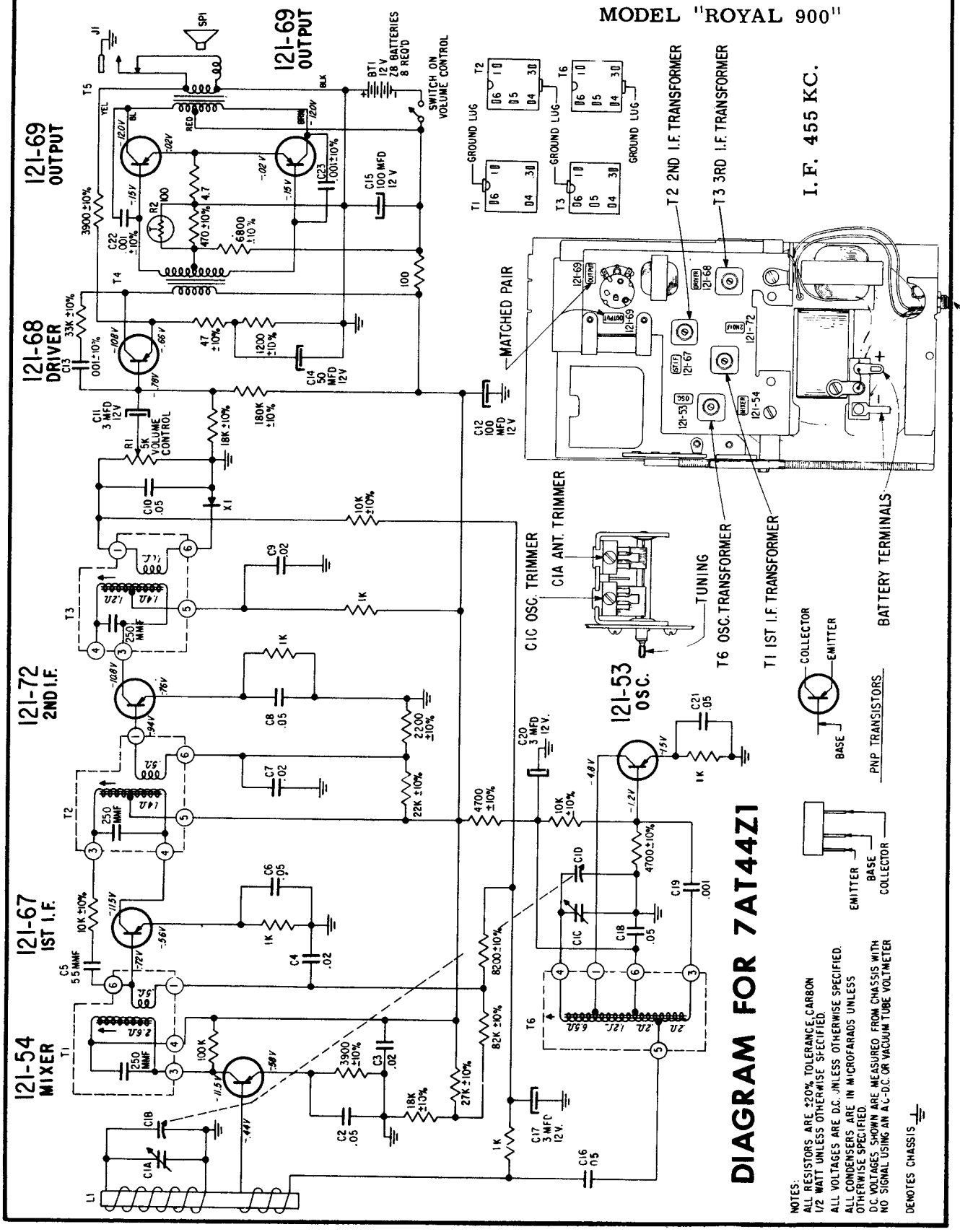

# Index