Most - Often - Needed

1941

RADIO DIAGRAMS

and Servicing Information

Compiled by

By M. N. BEITMAN

B.S. in Mathematics, Illinois Institute of Technology
Instructor, Chicago High Schools
Formerly, Engineer, U. S. Signal Corps
Associate, Institute of Radio Engineers
Holder of Radiotelephone First Class License
Author of Many Radio Books and Articles

SUPREME PUBLICATIONS

CHICAGO

INDEX

Admiral
see Continental

Air King Prod.
4012 7
4016 7
4112 7
4136 7

Airline
see Montgomery

Allied Radio
B-10596 8
B-10598 8
B-10600 8
B-10606 8
B-17103 8
B-17104 8
B-17107 8
B-17108 8
B-17113 8
B-17114 8
B-17165 9
B-17180 9
B-17187 9

Arvin
see Noblitt-Sp.

Belmont Radio
518 10
533 11
536 12
681 13
1100 14

Chevrolet
985694 15
985695 16
985697 17

Continental
G-5 18
M5-PH 18
XM5-PH 18

Crosley Corp.
CA-12 28
22 19
22-AS 19
CR-26 20
27 20
28 21
Chassis 28 33
29 22
30 23
J30-BC 23
33, 33-BG 25
34, 34-BH 26
C-35-AK 24
TK-52 31-32
60 28
TA-62 29-30
63 29-30
64 31-32
CB-82-R 33-34

Delco
see United Mot.

Detrola Radio
295 35
295-1 35
297 35
304 36
305 36
310 36
320 37
360 37
392 37
2741 37
2742 37
3041 36
3051 36
3101 36
3201 37
3202 37
3601 37
3602 37

Emerson Radio
DB-296 38
DB-301 38
DB-315 38
DB-327 38
DL-330 38
DW-330A 38
DW-330B 38
FG-330 44
DY-337 43
DY1-337 43
DR-343 39
DR1-343 39
DR-348 39
DR1-348 39
DY-349 43
DY1-349 43
DR-350 39
DY-351 43
DY1-351 43
DR-352 39
DW-358 38
DS-365 40-41
DS-372 40-41
DU-379 42
DU-380 42
FC-400 44
FP-421 45
FP-422 45

Fada Radio
148 47
153 48
194 46

F.M. data 182

Galvin Mfg. Co.
see Motorola

Garod Radio
BP-36A 49

MANUAL OF 1941 MOST POPULAR SERVICE DIAGRAMS

General Electric
J-51 50
J-53 50
J-54 50
J-71 51
J-105 52
JB-410 53
LB-530 55
J-602 54
J-603 54

Hallicrafters
S-27 56-57

Howard Radio
14ACB 58
702 58
765 59-60
780 60-61

Lafayette Radio
E-114 62
E-191 63

Majestic Radio
T101-L-A 65
TP221-A 65
TP231-A 65
TR-321-A 64
TR-331-A 64
403 64

Magnovox
CR-154 66
CR-156 67

Midwest Radio
51 68
181 69

Montgomery-Ward
04BR-511A 70
04BR-512A 70
04BR-513A 71
04BR-514A 71
04BR-729A 72
04BR-730A 72
04BR-1105A 73

Montgomery-Ward
04WG-464 74
04WG-569B 75
04WG-610 76
04WG-611 76
04WG-731A 78
04WG-803 77
14WG-672 79

Motorola
40 new 81
50W 81
56X1 81
58-F1 82
58-FRC 82
65-BP1,2,3,4 82
251 85
301 80
401 83-84

Noblitt-Sparks
RE-76 87
RE-78 88
RE-82 86
RE-84 89
RE-86 89
520 89
522 87
622 88
720 89
822 86

Packard Bell
65-A 90
67-R 90
67-RPA 90

Philco Radio
PT-2 92
PT-6 92
PT-12 92
PT-30 91
PT-42 91
PT-44 91
PT-49 91
41-90 97
41-95 97
41-100 97

Philco Radio
41-105 97
41-110 93
41-220 94
41-221 95
41-225 94
41-226 95
41-230 96
41-231 98
41-235 96
41-250 99
41-255 99
41-256 100
41-258 101
41-260 102
41-265 102
41-280 103-104
41-285 103
41-287 103
41-290 103
41-295 105
41-300 105
41-316 106-107
41-601 108
41-602 108
41-603 109
41-604 109
41-605 109
41-607 109
41-608 110
41-609 110
41-610 111
41-611 111
41-620 112
41-623 113
41-624 113
41-625 113
41-705 114
41-842 116
41-843 116
41-844 116
41-851 115

Pilot Radio
B-1 117
T-1 117
T-186 117

COMPILED BY M. N. BEITMAN, SUPREME PUBLICATIONS

MANUAL OF 1941 MOST POPULAR SERVICE DIAGRAMS

RCA Mfg. Co.
- 1X 118
- 1X2 118
- BP-10 119
- 10X 120
- 12X 121
- 12X2 121
- 14X 122
- 15-BP 123
- 15X 124
- 16K 125-126
- 16T3 125-126
- 16X-1 124
- 16X-2 124
- 16X-3 124
- 16X-4 127
- 16X-11 128
- 16X-13 128
- 17K 129
- 19K 131
- 45X-3 130
- 45X-4 130
- 45X-16 130
- 45X-17 130
- 45X-18 132
- V-100 133
- V-101 133
- V-102 134
- 110-K 135-136
- 111-K 137

Radio Wire Tel.
- see Lafayette

Sears, Roebuck
- R-101 139
- R-111 139
- 3351 138
- 3361 140
- 3451 138
- 3461 140
- 3551 138
- 3561 140
- 3621 140
- R-5561 141
- 5601A 142
- 5732 141

Sears, Roebuck
- 6449 142
- 101.614 139
- 101.615 139
- 101.617 141
- 101.628 142
- 109.356 140
- 109.371 141
- 132.802 138

Sentinel Radio
- 248 143

Silvertone
- see Sears,

Sonora Radio
- 3 way port. 144
- 4 tube TRF 144

Sparton
- 511 145
- 651 147
- 601-S 146
- 761 148
- 1091 149

Stewart-Warner
- 11-5V 150
- 11-5W 151
- 11-6T 153
- 11-6T-S 153
- 11-8D 154
- 11-8D-Z 154
- 15-5Y 152

Stromberg-Carlson
- 515 155
- 520 156
- 530 157
- 535 157

Talk-A-Phone
- MS-10 158
- LP-65 158
- LP-70 158

Truetone
- see Western Auto

United Motors
- R-1171 160
- R-1172 160
- R-1173 160
- R-1176 159
- R-1181 159
- R-1186 161-162
- R-1188 161

Wells-Gardner
- 6B18 163

Western Auto
- D-1175 164
- D-1190 165
- D-1191 166

Westinghouse
- WR-12X7 169
- WR-173-L 167
- WR-175 167
- WR-184 168
- WR-186 169
- WR-388 170
- WR-682 168
- WR-682A 168

Wilcox-Gay Corp.
- A-89 171
- A-91 171-172
- A-92 171
- A-93 171
- A-94 171
- A-101 171
- A-102 171

Zenith Radio
- 4B-01 184
- 4K-600 184
- 5A-03 173
- 5A-10 174
- 5B-01 185
- 5D-610 185
- 5D-625 185
- 5G-504 173
- 5G-510 174
- 5G-534 174
- 6A-05R 189

MANUAL OF 1941 MOST POPULAR SERVICE DIAGRAMS

Zenith Radio		Zenith Radio		Zenith Radio	
6A-05R	189	6G-533	188	10H-551	179
6A-16	175	6G-560	188	10H-571	179
6A-19	176	6S-532	189	10H-571R	191
6A-20	177	6S-596	177	10H-573	191-192
6A-24	187	6S-597	177	12A-1	180
6A-25	188	7A-11	190	12S-550Z	180
6A-26	186	7S-598	190	12S-568E	180
6D-512	175	8A-04	178	12S-568Z	180
6D-516	187	8S-593	178	12S-569E	180
6D-520	186	8S-594	178	12S-569Z	180
6D-538	186	10A-2R	192	12S-595Z	180
6D-539	175	10A-3	179	S8500Z	181
6G-501	176	10A-3R	191-192	S9000	181

SUPREME PUBLICATIONS

9 South Kedzie Avenue • Chicago, Illinois

Most-Often-Needed

RADIO DIAGRAMS

and Servicing Information

☐ **1942** VOLUME 5 You need this newest Supreme manual of servicing data on all popular 1942 sets. Repair radios quickly and properly—follow factory instructions given in these manuals. 208 fact-packed pages. Large size, 8½x11 inches. Manual style binding **$2.00**

☐ **1940** VOLUME 3 Let this important manual give you over 80% of 1940 circuits you will ever need, acquaint you with new developments, train you to service quickly and efficiently millions of sets. Data on F.M., portables, recording, etc. 417 models of 43 manufacturers. 208 pages, 8½x11 inches.....Net Price **$2.00**

☐ **1939** VOLUME 2 Another condensed manual of most-popular diagrams you need. Circuit data, hints, and information are time-savers and money-makers for you. Let these diagram manuals guide you to easier service work. 192 pages, 8½x11 inches. Diagrams of 39 manufacturers..... **$2.00**

☐ **1926-1938** VOLUME I The most popular manual of the series. Will pay for itself with time saved the first day of use. 427 diagrams of most-serviced radios, with parts list and alignment information. 244 pages, 8½x11 inches..... **$2.50**

6

☐ **PRACTICAL RADIO for War Training**

This new, 1943 manual will clarify the important radio facts, explain the principles which may have puzzled you, and point the way to faster radio repairing. You will find hundreds of practical hints for mounting parts, testing components, trouble-shooting, using instruments. Needed useful theory in each chapter is followed with practical applications. This is the book that will help you repair radios faster, or obtain a good radio War-job, or get ahead in the Armed Forces. Use this book as your ready reference for finding the right answer to every radio problem. Written by M. N. Beitman. 336 large pages, 6x9 inches. Printed on thick, enamel paper. Almost 300 illustrations and diagrams to help you. Seal leatherette cover. Attractive manual-binding. Sold with a money-back guarantee. Price only..... **$2.95**

☐ **Simplified Radio Servicing by COMPARISON Method**

Repair radios in minutes instead of hours. Revolutionary different COMPARISON technique permits you to do expert work on all radio sets. Most repairs can be made without test equipment or with only a voltohmmeter. Many simple, point-to-point, cross-reference, circuit suggestions locate the faults instantly. Plan copyrighted. Covers every radio set—new and old models. This new servicing technique presented in handy manual form, size 8x11 inches, 112 pages. Over 1,000 practical service hints. 16 large, trouble-shooting blueprints. Charts for circuit analysis. 114 tests using a 5c resistor. Developed by M. N. Beitman.....Net Price **$1.50**

☐ **How to MODERNIZE RADIOS for Profit**

Cash in by improving audio circuits, modernizing cabinets, adding features usually found on late model sets. Practical job-sheets with schematics and photographs make the work easy. You are told how to obtain modernization work, what to charge, and how to complete the job quickly and efficiently. Large size, 8½x11 inch manual is priced at only..... **$1.00**

MANUAL OF 1941 MOST POPULAR SERVICE DIAGRAMS

AIR-KING PRODUCTS CO., Inc.

1523-29 63rd STREET BROOKLYN, N. Y., U. S. A.

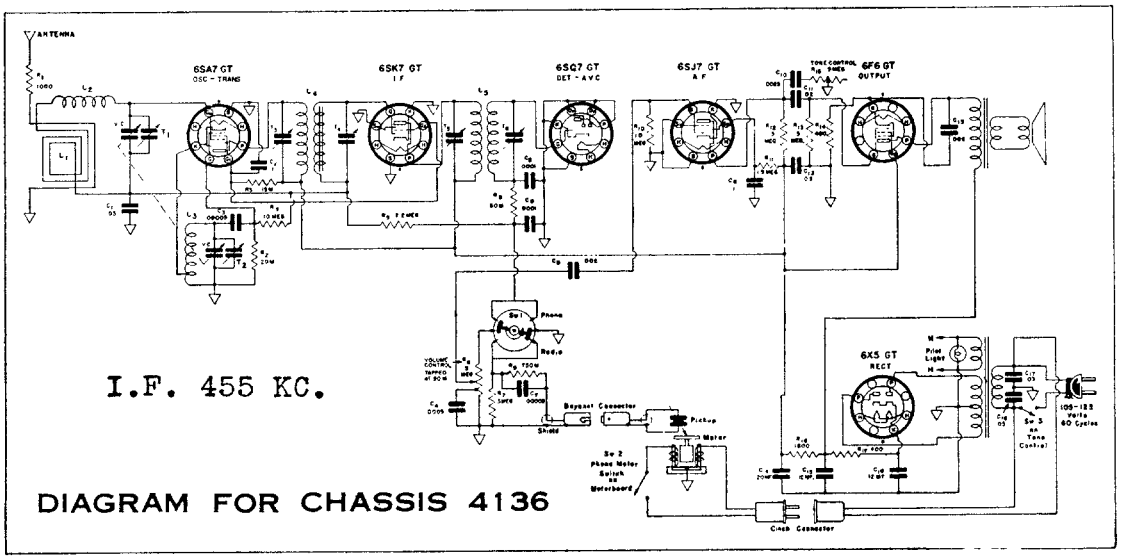

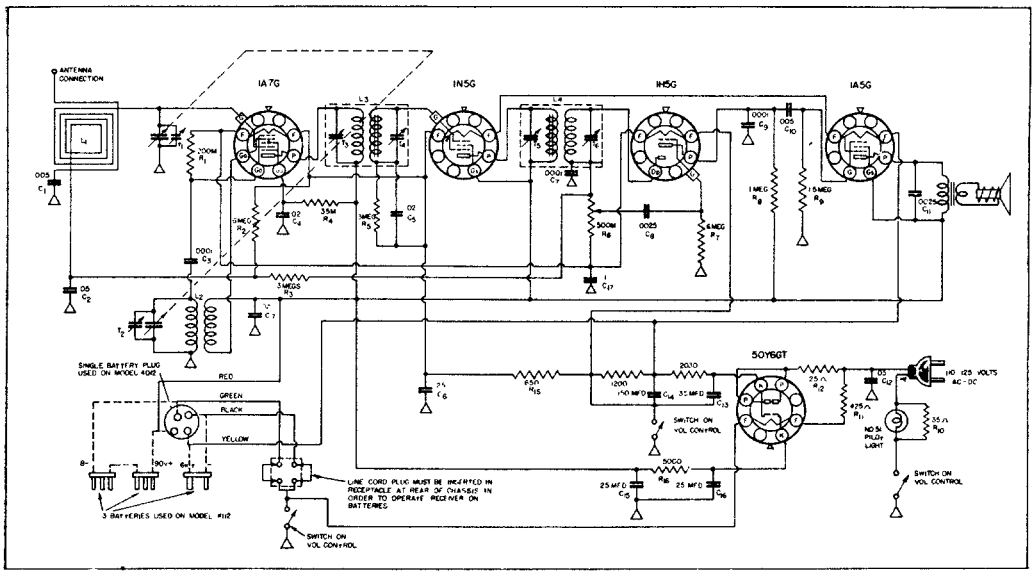

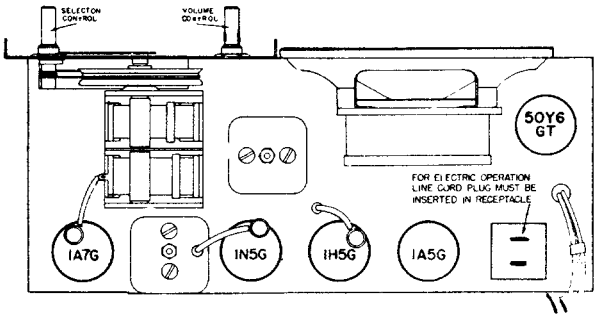

Air-King Products Co.

Models 4012, 4016, 4112

I.F. 455 KC.

COMPILED BY M. N. BEITMAN, SUPREME PUBLICATIONS

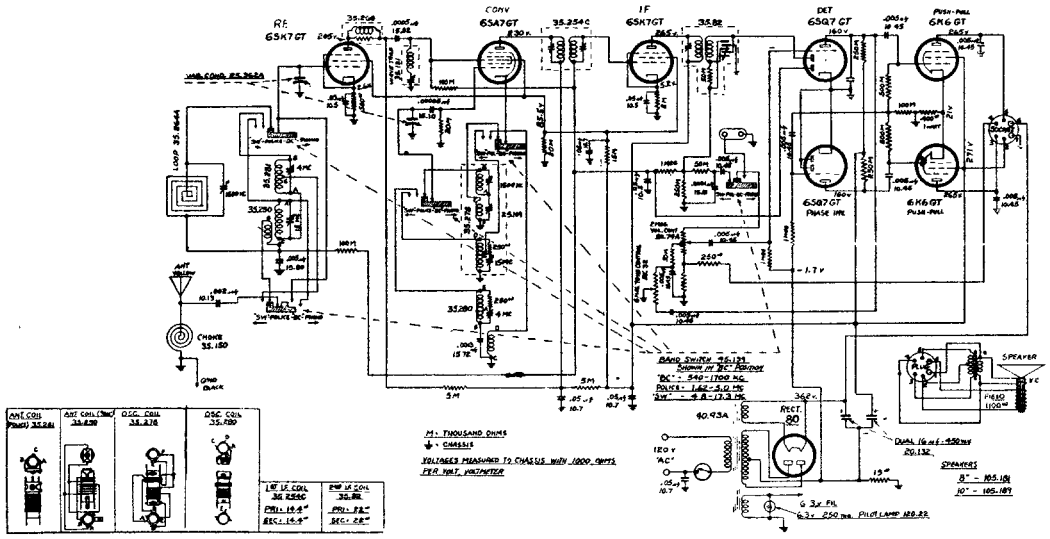

I.F. 456 KC.

SCHEMATIC DIAGRAM MODELS B-17113—B-17114

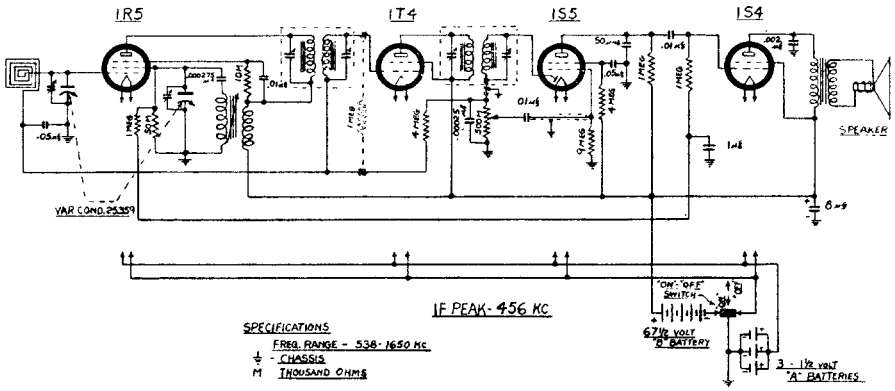

Models B10600, B10606, B17107-08

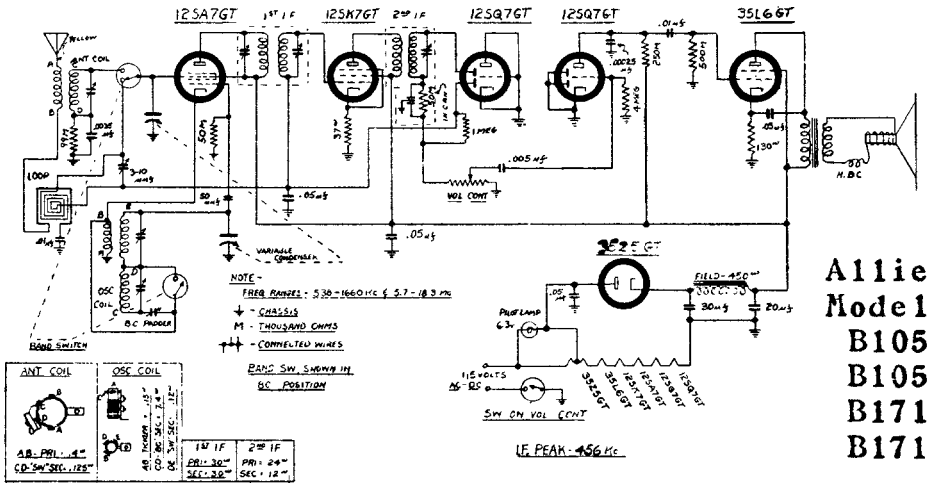

Allied Radio Models:
B10596
B10598
B17103
B17104

Knight 12 Tube Radio and Automatic Phonograph

B17165, B17180, B17187.

ALLIED RADIO CORPORATION CHICAGO

I.F. 455 KC.

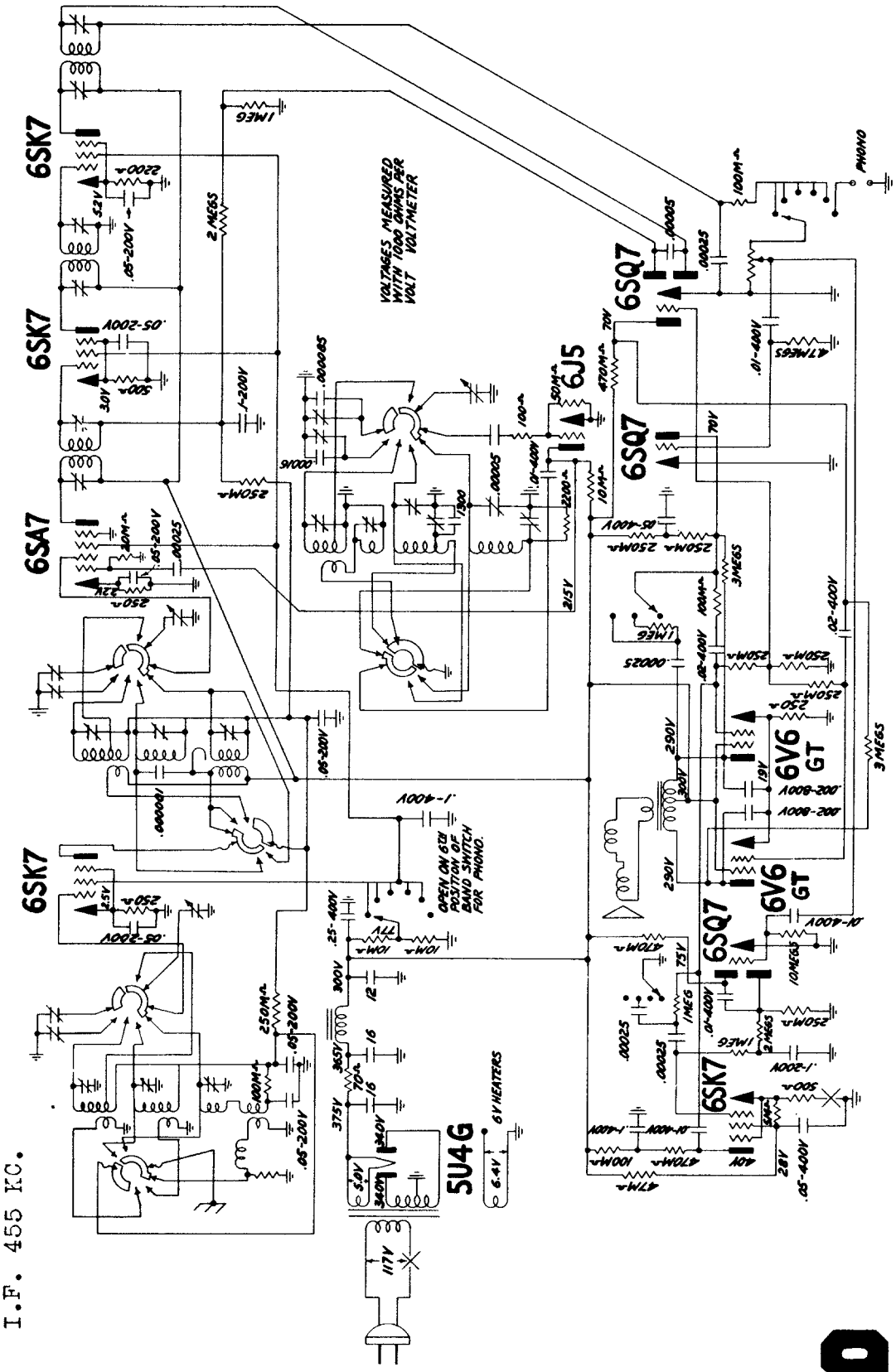

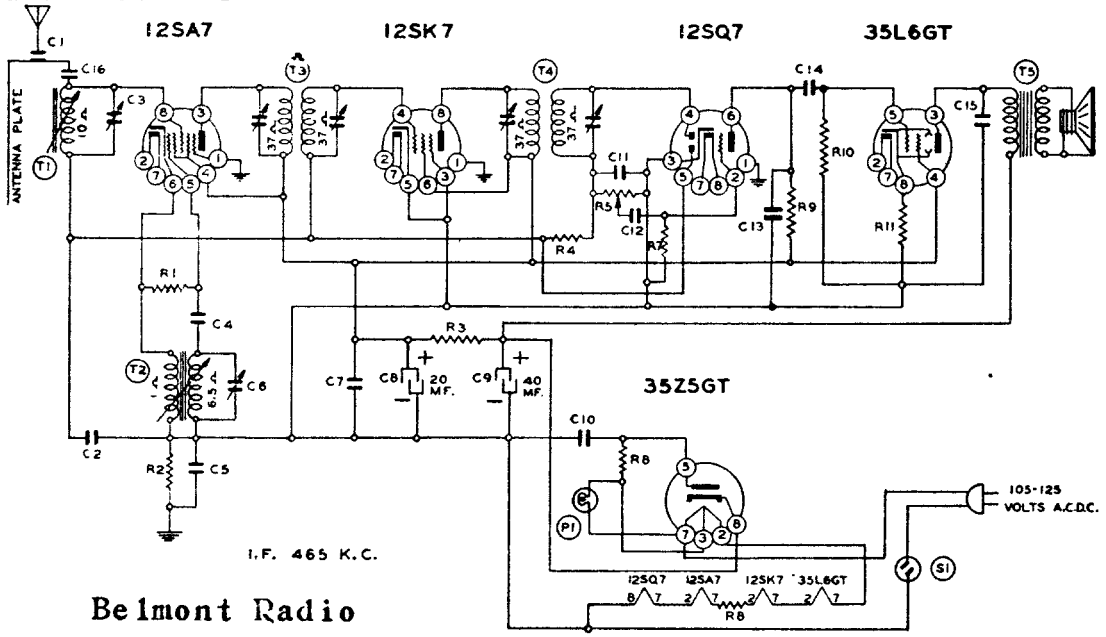

Belmont Radio

Circuit Diagram Ref.	Part No.	Description
		RESISTORS
R1	130176	20M ohm—⅓ w.
R2	130100	150M ohm—⅓ w.
R3	130279	1M ohm—1 watt
R4	1304	3 megohm—⅓ w.
R5	101196	500M ohm volume control
R6	130293	30 ohm—1 watt
R7	130257	5 megohm—⅓ w.
R8	130288	50 ohm—1.5 watt
R9	1302	75M ohm—⅓ w.
R10	13011	250M ohm—⅓ w.
R11	130166	150 ohm—⅓ w.
		CONDENSERS
C1	131262	.00001 washer condenser (on Antenna plate)
C2	10022	.05 x 200 v.
C3	124100	Antenna Trimmer
C4	12930	.00005 Mica
C5	10091	.15 x 400 v.
C6	124100	Oscillator Trimmer
C7	10022	.05 x 200 v.
C8	11992	20 mfd. x 150 v. lytic
C9	11992	40 mfd. x 150 v. lytic
C10	10013	.05 x 400 v.
C11	12912	.00025 mica
C12	10025	.002 x 600 v.
C13	1292	.0005 mica
C14	10011	.01 x 400 v.
C15	10011	.01 x 400 v.
		C3 and C6 in one unit
		C8 and C9 in one unit
		PARTS
T1	111136B	Antenna Coil Complete
T2	110126B	Oscillator Coil
T3	108157C	Input I. F. Coil—465 kc.
T4	108157C	Output I. F. Coil—465 kc.
T5	114170	4" P. M. Speaker and Transformer
S1	101196	Off-on switch on volume control
P1	107249	6-8 v. pilot light T-47

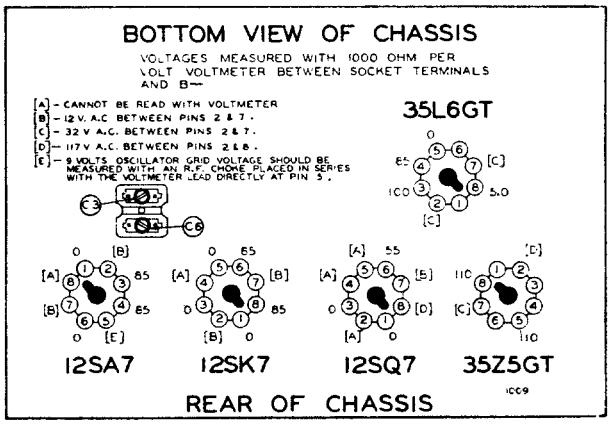

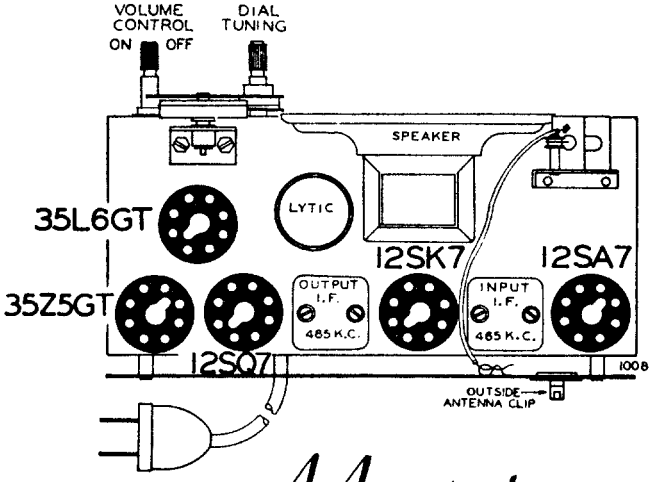

Model 518

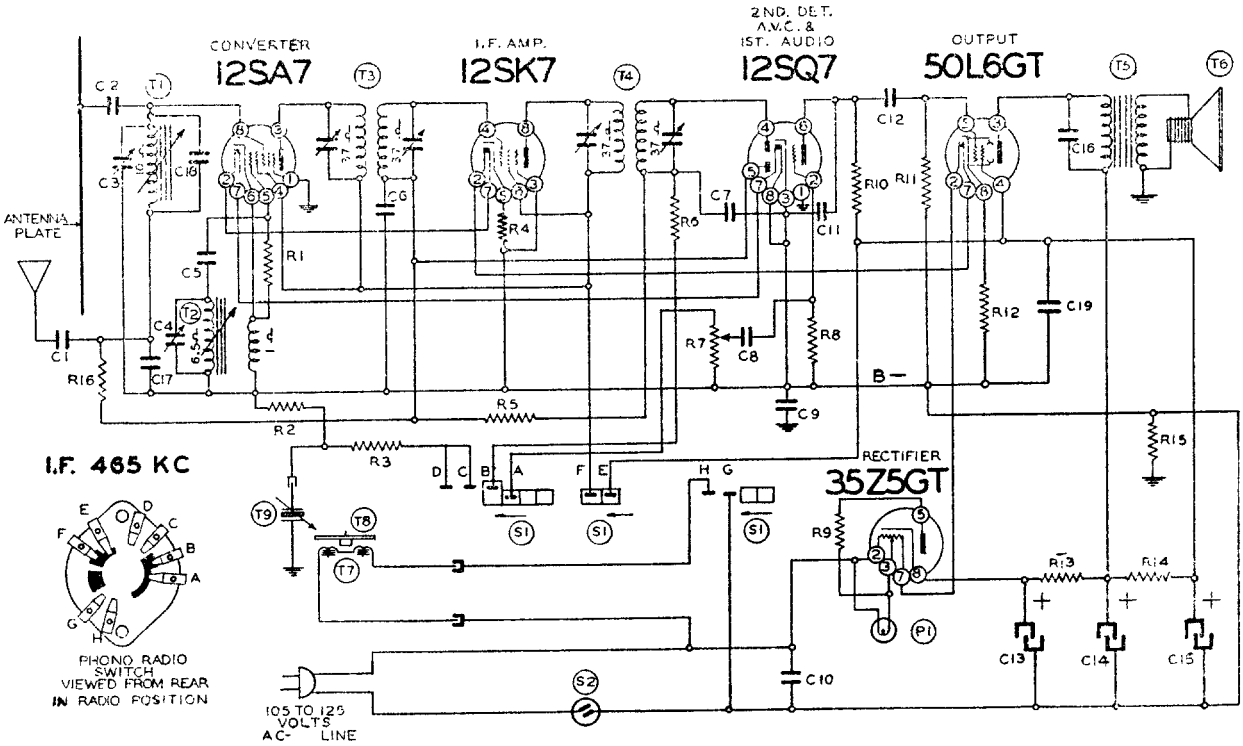

Circuit Diagram Ref. No.	Part No.	Description
		RESISTORS
R1	130176	20M ohm—⅓ w.
R2	130118	600M ohm—⅓ w.
R3	130118	600M ohm—⅓ w.
R4	13056	100 ohm—⅓ w.
R5	130170	3 megohm—⅓ w.
R6	13012	50M ohm—⅓ w.
R7	101217	½ megohm—volume control
R8	130257	5 megohm—⅓ w.
R9	130215	25 ohm—½ w.
R10	1309	200M ohm—⅓ w.
R11	13037	750M ohm—⅓ w.
R12	130166	150 ohm—⅓ w.
R13	13097	200 ohm—⅓ w.
R14	130287	1200 ohm—1 watt
R15	1309	200M ohm—⅓ w.
R16	1309	200M—⅓ w.
		CONDENSERS
C1	1295	.0001 Mica Condenser
C2	129114	.0003 mfd. mica
C3	124136	Antenna Trimmer
C4	124136	Oscillator Trimmer
C5	1295	.0001 mica
C6	1009	.05 x 200 v.
C7	1295	.0001 mica
C8	10025	.002 x 600 v.
C9	100119	.1 x 400 v.
C10	1001	.1 x 400 v.
C11	12912	.00025 mica
C12	10019	.006 x 600 v.
C13	11994	40 mfd. lytic—150 w. v.
C14	11994	20 mfd. lytic—150 w. v.
C15	11994	20 mfd. lytic—150 w. v.
C16	10011	.01 x 400 v.
C17	129162	.0008 Mica Condenser
C18	129163	.000025 Ceramicon Condenser
C19	10013	.05 x 400 v. Cond.
		C3 and C4 in same unit
		C13, C14 and C15 are in same unit
		PARTS
T1	112866	Antenna Coil—Permeability tuning assembly complete
T2	112866	Oscillator Coil
T3	108140F	Input I. F. Coil—465 kc.
T4	108145D	Output I. F. Coil—465 kc.
T5	105108	Output Transformer
T6	14198	5" P.M. Speaker
T7	104206	Phono Motor
T8	12228	Turntable
T9	114194	Phono pick up arm
S1	125113	Phono Switch
S2		Switch on volume control
P1	107249	Pilot light T47
		T1 and T2 in same unit

Belmont Radio

MODEL 533—SERIES C

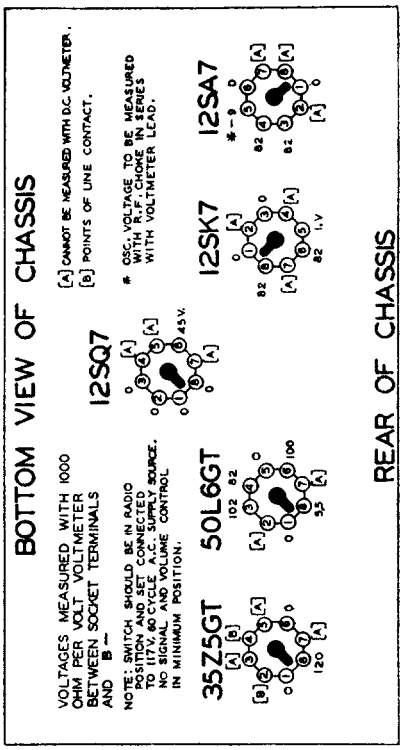

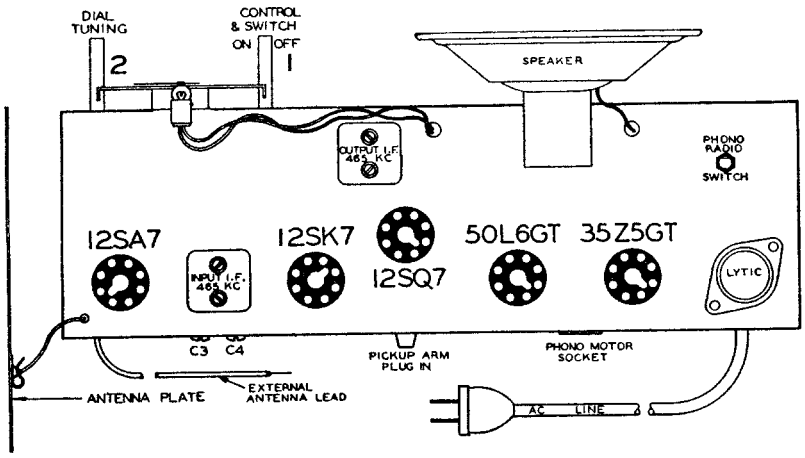

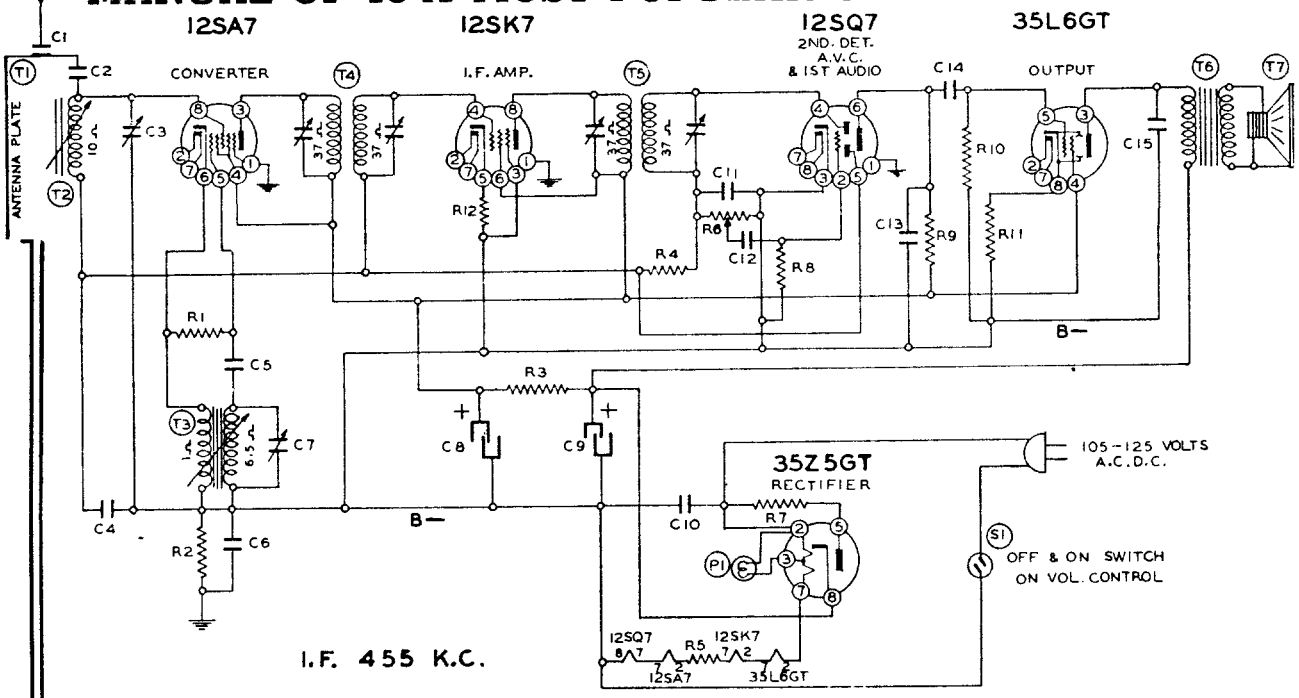

Model 536 Radio

Schematic Ref. No.	Part No.	Description
		RESISTORS
R1	130176	20M ohm—⅓ w.
R2	130100	150M ohm—⅓ w.
R3	130279	1M ohm—1 w.
R4	1304	3 megohm—⅓ w.
R5	130288	50 ohm—1.5 w.
R6	101238	500M ohm volume control and switch
R7	130240	30 ohm—⅓ w.
R8	130257	5 megohm—⅓ w.
R9	100100	150M ohm—⅓ w.
R10	13011	250M ohm—⅓ w.
R11	130166	150 ohm—⅓ w.
R12	130233	60 ohm—⅓ w.
		CONDENSERS
C1	131262	.00001 washer condenser (Antenna clip on back plate)
C2	129114	.0003 mica
C3	124151	Trimmer on antenna coil
C4	1009	.05 x 200 v.
C5	12939	.00005 mica
C6	10091	.15 x 400 v.
C7	124151	Trimmer on oscillator coil
C8	11992	20 mfd. lytic x 150 w. v.
C9	11992	40 mfd. lytic x 150 w. v.
C10	10013	.05 x 400 v.
C11	12912	.00025 mica
C12	10025	.002 x 600 v.
C13	1292	.0005 mica
C14	10011	.01 x 400 v.
C15	10011	.01 x 400 v.
		C3 and C7 are in same unit
		C8 and C9 are in same unit
		PARTS
T1	128586B	Back plate (walnut)
	128586	Back plate (ivory)
T2	112877	Antenna coil—Permeability tuning assembly complete
T3	112877	Oscillator coil—Permeability tuning assembly complete
T4	108157L	Input I. F. coil—455 Kc.
T5	108157N	Output I. F. coil—455 Kc.
T6	10595C	Output transformer
T7	114225	5" P. M. speaker
S1		Switch on volume control
P1	107249	Pilot light T47

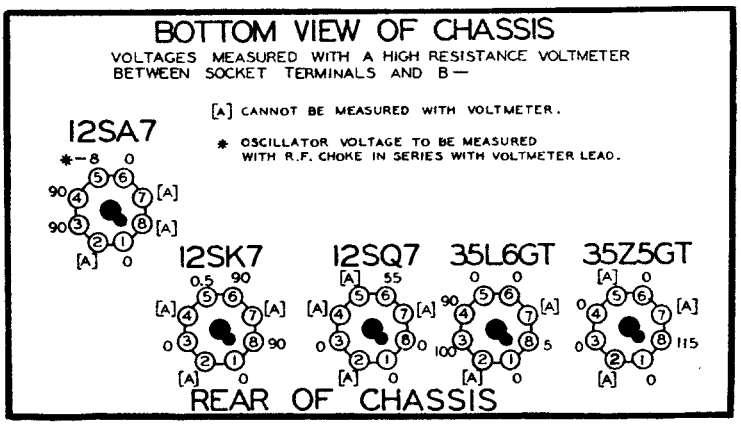

VIEW LOOKING AT BOTTOM OF CHASSIS

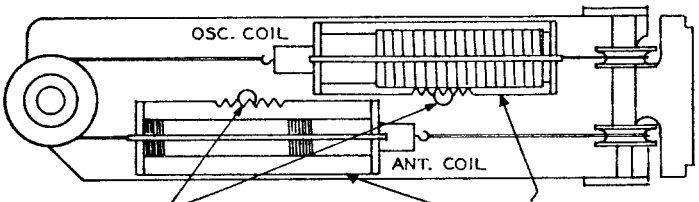

NOTE "A" THE ANTENNA COIL ASSEMBLY IS MADE SO THAT IT IS MOVABLE LEFT OR RIGHT. WHEN MAKING THE ADJUSTMENT AS GIVEN IN THE ALIGNMENT PROCEDURE MOVE THE COIL ASSEMBLY VERY SLOWLY. IT CAN BE MOVED BY HAND OR BY PIVOTING ONE EDGE OF THE BLADE OF A SCREWDRIVER IN THE HOLE AND ENGAGING THE BLADE IN THE GEAR TEETH OF THE COIL FORM.

TO ADJUST COIL ASSEMBLY MOVE LEFT OR RIGHT

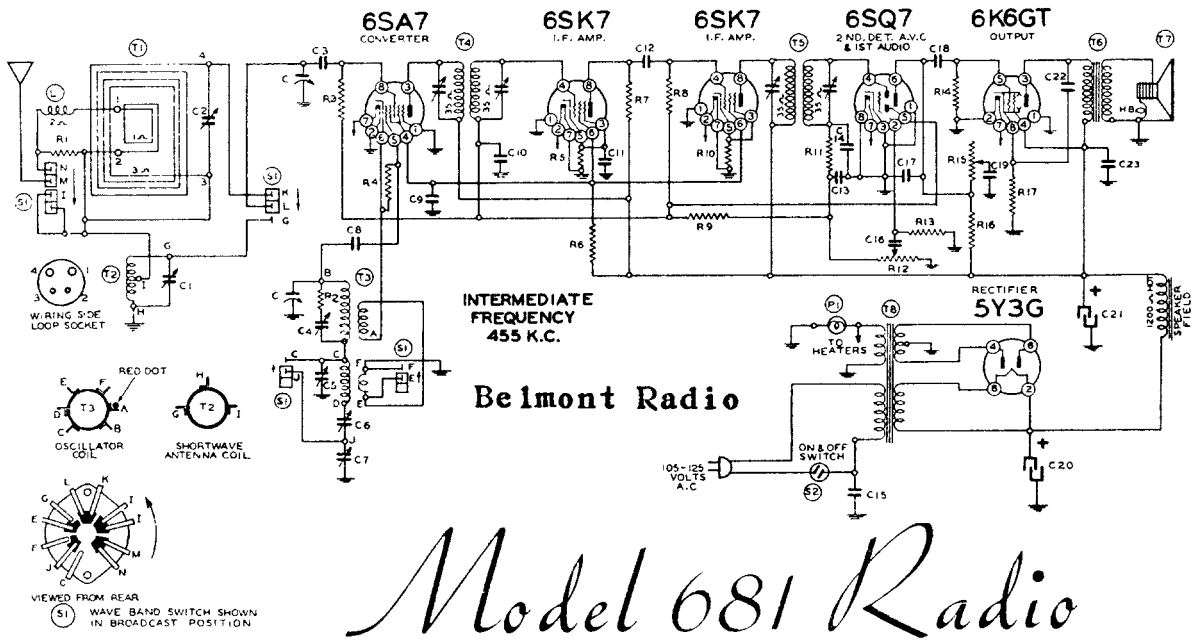

Model 681 Radio

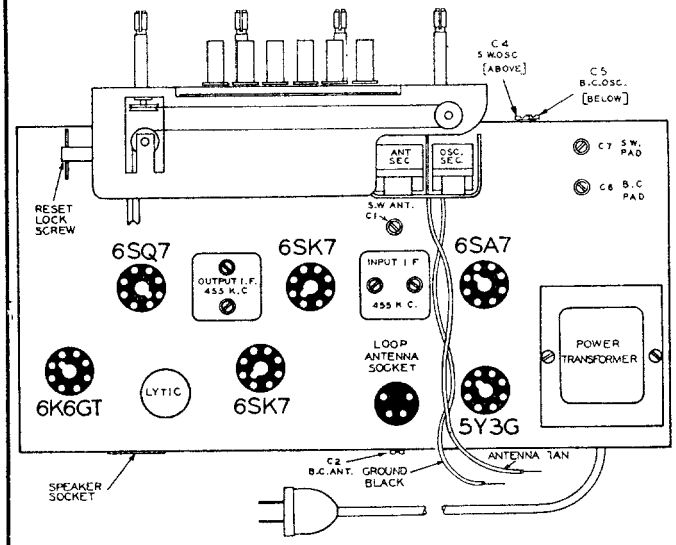

Setting the Pushbuttons

Make a list of your 6 favorite stations. Push out the call letters of these stations from the call letter sheets supplied. Insert a call letter in the front of each pushbutton.

Next push one of the pushbuttons all the way in as far as it will go and hold it there. Now tune in the station you want with the tuning knob—Tune back and forth until the station is clear and distinct, then release the button. Continue setting each pushbutton in the same way. Now rotate the tuning knob to the right (clockwise) as far as it will turn.

Looking at the back of the cabinet note the **reset lock screw** on the left hand side of the chassis, (see chassis view).

Rotate the **reset lock screw** to the **right** (clockwise) by means of the pin thru the shaft.

It is **very important** that this locking screw is **turned** until it is **absolutely tight.**

This screw will lock in place all the stations you have selected on the automatic tuner pushbuttons. Pressing the proper button will now tune the station you want.

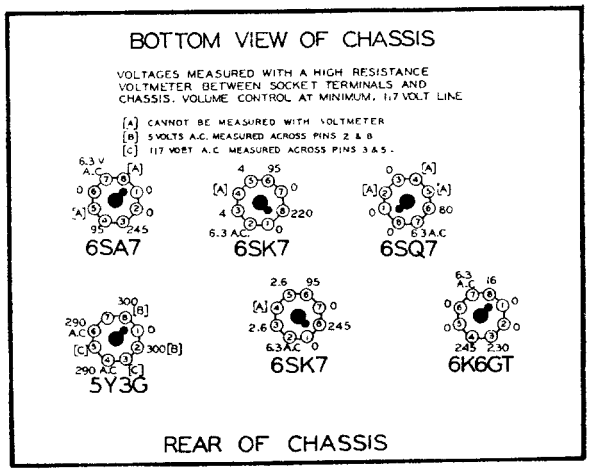

CONDENSERS

C	2 gang variable condenser
C1	S.W. antenna trimmer
C2	B.C. antenna trimmer
C3	.0005 mica
C4	S.W. oscillator trimmer
C5	B.C. oscillator trimmer
C6	B.C. padding condenser
C7	S.W. padding condenser
C8	150 mfd. mica
C9	.05 x 400 v.
C10	.05 x 200 v.
C11	.05 x 200 v.
C12	.0005 mica
C13	.0001 mica
C14	.0001 mica
C15	.02 x. 600 v.
C16	.002-x 600 v.
C17	.00025 mica
C18	.02 x 400 v.
C19	.004 x 600 v.
C20	16 mfd. x 400 w.v. lytic
C21	16 mfd. x 400 w.v. lytic
C22	.006 x 600 v.
C23	.1 x 400 v.

C4 and C5 are in same unit
C13 and C14 are in same unit
C6 and C7 are in same unit
C20 and C21 are in same unit

RESISTORS

R1	4M ohm—⅓ w.
R2	20 ohm—⅓ w.
R3	1 megohm—⅓ w.
R4	30M ohm—⅓ w.
R5	750 ohm—⅓ w.
R6	19M ohm—1½ w.
R7	5M ohm—⅓ w.
R8	100M ohm—⅓ w.
R9	3 megohm—⅓ w.
R10	350 ohm—⅓ w.
R11	50M ohm—⅓ w.
R12	1 megohm volume control
R13	10 megohm—⅓ w.
R14	500M ohm—⅓ w.
R15	1 megohm tone control
R16	250M ohm—⅓ w.
R17	500 ohm—1 w.

MANUAL OF 1941 MOST POPULAR SERVICE DIAGRAMS

Belmont Radio Model 1100

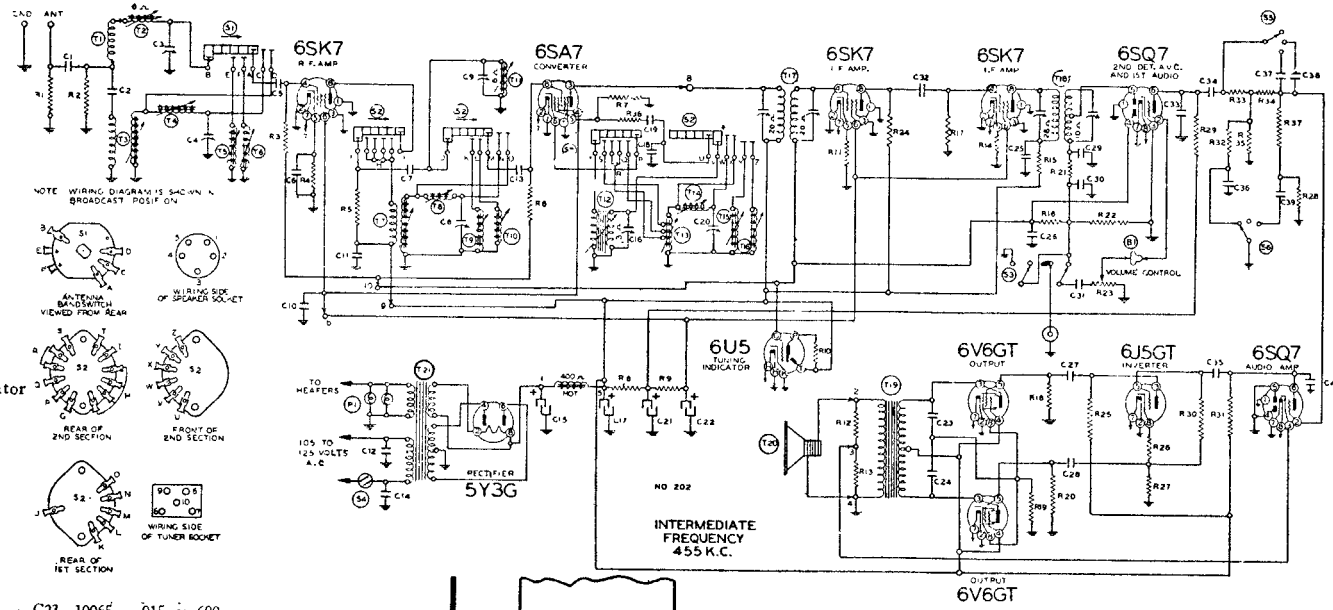

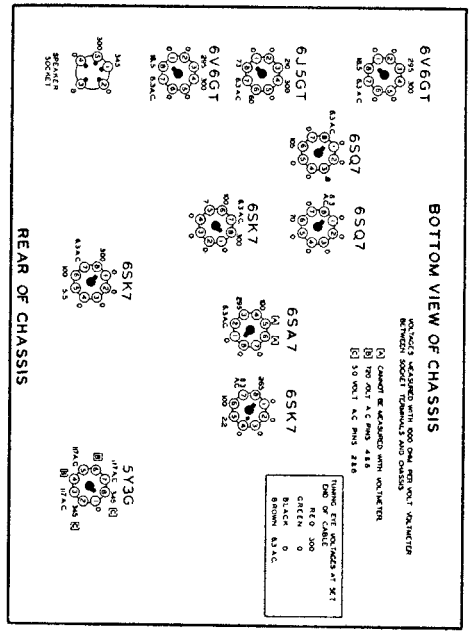

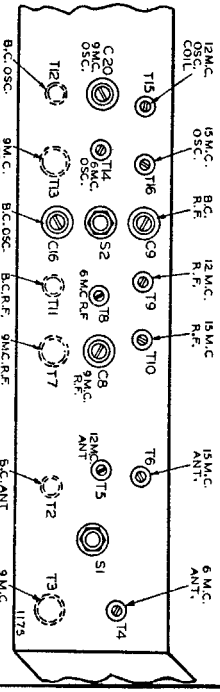

RESISTORS

R1	130232	25M ohm—⅓ w.
R2	130232	25M ohm—⅓ w.
R3	13019	1 megohm—⅓ w.
R4	130239	250 ohm—⅓ w.
R5	130218	5M ohm—⅓ w.
R6	13019	1 megohm—⅓ w.
R7	130232	25M ohm—⅓ w.
R8	130318	6M ohm—2 watt
R9	130319	10M—2 watt
R10		1 megohm in tuning indicator
R11	130200	700 ohm—⅓ w.
R12	13082	10M ohm—⅓ w.
R13	130235	1500 ohm—⅓ w.
R14	130235	1500 ohm—⅓ w.
R15	130192	2M ohm—⅓ w.
R16	13019	1 megohm—⅓ w.
R17	13020	100M ohm—⅓ w.
R18	1303	500M ohm—⅓ w.
R19	130317	250 ohm—2 watt
R20	1303	500M ohm—⅓ w.
R21	13020	100M ohm—⅓ w.
R22	130238	400M ohm—⅓ w.
R23	101234	500M ohm volume control and line switch (S4)
R24	13073	15M ohm—⅓ w.
R25	13094	50M ohm—⅓ w.
R26	130218	5M ohm—⅓ w.
R27	13094	50M ohm—⅓ w.
R28	1303	500M ohm—⅓ w.
R29	130172	250M ohm—⅓ w.
R30	1303	500M ohm—⅓ w.
R31	130172	250M ohm—⅓ w.
R32	1307	40M ohm—⅓ w.
R33	13080	150M ohm—⅓ w.
R34	130309	350M ohm—⅓ w.
R35	130172	250M ohm—⅓ w.
R36	130174	50 ohm—⅓ w.
R37	13080	150M ohm—⅓ w.

CONDENSERS

C1	1292	.0005 mica
C2	10047	.002 x 600 v.
C3	124143	B.C. Antenna Trimmer
C4	124143	9 mc. Antenna Trimmer
C5	1292	.0005 mica
C6	10020	.1 x 200 v. Tubular
C7	129168	.00001 mica
C8	124138	9 mc. R.F. Trimmer
C9	124139	B.C. R.F. Trimmer
C10	10074	.1 x 400 v.
C11	10074	.1 x 400 v.
C12	10061	.02 x 600 v.
C13	1292	.0005 mica
C14	10061	.02 x 600 v.
C15	119112	30.0 mfd. lytic
C16	124144	B.C. Oscillator Trimmer
C17	119112	30.0 mfd. lytic x 450 w.v.
C18	129167	.0002 silver mica
C19	12938	.00005 mica
C20	124145	9 mc. Oscillator Trimmer
C21	119112	10.0 mfd. lytic
C22	11969	16 mfd. x 350 w.v.
C23	10065	.015 x 600 v.
C24	10065	.015 x 600 v.
C25	1001	.1 x 400 v.
C26	10022	.05 x 200 v.
C27	10013	.05 x 400 v.
C28	1009	.05 x 200 v.
C29	129161	.0001 mica
C30	129161	.0001 mica
C31	10020	.1 x 200 v.
C32	1292	.0005 mica
C33	12912	.00025 mica
C34	1001	.1 x 400 v.
C35	10013	.05 x 400 v.
C36	100118	.008 x 600 v.
C37	12936	.0003 mica
C38	129166	.000125 mica
C39	10037	.003 x 600 v.
C40	12912	.00025 mica

C3 and C4 in same unit
C15, C17 and C21 in same unit
C29 and C30 in same unit

PARTS

T1	111207	Loop Antenna Assembly
T2	111195	B.C. Antenna Coil
T3	111190	9 mc. Antenna Coil
T4	111189	6 mc. Antenna Coil
T5	111191	12 mc. Antenna Coil
T6	111192	15 mc. Antenna Coil
T7	10959	9 mc. R.F. Coil
T8	10958	6 mc. R.F. Coil
T9	10960	12 mc. R.F. Coil
T10	10961	15 mc. R.F. Coil
T11	10962	B.C. R.F. Coil
T12	110161	B.C. Oscillator Coil
T13	110157	9 mc. Oscillator Coil
T14	110156	6 mc. Oscillator Coil
T15	110158	12 mc. Oscillator Coil
T16	110159	15 mc. Oscillator Coil

COMPILED BY M. N. BEITMAN, SUPREME PUBLICATIONS

Chevrolet Auto Radio, Model 985694

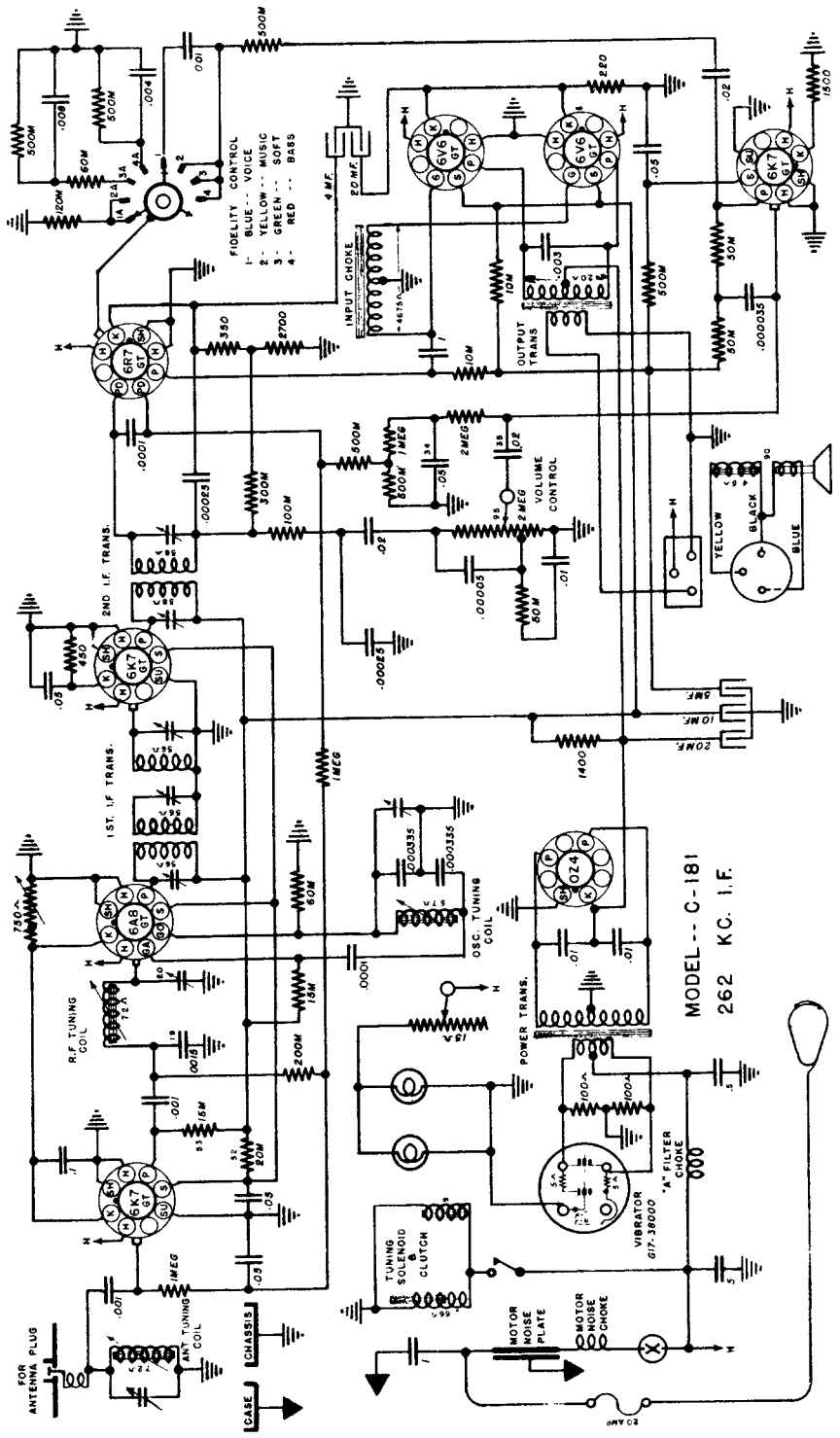

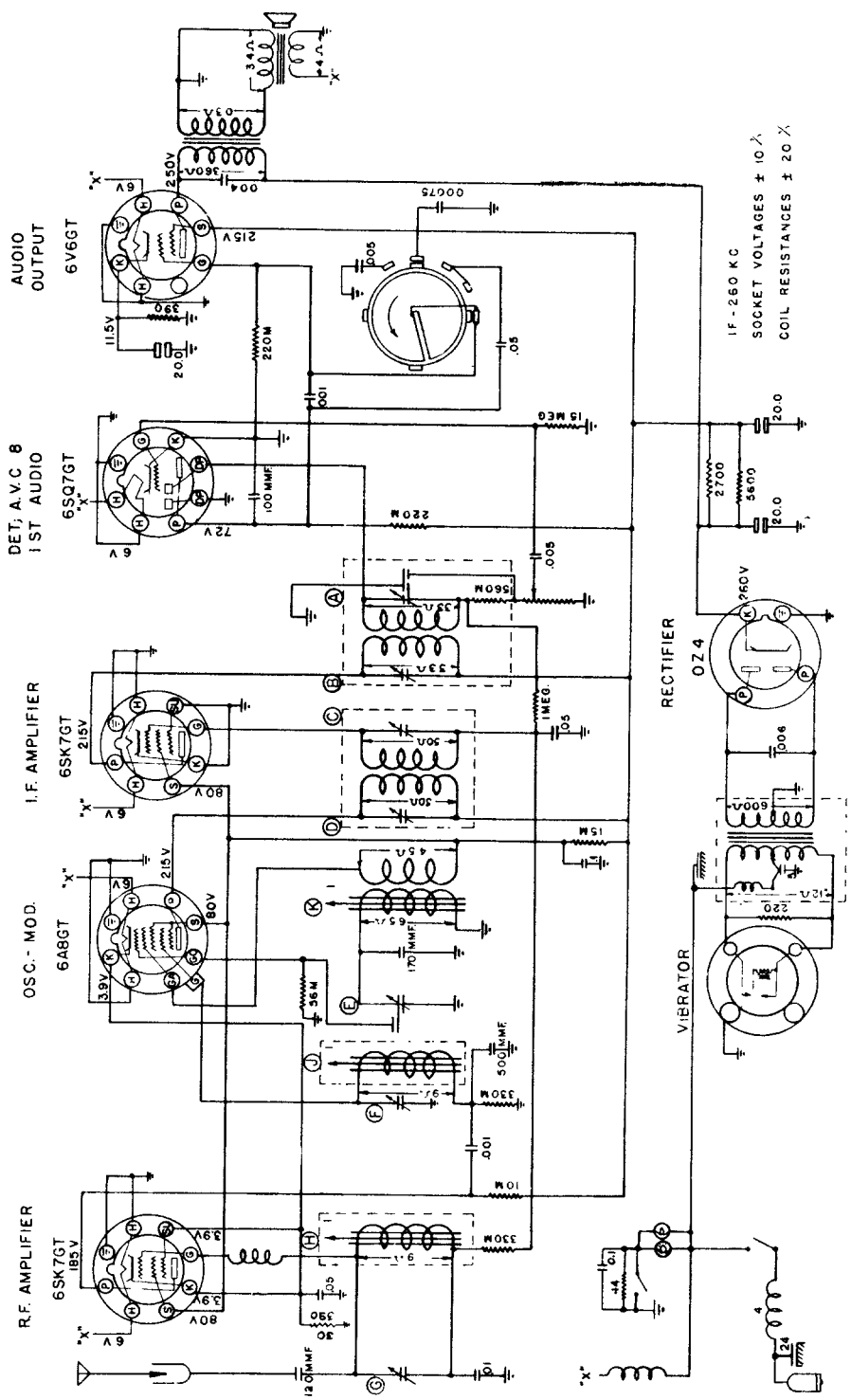

ANTENNA CIRCUIT: The antenna circuit is directly coupled to the antenna. The antenna coil is tuned by means of an iron core and the circuit is adjusted for slight variations in antenna capacity by means of an antenna trimmer located on the bottom of the receiver case.

Chevrolet Auto Radio, Model 985695

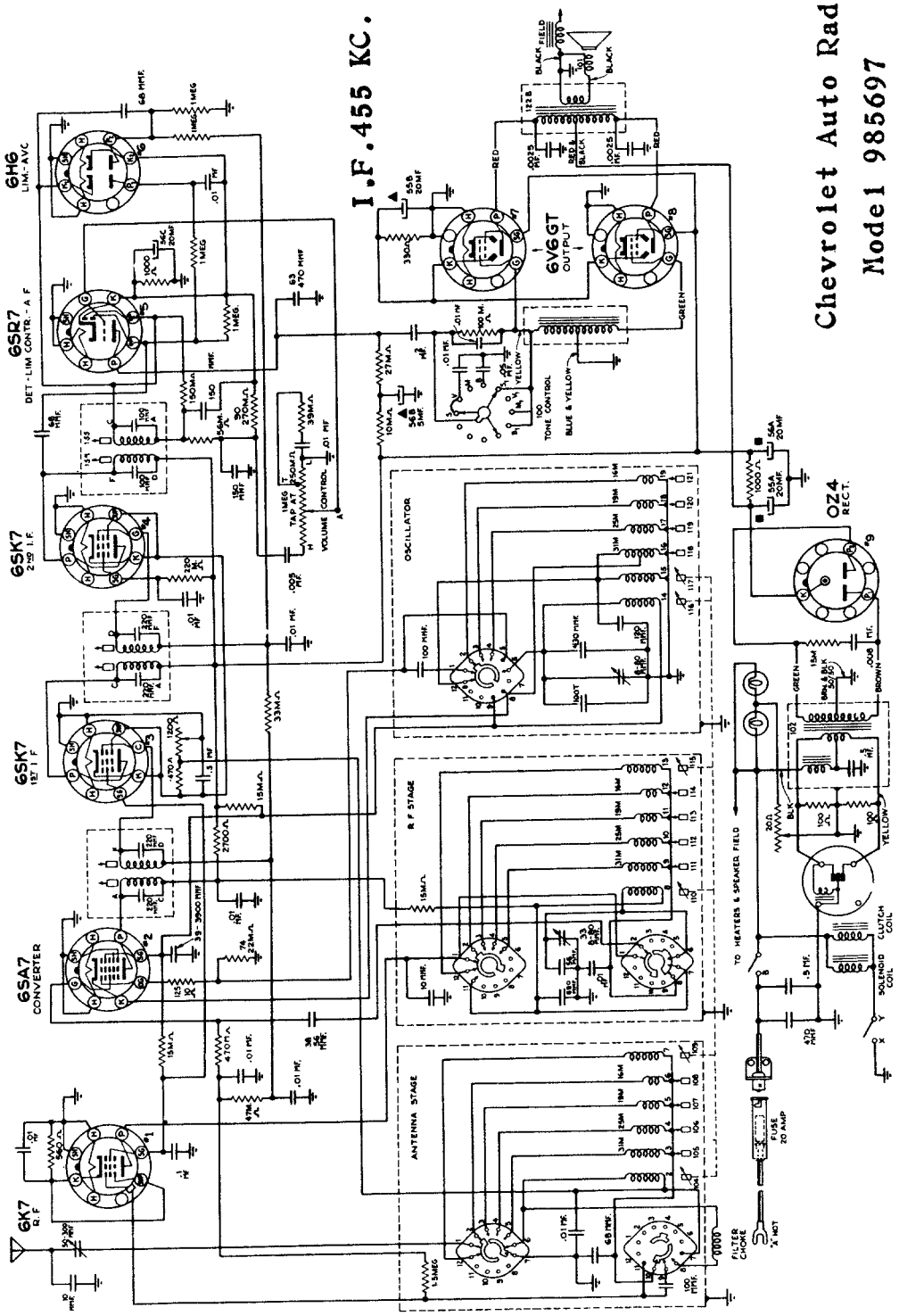

This auto radio is a nine-tube self contained receiver, built expressly for installation in 1941 Chevrolet automobiles. Special features incorporated in this receiver are: Electric tuning on five stations; push-button tone control; elliptical speaker; permeability tuning; sensitivity control; noise limiter circuit; OZ4 cold cathode rectifier, and a primary type vibrator.

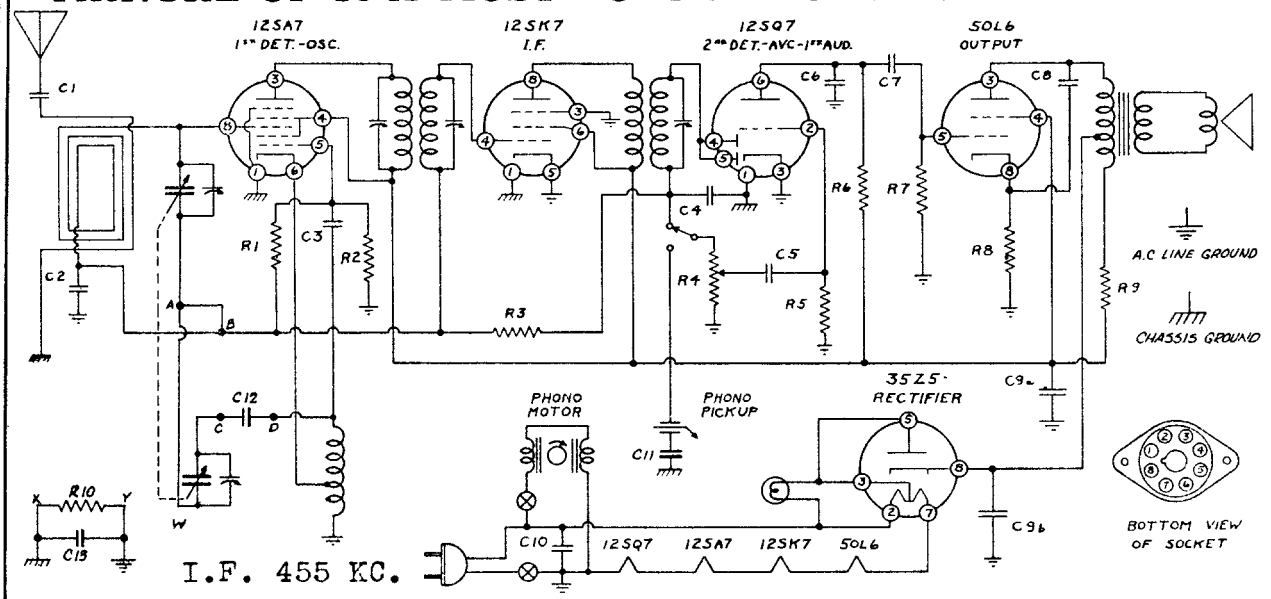

In model M5-PH only, connect points w, x, and y together. R10 and C13 are not used. Also C12 is not used, and point C connects to D. Disconnect points A and B.

RESISTORS

No.	Ohms	Watts	No.	Ohms	Watts
R1	10,000,000	¼	R6	250,000	¼
R2	25,000	¼	R7	500,000	¼
R3	2,000,000	¼	R8	150-10%	¼
R4	500,000	V.C.	R9	1,000	½
R5	5,000,000	¼	R10	150,000	½

CONDENSERS

No.	Capacity (Mfd.)	Volts	No.	Capacity (Mfd.)	Volts
C1	.001	600	C8	.02	400
C2	.05	200	C9a	50. Elect.	150
C3	.00005	Mica	C9b	30. Elect.	150
C4	.00025	Mica	C10	.05	400
C5	005	600	C11	.2	400
C6	.0005	Mica	C12	.02	400
C7	.01	400	C13	.16	200

Models M5-PH, XM5-PH, Continental Radio & Television Corp.

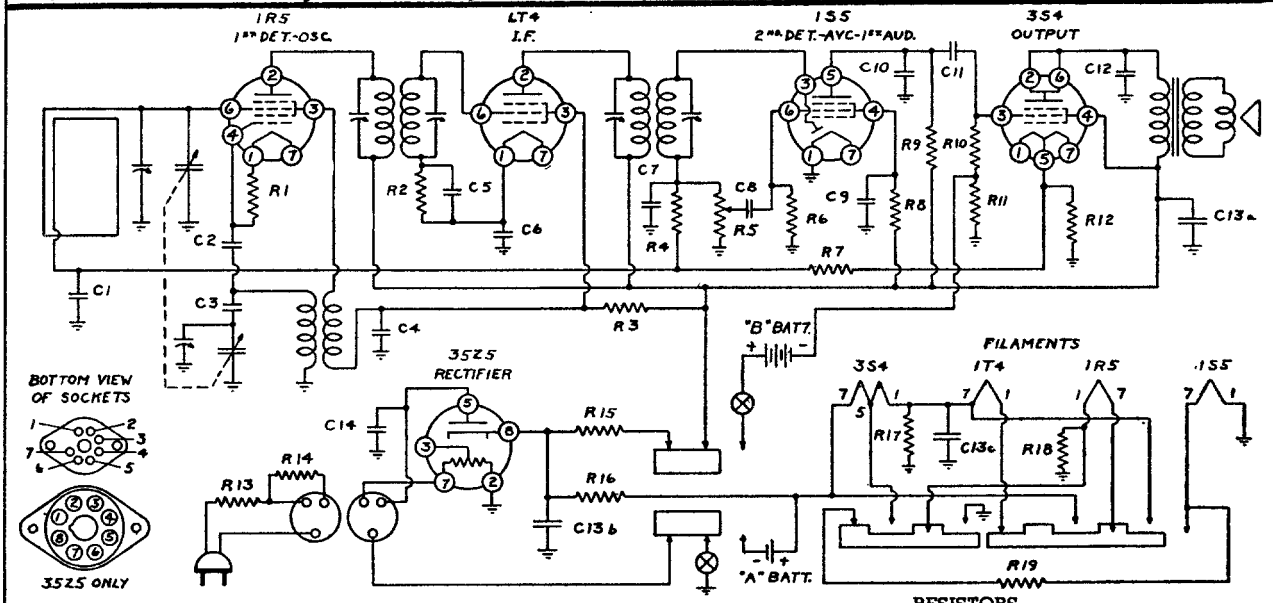

CONDENSERS

No.	Capacity (Mfd.)	Volts	No.	Capacity (Mfd.)	Volts
C1	.05	200	C9	.05	200
C2	.0001	Mica	C10	.00005	Mica
C3	.000485-2%	Mica	C11	.005	200
C4	.01	120	C12	.01	200
C5	.01	120	C13a	20.	150
C6	.1	120	C13b	30.	150
C7	.00025	Mica	C13c	100.	12
C8	.01	200	C14	.05	400

RESISTORS

No.	Ohms	Watts	No.	Ohms	Watts
R1	100,000	¼	R11	750—10%	¼
R2	5,000,000	¼	R12	3,000—10%	¼
R3	5,000—10%	¼	R13	80 } part of	
R4	2,000,000—10%	¼	R14	350 } line cord	
R5	1,000,000	V.C.	R15	2,000—10%	½
R6	10,000,000	¼	R16	1,750—10%	4
R7	3,000,000—10%	¼	R17	1,700—10%	¼
R8	4,000,000	¼	R18	1,000—10%	¼
R9	1,000,000	¼	R19	55—10% (wire wound)	½
R10	2,000,000	¼			

G5

I.F. 455 KC.

MANUAL OF 1941 MOST POPULAR SERVICE DIAGRAMS

INSTALLATION, OPERATION AND SERVICE INSTRUCTIONS FOR CROSLEY MODEL 22AS

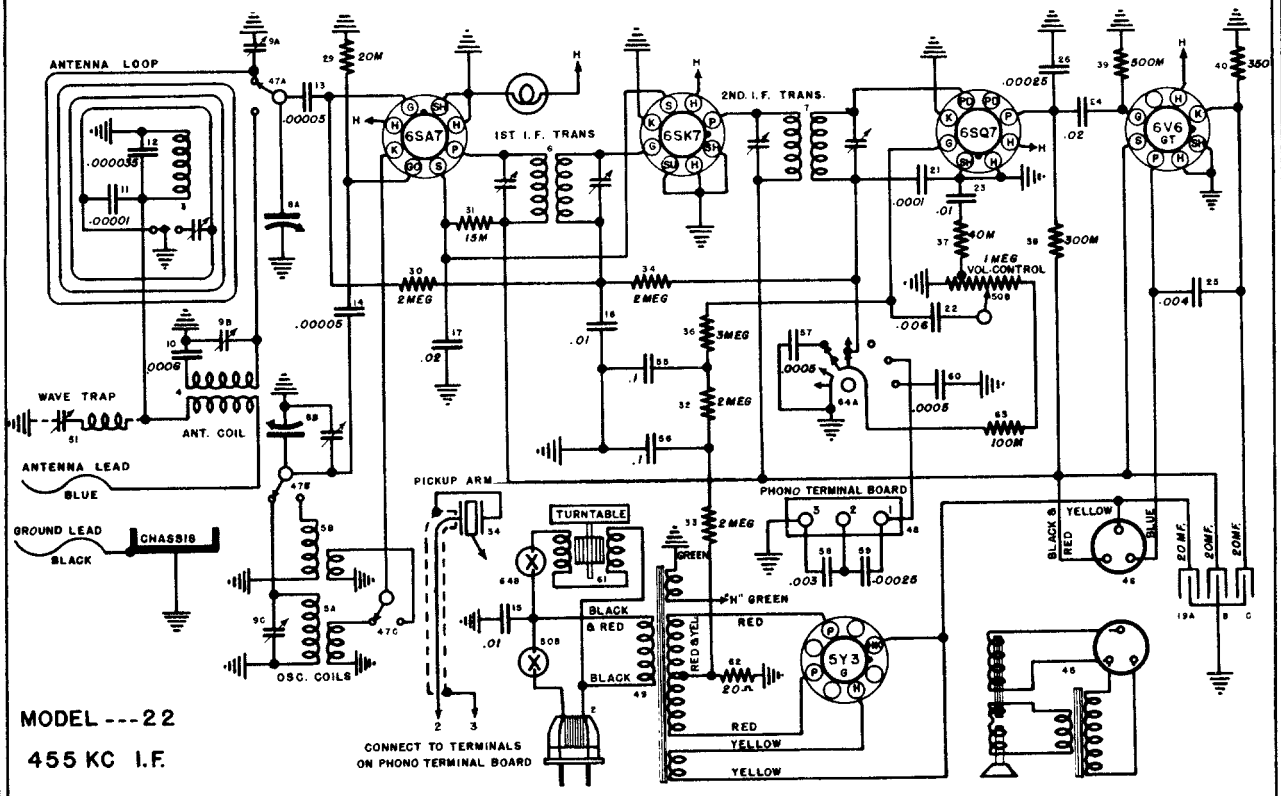

Alignment Sequence	Dummy Antenna	Frequency Setting	Input to Receiver	Band Switch	Tuning Cond. Setting	Trimmers Adjusted	Remarks
1.	.02MF.	455 Kc.	Ant. Lead (Blue)	B. C.	Fully Open	2nd I-F (2) 1st I-F (2)	Adjust for Maximum output. Adjust for Maximum output.
2.	400 ohm (carbon)	15.3 Mc.	Ant. Lead (Blue)	S. W.	Fully Open	S. W. "OSC" (on gang)	Adjust for Peak. See foot note.
3.	400 ohm (carbon)	15.0 Mc.	Ant. Lead (Blue)	S. W.	Approx. 15 on dial	S. W. "ANT" center trimmer on right end	Adjust for Maximum while rocking gang back and forth.
4.	.0002 MF.	1650 Kc.	Ant. Lead (Blue)	B. C.	Fully Open	B. C. "OSC" front trimmer on right end	Adjust for peak. Make sure the switch on loop is in B. C. position.
5.	.0002 MF.	1400 Kc.	Ant. Lead (Blue)	B. C.	Approx. 140 on dial	B. C. "ANT" rear trimmer on right end	Adjust for Maximum output.
6.	.0002 MF.	2.5 Mc.	Ant. Lead (Blue)	B. C. and switch on loop to Pol.	Approx. 2.5 on dial lower right corner	Pol. Ant on loop	Adjust for Maximum output.

VOLTAGE. CHART

ALL VOLTAGES MEASURED FROM SOCKET PIN TO CHASSIS @ 117.5 VOLT LINE

TUBE SECTION	SOCKET PIN NUMBER 1	2	3	4	5	6	7	8
6SA7—Osc.-Mod.	0	0	225	74	0	0	6.3 A.C.	0
6SK7—I. F. Amp.	0	0	0	0	0	74	6.3 A.C.	225
6SQ7—Det. A.V.C.—1st A.F.	0	0	0	0	0	100	6.3 A.C.	0
6V6GT—Output	0	0	209	225	0	0	6.3 A.C.	10.5
5Y3G—Rectifier	0	5.0 A.C.	0	316 A.C.	0	316 A.C.	0	283

All voltages measured with 1000 OHM/Volt Voltmeter except heaters. Voltages may vary 10% of values given.

DROP ACROSS SPEAKER FIELD ..... 58 Volts
MAXIMUM POWER OUTPUT @ 130 V. LINE ..... 6.5 Watts

COMPILED BY M. N. BEITMAN, SUPREME PUBLICATIONS

THE CROSLEY AUTOMATIC WIRELESS RECORD PLAYER MODEL CR26

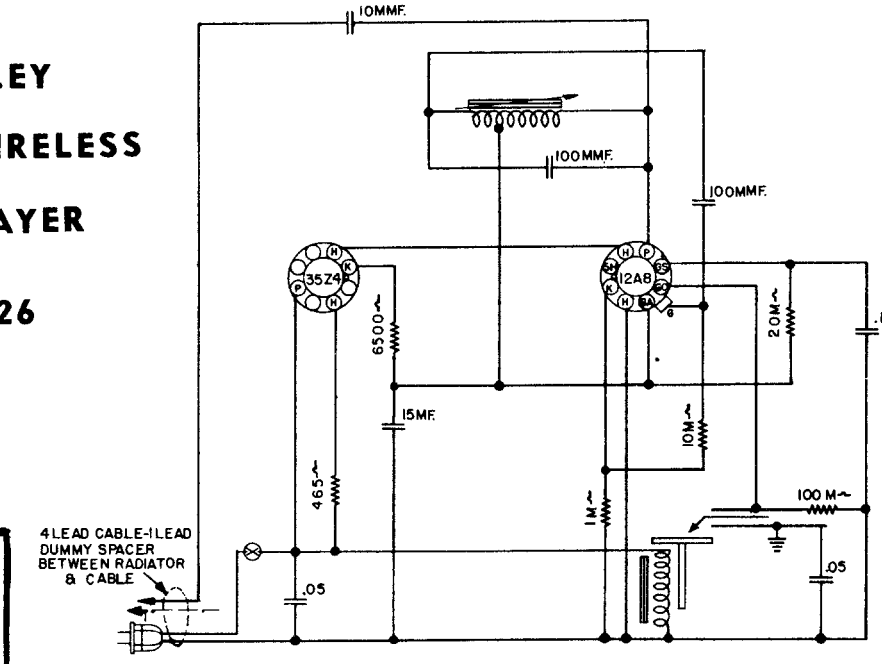

MODEL 27 CHASSIS

ALIGNMENT PROCEDURE Volume Control on full Output meter connected to Plate and Screen of 1T5GT

SIGNAL GENERATOR FREQUENCY SETTING	SIGNAL GENERATOR CONNECTION TO RADIO	DUMMY ANTENNA	TUNING COND. SETTING	TRIMMERS TO ADJUST	REMARKS
455 Kc	Grid 1A7GT	.02 MF	Fully open	2nd 1-F (1) located on front	Adjust for maximum signal.
455 Kc	Grid 1A7GT	.02 MF	Fully open	chassis flange 1st 1-F (2)	Adjust for maximum signal. Located top of 1st 1-F ass'y.
1650	Ant. Lead	.0001 MF	Approx. 140	"OSC" Shunt on gang	Adjust for maximum output. Gang does not have to tune through signal.
1400	Ant. Lead	.0001 MF	on dial	"ANT" shunt on loop ant. through hole in right side of cabinet	Adjust for maximum output.

Repeat above for more accurate adjustments
Maximum power output @ 75 V. "B" — approx. 200 M. W.
Maximum power output @ 90 V. "B" — approx. 340 M. W.
Maximum power output @ 90 V. "B" — approx. 200 M. W. undistorted

A Battery drain @ 6 volts, .05 Amp.; "B" Battery drain @ 75 V., 9 M. A.; @ 90 V., 12 M. A.
Power consumption @ 117.5 volts line—30 Watts

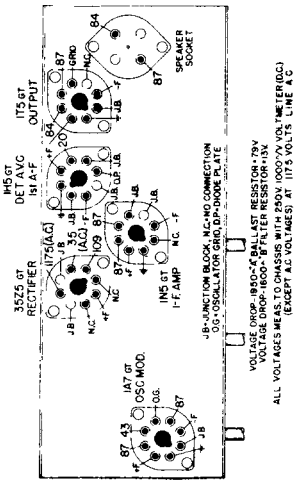

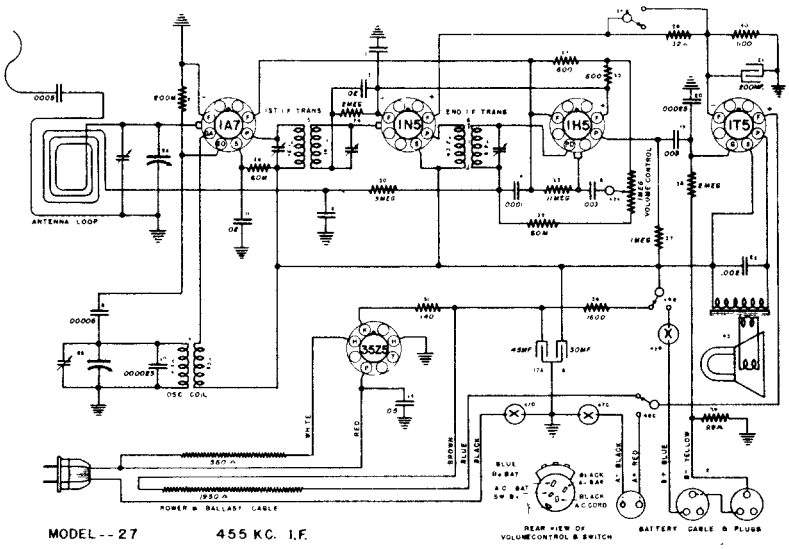

MODEL--27 455 KC. I.F.

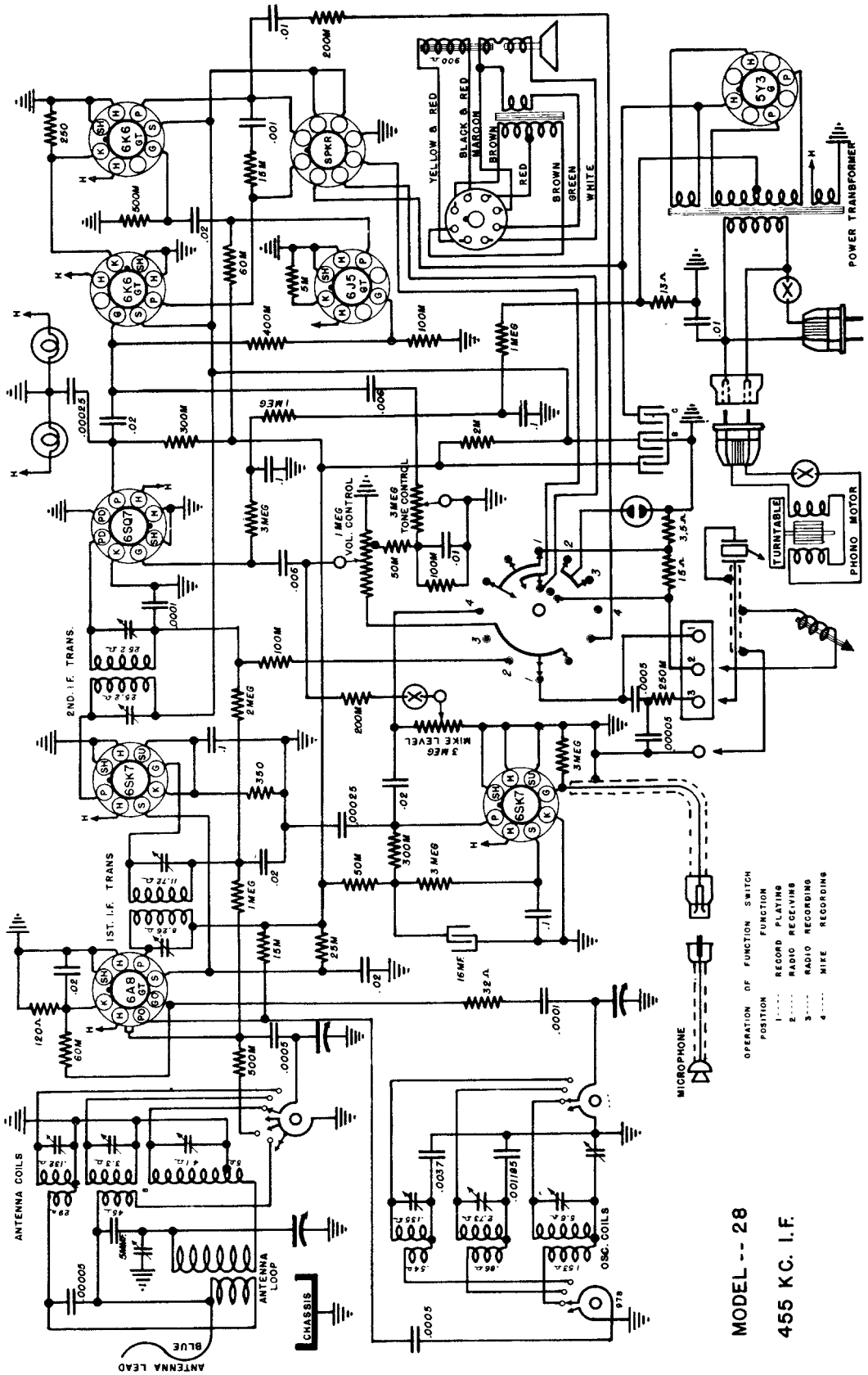

Model 28

The Crosley Corporation
Cincinnati, Ohio

MODEL -- 28

455 KC. I.F.

CROSLEY MODEL 29 CHASSIS

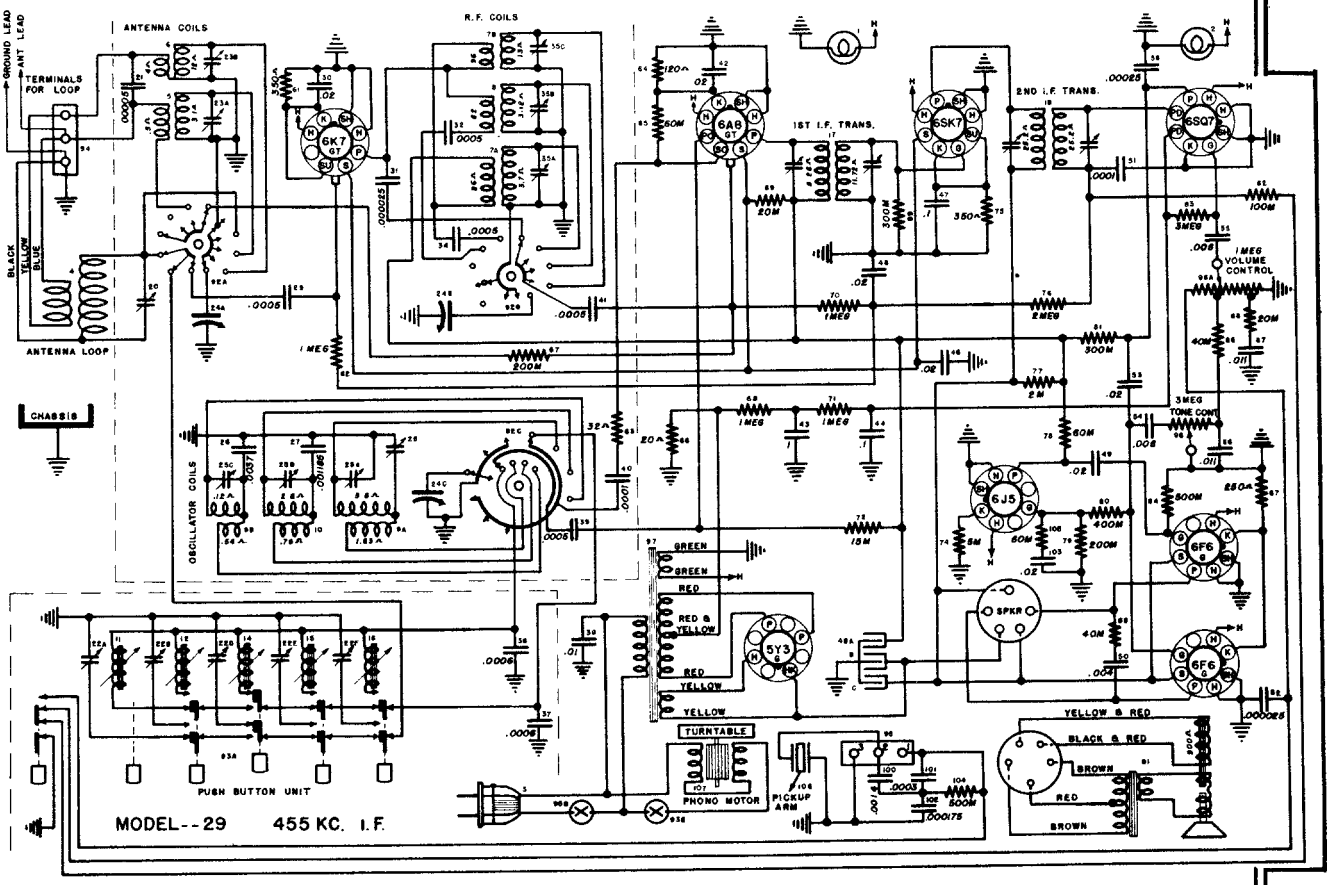

ALIGNMENT PROCEDURE CHART

Signal Generator

Alignment Sequence	Dummy Antenna	Frequency Setting	Input Connection to Receiver	Band Switch	Tuning Cond. Setting	Trimmer Adjusted	Remarks
1.	.02 MF.	455 Kc.	Grid of 6A8GT	B. C.	Fully open	2nd I-F (2) 1st I-F (2)	Adjust for Maximum. Adjust for Maximum.
2.	.0002 MF.	1650 Kc.	Ant. Lead (Blue)	B. C.	Fully open	B. C. "OSC" Trimmer	Adjust for peak; gang does not have to tune thru signal.
3.	.0002 MF.	600 Kc.	Ant. Lead (Blue)	B. C.	Approx. 60 on dial	B. C. "OSC" Series Trimmer	Adjust for maximum output while rocking gang thru signal.
4.	Repeat Step No. 2 to check possible shift due to series adjustment						
5.	.0002 MF.	1400 Kc.	Ant. Lead (Blue)	B. C.	Approx. 140 on dial	B. C. "ANT" Trimmer B. C. R-F Trimmer	Adjust for maximum output to not touch B. C. Osc. Trimmer. Adjust for maximum output.
6.	400 ohm (carbon)	5.3 Mc.	Ant. Lead (Blue)	Police	Fully open	Pol "OSC"	Adjust for peak gang; does not have to tune thru signal.
7.	400 ohm (carbon)	5.0 Mc.	Ant. Lead (Blue)	Police	Approx. 5.0	Pol "ANT" and R-F Trimmers	Adjust for maximum output while rocking gang thru signal.
8.	400 ohm (carbon)	18.3 Mc.	Ant. Lead (Blue)	S. W.	Fully open	S. W. "OSC"	Adjust for peak. Gang does not have to tune thru signal.
9.	400 ohm (carbon)	18.0 Mc.	Ant. Lead (Blue)	S. W.	Approx. 18	S. W. "ANT" and R-F Trimmers	Adjust for maximum output while rocking gang thru signal.

THE CROSLEY CORPORATION • CINCINNATI, OHIO, U. S. A.

COMPILED BY M. N. BEITMAN, SUPREME PUBLICATIONS

CROSLEY MODEL J30BC

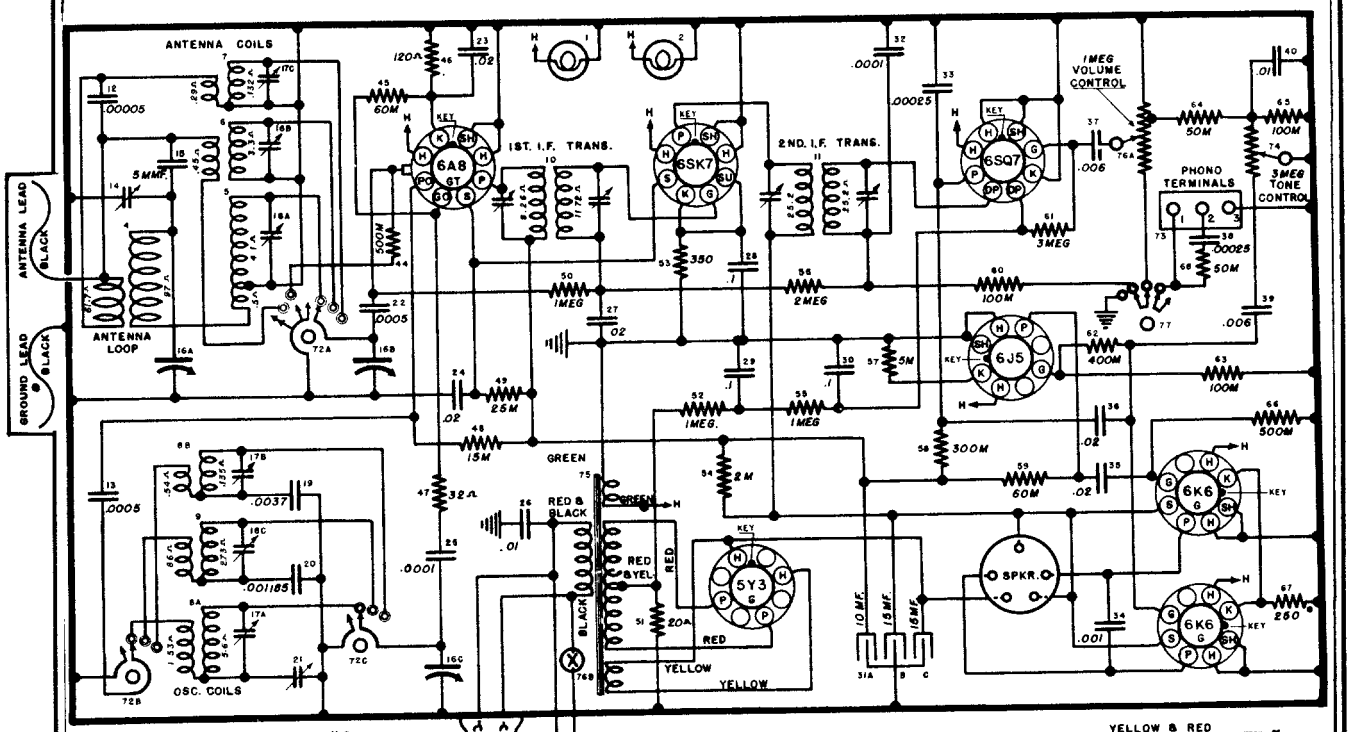

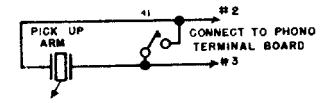

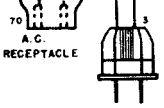

MODEL -- 30
455 K.C. I.F.

FOR TELELEVISION SOUND OR F.M SOUND USE TERMINALS NO 1 & 3 OF PHONO TERMINAL BOARD, WITH PHONO-RADIO SWITCH IN PHONO POSITION

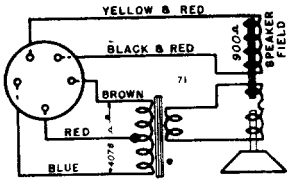

Alignment Sequence	Dummy Antenna	Frequency Setting	Input Connection to Receiver	Band Switch	Tuning Cond. Setting	Trimmer Adjusted	Remarks
1.	.02 MF.	455 Kc.	Grid of 6A8GT	B. C.	Fully open	2nd I-F (2) 1st I-F (2)	Adjust for Maximum. Adjust for Maximum.
2.	.0002 MF.	1650 Kc.	Ant. Lead (Blue)	B. C.	Fully open	B. C. "OSC" Trimmer	Adjust for peak; gang does not have to tune thru signal.
3.	.0002 MF.	600 Kc.	Ant. Lead (Blue)	B. C.	Approx. 60 on dial	B. C. "OSC" Series Trimmer	Adjust for maximum output while rocking gang thru signal.
4.	Repeat Step No. 2 to check possible shift due to series adjustment						
5.	.0002 MF.	1400 Kc.	Ant. Lead (Blue)	B. C.	Approx. 140 on dial	B. C. "ANT" Trimmer B. C. "PRE" Trimmer	Adjust for maximum output; do not touch B. C. Osc. Trimmer. Adjust for maximum output.
6.	400 ohm (carbon)	5.3 Mc.	Ant. Lead (Blue)	Police	Fully open	Pol "OSC"	Adjust for peak; gang does not have to tune thru signal.
7.	400 ohm (carbon)	5.0 Mc.	Ant. Lead (Blue)	Police	Approx. 5.0	Pol "ANT"	Adjust for maximum output while rocking gang thru signal.
8.	400 ohm (carbon)	18.3 Mc.	Ant. Lead (Blue)	S. W.	Fully open	S. W. "OSC"	Adjust for peak. Gang does not have to tune thru signal.
9.	400 ohm (carbon)	18.0 Mc.	Ant. Lead (Blue)	S. W.	Approx. 18	S. W. "ANT"	Adjust for maximum output while rocking gang thru signal.

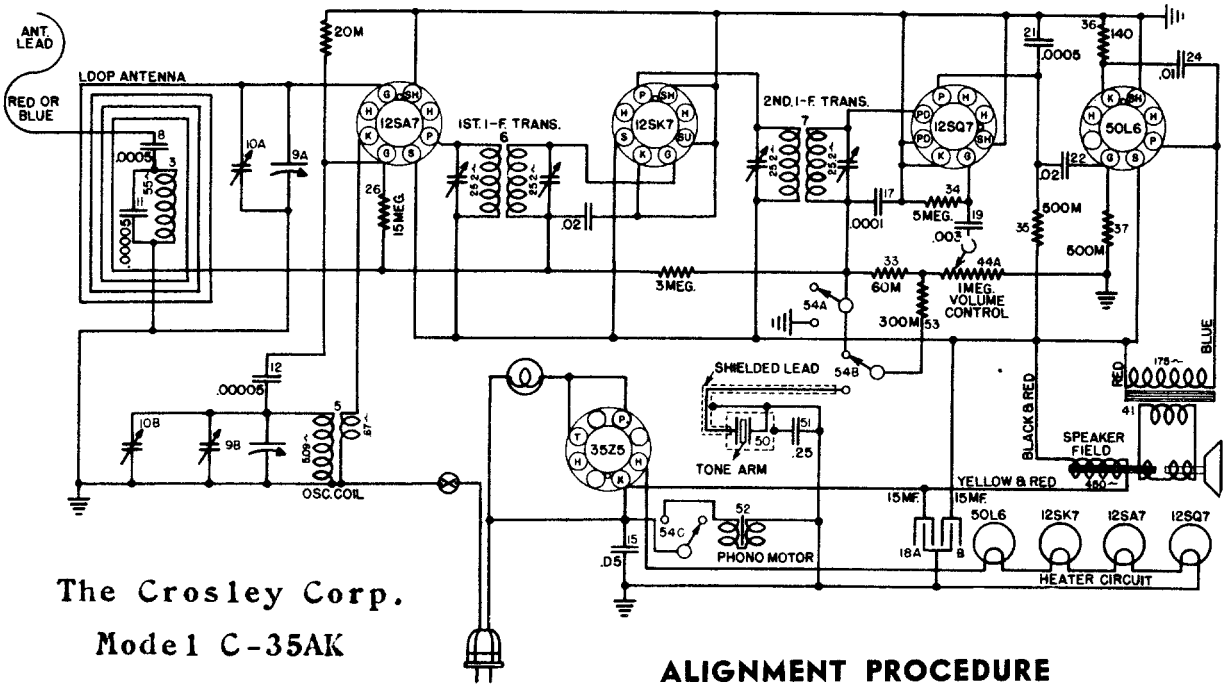

The Crosley Corp.

Model C-35AK

ALIGNMENT PROCEDURE

The chassis of this receiver is connected to one side of the power supply and for this reason all test equipment should be thoroughly insulated in order that the power supply will not become short circuited while aligning the receiver.

CONNECTING OUTPUT METER

Connect one terminal of the output meter to the plate and the other terminal to the screen of the 50L6GT output tube. Be certain that the meter is protected from D.C. by connecting a condenser (.1 mfd. or larger—not electrolytic) in series with one of the leads.

TUNING I-F AMPLIFIER TO 455 KILOCYCLES

(a) Connect the output of the signal generator through a 100 mmf. condenser to the antenna connection (Blue or Red lead extending from rear of loop) on the receiver. Do not use a ground return from the signal generator unless it is found to be absolutely necessary. If it is found to be necessary, a small condenser (approximately .001 mfd.) should be connected in series with the ground terminal of the signal generator and the receiver chassis.

(b) Set the station selector so that the plates of the condenser gang are completely out of mesh and turn the volume control to the right (ON).

(c) Set the signal generator to 455 kilocycles.

(d) Adjust the 2nd I-F trimmer condensers located on top 2nd I-F Assm. item 7, for maximum reading on the output meter.

(e) Adjust the 1st I-F trimmer condensers, located on top of 1st I-F assy., item 6, for maximum output.

(f) Repeat operations (d) and (e) for more accurate adjustments.

ALWAYS USE THE LOWEST SIGNAL GENERATOR OUTPUT THAT WILL GIVE A REASONABLE READING ON THE OUTPUT METER.

ALIGNING THE R-F AMPLIFIER

(a) Set the signal generator to 1650 kilocycles.

(b) With the condenser gang turned to the minimum capacity position, adjust the trimmer condenser B. C. "OSC" so that the 1650 kilocycle signal is heard. It is not necessary that the receiver tunes through this signal.

(c) Set the signal generator to 1400 kilocycles.

(d) Tune-in the 1400 kilocycle signal in the region of 140 on the dial for maximum output.

(e) Adjust the trimmer condensers B. C. "ANT" for maximum output.

NOTE: Do not readjust the "OSC" trimmer.

(f) Repeat operations (d) and (e) for more accurate adjustments.

MANUAL OF 1941 MOST POPULAR SERVICE DIAGRAMS

INSTRUCTIONS FOR MODEL 33BG

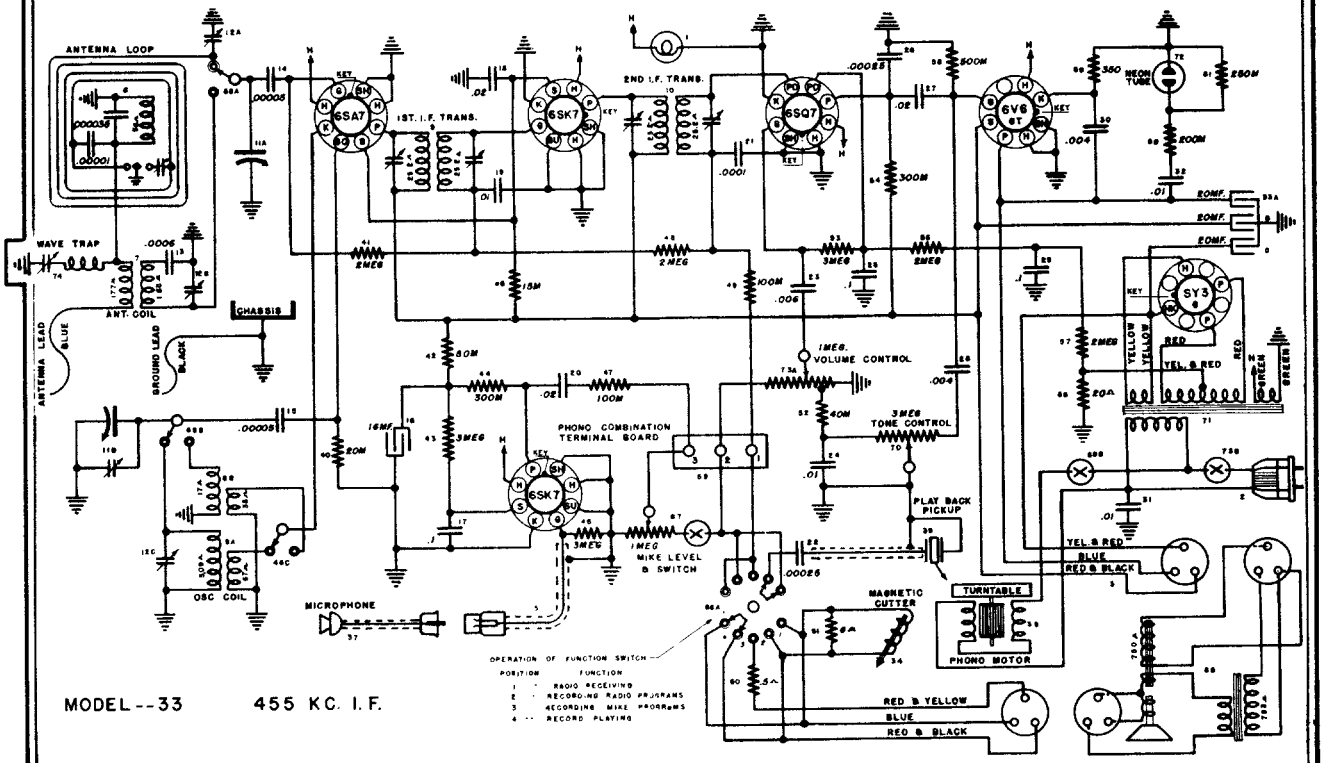

Alignment Sequence	Dummy Antenna	Frequency Setting	Input to Receiver	Band Switch	Tuning Cond. Setting	Trimmers Adjusted	Remarks
1.	.02MF.	455 Kc.	Ant. Lead (Blue)	B. C.	Fully Open	2nd I-F (2) 1st I-F (2)	Adjust for Maximum output. Adjust for Maximum output.
2.	400 ohm (carbon)	15.3 Mc.	Ant. Lead (Blue)	S. W.	Fully Open	S. W. "OSC" (on gang)	Adjust for Peak. See foot note.
3.	400 ohm (carbon)	15.0 Mc.	Ant. Lead (Blue)	S. W.	Approx. 15 on dial	S. W. "ANT" center trimmer on right end	Adjust for Maximum while rocking gang back and forth.
4.	.0002 MF.	1650 Kc.	Ant. Lead (Blue)	B. C.	Fully Open	B. C. "OSC" front trimmer on right end	Adjust for peak. Make sure the switch on loop is in B. C. position.
5	.0002 MF.	1400 Kc.	Ant. Lead (Blue)	B. C.	Approx. 140 on dial	B. C. "ANT" rear trimmer on right end	Adjust for Maximum output.
6	.0002 MF.	2.5 Mc.	Ant. Lead (Blue)	B. C. and switch on loop to Pol	Approx. 2.5 on dial lower right corner	Pol. Ant on loop	Adjust for Maximum output.

VOLTAGE CHART

ALL VOLTAGES MEASURED FROM SOCKET PIN TO CHASSIS @ 117.5 VOLT LINE

TUBE SECTION	SOCKET PIN NUMBER 1	2	3	4	5	6	7	8
6SA7—Osc.-Mod.	0	0	225	74	0	0	6.3	0
6SK7—I. F. Amp.	0	0	0	0	0	74	6.3	225
6SQ7—Det. A.V.C.—1st A.F.	0	0	0	0	0	100	6.3	0
6V6GT—Output	0	0	209	225	0	0	6.3	10.5
6SK7—Mike Amp.	0	0	0	0	0	+	6.3	+
5Y3G—Rectifier	0	5.0	0	316 A.C.	0	316 A.C.	0	283

All voltages measured with 1000 OHM/Volt Voltmeter except heaters. Voltages may vary 10% of values given.

DROP ACROSS SPEAKER FIELD..... 58 Volts
MAXIMUM POWER OUTPUT @ 130 V. LINE..... 6.5 Watts
MAXIMUM POWER CONSUMPTION @ 130 V. LINE..... *60 Watts

*Phono Motor 40 Watts additional.

MANUAL OF 1941 MOST POPULAR SERVICE DIAGRAMS

INSTRUCTIONS FOR MODEL 34BH

RADIO RECEIVER ALIGNMENT PROCEDURE

Preliminary

Output Meter Connections.....Plate to Plate of 6K6's
Generator Ground Connection.....To chassis or Ground Lead
Dummy Antenna to be in series with generator output.....See Chart Below
Position of Volume Control.....Fully On
Position of Tone Control.....Treble or Speech
Position of Function Switch.....Radio
Position of Mike Level Control.....All the Way to Left (Off)

Alignment Sequence	Dummy Antenna	Frequency Setting	Input Connection to Receiver	Band Switch	Tuning Cond. Setting	Trimmer Adjusted	Remarks
1.	.02 MF.	455 Kc.	Grid of 6A8GT	B. C.	Fully open	2nd I-F (2) 1st I-F (2)	Adjust for Maximum. Adjust for Maximum.
2.	.0002 MF.	1650 Kc.	Ant. Lead (Blue)	B. C.	Fully open	B. C. "OSC" Trimmer	Adjust for peak; gang does not have to tune thru signal.
3.	.0002 MF.	600 Kc.	Ant. Lead (Blue)	B. C.	Approx. 60 on dial	B. C. "OSC" Series Trimmer	Adjust for maximum output while rocking gang thru signal.
4.	Repeat Step No. 2 to check possible shift due to series adjustment						
5.	.0002 MF.	1400 Kc.	Ant. Lead (Blue)	B. C.	Approx. 140 on dial	B. C. "ANT" Trimmer B. C. "R-F" Trimmer	Adjust for maximum output. Do not touch B. C. Osc. Trimmer. Adjust for maximum output while rocking gang thru signal.
6.	400 ohm (carbon)	5.3 Mc.	Ant. Lead (Blue)	Police	Fully open	Pol "OSC"	Adjust for peak; gang does not have to tune thru signal.
7.	400 ohm (carbon)	5.0 Mc.	Ant. Lead (Blue)	Police	Approx. 5.0	Pol "ANT" and "R-F" Trimmers	Adjust for maximum output while rocking gang thru signal.
8.	400 ohm (carbon)	18.3 Mc.	Ant. Lead (Blue)	S. W.	Fully open	S. W. "OSC"	Adjust for peak. Gang does not have to tune thru signal.
9.	400 ohm (carbon)	18.0 Mc.	Ant. Lead (Blue)	S. W.	Approx. 18	S. W. "ANT" and "R-F" Trimmers	Adjust for maximum output while rocking gang thru signal.

When aligning the shortwave bands "OSC" trimmers care must be exercised to see that the circuits are aligned on the correct frequency and not on the image which is approximately 910 kilocycles less **as indicated on the dial.** To check, increase generator output, tune-in the generator frequency and then tune-in the image frequency which should be weaker than the fundamental and come in approximately 910 kilocycles **lower on the dial** than the fundamental. If image cannot be tuned-in, the "OSC" trimmer is adjusted to the wrong peak. (Correct peak is the second peak on trimmer from the closed position).

Repeat the original alignment procedure for more accurate adjustments. Always keep signal generator output as low as possible to prevent action of the A.V.C. circuit.

SOCKET VOLTAGES MEASURED @ 117.5 VOLTS LINE (BETWEEN SOCKET PIN AND CHASSIS) WITH 1000 OHM PER VOLT, 500 VOLT RANGE VOLTMETER (D. C.)

		SOCKET PIN NUMBER							
TUBE	FUNCTION	1	2	3	4	5	6	7	8
6K7GT	R-F Amp.	.....	.....	195	78.6	.....	2.0	*6.3	2.0
6A8GT	Osc.-Mod.	.....	.....	195	78.6	.....	136	*6.3	1.0
6SK7	I-F Amp.	.....	.....	.....	.....	5.5 B.C. 2.6 S.W.	78.6	*6.3	234
6SQ7	Det. A.V.C. 1st A-F	.....	.....	.....	.....	.....	110	*6.3	.....
6J5GT	Phase Invert.	.....	.....	118	195	.....	110	*6.3	4.5
6K6GT	Output	.....	.....	220	228	.....	.....	*6.3	15.0
6K6GT	Output	.....	.....	220	228	.....	.....	*6.3	15.0
6SK7	Mike Amp.	.....	.....	.....	.....	.....	.....	*6.3	POS.
5Y3G	Rectifier	.....	305 D.C.	.....	*325	.....	*325	.....	305 D.C.
6E5	Indicator	.....	.....	.....	225	.....	*6.3		

*Measured with A.C. volt meter

VOLTAGE DROP ACROSS SPEAKER FIELD= 77 VOLTS
MAXIMUM POWER OUTPUT @ 130 V. Line=7.5 Watts
POWER CONSUMPTION @ 117.5 V. Line=Radio 80 Watts, Phono Motor 35 Watts—TOTAL=115 WATTS
Voltages may vary 10% of values given.

COMPILED BY M. N. BEITMAN, SUPREME PUBLICATIONS

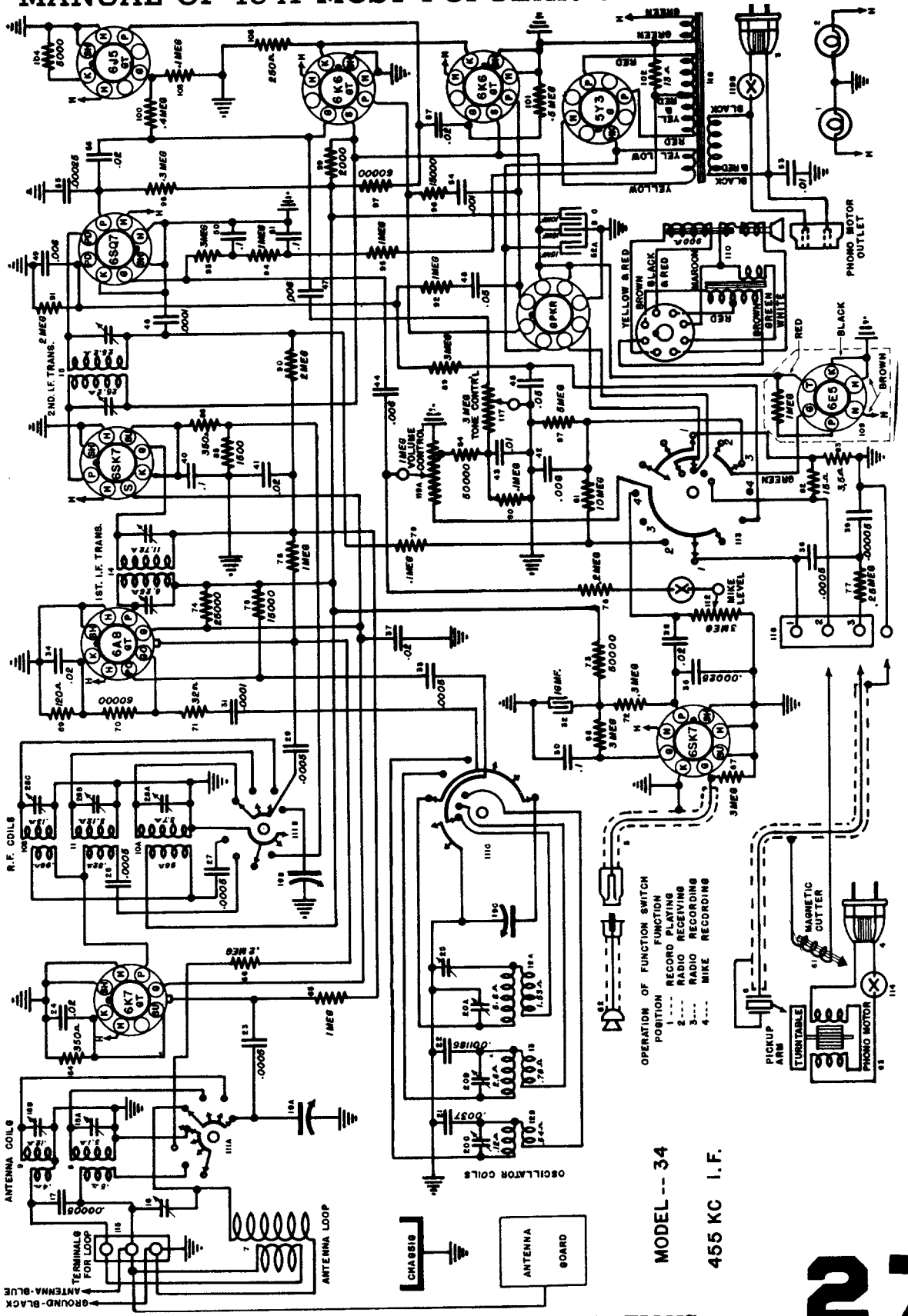
6J5 GT
6K6 GT
6K6 GT
5Y3 G
6SQ7
6SK7
6SK7
6K7 GT
6A8 GT
6E5
6K7 GT
6SK7
2ND. I.F. TRANS.
1ST. I.F. TRANS.
R.F. COILS
ANTENNA COILS
OSCILLATOR COILS
VOLUME CONTROL
TONE CONTROL
MIKE LEVEL
PHONO MOTOR OUTLET
MAGNETIC CUTTER
PICKUP ARM
TURNTABLE
PHONO MOTOR
OPERATION OF FUNCTION SWITCH
POSITION FUNCTION
1 --- RECORD PLAYING
2 --- RADIO RECEIVING
3 --- RADIO RECORDING
4 --- MIKE RECORDING
TERMINALS FOR LOOP
ANTENNA LOOP
CHASSIS
ANTENNA BOARD
ANTENNA-BLUE
GROUND-BLACK
MODEL -- 34
455 KC I.F.
Model 34
The Crosley Corporation

MANUAL OF 1941 MOST POPULAR SERVICE DIAGRAMS

WIRING DIAGRAM, MODEL CA12, CHASSIS MODEL 60

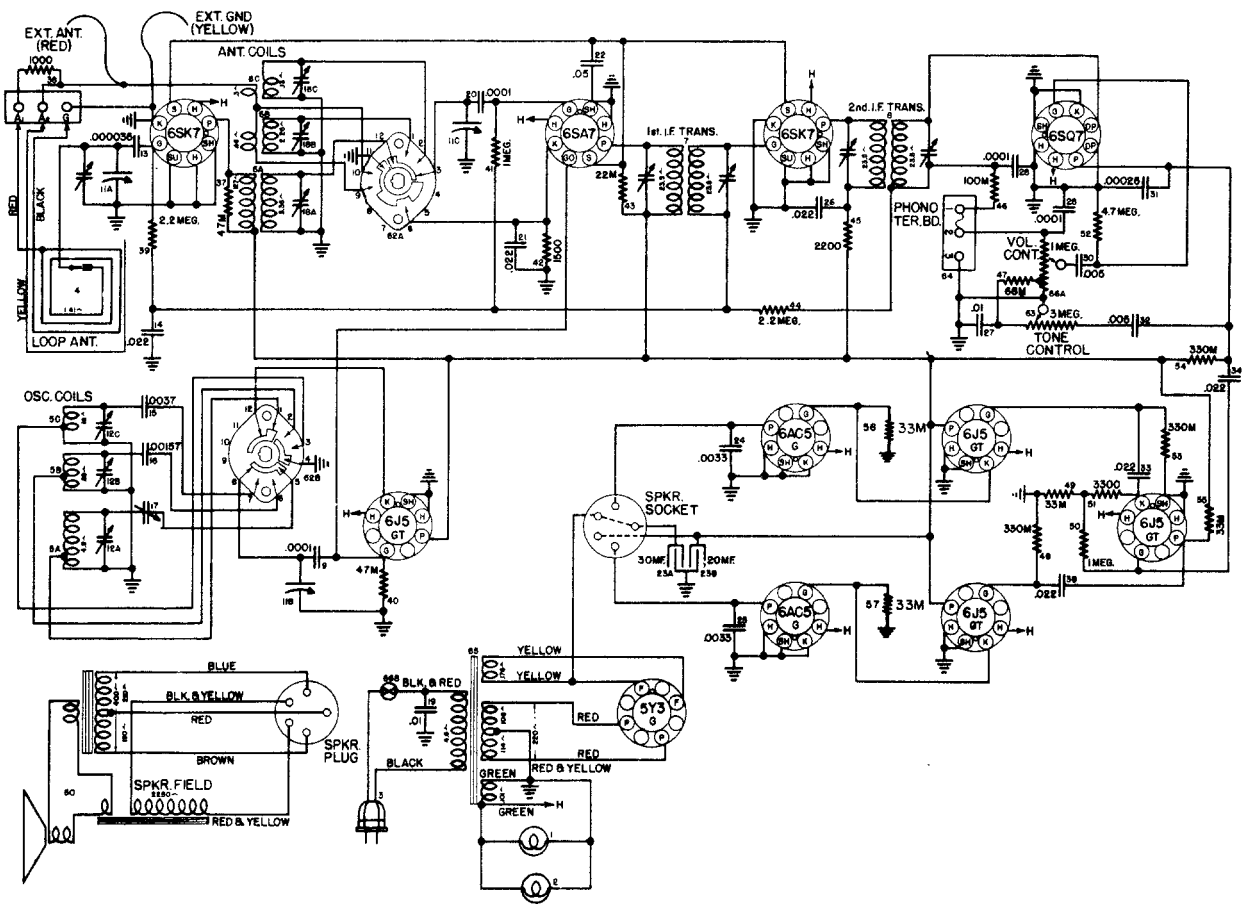

ALIGNMENT PROCEDURE CHART

Alignment Sequence	Dummy Antenna	Frequency Setting	Input Connection to Receiver	Band Switch	Tuning Cond. Setting	Trimmer Adjusted	Remarks
1.	.02 MF.	455 Kc.	Stator lug Rear section of Gang Cond.	B. C.	Fully open	2nd I-F (2) 1st I-F (2)	Adjust for Maximum. Adjust for Maximum.
2.	.0002 MF.	1600 Kc.	Ant. Lead (Red)	B. C.	Fully open	B. C. "OSC" Trimmer	Adjust for peak; gang does not have to tune thru signal. Loop must be connected.
3.	.0002 MF.	600 Kc.	Ant. Lead (Red)	B. C.	Approx. 60 on dial	B. C. "OSC" Series Trimmer	Adjust for maximum output while rocking gang thru signal.
4.	Repeat Step No. 2 to check possible shift due to series adjustment						
5.	.0002 MF.	1400 Kc.	Ant. Lead (Red)	B. C.	Approx. 140 on dial	B. C. "ANT" Trimmer B. C. "R-F" Trimmer	Adjust for maximum output do not touch B. C. Osc. Trimmer. Adjust for maximum output.
6.	400 ohm (carbon)	5.3 Mc.	Ant. Lead (Red)	Police	Fully open	Pol "OSC"	Adjust for peak; gang does not have to tune thru signal.
7.	400 ohm (carbon)	5.0 Mc.	Ant. Lead (Red)	Police	Approx. 5.0	Pol "ANT" Trimmer	Adjust for maximum output while rocking gang thru signal.
8.	400 ohm (carbon)	18.3 Mc.	Ant. Lead (Red)	S. W.	Fully open	S. W. "OSC"	Adjust for peak. Gang does not have to tune thru signal.
9.	400 ohm (carbon)	18.0 Mc.	Ant. Lead (Red)	S. W.	Approx. 18	S. W. "ANT" Trimmer	Adjust for maximum output while rocking gang thru signal.

10. Repeat the above alignment procedure for more accurate adjustments. Always keep signal generator output as low as possible to prevent action of the A.V.C. circuit.

THE CROSLEY CORPORATION

COMPILED BY M. N. BEITMAN, SUPREME PUBLICATIONS

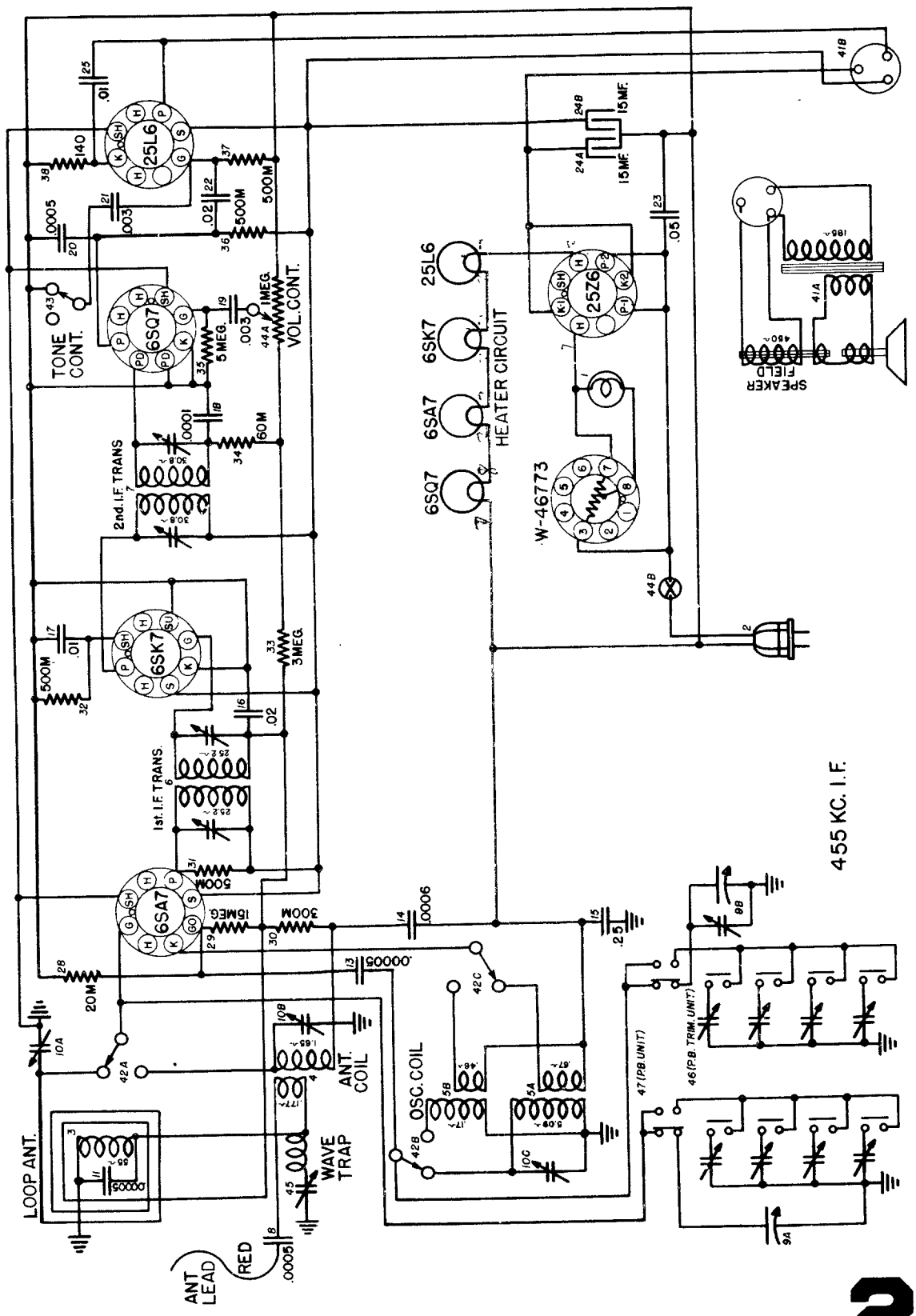

MODELS TA-62 — TA-62W — Chassis Model 63

MANUAL OF 1941 MOST POPULAR SERVICE DIAGRAMS

INSTALLATION, OPERATING AND SERVICE INSTRUCTIONS FOR CROSLEY MODEL TA-62 — TA-62W — Chassis Model 63

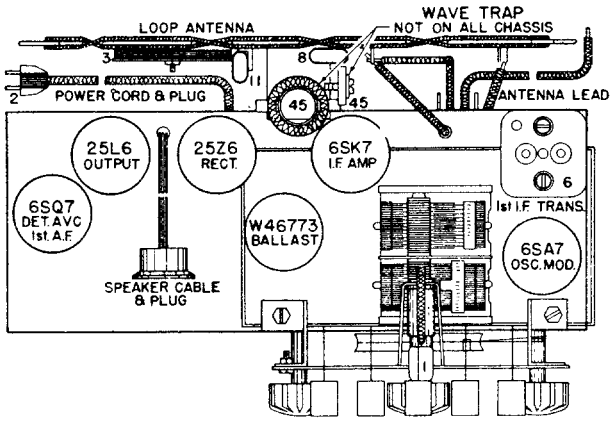

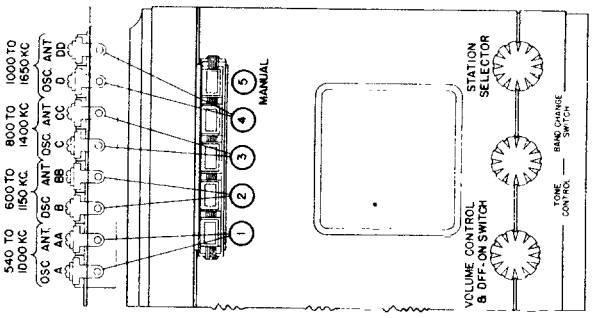

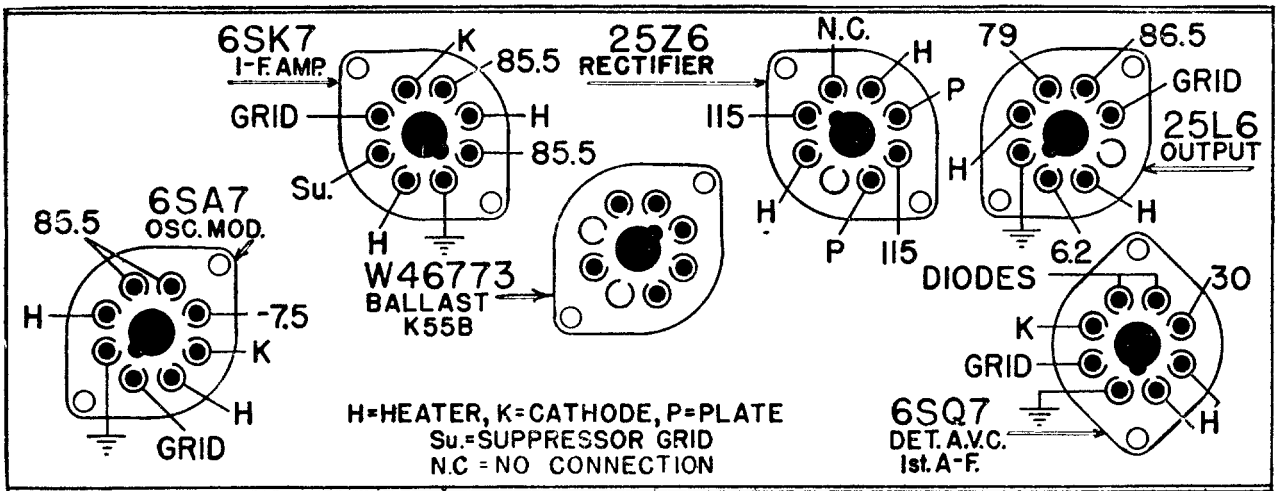

Socket Voltage Chart

Sequence	Dummy Antenna	Frequency Setting	Input Connection for Radio	Band Switch	Tuning Cond. Setting	Trimmer Adjusted	Remarks
1	.05 Mf.	456 Kc.	Antenna	S. B.	Fully open	2nd I-F (2) 1st I-F (2)	Adjust for maximum output. Adjust for maximum output.
2	400 ohm carbon	15.4 Mc.	Antenna	S. W.	Fully open	S. W. "OSC" (rear section of tuning condenser	Adjust for maximum output.
3	400 ohm carbon	15.0 Mc.	Antenna	S. W.	Approx. 15 on dial	S. W. "Ant." (center trimmer right end of chassis)	Adjust for maximum output while rocking gang thru signal.
4	.0002 Mf.	1600 Kc.	Antenna	S. B.	Fully open	B. C. "OSC" (front trimmer right end of chassis)	Adjust for maximum output. Gang does not have to tune thru signal.
5	.002 Mf.	1400 Kc.	Antenna	S. B.	Approx. 1400 on dial	B. C. "ANT" (rear trimmer right end of chassis)	Adjust for maximum output.

30

COMPILED BY M. N. BEITMAN, SUPREME PUBLICATIONS

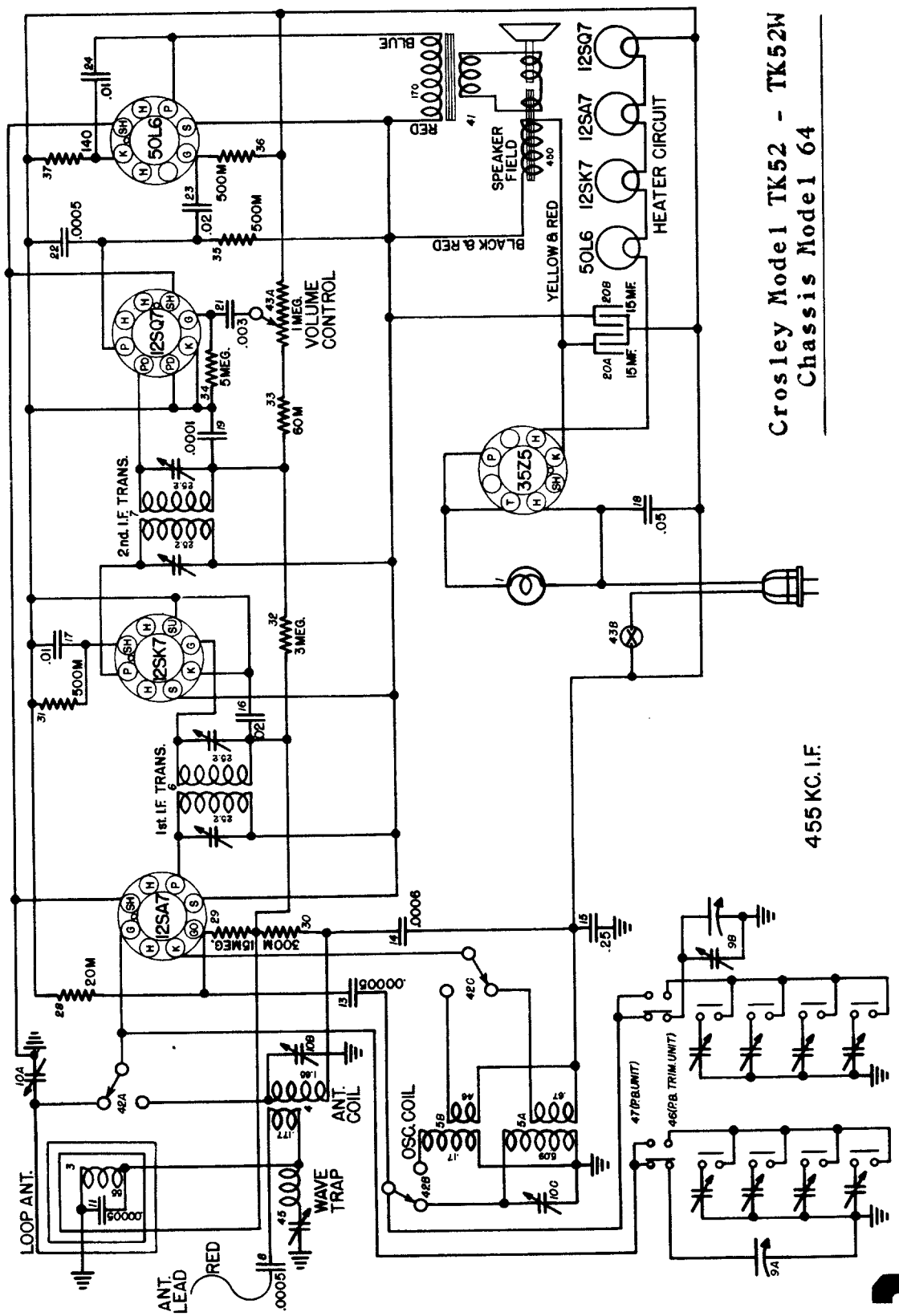

Crosley Model TK52 - TK52W
Chassis Model 64

THE CROSLEY CORPORATION
CINCINNATI, OHIO, U. S. A.

MANUAL OF 1941 MOST POPULAR SERVICE DIAGRAMS

CROSLEY MODEL TK52 — TK52W — Chassis Model 64

Sequence	Dummy Antenna	Frequency Setting	Input Connection To Radio	Band Switch	Tuning Cond. Setting	Trimmer Cond. Adjusted	Remarks
1.	.05 Mf.	456 Kc.	Antenna	S. B.	Fully on	2nd I-F (2) 1st I-F (2)	Adjust for maximum output. Adjust for maximum output.
2.	400 Ohm carbon	15.4 Mc.	Antenna	S. W.	Fully open	S. W. "OSC" (Rear section tuning cond.)	Adjust for maximum output.
3.	400 Ohm carbon	15.0 Mc.	Antenna	S. W.	Approx. 15 on dial	S. W. "ANT" (Center trimmer right end of chassis)	Adjust for maximum output while rocking gang thru signal.
4.	.0002 Mf.	1600 Kc.	Antenna	S. B.	Fully on	B. C. "OSC" (Front trimmer right end of Chassis)	Adjust for maximum output. Gang does not have to tune thru signal.
5.	.0002 Mf.	1400 Kc.	Antenna	S. B.	Approx. 140 on dial	B. C. "ANT" (Rear trimmer right end of chassis)	Adjust for maximum output.

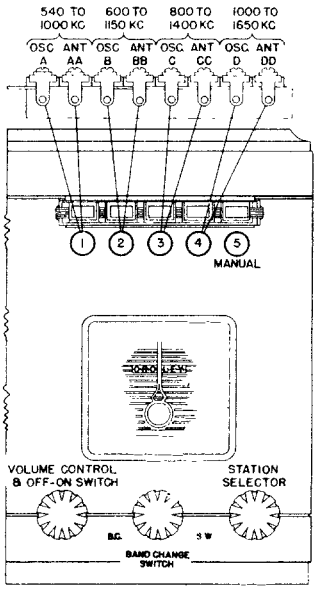

1. Turn the set on and leave operate for about ten or twenty minutes before attempting to set the push buttons.

2. Due to the wide range to which each button will tune it is essential that the stations selected are well within each buttons tuning range.

3. Push in the "Manual" button (extreme right) and using the station selector knob, tune in the station to which the No. 1 button is to be set.

4. Push in the No. 1 button and using a long, thin screw driver adjust the "OSC"/A padder screw, turning slowly (extreme right looking at rear of cabinet) until the station you tuned in (MANUALLY) is heard again. The padder condensers are accessible through the long horizontal opening in the upper left side of cabinet back. Be sure to adjust for maximum volume in speaker.

5. Adjust the No. 1 push button "ANT"/AA padder condenser for maximum volume in speaker.

6. Push in "Manual" push button and re-check station to make sure button is correctly set. There should be no change in volume when switched from push button to manual.

7. The set up for No. 1 button is then complete. Set up remaining buttons, using same procedure; adjust the "OSC" padder first, then the "ANT" padder, etc.

Tubes Used	Functions
12SA7	Oscillator—Modulator
12SK7	Intermediate Frequency Amplifier
12SQ7	Detector, A.V.C. 1st Audio Amplifier
50L6	Beam Power Output
35Z5	Rectifier

Standard Broadcast Band—1600-550 Kilocycles or 187.5-545 meters.

Short Wave Band—5.8-15.0 Megacycles or 62.5-20 meters.

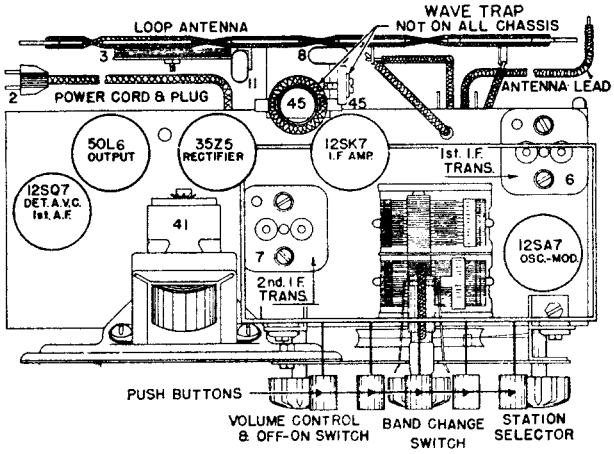

COMPILED BY M. N. BEITMAN, SUPREME PUBLICATIONS

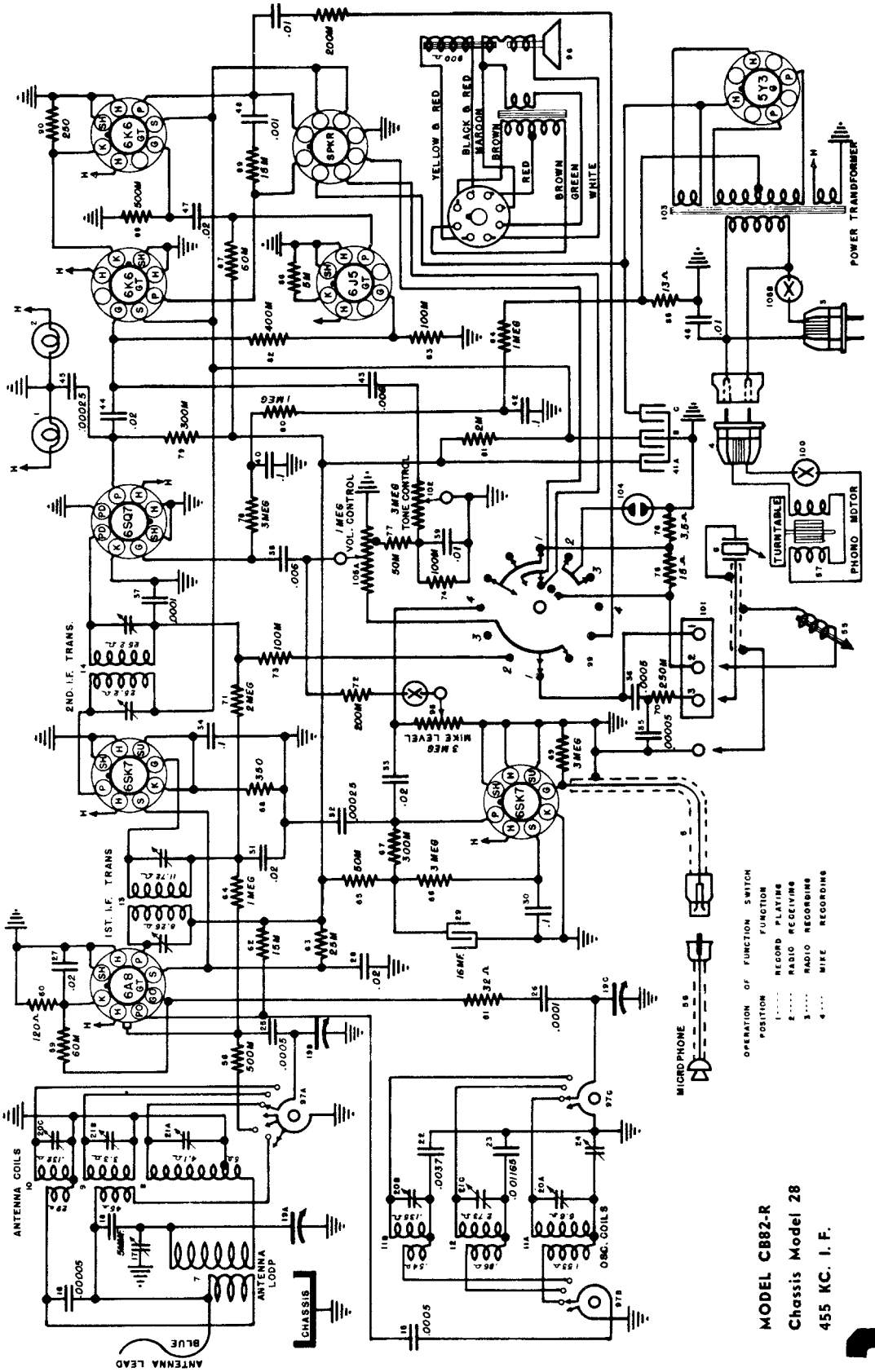

Model CB82-R
Chassis 28

The Crosley Corporation
Cincinnati, Ohio

MODEL CB82-R
Chassis Model 28
455 KC. I. F.

CHASSIS MODEL 28

INSTRUCTIONS FOR MODEL CB82-R

RADIO RECEIVER ALIGNMENT PROCEDURE

PRELIMINARY

Output Meter Connections ..... Plate to Plate of 6K6G's
Generator Ground Connection ..... To chassis or Ground Lead
Dummy Antenna to be in series with generator output ..... See Chart Below
Position of Volume Control ..... Fully On
Position of Tone Control ..... Treble or Speech
Position of Function Switch ..... Radio
Position of Mike Level Control ..... All the Way to Left (Off)

Alignment Sequence	Dummy Antenna	Frequency Setting	Input Connection to Receiver	Band Switch	Tuning Cond. Setting	Trimmer Adjusted	Remarks
1.	.02 MF.	455 Kc.	Grid of 6A8GT	B. C.	Fully open	2nd I-F (2) 1st I-F (2)	Adjust for Maximum. Adjust for Maximum.
2.	.0002 MF.	1650 Kc.	Ant. Lead (Blue)	B. C.	Fully open	B. C. "OSC" Trimmer	Adjust for peak: gang does not have to tune thru signal.
3.	.0002 MF.	600 Kc.	Ant. Lead (Blue)	B. C.	Approx. 60 on dial	B. C. "OSC" Series Trimmer	Adjust for maximum output while rocking gang thru signal.
4.	Repeat Step No. 2 to check possible shift due to series adjustment						
5.	.0002 MF.	1400 Kc.	Ant. Lead (Blue)	B. C.	Approx. 140 on dial	B. C. "ANT" Trimmer B. C. "PRE" Trimmer	Adjust for maximum output to not touch B. C. Osc. Trimmer. Adjust for maximum output.
6.	400 ohm (carbon)	5.3 Mc.	Ant. Lead (Blue)	Police	Fully open	Pol "OSC"	Adjust for peak gang; does not have to tune thru signal.
7.	400 ohm (carbon)	5.0 Mc.	Ant. Lead (Blue)	Police	Approx. 5.0	Pol "ANT"	Adjust for maximum output while rocking gang thru signal.
8.	400 ohm (carbon)	18.3 Mc.	Ant. Lead (Blue)	S. W.	Fully open	S. W. "OSC"	Adjust for peak. Gang does not have to tune thru signal.
9.	400 ohm (carbon)	18.0 Mc.	Ant. Lead (Blue)	S. W.	Approx. 18	S. W. "ANT"	Adjust for maximum output while rocking gang thru signal.

When aligning the shortwave bands "OSC" trimmers care must be exercised to see that the circuits are aligned on the correct frequency and not on the image which is approximately 910 kilocycles less **as indicated on the dial.** To check, increase generator output, tune-in the generator frequency and then tune-in the image frequency which should be weaker than the fundamental and come in approximately 910 kilocycles **lower on the dial** than the fundamental. If image cannot be tuned-in, the "OSC" trimmer is adjusted to the wrong peak. (Correct peak is the second peak on trimmer from the closed position).

Repeat the original alignment procedure for more accurate adjustments. Always keep signal generator output as low as possible to prevent action of the A.V.C. circuit.

SOCKET VOLTAGES MEASURED @ 117.5 VOLTS LINE (BETWEEN SOCKET PIN AND CHASSIS) WITH 1000 OHM PER VOLT, 500 VOLT RANGE VOLTMETER (D. C.)

TUBE FUNCTION	PIN NUMBER 1	2	3	4	5	6	7	8
6SK7—Pre-Amp.	0	0	.....	....	0	J. B.	*6.3	52
6A8GT—Osc.-Mod.	0	0	198	76.5	0	132	*6.3	1
6SK7—I. F. Amp.	0	0	2.4	0	2.3	76.5	*6.3	226
6SQ7—Det. A. V.C.-A. F.	0	0	0	0	0	98	*6.3	0
6J5GT—Phase Invert.	0	0	118.5	0	0	J. B.	*6.3	6.0
6K6G—Output	0	0	226	236	0	J. B.	*6.3	15.5
6K6G—Output	0	0	226	236	0	J. B.	*6.3	15.5
5Y3G—Rectifier	NC	310	J. B.	*300	J. B.	*300	J. B.	310

*Measure with A. C. Voltmeter.

MAX. POWER OUTPUT @ 117.5 V. LINE ..... 5.0 Watts
POWER CONSUMPTION @ 117.5 V. LINE ..... 66 Watts (Radio Only)
TOTAL POWER CONSUMPTION @ 117.5 V. LINE ..... 110 Watts (Including Phono Motor)
DROP ACROSS SPEAKER FIELD ..... 74 Volts

Voltages may vary 10% of values given.

J. B.—JUNCTION BLOCK N. C.—NO CONNECTION

COMPILED BY M. N. BEITMAN, SUPREME PUBLICATIONS

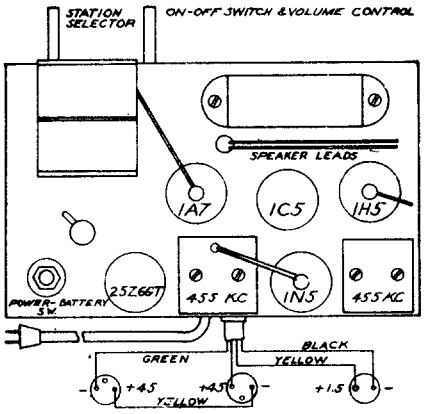

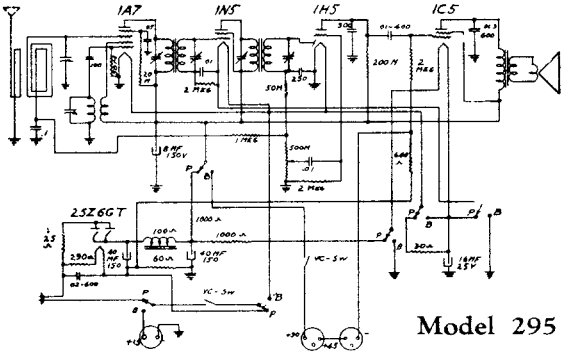

Model 295

Detrola Corporation
Detroit, Michigan

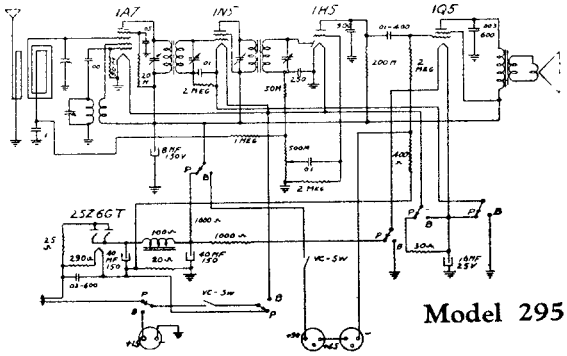

Model 295-1

ALIGNMENT PROCEDURE

I.F. Frequency 455 KC. Set Range 540-1580 KC.
Connect the test oscillator, or signal generator, to the set as follows: Connect the "hot" side of the signal generator to the grid of the 1A7 tube, and the ground side to the terminal on the back of the chassis. An output meter should be connected across the voice coil leads of the speaker to indicate resonance Align the I.F. trimmers at 455 KC for maximum meter reading.

Adjust the trimmer on the back of the variable condenser at or near 1400 KC at full volume on a weak broadcast signal. When aligning the set do not set the receiver on or near a metal work bench or other large metal object, as it will affect the tracking of the receiver.

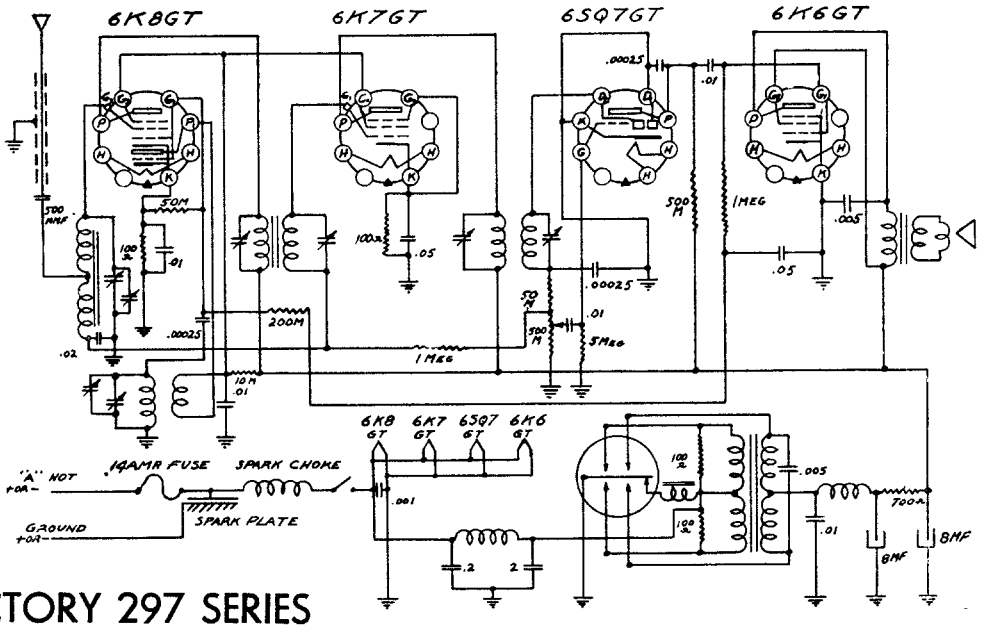

FACTORY 297 SERIES

I.F. 455 KC.

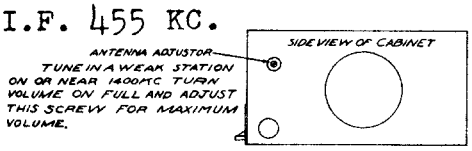

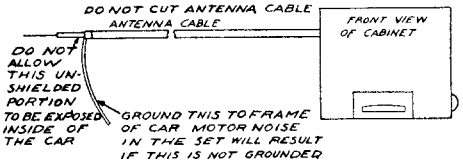

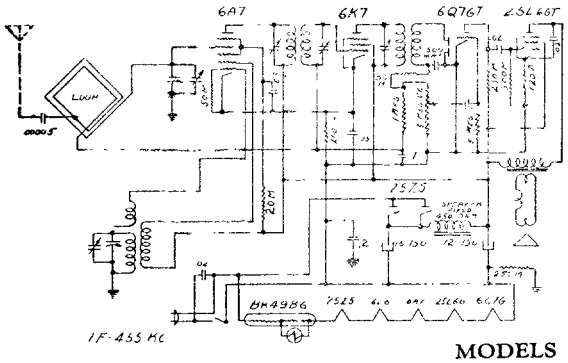

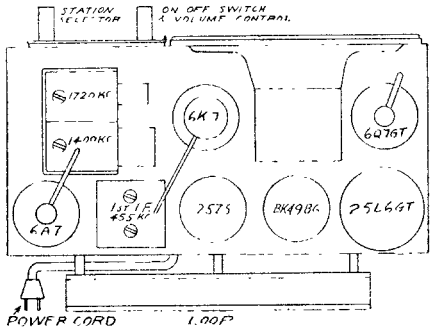

MODELS 304 and 3041

Detrola Corporation
Detroit, Michigan

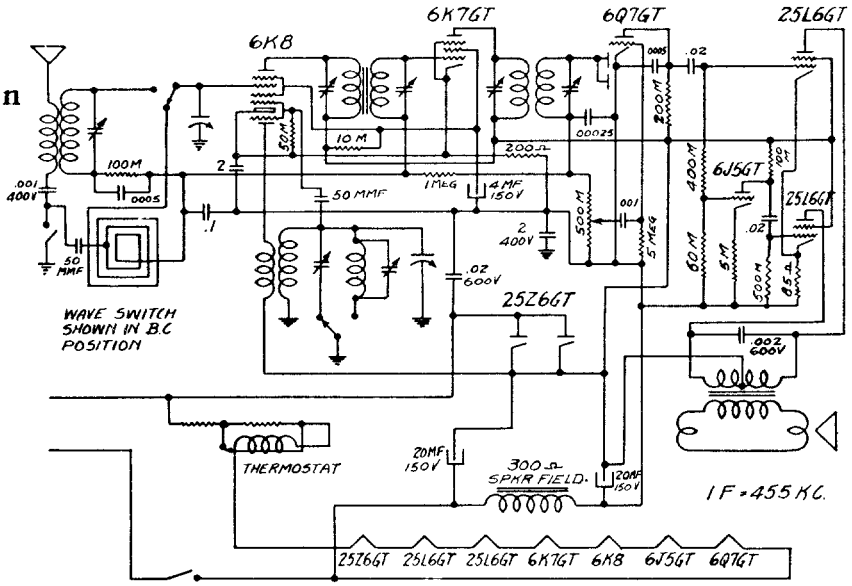

FACTORY 305 SERIES
FACTORY 3051 SERIES

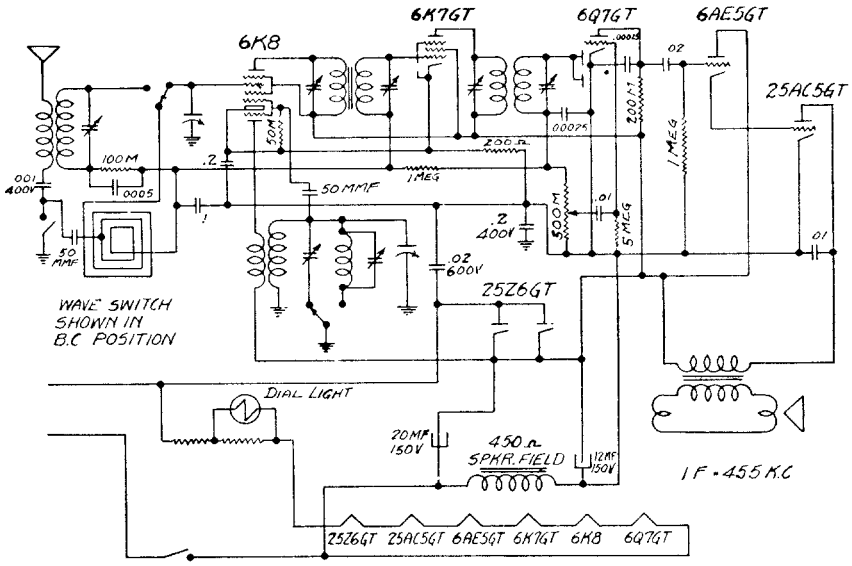

FACTORY 310 SERIES
FACTORY 3101 SERIES

COMPILED BY M. N. BEITMAN, SUPREME PUBLICATIONS

MANUAL OF 1941 MOST POPULAR SERVICE DIAGRAMS

FACTORY 320 SERIES
FACTORY 3201 SERIES
FACTORY 3202 SERIES

I.F. 455 KC.
For all Detrola Sets
on this page.

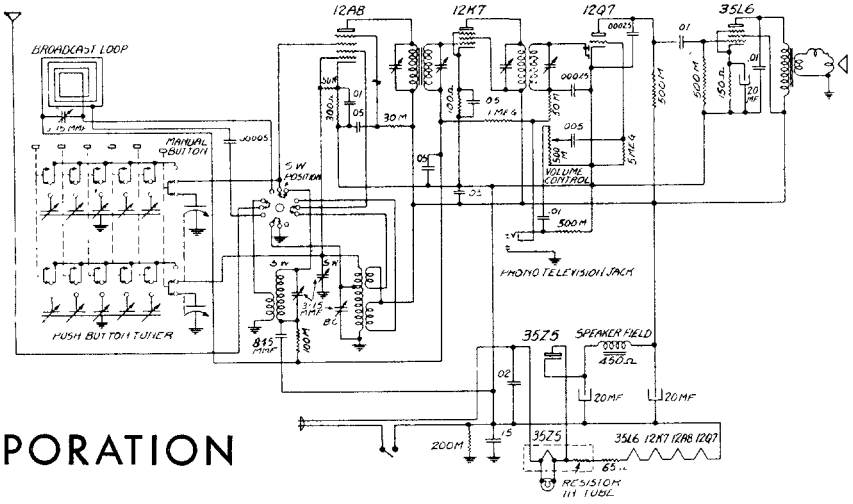

DETROLA CORPORATION

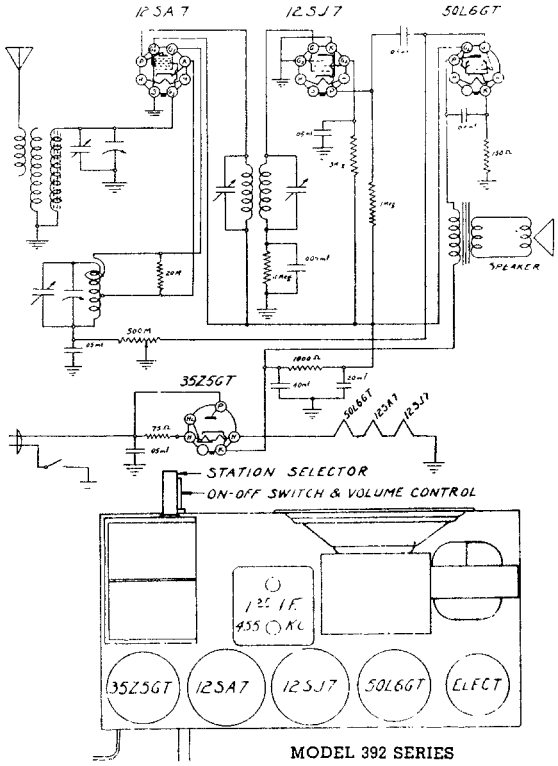

MODEL 392 SERIES

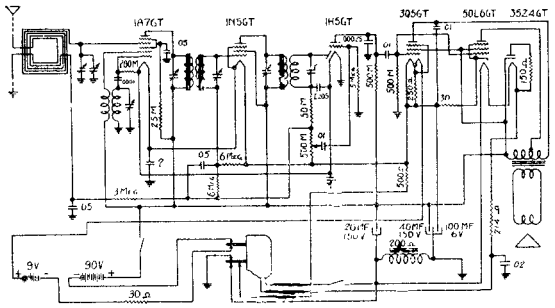

MODELS 360 - 3601 - 3602

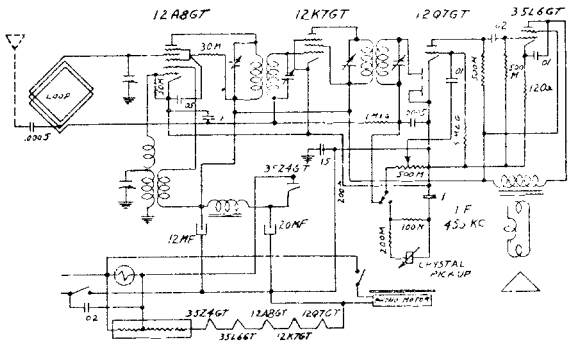

Detrola Model 2741

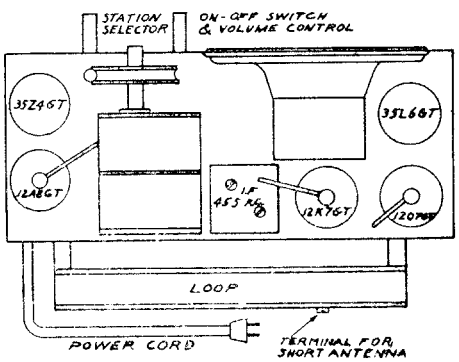

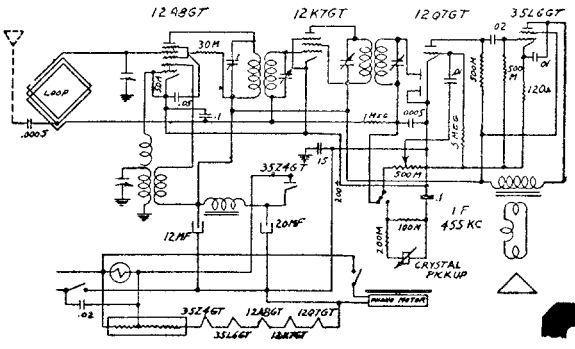

MODEL 2742—A.C.-D.C.—PHONOGRAPH

COMPILED BY M. N. BEITMAN, SUPREME PUBLICATIONS

MANUAL OF 1941 MOST POPULAR SERVICE DIAGRAMS

MODELS

DB-296, DB-301, DB-315 and DB-327

CHASSIS MODEL: DB

DL-330

CHASSIS MODEL: DL

DW-330A, DW-330B and DW-358

CHASSIS MODEL: DW

*Item	Part No.	DESCRIPTION
L1	7BW-179	Loop antenna assembly
T4	7BT-486A	Oscillator coil (DB1 and DL1)
T4	7BT-486	Oscillator coil (DB, DL and DW)
T2	7BT-545	Double-tuned 455 kc first i-f transformer (DB, DB1, DW)
T2	7BT-488	Double-tuned 455 kc first i-f transformer (DL, DL1)
T3	7BT-550B	Double-tuned 455 kc second i-f transformer (see production change No. 1)
R1	LR-60	20,000 ohm ¼ watt carbon resistor
R3	3FR-293	140 ohm ½ watt wire-wound resistor
R4	NNR-220	3 megohm ¼ watt carbon resistor
R5	7LR-378	Volume control .5 megohm with line switch (DL, DL1)
R5	7BR-363	Volume control .5 megohm with line switch (DB, DL1)
R5	7WR-389	Volume control .5 megohm with line switch (DW)
R6, R2	4XR-327	15 megohm ¼ watt carbon resistor
R7, R8	KR-56	500,000 ohm ¼ watt carbon resistor
R9	LR-61	200,000 ohm ¼ watt carbon resistor (DB1 and DL1)
C1, C2	7BC-445	Two-gang variable condenser (DB, DB1 and DW)
	7BC-445A	Two-gang variable condenser (DL and DL1)
C5, C11		Trimmers, part of variable condenser.
C6, C7, C8, C9		Trimmers, part of i-f transformers.
C10, C23	BC-12	0.05 mf, 200 volt tubular condenser (C23 used in DB1 and DL1)
C14	LC-64	0.05 mf, 400 volt tubular condenser
C12, C15, C4	4XC-394A	0.00022 mf mica condenser
C16, C3	3HC-274	0.002 mf, 600 volt tubular condenser
C17, C19	6JC-425	0.024 mf, 400 volt tubular condenser
C20, C21	6JC-426C	Dual 20 mf, 150 volt dry electrolytic condenser
C22	3CC-302	0.15 mf, 200 volt tubular condenser (DB1 and DL1)

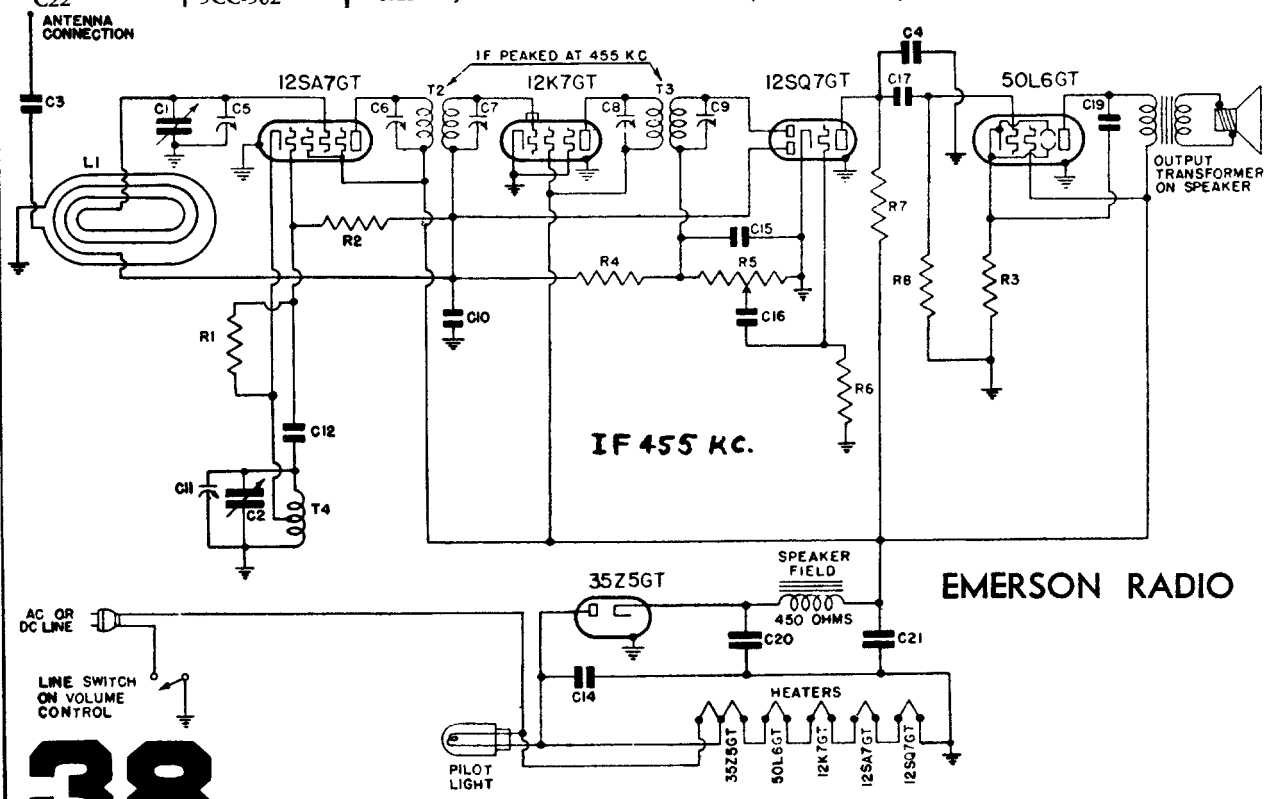

EMERSON RADIO

COMPILED BY M. N. BEITMAN, SUPREME PUBLICATIONS

MANUAL OF 1941 MOST POPULAR SERVICE DIAGRAMS

MODELS: DR-343, DR-348, DR-350 and DR-352 | MODELS: DR1-343, DR1-348 and DR1-352

CHASSIS MODEL: DR

*Item	Part No.	DESCRIPTION	
L1	7RT-531A	Antenna choke and 455 kc wave-trap	$ .85
T1	7RW-232	Loop antenna assembly	1.60
T2	7QT-548A	Double-tuned 455 kc first i-f transformer	1.00
T3	7QT-544	Double-tuned 455 kc second i-f transformer	.95
T4	7RT-529A	Two-band oscillator coil	.65
T5	7RT-530	Short-wave antenna coil	.45
R1, R10	4XR-327	15 megohm ¼ watt carbon resistor	.16
R2, R13	LR-61U	200,000 ohm ¼ watt carbon resistor	.16
R7, R8	KR-56	500,000 ohm ¼ watt carbon resistor	.16
R5	NNR-220U	3 megohm ¼ watt carbon resistor	.16
R6	7BR-363C	Volume control .5 megohm. with line switch	.85
R9	3FR-293	140 ohm, ½ watt wire-wound resistor	.16
R11	LR-60	20,000 ohm ¼ watt carbon resistor	.16
R12	KR-53	50,000 ohm ¼ watt carbon resistor	.16
C1, C2	7RC-464	Two-gang variable condenser	2.40
C3	HC-34	0.006 mf, 600 volt tubular condenser	.20
C4		0.001 mf, part of L1, wave-trap assembly	.20
C5, C18	PC-29	0.02 mf, 200 volt tubular condenser (see production change no. 1)	.20
C6	2ZC-253	0.0025 mf mica condenser	.20
C7, C8	7RC-465	Dual trimmer assembly	.30
†C9, C10, C11, C12		Trimmers, part of i-f transformers.	
C13, C14	7RC-466	Dual trimmer assembly	.30
C15	2NC-231D	Single adjustable padding condenser	.30
C16	5LC-410A	0.00011 mf mica condenser	.20
C17	7RC-479	0.0016 mf mica condenser	.20
C20, C29	BC-12	0.05 mf, 200 volt tubular condenser	.20
C21, C23	5AC-384	0.0002 mf, 600 volt tubular or mica condenser	.20
C22	3HC-274	0.002 mf, 600 volt tubular condenser	.20
C24	LC-65	0.02 mf, 400 volt tubular condenser	.20
C25	EC-23	0.03 mf, 400 volt tubular condenser	.20
C26	TTC-177	0.01 mf, 600 volt tubular condenser	.20
C27, C28	6QC-437A	Multiple dry electrolytic condenser, 150 volt. C27—20 mf; C28—40 mf	.95
C30	KC-58	0.01 mf, 400 volt tubular condenser	.20
C31	LC-64	0.05 mf, 400 volt tubular condenser	.20
C32	2CC-208	0.2 mf, 200 volt tubular condenser	.20

EMERSON RADIO AND PHONOGRAPH CORP.

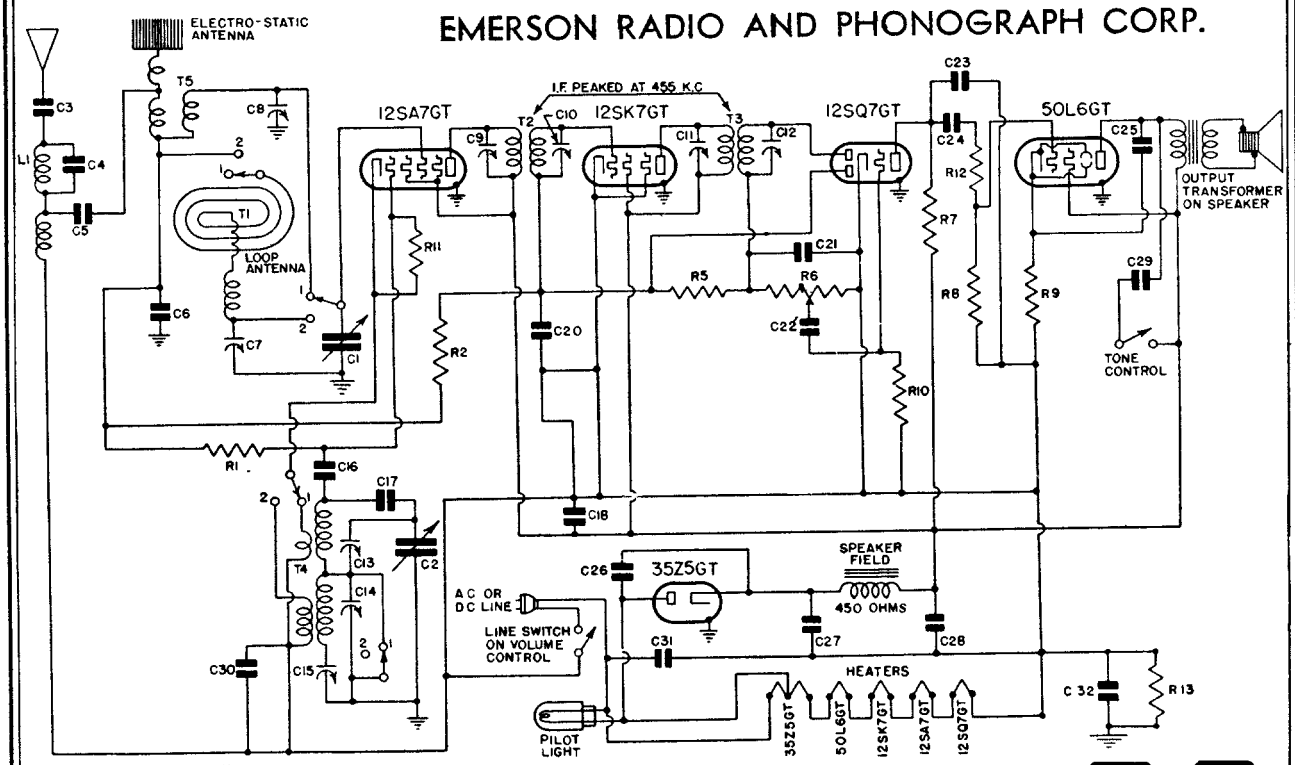

WAVE BAND SWITCH SHOWN IN SHORT WAVE POSITION. POSITION NO.1 SHORT WAVE NO.2 BROADCAST

ON MODEL-DR-OMIT PARTS R13 AND C32 AND GROUND B- TO CHASSIS.

COMPILED BY M. N. BEITMAN, SUPREME PUBLICATIONS

EMERSON RADIO AND PHONOGRAPH CORP.

Models

DS-365

DS-372

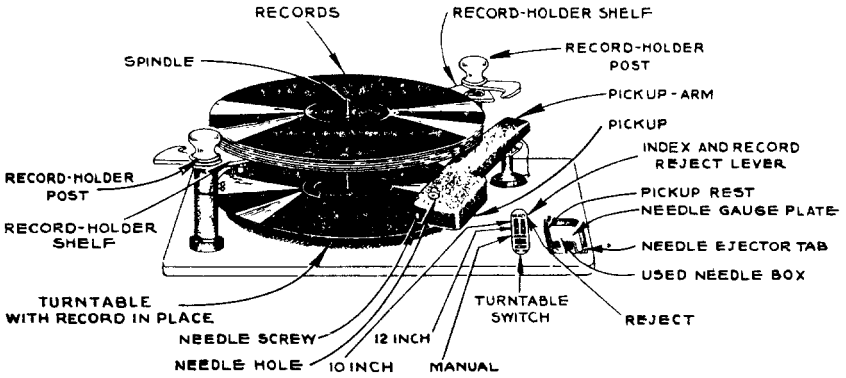

Top View of Automatic Record Changer

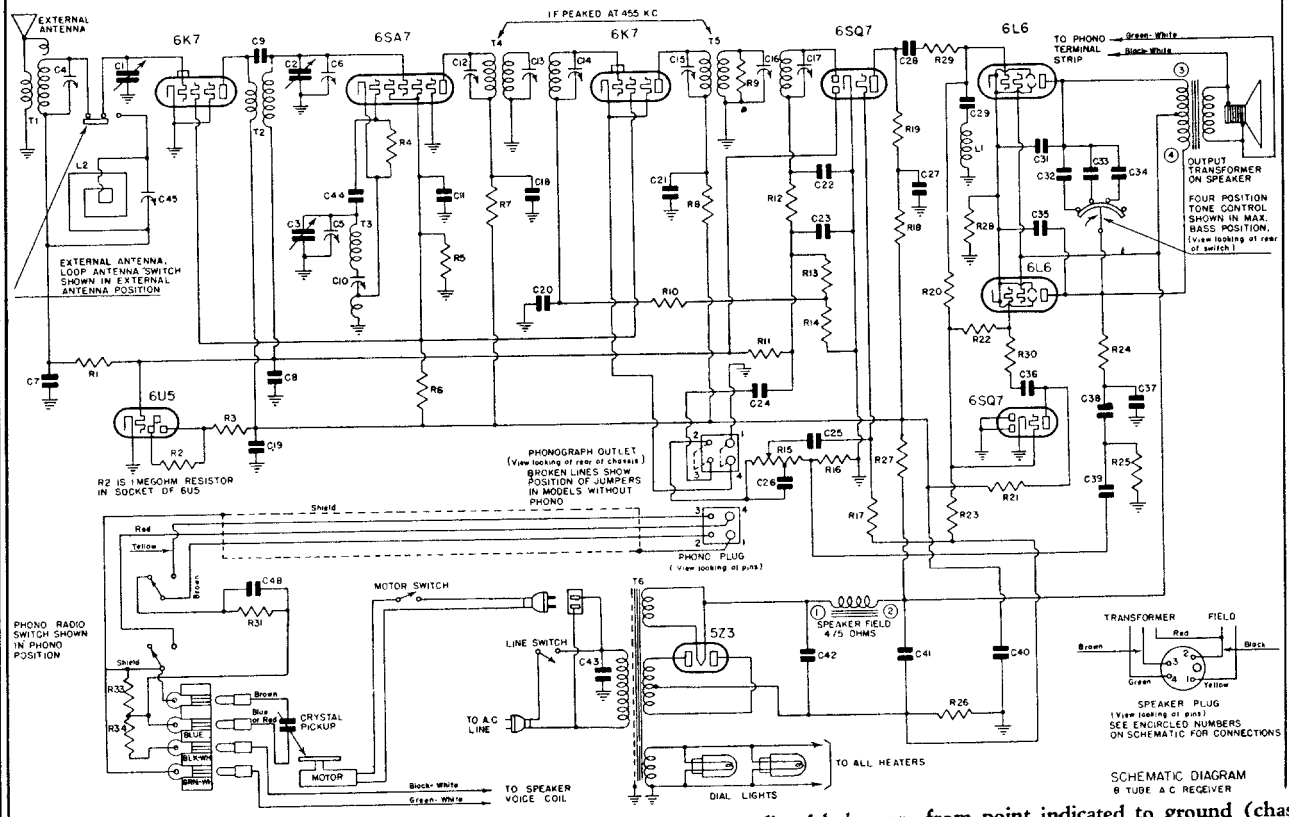

SCHEMATIC DIAGRAM
8 TUBE A.C. RECEIVER

Readings should be taken with a 1000 ohms-per-volt meter. Voltages listed below are from point indicated to ground (chassis) with the volume control turned on full and no signal. Line voltage for these readings was 117 volts, 60 cycles, a.c. All readings except B plus at rectifier, heaters, and cathode voltages were taken on 300 volt scale.

Tube	Plate	Screen	Cathode	Heaters
6K7GT	245	70	0	6.3
6SA7GT	245	70	0	6.3
6K7GT	235	70	0	6.3
6SQ7GT (det.)	125	—	0	6.3
6SQ7GT (P.I.)	150	—	0	6.3
6L6 (2)	275	285	18.5	6.3

Emerson Radio and Phonograph Corp.

Models DS-365, DS-372

REPLACEMENT PARTS

*Item	Part No.	DESCRIPTION	PRICE
L1	7ST-538	10 K.C. filter choke	$1.40
L2	7SW-238	Loop antenna (365 cabinet)	1.05
L2	7SW-298	Loop antenna (372 cabinet)	1.75
T1	7ST-533	Antenna coil	.40
T2	7ST-534	Interstage coil	.50
T3	7ST-535	Oscillator coil	.25
T4	7ST-536	Triple-tuned 455 kc first i-f transformer	1.45
T5	7ST-537	Triple-tuned 455 kc second i-f transformer	1.60
T6	7ST-549	Power transformer	8.90
R1, R12, R29, R30	KR-53	50,000 ohm ¼ watt carbon resistor	.16
R2	KR-57	1 megohm ¼ watt resistor in 6U5 tube socket	.16
R3	GR-31	20,000 ohm 1 watt carbon resistor	.16
R4	LR-60	20,000 ohm ¼ watt carbon resistor	.16
R5	3BR-247	40,000 ohm ½ watt carbon resistor	.16
R6	7SR-411	15,000 ohm 2 watt carbon resistor	.25
R7, R8	PR-79	1000 ohm ¼ watt carbon resistor	.16
R9		190,000 ohm resistor, part of T6.	
R10, R11	NNR-220	3 megohm ¼ watt carbon resistor	.16
R13	LR-61	200,000 ohm ¼ watt carbon resistor	.16
R14, R18, R19, R21	KR-54	100,000 ohm ¼ watt carbon resistor	.16
R15	7SR-379	Volume control, 1.2 megohm, double tapped	.70
R16	3ER-262	75 ohm ½ watt wire-wound resistor	.16
R17	HR-42	2 megohm ¼ watt carbon resistor	.16
R20, R22, R23	KR-55	250,000 ohm ¼ watt carbon resistor	.16
R24	3BR-246	10,000 ohm 2 watt carbon resistor	.25
R25	7SR-404	3,500 ohm ½ watt carbon resistor	.16
R26	7SR-402	11 ohm ½ watt wire-wound resistor	.16
R27	3XR-283	1500 ohm 2 watt carbon resistor	.25
R28	7SR-403	180 ohm 3 watt carbon resistor	.30
C1, C2, C3	7SC-496	Three-gang variable condenser	5.05
C4		Trimmer, part of T1.	
C5, C6		Trimmers, part of variable condenser.	
C7, C8, C20	BC-12	0.05 mf, 200 volt tubular condenser	.20
C9	7SC-498A	0.000008 mf, mica condenser	.20
C10	2NC-231A	Single adjustable padding condenser; range 300 to 600 mmf	.30
C11	EEC-132	0.1 mf, 400 volt tubular condenser	.20
C12, C13, C14, C15, C16, C17		Trimmers, part of i-f transformers.	
C18, C21, C36	LC-64	0.05 mf, 400 volt tubular condenser	.20
C19, C27, C28	EEC-132	0.1 mf, 400 volt tubular condenser	.20
C22, C26, C48	5LC-410A	0.00011 mf, mica condenser	.20
C23	4XC-393A	0.00006 mf, mica condenser	.20
C24, C25	KC-58	0.01 mf, 400 volt tubular condenser	.20
C29		0.0014 mf, mica condenser; part of L1.	
C31, C35	3VC-324	0.003 mf, 600 volt tubular condenser	.20
C32	3XC-374	0.1 mf, 600 volt tubular condenser	.20
C33	7EC-473	0.05 mf, 600 volt tubular condenser	.20
C34	QQC-173	0.015 mf, 600 volt tubular condenser (see production change number 1)	.20
C37	7SC-497	0.08 mf, 600 volt tubular condenser	.20
C38	4DC-349	0.04 mf, 400 volt tubular condenser	.20
C39	EC-19	0.5 mf, 200 volt tubular condenser	.35
C40, C41	7AC-444A	16 mf, 400 volt dry electrolytic condenser	.85
C42	3XC-329 or	30 mf, 450 volt wet electrolytic condenser	1.35
	7SC-501	30 mf, 450 volt fabricated plate electrolytic condenser	1.00
C43, C44	3LC-297A	0.01 mf, 400 volt tubular condenser	.20
C45		Trimmer, part of L2.	

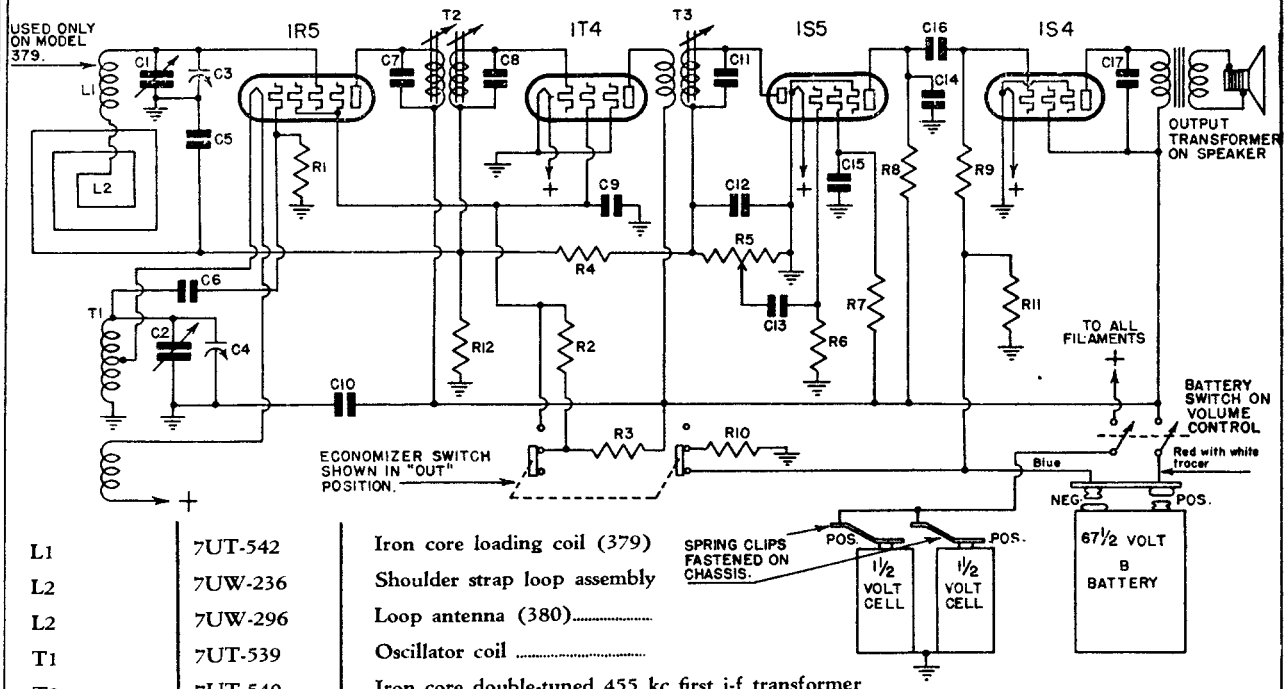

L1	7UT-542	Iron core loading coil (379)
L2	7UW-236	Shoulder strap loop assembly
L2	7UW-296	Loop antenna (380)
T1	7UT-539	Oscillator coil
T2	7UT-540	Iron core double-tuned 455 kc first i-f transformer
T3	7UT-541	Iron core single-tuned 455 kc second i-f transformer
R1	KR-54	100,000 ohm ¼ watt carbon resistor
R2	LR-64	5,000 ohm ¼ watt carbon resistor
R3	LR-65	10,000 ohm ¼ watt carbon resistor
R4, R12	3RR-274	5 megohm ¼ watt carbon resistor
R5	7UR-380	Volume control 1.5 megohm with double pole battery switch
R6	3RR-274	10 megohm ¼ watt carbon resistor
R7, R9	NNR-220	3 megohm ¼ watt carbon resistor
R8	KR-57	1 megohm ¼ watt carbon resistor
R10	7UR-394	2200 ohm ¼ watt carbon resistor
R11	7UR-392	1800 ohm ¼ watt carbon resistor
C1, C2	7UC-469	Two-gang variable condenser
†C3, C4		Trimmers, part of variable condenser.
C5, C9, C15	FC-29	0.02 mf, 200 volt tubular condenser
C6, C12, C14	5LC-410A	0.00011 mf mica condenser
†C7, C8, C11		Fixed trimming condensers, contained inside i-f cans.
C10	7UC-476	10 mf, 100 volt dry electrolytic condenser
C13	3HC-274	0.002 mf, 600 volt tubular condenser
C16, C17	NNC-199	0.001 mf, 600 volt tubular condenser

Emerson Radio

Models DU-379 DU-380

Readings should be taken with a 1000 ohms-per-volt meter. Voltages listed are from point indicated to chassis with volume control turned on full and no signal. The battery voltages for these readings were: "A" 1.5 volts, "B" 67.5 volts. All readings except filaments were taken on the 250 volt scale, with battery saver "out."

Tube	Plate	Screen	Osc. Plate	Fil.
1R5	57	60	57	1.5
1T4	57	60	—	1.5
1S5	*5	*3	—	1.5
1S4	55	60	—	1.5

MANUAL OF 1941 MOST POPULAR SERVICE DIAGRAMS

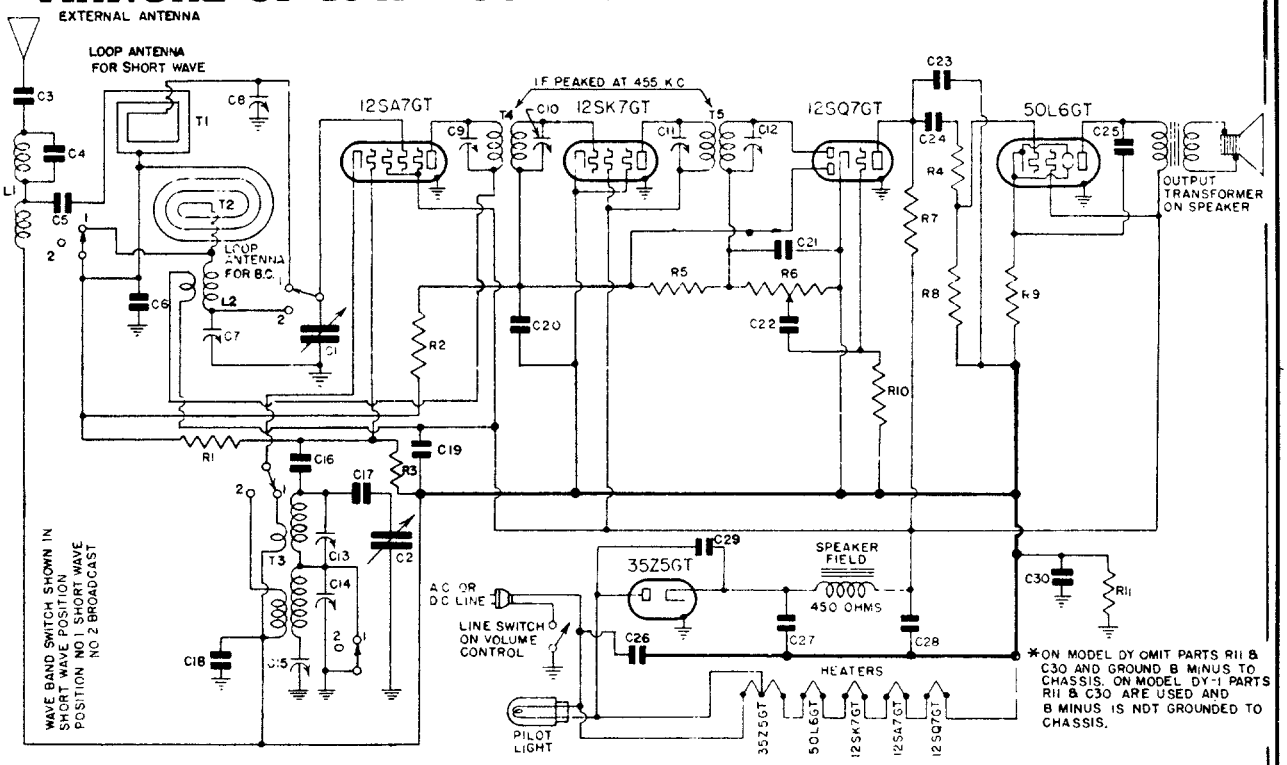

L1	7RT-531	Antenna choke and 455 kc wave-trap (DY1)
L1	7RT-531A	Antenna choke and 455 kc wave-trap (DY)
L2	7YT-552A	Broadcast loop antenna loading coil
T1, T2	7YW-249A	Two-band loop antenna assembly
T3	7YT-551A	Two-band oscillator coil
T4	7QT-548C	Double-tuned 455 kc first i-f transformer
T5	7QT-544	Double-tuned 455 kc second i-f transformer
R1, R10	4XR-327	15 megohm ¼ watt carbon resistor
R2, R11	LR-61U	200,000 ohm ¼ watt carbon resistor
R3	LR-60	20,000 ohm ¼ watt carbon resistor
R4	KR-53	50,000 ohm ¼ watt carbon resistor
R5	HR-42	2 megohm ¼ watt carbon resistor
R6	7BR-363C	Volume control .5 megohm with line switch
R7, R8	KR-56	500,000 ohm ¼ watt carbon resistor
R9	3FR-293	140 ohm, ½ watt wire-wound resistor
C1, C2	7RC-464	Two-gang variable condenser
C3	HC-34	0.006 mf, 600 volt tubular condenser
C4		0.001 mf, part of L1, wave-trap assembly
C5, C19	FC-29	0.02 mf, 200 volt tubular condenser
C6	2ZC-253	0.0025 mf mica condenser
C7, C8		Trimmers, part of loop antenna assembly.
†C9, C10, C11, C12		Trimmers, part of i-f transformers.
C13, C14	7RC-466	Dual trimmer assembly
C15	2NC-231D	Single adjustable padding condenser
C16	4XC-394A	0.00022 mf mica condenser
C17	7YC-483	0.00114 mf mica condenser (coded 0.0011 mf)
C18	KC-58	0.01 mf, 400 volt tubular condenser
C20	AC-6	0.1 mf, 200 volt tubular condenser
C21, C23	5AC-384	0.0002 mf, 600 volt tubular or mica condenser
C22	3HC-274	0.002 mf, 600 volt tubular condenser
C24	LC-65	0.02 mf, 400 volt tubular condenser
C25	EC-23	0.03 mf, 400 volt tubular condenser
C26	LC-64	0.05 mf, 400 volt tubular condenser
C27, C28	6JC-426H	Dual 20 mf, 150 volt dry electrolytic condenser
C29	TTC-177	0.01 mf, 600 volt tubular condenser
C30	2CC-208	0.2 mf, 200 volt tubular condenser

Voltage at 35Z5 cathode—120 volts.
Voltage across speaker field—32 volts.
Voltage across pilot light—4.5 volts.

Tube	Plate	Screen	Cathode	Fil.
12SA7GT	88	88	0	12
12SK7GT	88	88	0	12
12SQ7GT	30	—	0	12
50L6GT	82	88	5.6	50

DY-337
DY1-337
DY-349
DY1-349
DY-351
DY1-351

Emerson

43

COMPILED BY M. N. BEITMAN, SUPREME PUBLICATIONS

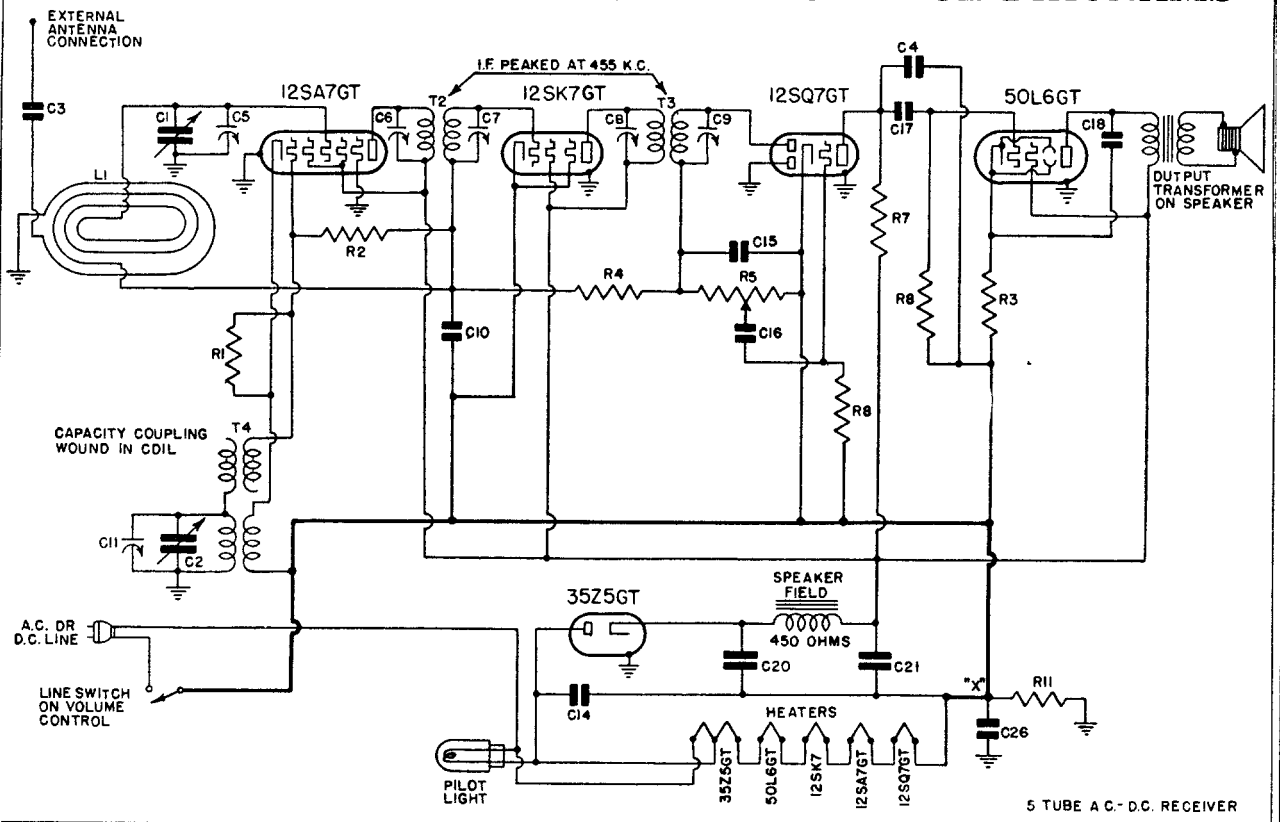

NOTE: R11 and C26 are used on Underwriters' approved chassis only; on other chassis point X is grounded to the chassis.

L1	7BW-179	Loop antenna assembly (FC)
L1	8CW-334	Loop antenna assembly (FG)
T4	7QT-547A	Oscillator coil
T2	8CT-566	Double-tuned 455 kc first i-f transformer
T3	7BT-550E	Double-tuned 455 kc second i-f transformer
R1	LR-60U	20,000 ohm ¼ watt carbon resistor
R3	3FR-293	140 ohm ½ watt wire-wound resistor
R4	NNR-220	3 megohm ¼ watt carbon resistor
R5	7BR-363D	Volume control .5 megohm with line switch (FC)
R5	7LR-378	Volume control .5 megohm with line switch (FG)
R6, R2	4XR-327	15 megohm ¼ watt carbon resistor
R7, R8	KR-56U	500,000 ohm ¼ watt carbon resistor
R11	LR-61	200,000 ohm ¼ watt carbon resistor
C1, C2	7BC-445D	Two-gang variable condenser (FC)
C1, C2	7BC-445A	Two-gang variable condenser (FG)
C3, C16	3HC-274	0.002 mf, 600 volt tubular condenser
C4, C15	5AC-384	0.002 mf, 600 volt tubular condenser
C5, C11		Trimmers, part of variable condenser
C6, C7, C8, C9		Trimmers, part of variable condenser
C10, C27	BC-12	0.05 mf, 200 volt tubular condenser
C14	LC-64	0.05 mf, 400 volt tubular
C17, C18	LC-65	0.02 mf, 400 volt tubular condenser
C20, C21	6JC-426E	Dual 20 mf, 150 volt dry electrolytic condenser (FC)
C20, C21	6JC-426M	Dual 20 mf, 150 volt dry electrolytic condenser (FG)
C24	AC-6	0.1 mf, 200 volt tubular condenser
C26	2CC-208	0.2 mf, 200 volt tubular condenser

Emerson Radio

MODEL: FC-400

CHASSIS MODEL: FC

MODEL: FG-330

CHASSIS MODEL: FG

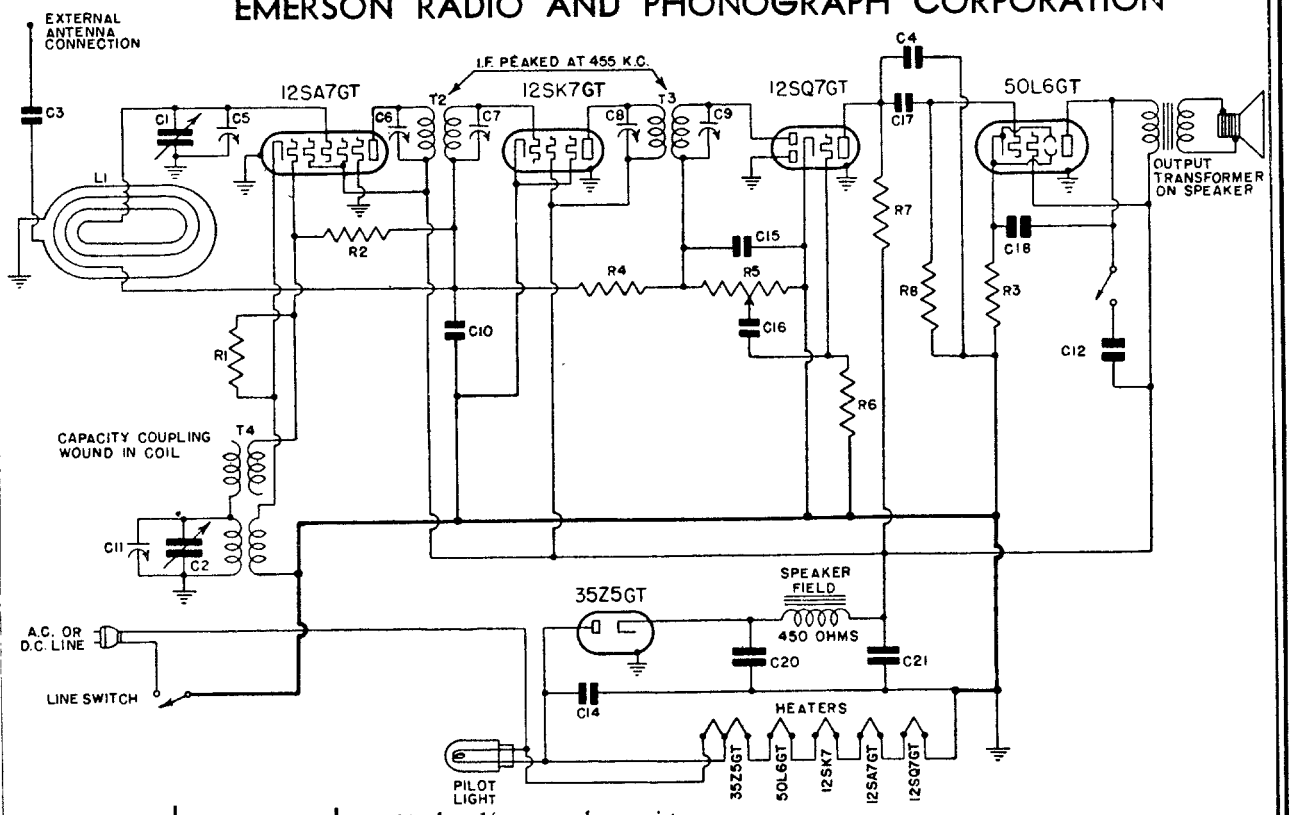

R1	LR-60	20,000 ohm ¼ watt carbon resistor
R2, R6	4XR-327	15 megohm ¼ watt carbon resistor
R3	3FR-293	140 ohm ½ watt wire-wound resistor
R4	NNR-220	3 megohm ¼ watt carbon resistor
R5	9PR-447	Volume control .5 megohm
R7, R8	KR-56	500,000 ohm ¼ watt carbon resistor
C1, C2	9PC-533	Two-gang variable condenser
C3, C16	3HC-274	0.002 mf, 600 volt tubular condenser.
C4	5AC-384	0.0002 mf, 600 volt tubular condenser
C5, C11		Trimmers, part of variable condenser.
C6, C7, C8, C9		Trimmers, part of i-f transformers.
C10	AC-6	0.1 mf, 200 volt tubular condenser
C12	9PC-544	0.04 mf, 200 volt tubular condenser

Emerson Radio

Models FP-421
FP-422

VOLTAGE ANALYSIS

Voltage at 35Z5 cathode—120 volts.
Voltage across speaker field—32 volts.
Voltage across pilot light—4.5 volts.

Tube	Plate	Screen	Cathode	Fil.
12SA7GT	88	88	0	12
12SK7GT	88	88	0	12
12SQ7GT	30	—	0	12
50L6GT	82	88	5.6	50

Fada Radio & Electric Co., Inc.

Long Island City, N. Y.

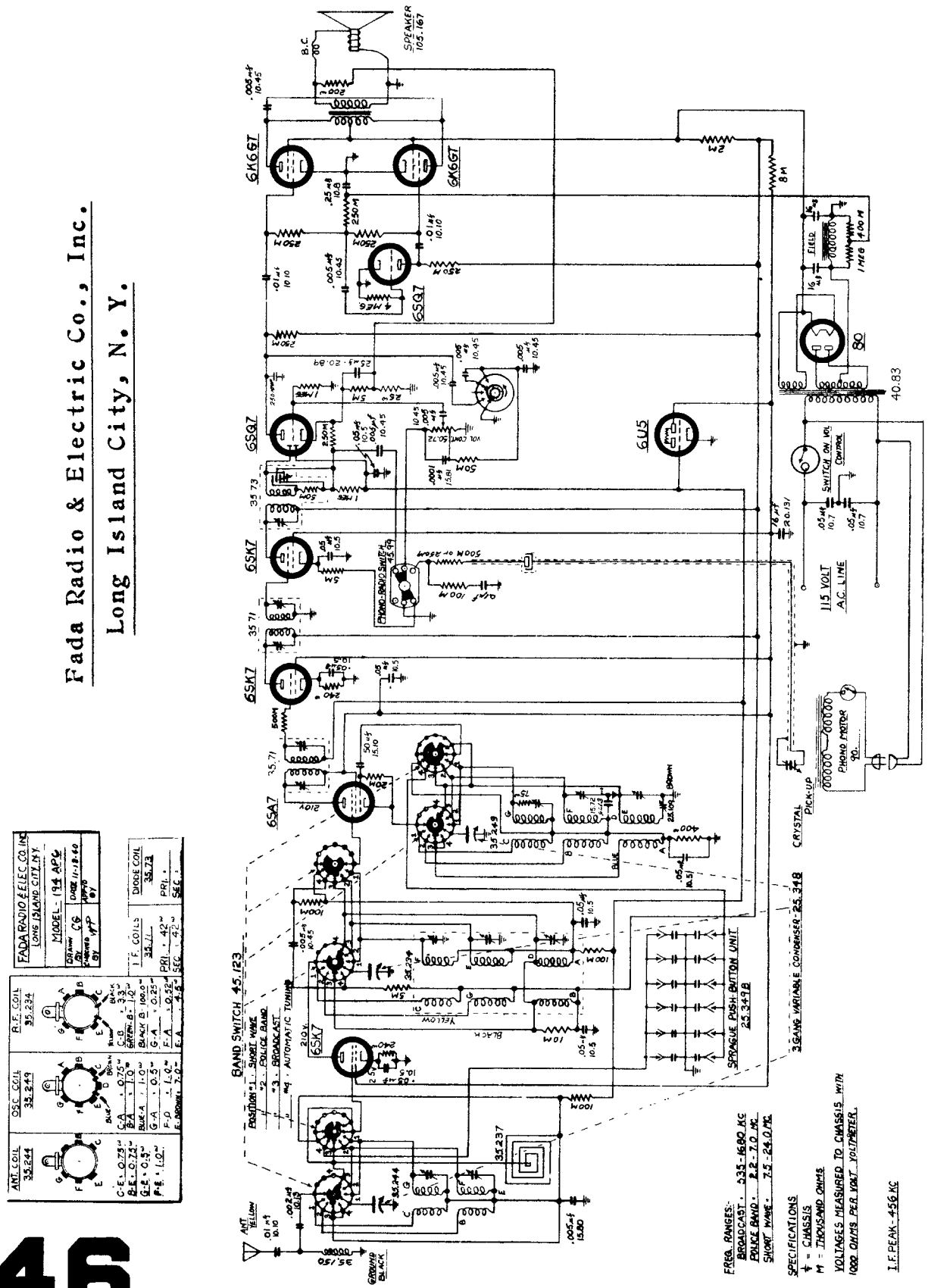

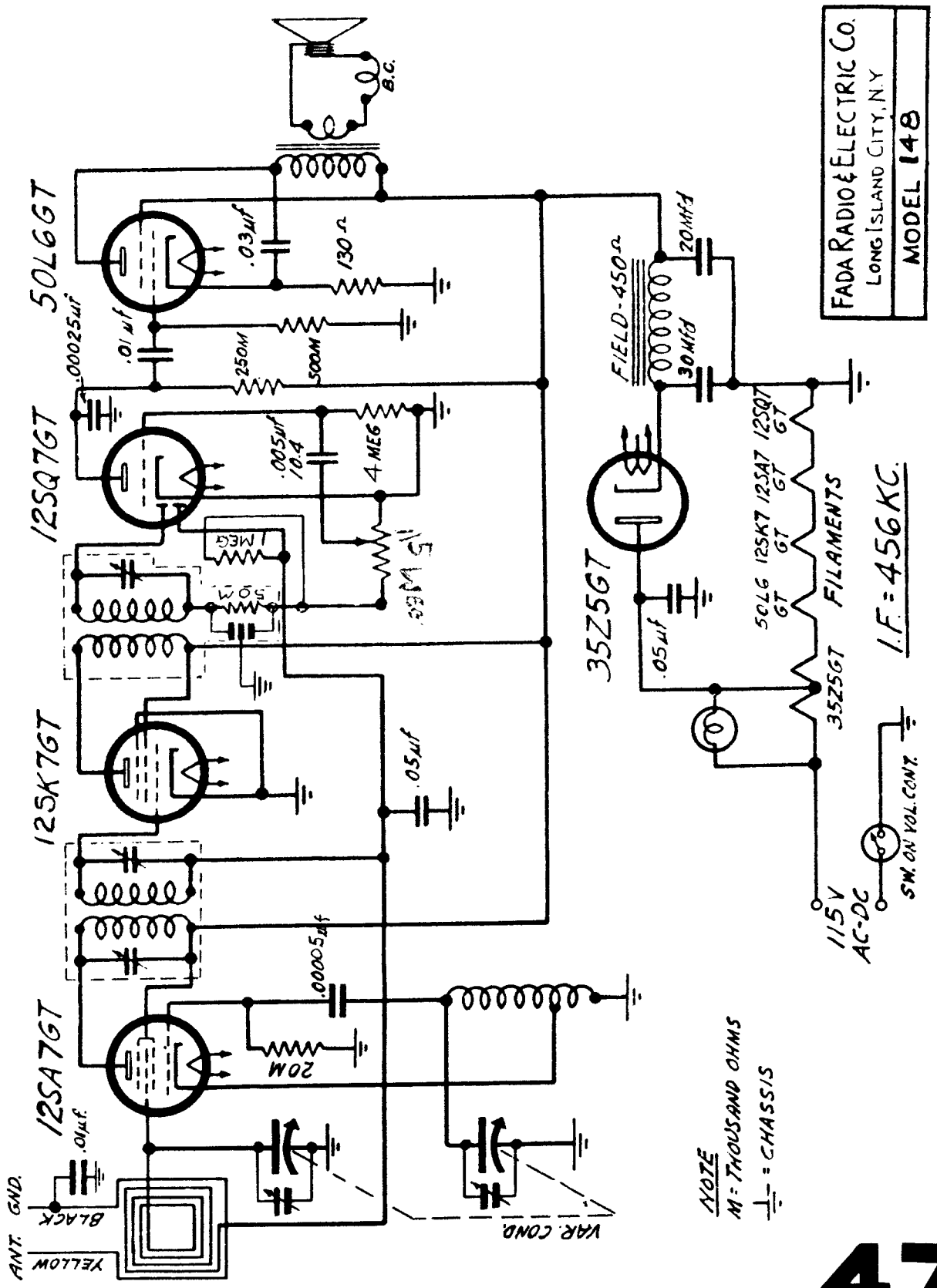
FADA RADIO & ELECTRIC CO.
LONG ISLAND CITY, N.Y.
MODEL 148
50L6GT
12SQ7GT
12SK7GT
12SA7GT
35Z5GT
B.C.
.03µf
130Ω
.01µf
.00025µf
250M
500M
.005µf
10.4
4 MEG
1 MEG
50M
25M
.05µf
.00005µf
20M
.01µf
FIELD-450Ω
20MFd
30MFd
12SQ7 GT
12SA7 GT
12SK7 GT
50L6 GT
FILAMENTS
35Z5GT
I.F. = 456 KC.
115V AC-DC
SW. ON VOL. CONT.
NOTE
M = THOUSAND OHMS
= CHASSIS
VAR. COND.
ANT.
GND.
BLACK
YELLOW

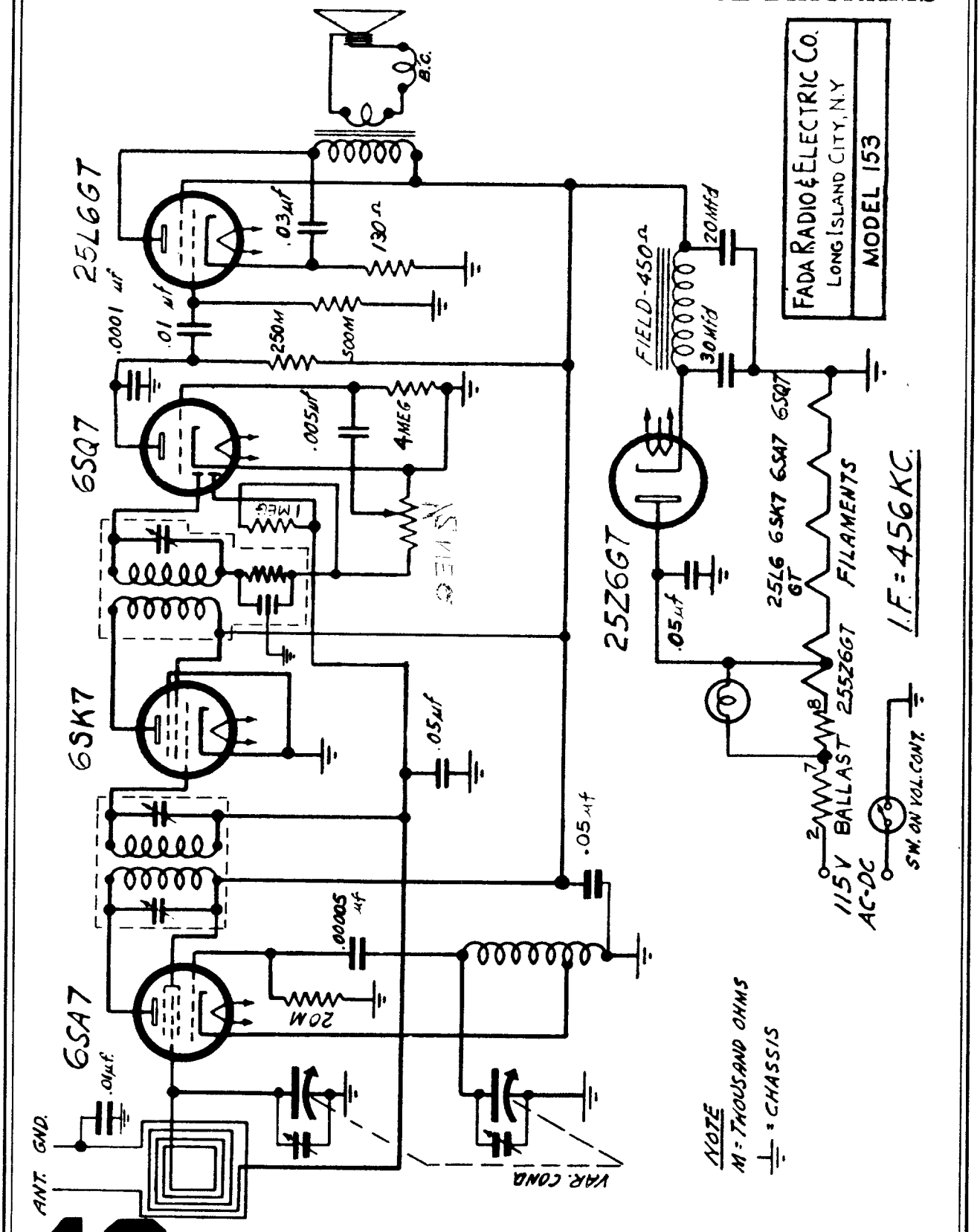
FADA RADIO & ELECTRIC CO.
LONG ISLAND CITY, N.Y.
MODEL 153
25L6GT
6SQ7
6SK7
6SA7
25Z6GT
B.C.
.03µf
130Ω
.0001 µf
.01 µf
250M
500M
.005µf
4MEG
1MEG
FIELD-450Ω
20Mfd
30Mfd
.05µf
.05µf
.05µf
.00005 µf
20M
.01µf
ANT.
GND.
VAR. CONA
6SQ7
6SA7
6SK7
25L6 GT
25Z6GT
FILAMENTS
BALLAST
115V AC-DC
SW. ON VOL. CONT.
I.F. = 456KC.
NOTE
M = THOUSAND OHMS
= CHASSIS

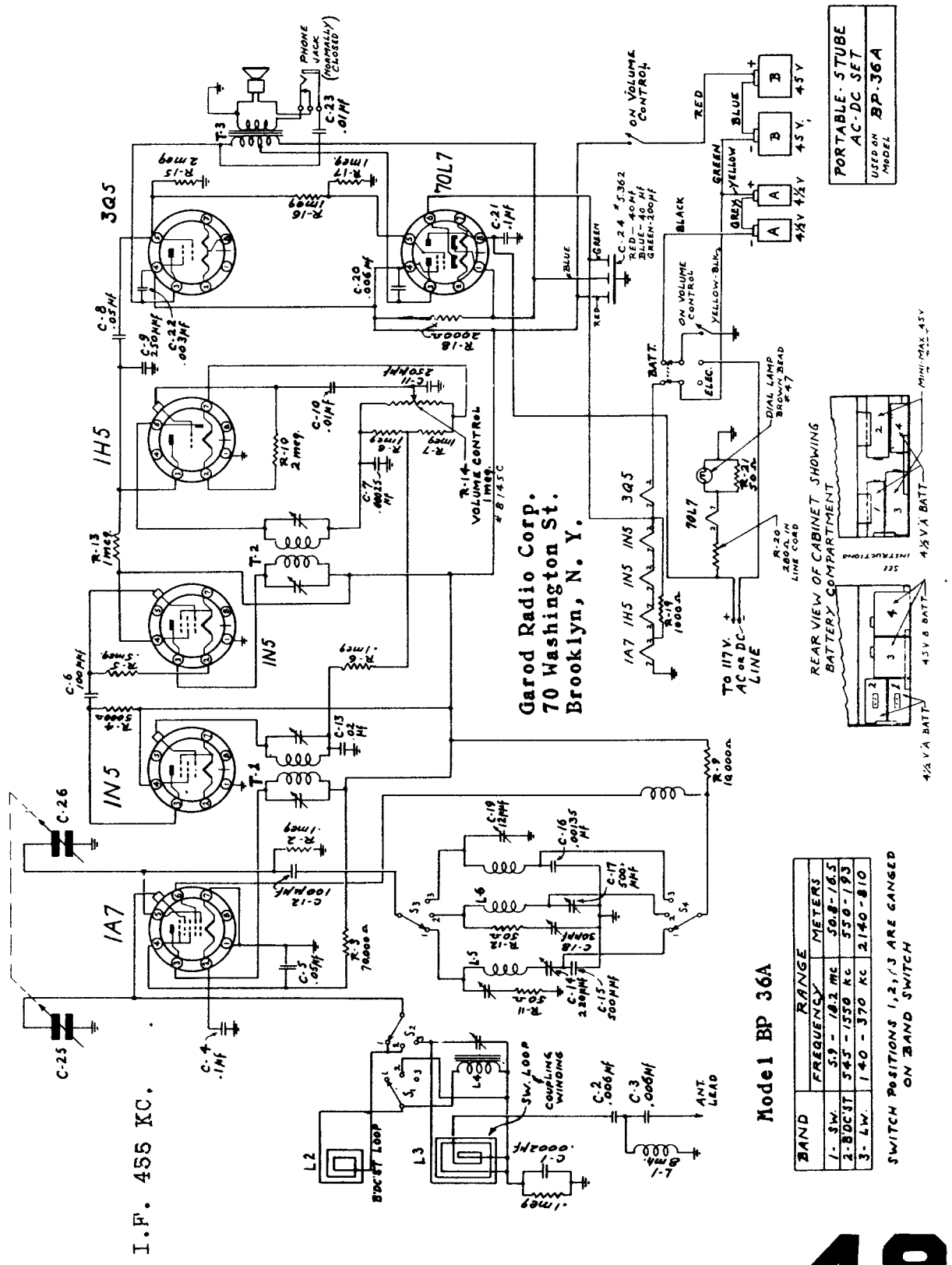
PORTABLE 5 TUBE AC-DC SET
USED ON MODEL BP-36A
Garod Radio Corp.
70 Washington St.
Brooklyn, N. Y.
Model BP 36A
BAND | RANGE | FREQUENCY | METERS
1- SW. | 5.9 - 18.2 mc. | 50.8 - 16.5
2- B'DC'ST | 545 - 1550 kc. | 550 - 193
3- LW. | 140 - 370 kc. | 2140 - 810
SWITCH POSITIONS 1,2,&3 ARE GANGED ON BAND SWITCH
REAR VIEW OF CABINET SHOWING BATTERY COMPARTMENT
I.F. 455 KC.
3Q5
1H5
1N5
1A7
70L7
TO 117 V. AC or DC LINE
ON VOLUME CONTROL
DIAL LAMP
BROWN BEAD #47
BATT.
ELEC.
BLACK
RED
BLUE
GREEN
YELLOW
YELLOW-BLK.
PHONE JACK (NORMALLY CLOSED)
BOX-ST LOOP
SW. LOOP COUPLING WINDING
ANT. LEAD
4½ V. A BATT.
45 V. B BATT.
MINI-MAX 45V.

MANUAL OF 1941 MOST POPULAR SERVICE DIAGRAMS

Models J-51, J-53, J-54, and J-54W

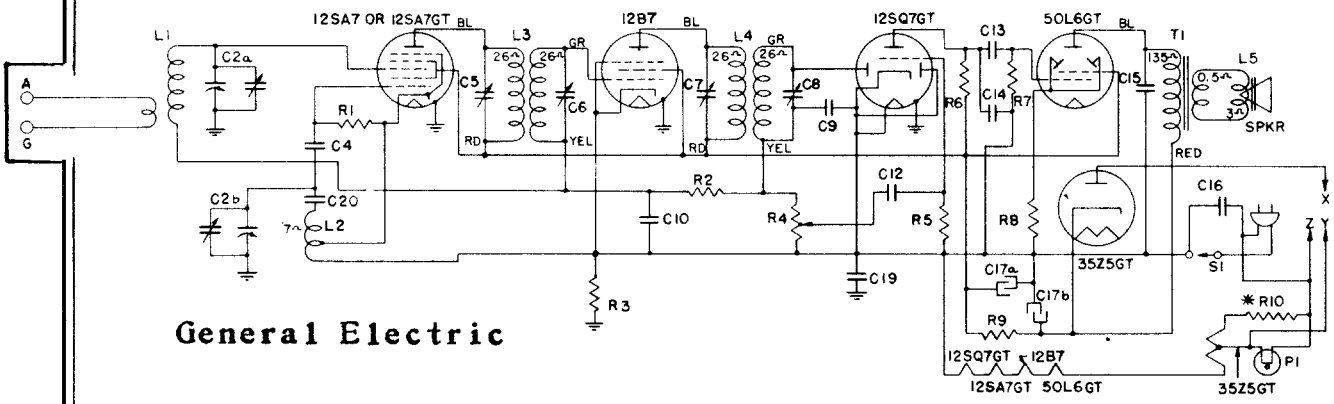

General Electric

*"A" rated receivers have "X" connected to "Y" and R-10 is shorted. "C" rated receivers have "X" connected to "Z."

PARTS DESCRIPTION LIST

Symbol	Description	Symbol	Description	Symbol	Description
C2a	Antenna section of tuning condenser	C17b	40 mfd. 150 V. dry electrolytic	R4	0.5 megohms volume control
C2b	Oscillator section of tuning condenser	C19	0.2 mfd. paper capacitor	R5	4.7 megohms carbon resistor
C4	47 mmf. mica capacitor	C20	.01 mfd. paper capacitor	R6	470,000 ohms carbon resistor
C9	470 mmf. mica capacitor	L1	Beam-a-Scope	R7	470,000 ohms carbon resistor
C10	.05 mfd. paper capacitor	L2	Oscillator Coil	R8	150 ohms carbon resistor
C12	.005 mfd. paper capacitor	L3	1st. I.F. transformer	R9	1200 ohms 1 W. carbon resistor
C13	.005 mfd. paper capacitor	L4	2nd I.F. transformer	R10	13 ohms carbon resistor
C14	330 mmf. mica capacitor	P1	Dial lamp, MAZDA No. 47	S1	Power switch
C15	.01 mfd. paper capacitor	R1	33,000 ohms carbon resistor	T1	Output transformer
C16	.05 mfd. paper capacitor	R2	2.2 megohms carbon resistor		
C17a	30 mfd. 150 V. dry electrolytic	R3	470,000 ohms carbon resistor		

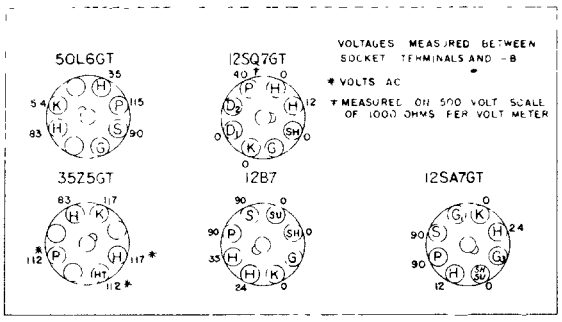

BOTTOM VIEW OF CHASSIS

AC LINE VOLTS-117 MAX VOLUME GANG CLOSED NO SIGNAL

ALIGNMENT PROCEDURE

Alignment Frequencies

I.F. . . . . 455 KC

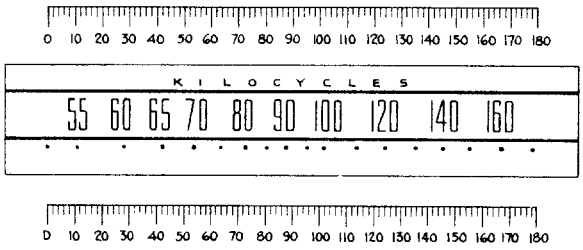

Frequency-degree Reference Chart

GENERAL INFORMATION

Models J-51, J-53, J-54 and J-54W are compact, five-tube superheterodyne receivers which can be operated from either an AC or DC source of power. Model J-51 and J-53 cabinets are in matched walnut veneers. Model J-54 and J-54W cabinets are plastic in oak and gray-white respectively. All models incorporate the following design features: Built-in Beam-a-Scope, 5-inch dynapower speaker, increased dial length, automatic volume control, and beam power output.

The glass tubes used in the converter and detector stages are interchangeable with metal tubes if the receiver is realigned following the change.

Precaution

If the signal generator is AC operated use an isolating transformer between the power supply and the radio receiver power input. The use of an isolating capacitor is not recommended as AC current through the capacitor will introduce hum modulation and/or create the possibility of a burned-out signal generator attenuator.

Special Service Information

The following information will be very useful in servicing receivers if a vacuum tube voltmeter or similar voltage measuring instrument is available.

(1) Stage Gains — Gain*
- Antenna Post to Converter Grid. . . . 4.0 at 1000 KC
- R.F. on Converter Grid to I.F. on I.F. Amplifier Grid. . . . . 40 at 1000 KC
- I.F. on Converter Grid to I.F. on I.F. Amplifier Grid. . . . . 50 at 455 KC
- I.F. Amplifier Grid to Detector Plate. . 50 at 455 KC

(2) 0.15-volt, 400-cycle signal across the volume control will give ½-watt speaker output.* (Volume control turned to maximum.)

(3) Average DC voltage developed across oscillator grid resistor (R-1). . . . . 15 volts

* Variations of ± 20% permissible. All readings obtained with enough signal input to give ½-watt speaker output.

COMPILED BY M. N. BEITMAN, SUPREME PUBLICATIONS

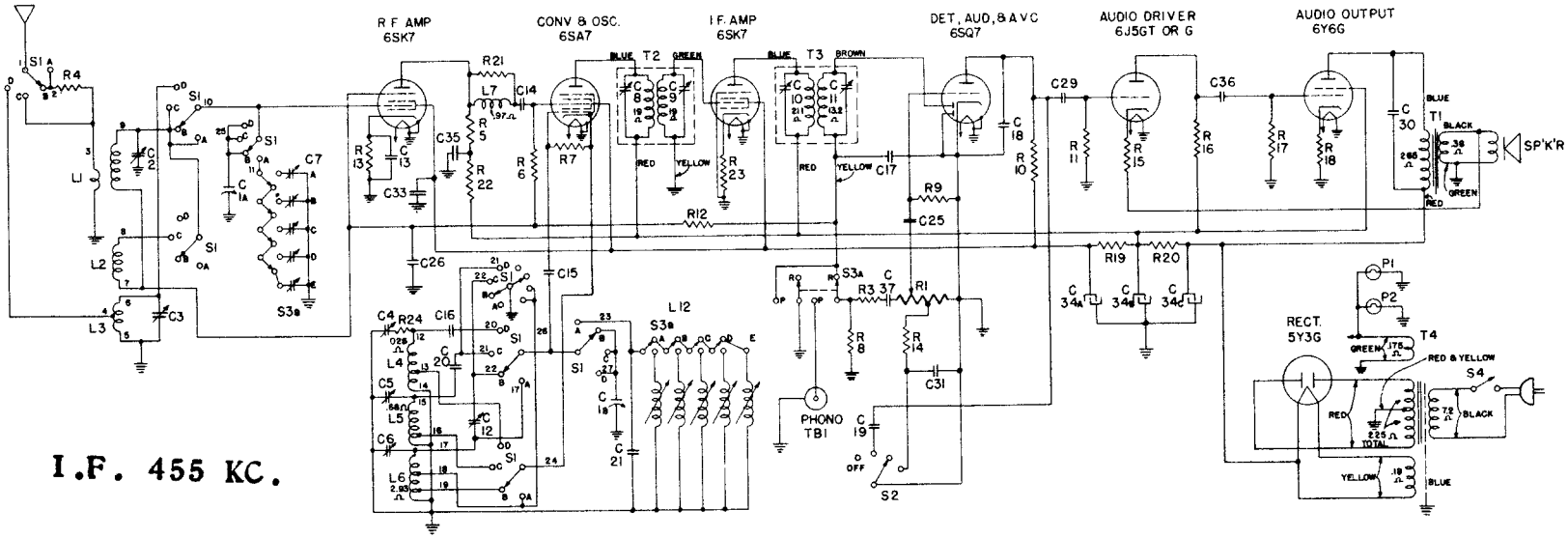

Symbol	Description	Symbol	Description	Symbol	Description	Symbol	Description
C1A	Antenna section of tuning condenser	C25	.02 mfd. paper capacitor	L7	R.F. interstage coil	R16	100,000 ohms carbon resistor
C1B	Oscillator section of tuning condenser	C26	.05 mfd. paper capacitor	L12	Station selector oscillator coils	R17	330,000 ohms carbon resistor
C2	"BC" band antenna trimmer	C29	.005 mfd. paper capacitor	P1	Dial lamp, Mazda No. 44	R18	270 ohms 1 W. carbon resistor
C3	"SW2" band antenna trimmer	C30	.01 mfd. paper capacitor	P2	Dial lamp, Mazda No. 44	R19	3300 ohms 1 W. carbon resistor
C4	"SW2" band oscillator trimmer	C31	.005 mfd. paper capacitor	R1	2 megohm volume control	R20	1800 ohms 2 W. carbon resistor
C5	"SW1" band oscillator trimmer	C33	.01 mfd. paper capacitor	R3	47,000 ohms carbon resistor	R21	10,000 ohms carbon resistor
C6	"BC" band oscillator trimmer	C34A	10 mfd. 250 V. dry electrolytic	R4	1000 ohms carbon resistor	R22	1000 ohms carbon resistor
C7	Station selector antenna trimmer strip	C34B	15 mfd. 250 V. dry electrolytic	R5	3300 ohms carbon resistor	R23	150 ohms carbon resistor
C12	"BC" band padding trimmer	C34C	30 mfd. 250 V. dry electrolytic	R6	47,000 ohms carbon resistor	R24	27 ohms carbon resistor
C13	.01 mfd. paper capacitor	C35	.01 mfd. paper capacitor	R7	22,000 ohms carbon resistor	S1	Band switch
C14	100 mmf. mica capacitor	C36	.01 mfd. paper capacitor	R8	470,000 ohms carbon resistor	S2	Tone control switch
C15	47 mmf. mica capacitor	C37	.005 mfd. paper capacitor	R9	4.7 megohms carbon resistor	S3A	Phono switch
C16	.008 mfd. paper capacitor	L1	"BC" Band Beam-a-Scope	R10	330,000 ohms carbon resistor	S3B	Station selector switch
C17	220 mmf. mica capacitor	L2	"SW1" band antenna coil	R11	470,000 ohms carbon resistor	S4	Power switch
C18	150 mmf. mica capacitor	L3	"SW2" band Beam-a-Scope	R12	2.2 megohms carbon resistor	T1	Output transformer
C19	.002 mfd. paper capacitor	L4	"SW2" band oscillator coil	R13	47 ohms carbon resistor	T2	1st I.F. transformer
C20	2400 mmf. ±5% mica capacitor	L5	"SW1" band oscillator coil	R14	100,000 ohms carbon resistor	T3	2nd I.F. transformer
C21	750 mmf. silvered mica capacitor	L6	"BC" band oscillator coil	R15	3300 ohms carbon resistor	T4	Power transformer

Chassis or Beam-a-Scope Removal

Note: Care must be exercised in removing the chassis to avoid changing the shape of either the short-wave or broadcast loops. These loops are factory formed to give a certain inductance and any alterations in the loops in the field will throw the chassis out of alignment.

When disconnecting the short-wave loop leads from the loop, be sure to support the loop while pulling off the connections. Failure to support the loop may cause the staples to loosen and result in the loop rattling in the cabinet.

GENERAL ELECTRIC
SEVEN-TUBE GOLDEN TONE RADIO
MODEL J-71

Symbol	Description
C1A	Antenna section of tuning condenser
C1B	Oscillator section of tuning condenser
C2	"SW2" band antenna trimmer
C3	Touch tuning trimmer strip
C4	.01 mfd. paper capacitor
C5	0.1 mfd. paper capacitor
C6	100 mmf. mica capacitor
C11	.001 mfd. paper capacitor
C12	.03 mfd. paper capacitor
C13	.03 mfd. paper capacitor
C14	.02 mfd. paper capacitor
C15	100 mmf. 1000 V. mica capacitor
C16	.002 mfd. 1000 V. paper capacitor
C17	220 mmf. mica capacitor
C18	.01 mfd. paper capacitor
C19	"SW2" band oscillator trimmer
C20	.008 mfd. paper capacitor
C21	47 mmf. mica capacitor
C22	"SW1" band oscillator trimmer
C23	2400 mmf. ±5% mica capacitor
C24	"BC" band oscillator trimmer
C25	"BC" band oscillator padder
C26	750 mmf. silvered mica capacitor
C27	.005 mfd. paper capacitor
C28	.05 mfd. paper capacitor
C29	.005 mfd. paper capacitor
C30	.004 mfd. paper capacitor
C31	150 mmf. mica capacitor
C32	.01 mfd. paper capacitor
C33A	10 mfd. 350 V. dry electrolytic
C33B	15 mfd. 400 V. dry electrolytic
C33C	30 mfd. 400 V. dry electrolytic
C34	.002 mfd. 1000 V. paper capacitor
C35	.01 mfd. paper capacitor
L1	"BC" and "SW1" band Beam-a-Scope
L2	"SW1" band antenna coil
L3	"SW2" band Beam-a-Scope
L4	R.F. interstage coil
L5	"SW2" band oscillator coil
L6	"SW1" band oscillator coil
L7	"BC" band oscillator coil
L8	Touch tuning coil strip
P1	Dial lamp, Mazda No. 44
P2	Dial lamp, Mazda No. 44
R1	1000 ohms carbon resistor
R2	47 ohms carbon resistor
R3	10,000 ohms carbon resistor
R4	3300 ohms 1 W. carbon resistor
R5	47,000 ohms carbon resistor
R6	22,000 ohms carbon resistor
R7	2.2 megohms carbon resistor
R8	150 ohms carbon resistor
R9	470,000 ohms carbon resistor
R10	3300 ohms carbon resistor
R11	100,000 ohms carbon resistor
R12	220,000 ohms carbon resistor
R13	220,000 ohms carbon resistor
R14	150,000 ohms carbon resistor
R15	270,000 ohms carbon resistor
R16	4700 ohms carbon resistor
R17	1000 ohms carbon resistor
R18	180 ohms 2 W. carbon resistor
R19	1000 ohms carbon resistor
R20	1800 ohms carbon resistor
R21	47,000 ohms carbon resistor
R22	6800 ohms carbon resistor
R23	27 ohms carbon resistor
R24	47,000 ohms carbon resistor
R25	2 megohms volume control (½ megohm tap)
R26	56,000 ohms carbon resistor
R27	5.6 megohms carbon resistor
R28	220,000 ohms carbon resistor
R29	33,000 ohms carbon resistor
R30	10,000 ohms 3 W. carbon resistor
R31	1600 ohms 4 W. candohm resistor
R32	47,000 ohms carbon resistor
R33	470,000 ohms carbon resistor
R34	1000 ohms carbon resistor
S1	Band switch
S2	Tone control switch
S3	Touch tuning switch
S4	Phono key
S5	Power key
T1	1st I.F. transformer
T2	2nd I.F. transformer
T3	Output transformer
T4	50-60-cycle power transformer
T5	25-cycle power transformer

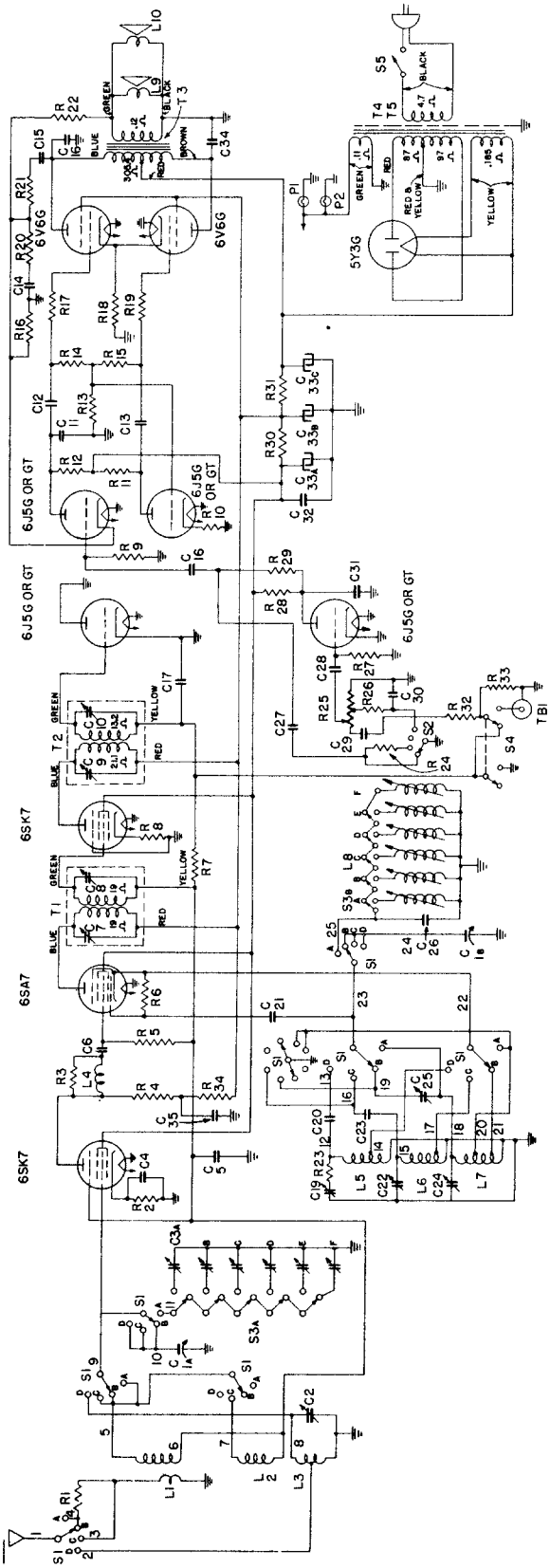

Tuning Frequency Range

Broadcast Band..... 540–1700 KC
Short-wave Band No. 1.....2400–7000 KC
Short-wave Band No. 2.....7000–22,000 KC

Intermediate Frequency.....455 KC

GENERAL ELECTRIC

MODEL J-105

COMPILED BY M. N. BEITMAN, SUPREME PUBLICATIONS

MANUAL OF 1941 MOST POPULAR SERVICE DIAGRAMS

INSTRUCTIONS

GENERAL ELECTRIC

Model JB-410

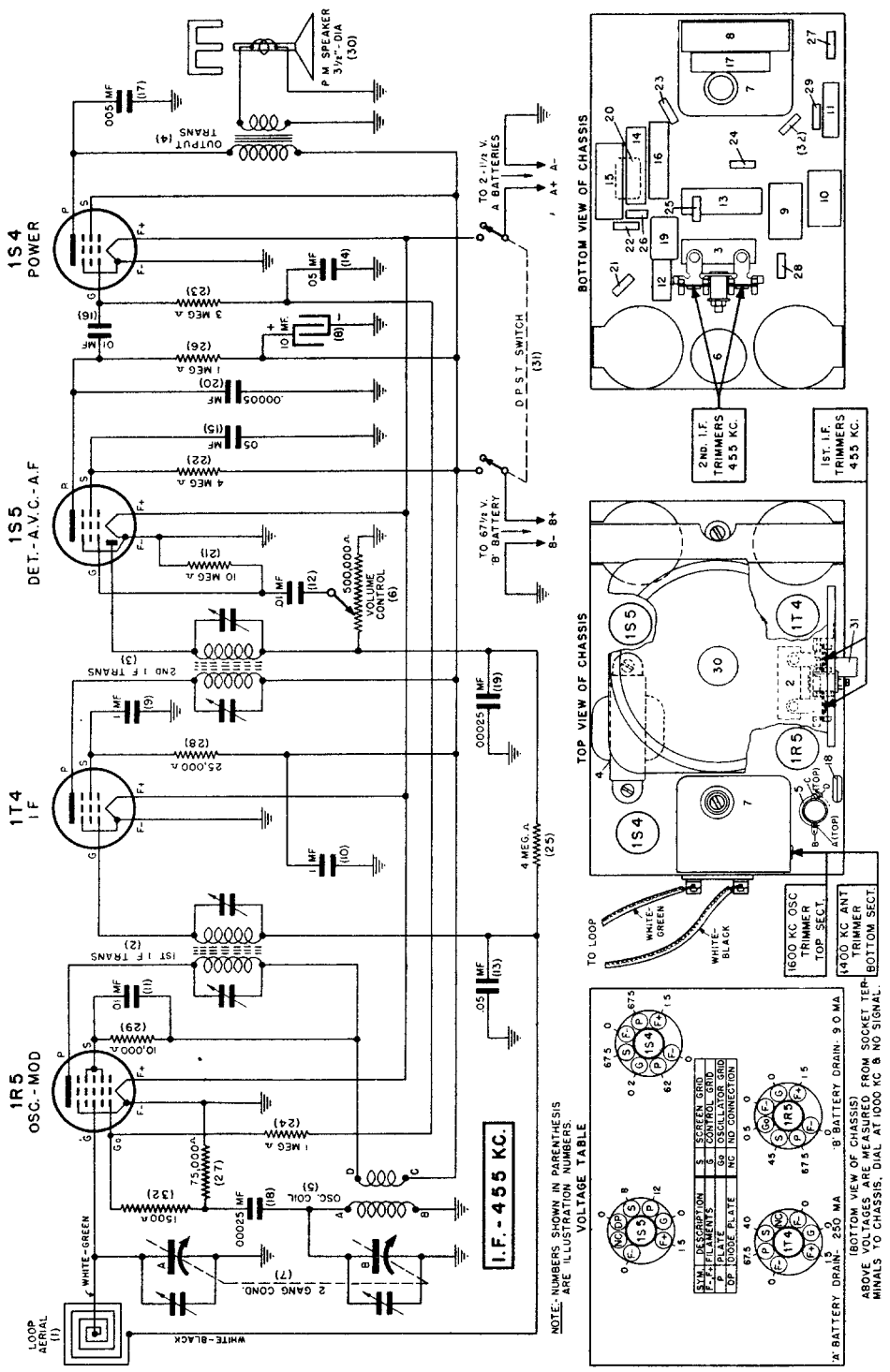

Alignment Frequencies I.F. .....455 K.C.
R.F. .....1600 & 1400 K.C.

I.F. Alignment

Connect an output meter across the voice coil. Rotate the volume to maximum. Set test oscillator to 455 K.C. and apply signal to lug on stator of gang condenser to which loop is connected through a .05 Mfd. capacitor. Align the second I.F. transformer trimmers, next adjust the first I.F. transformer trimmers. Keep test oscillator output as low as a readable meter reading will permit.

R.F. Alignment

Couple test oscillator output to loop in case cover. Adjust test oscillator and receiver dial to exactly 1600 K.C. Peak 1600 K.C. oscillator trimmer for maximum output. Change test oscillator signal and receiver dial to approximately 1400 K.C. Then while rocking gang condenser trim 1400 K.C. antenna trimmer for maximum output.

COMPILED BY M. N. BEITMAN, SUPREME PUBLICATIONS

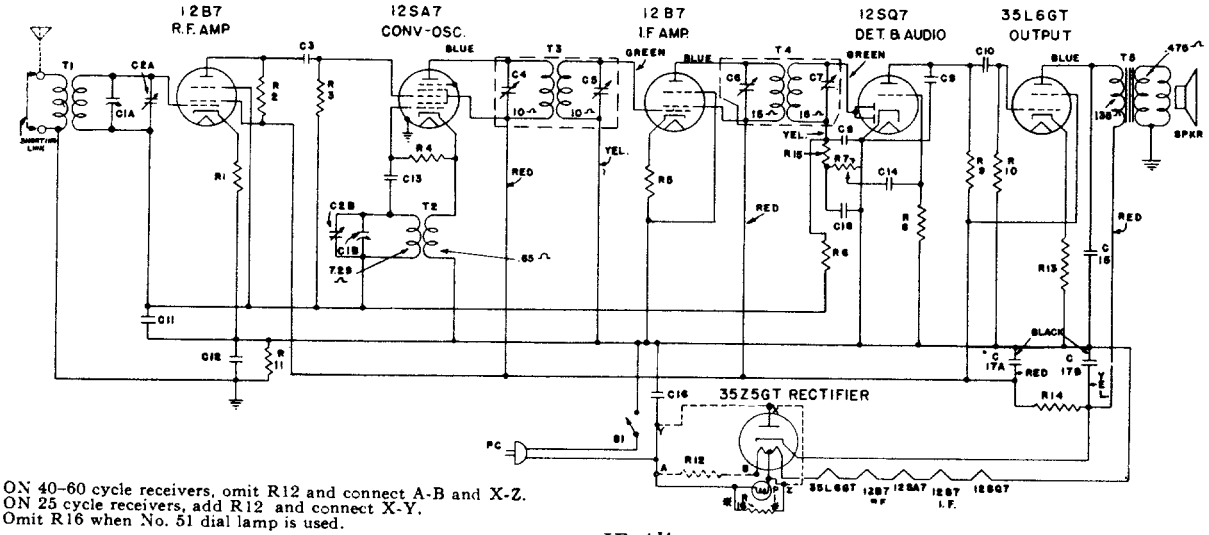

ON 40-60 cycle receivers, omit R12 and connect A-B and X-Z.
ON 25 cycle receivers, add R12 and connect X-Y.
Omit R16 when No. 51 dial lamp is used.

General Electric

Models J-602, J-603

Tuning Frequency Range.....540-1720 KC

Intermediate Frequency.....455 KC

Electrical Power Output (117 line volts)
Undistorted.....1.0 watts
Maximum.....1.5 watts

Loudspeaker—PM Dynamic
Outside Cone Diameter.....5 inches
Voice Coil Impedance (400 cycles).3.5 ohms

Tubes
RF Amplifier.....GE-12B7
Converter—Oscillator.....GE-12SA7
IF Amplifier.....GE-12B7
Detector, Audio, and AVC.....GE-12SQ7
Power Output.....GE-35L6GT
Rectifier.....GE-35Z5GT
Dial Lamp (see paragraph below)..MAZDA #47 or #51

GENERAL INFORMATION

Models J602 and J603 are six-tube AC-DC superheterodyne receivers with Underwriters' Approval listing. The Model J602 is housed in a mahogany plastic cabinet, while the Model J603 has an ivory plastic cabinet.

Both the MAZDA No. 47 and No. 51 dial lamps were used during production. When lamp No. 51 is used, the resistor R16 should be omitted.

Either the metal or glass type 12B7 tube may be used in the RF or IF stage. However when the glass tube is used in the IF stage, a tube shield must be used to prevent oscillation at the low frequency end of the broadcast band.

ALIGNMENT PROCEDURE

Alignment Frequencies
RF.....1500 KC
IF.....455 KC

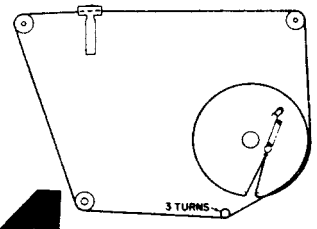

Dial Stringing Diagram

IF Alignment

Connect an output meter across the voice coil. Turn the volume control to maximum. Set test oscillator to 155 KC and keep the oscillator output as low as a readable meter reading will permit.

Apply signal to the 12SA7 converter grid through a .05 mfd. capacitor and align progressively the trimmers in the 2nd and 1st IF transformers.

RF Alignment

When making the following alignment the loop antenna must be bolted to the chassis by the screw and spacer mounting. The RF signal should be capacity coupled to the receiver loop by placing a two-foot piece of wire for an antenna on the test oscillator output post (high side). Keeping this antenna two feet or more from the receiver loop will generally insure freedom from too much coupling. Metal objects such as meters, tools, etc., should not be placed in close proximity to the loop when making this alignment.

With the gang condenser plates completely closed, the pointer should line up with the first mark on the left of the scale. Set the signal generator to 1500 KC. Align (C-1b) to the signal while the pointer is on the 1500 KC mark. Peak (C-1a) for maximum output.

Stock No.	Symbol	Description
RC-7049	C-1a, 1b, 2a, 2b	CONDENSER—Tuning condenser.....
*RC-235	C-3	CAPACITOR—100 Mmf., mica.....
*RC-242	C-8	CAPACITOR—150 Mmf., mica.....
*RC-274	C-9	CAPACITOR—330 Mmf., mica.....
*RC-039	C-10	CAPACITOR—.01 Mfd., 600 V. paper.....
*RC-072	C-11	CAPACITOR—.05 Mfd., 200 V. paper.....
*RC-104	C-12	CAPACITOR—0.1 Mfd., 600 V. paper.....
*RC-216	C-13	CAPACITOR—47 Mmf., mica.....
*RC-023	C-14	CAPACITOR—.005 Mfd., 600 V. paper.....
*RC-039	C-15	CAPACITOR—.01 Mfd., 600 V. paper.....
*RC-092	C-16	CAPACITOR—.05 Mfd., 600 V. paper.....
RC-5183	C-17a, 17b	CAPACITOR—50 Mfd., 60 Mfd., electrolytic
*RC-235	C-18	CAPACITOR—100 Mmf., mica.....
*RQ-1227	R-1	RESISTOR—47 ohm, ½ W. carbon.....
*RQ-1275	R-2	RESISTOR—4700 ohm, ½ W. carbon.....
*RQ-1299	R-3	RESISTOR—47,000 ohm, ½ W. carbon.....
*RQ-1295	R-4	RESISTOR—33,000 ohm, ½ W. carbon.....
*RQ-1235	R-5	RESISTOR—100 ohm, ½ W. carbon.....
*RQ-1339	R-6	RESISTOR—2.2 megohm, ½ W. carbon.....
RV-120	R-7, S-1	VOLUME CONTROL—0.5 megohm, combined with power switch.....
*RQ-1349	R-8	RESISTOR—5.6 megohm, ½ W. carbon.....
*RQ-1323	R-9, 10, 11	RESISTOR—470,000 ohm, ½ W. carbon.....
*RQ-1213	R-12	RESISTOR—12 ohm, ½ W. carbon.....
*RQ-1239	R-13	RESISTOR—150 ohm, ½ W. carbon.....
RQ-651	R-14	RESISTOR—1000 ohm, 2 W. carbon.....
*RQ-1299	R-15	RESISTOR—47,000 ohm, ½ W. carbon.....
*RQ-1255	R-16	RESISTOR—680 ohm, ½ W. carbon.....

*Used in previous receivers.

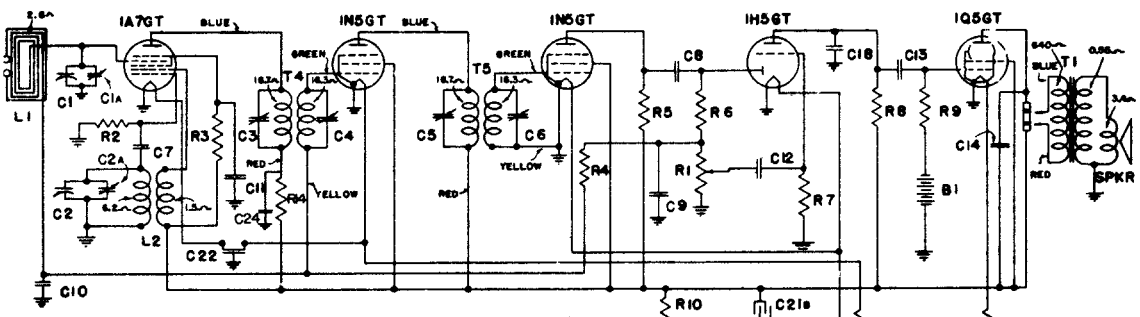

POWER SELECTOR SWITCH OPERATION

POSITION	CONTACTS CONNECTED
"OFF"	ALL CONTACTS OPEN
"BATTERY"	#1 to #2; #4 to #5; #7* to #8
"AC"	#1 to #2 to #3; #4 to #5; #8 to #9
"CHARGE"	#2 to #3; #8 to #9

* #7 terminal is not connected to circuit

I.F. 455 KC.

Stock No.	Symbol	Description	List Price
RC-7054	C-1, 2	CONDENSER—Tuning condenser and trimmers	$1.55
*RC-216	C-7	CAPACITOR—47 mmf, mica	.25
*RC-235	C-8, 9	CAPACITOR—100 mmf., mica	.25
*RC-072	C-10	CAPACITOR—.05 Mfd., 200 V. paper	.25
*RC-096	C-11	CAPACITOR—0.1 Mfd., 200 V. paper	.30
*RC-023	C-12, 13	CAPACITOR—.005 Mfd., 600 V. paper	.25
*RC-039	C-14	CAPACITOR—.01 Mfd., 600 V. paper	.25
*RC-096	C-15	CAPACITOR—0.1 Mfd., 200 V. paper	.30
*RC-072	C-16	CAPACITOR—.05 Mfd., 200 V. paper	.25
*RC-027	C-17	CAPACITOR—.006 Mfd., 100 V. paper	.30
*RC-235	C-18	CAPACITOR—100 mmf., mica	.25
*RC-156A	C-19, 20	CAPACITOR—0.5 Mfd., 120 V.	.45
RC-5189	C-21A, 21B	CAPACITOR—15 Mfd., 150 V. dry electrolytic	.75
	C-21C	CAPACITOR—1200 Mfd., 2 V. dry electrolytic	
*RC-156A	C-22	CAPACITOR—0.5 Mfd., 120 V. paper	.45
*RC-092	C-23	CAPACITOR—.05 Mfd., 600 V. paper	.30
RV-125	R-1	VOLUME CONTROL—0.5 megohm volume control	.95
*RQ-1315	R-2	RESISTOR—220,000 ohm, ½ W. carbon	.70—5
*RQ-1299	R-3	RESISTOR—47,000 ohm, ½ W. carbon	.70—5
*RQ-1339	R-4	RESISTOR—2.2 megohm, ½ W. carbon	.70—5
*RQ-1293	R-5	RESISTOR—27,000 ohm, ½ W. carbon	.70—5
*RQ-1299	R-6	RESISTOR—47,000 ohm, ½ W. carbon	.70—5
*RQ-1347	R-7	RESISTOR—4.7 megohm, ½ W. carbon	.70—5

Stock No.	Symbol	Description	List Price
*RQ-1331	R-8	RESISTOR—1.0 megohm, ½ W. carbon	$0.70—5
*RQ-1339	R-9	RESISTOR—2.2 megohm, ½ W. carbon	.70—5
*RQ-1259	R-10	RESISTOR—1,000 ohm, ½ W. carbon	.70—5
RQ-1208	R-11, 12, 13	RESISTOR—8.2 ohm, ½ W. carbon	.70—5
RC-2036	B-1	CELL—5.0 V. bias cell assembly	.55
RL-568	L-1	BEAM-A-SCOPE—Loop antenna assembly (inside cover)	.90
RL-2055	L-2	COIL—Oscillator coil	.30
RL-367	L-5	CHOKE—B choke	.20
RL-366	L-6	CHOKE—Vibrator choke	.55
RL-567	L-7	BEAM-A-SCOPE—External loop antenna	.45
RL-365	L-8	CHOKE—Filament supply choke	.20
RS-3115	SW1	SWITCH—Power selector switch	.70
RT-4010	T-1	TRANSFORMER—Output transformer	.90
RT-0525	T-2	VIBRATOR—Vibrator power transformer	1.80
RT-0524	T-3	TRANSFORMER—50-60 cycle rectifier step-down transformer	1.20
RT-0527	T-3	TRANSFORMER—25 cycle rectifier step-down transformer	
RT-393	T-4	TRANSFORMER—1st I.F. transformer	.90
RT-392	T-5	TRANSFORMER—2nd I.F. transformer	.90
RV-204	V-1	VIBRATOR—Power supply synchronous vibrator	3.60
RR-802	X-1	RECTIFIER—Copper oxide rectifier	[illegible]
RS-1066	Spkr	SPEAKER—12" M speaker	4.6[illegible]

All power necessary for the operation of the receiver is supplied by the 2-volt built-in rechargeable battery. The tube filaments are heated directly by the two volts from the battery while the necessary high voltage for the screen and plates of the tubes is furnished by a synchronous vibrator used in conjunction with a step-up power transformer and its associated filter circuit. The synchronous vibrator operates on the two volts from the battery.

Provision has been made to charge the battery directly from the house current without removing the battery from the receiver circuit. Two charging positions are provided on the four-position power selector switch. The "Charge" position of this switch allows the battery to be charged at the rate of approximately 1.35 amperes from the house current during the period that the receiver is not being operated. The "AC" position of the switch allows the receiver to be operated at the same time that the battery is being charged. Under this condition, however, it takes a considerably longer period for a partially discharged battery to be fully restored due to the fact that current is taken from the battery to operate the receiver.

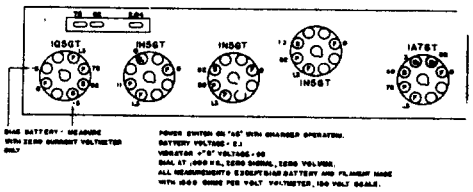

GENERAL ELECTRIC

MODEL LB-530

COMPILED BY M. N. BEITMAN, SUPREME PUBLICATIONS

SCHEMATIC DIAGRAM - ULTRA HIGH FREQUENCY FM-AM RECEIVER - MODEL S-27

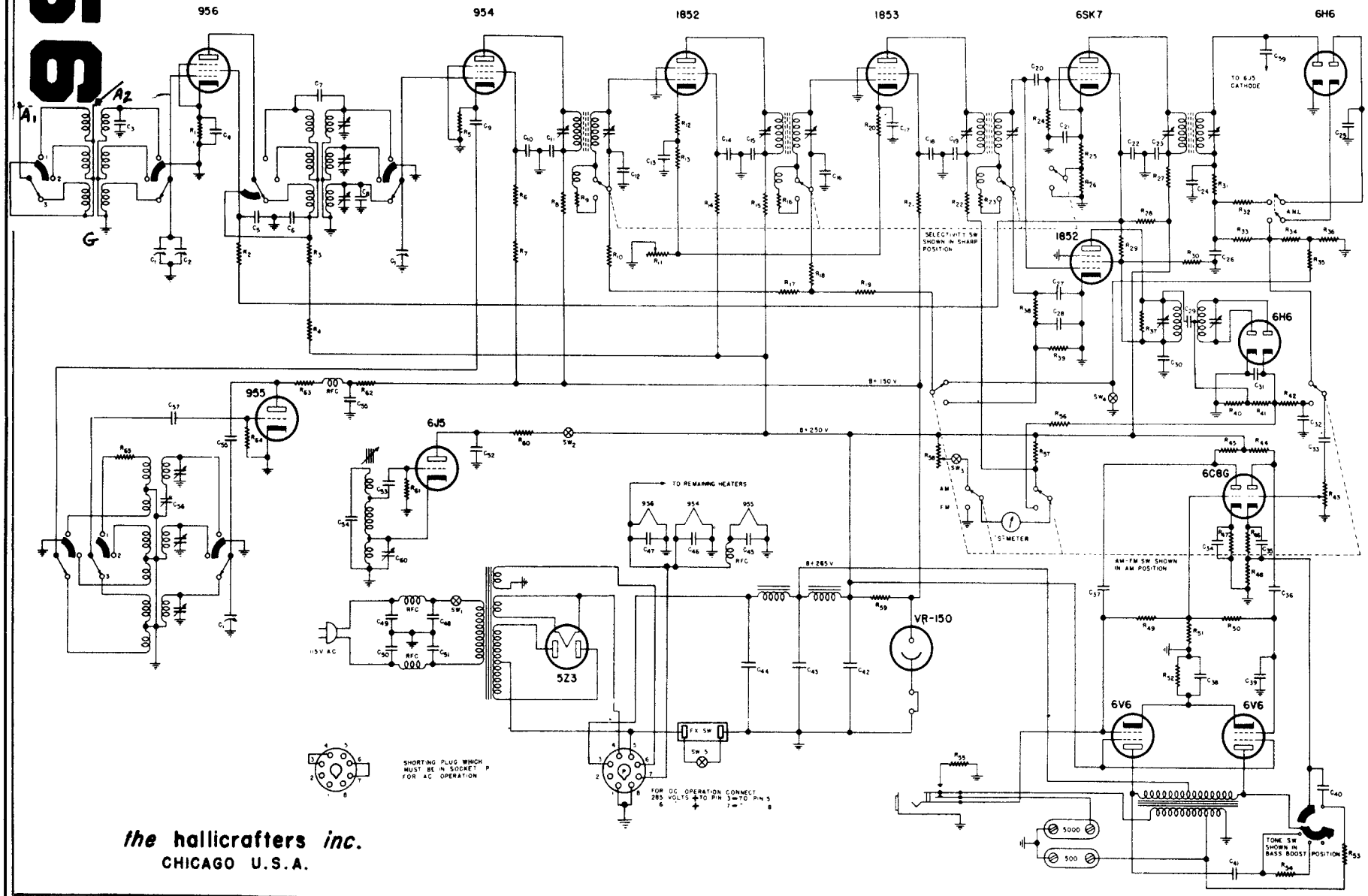

the **hallicrafters** *inc.*
CHICAGO U.S.A.

The Hallicrafters

S-27

RESISTORS

NO.	OHMS	WATTAGE
1	250	1/3
2	1,000	1/3
3	1,000	1/3
4	10,000	1-1/2
5	2,000	1/3
6	1,000	1/3
7	100,000	1/3
8	1,000	1/3
9	8	1/3
10	100,000	1/3
11	10,000	R.F. Gain Control
12	35	1/3
13	120	1/3
14	40,000	1/3
15	300	1/3
16	8	1/3
17	100,000	1/3
18	100,000	1/3
19	100,000	1/3
20	200	1/3
21	1,000	1/3
22	300	1/3
23	8	1/3
24	500,000	1/3
25	300	1/3
26	5,000	1/3
27	1,000	1/3
28	7,500	10 Wire Wound
29	2,000	1/3
30	20,000	1-1/2
31	50,000	1/3
32	1,000,000	1/3
33	100,000	1/3
34	250,000	1/3
35	500,000	1/3
36	250,000	1/3
37	15,000	1/3
38	50,000	1/3
39	250,000	1/3
40	100,000	1/3
41	100,000	1/3
42	200,000	1/3
43	500,000	Audio Gain Control
44	250,000	1/3
45	250,000	1/3
46	5,000	1/3
47	5,000	1/3
48	120	1/3
49	250,000	1/3
50	250,000	1/3
51	100,000	1/3
52	250	1-1/2
53	10,000	1/3
54	4,000	1-1/2
55	5,000	1-1/2
56	600,000	1/3
57	17	1/3 Wire Wound
58	1,500	S. Meter Zero Adj. Wire Wound
59	3,200	10
60	25,000	1-1/2
61	50,000	1/3
62	300	1/3
63	5,000	1/3
64	20,000	1/3
65	35	1/3

CONDENSERS

NO.	CAPACITY	VOLTAGE	TYPE
1	60 mmf	Per Section	Air
2	15 mmf	Ant.Trimmer	Air
3	5 mmf		3 Ceramicon
4	.002 mfd		Mica
5	300 mmf		Mica
6	.002 mfd		Mica
7	10. mmf		Ceramicon
8	10. mmf		Ceramicon
9	300 mmf		Mica
10	300 mmf		Mica
11	.01 mfd	600	Paper
12	.001 mfd		Mica
13	.02 mfd	400	Paper
14	.02 mfd	400	Paper
15	01 mfd	600	Paper
16	.001 mfd		Mica
17	.02 mfd	400	Paper
18	.02 .mfd	400	Paper
19	.01 mfd	600	Paper
20	50 mmf		Mica
21	.02 mfd	400	Paper
22	.02 mfd	400	Paper
23	.01 mfd	600	Paper
24	50 mmf		Mica
25	.05 mfd	400	Paper
26	50 mmf		Mica
27	100 mmf		Mica
28	500 mmf		Mica
29	25 mmf		Mica
30	.002 mfd		Mica
31	50 mmf		Mica
32	500 mmf		Mica
33	.05 mfd	400	Paper
34	30 mfd	25	Electrolytic
35	30 mfd	25	Electrolytic
36	.05 mfd	400	Paper
37	.05 mfd	400	Paper
38	20 mfd		Electrolytic
39	.002 mfd		Mica
40	.05 mfd	400	Paper
41	.05 mfd	400	Paper
42	10. mfd	350	Electrolytic
43	30 mfd	350	Electrolytic
44	10 mfd	400	Electrolytic
45	300 mmf		Mica
46	300 mmf		Mica
47	300 mmf		Mica
48	.01 mfd	600	Paper
49	.01 mfd	600	Paper
50	.01 mfd	600	Paper
51	.01 mfd	600	Paper
52	.002 mfd		Mica
53	100 mmf		Mica
54	200 mmf		Ceramicon
55	300 mmf		Mica
56	50 mmf		Ceramicon
57	.001 mfd		Mica
58	450 mmf		Pad
59	2 mmf		Twisted Pair
60	25 mmf		B.O. Pitch Control Air

I.F. 5.25 MC.

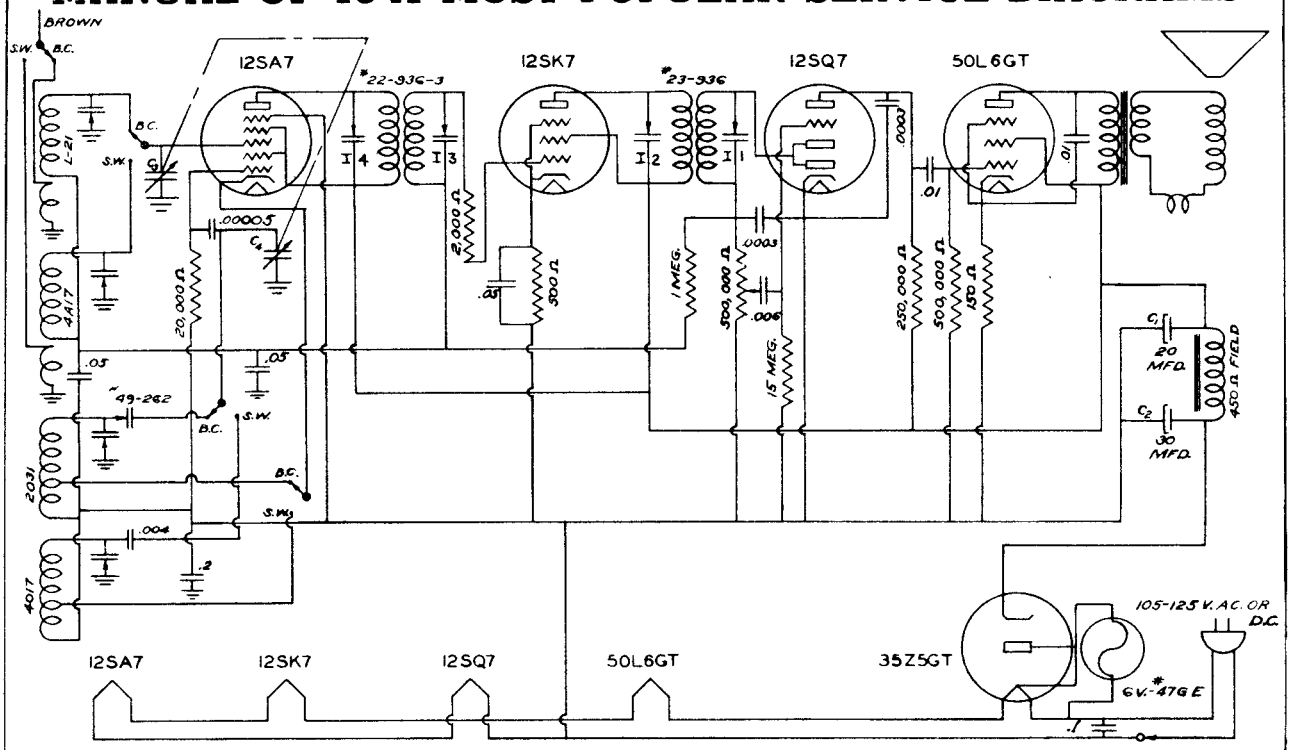

C, C2-20, 30 MFD.-150, 150 V.-NO. 47-266.
C3 C4-VARIABLE CONDENSER-NO. 63-270.
VOLUME CONTROL AND SWITCH-NO. 69-281

I. F.-465 K. C.

HOWARD RADIO CO.
MODEL 702

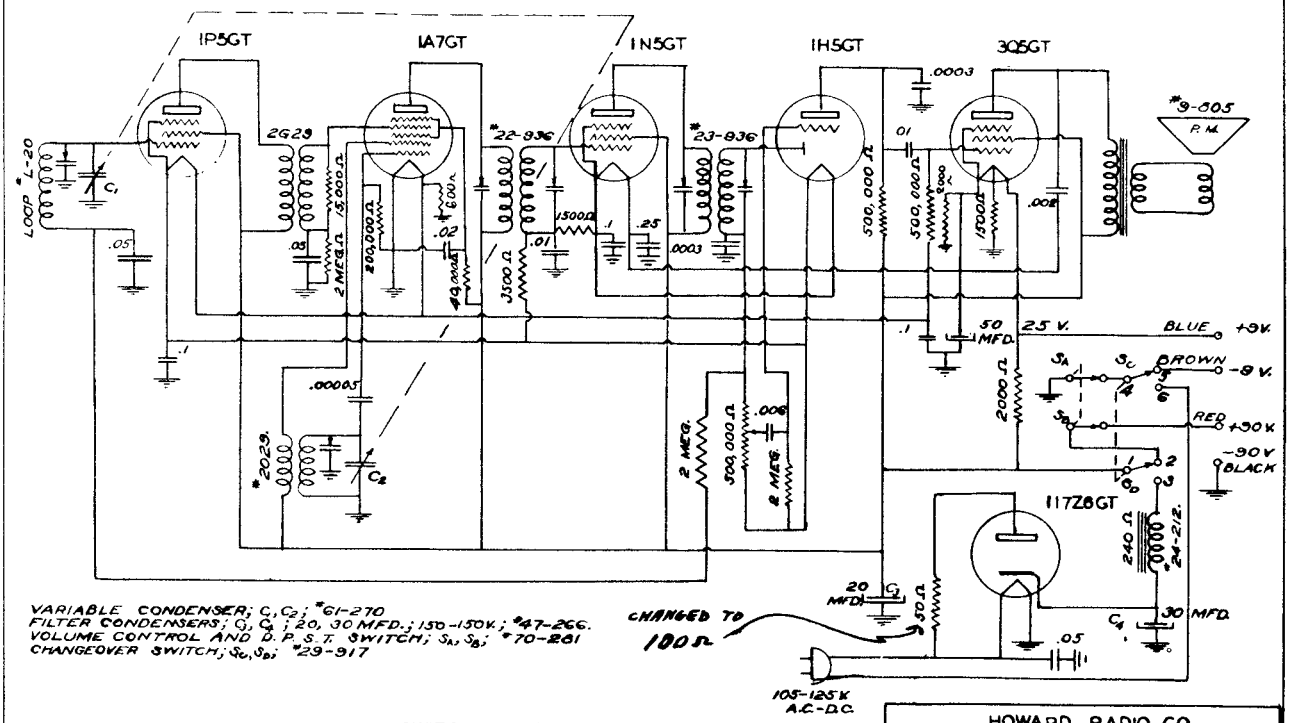

VARIABLE CONDENSER; C1, C2; *61-270
FILTER CONDENSERS; C3, C4; 20, 30 MFD.; 150-150 V.; *47-266.
VOLUME CONTROL AND D. P. S. T. SWITCH; S1, S2; *70-281
CHANGEOVER SWITCH; S3, S4; *29-917

SWITCH SHOWN IN POSITION FOR BATTERY OPERATION. FOR A. C. OR D. C. OPERATION, SWITCH CONNECTS TERMINAL 4 TO 6 AND 1 TO 3.

HOWARD RADIO CO.
MODEL 14ACB

I. F. 465 K. C.

MANUAL OF 1941 MOST POPULAR SERVICE DIAGRAMS

AS SWITCH IS SET TO HIGHER FREQUENCY BANDS THE SECONDARY COILS OF THE LOW FREQUENCY BANDS ARE SHORTED OUT

I. F. 465 K C.

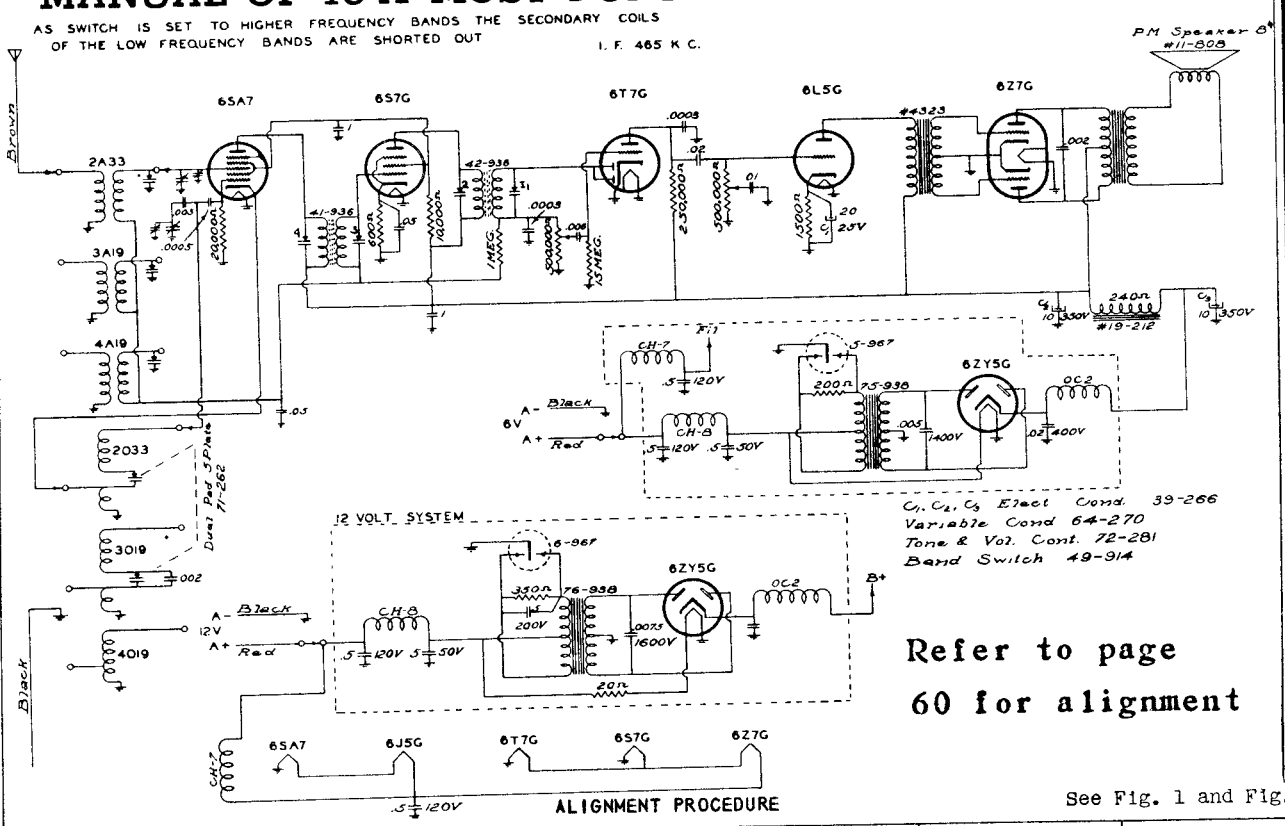

Refer to page 60 for alignment

See Fig. 1 and Fig. 2.

Wave-Band Switch Position	Position of Dial Pointer	Generator Frequency	Generator Connection	See Note	Trimmers Adjusted (In order shown)	Trimmer Function
Broadcast	Max. Cap.	465 KC	Converter Grid	A,D	I_1, I_2, I_3, I_4	IF
7-22 MC	21	21 MC	Ant. (Brown)	B	O_5, A_6	Osc.,Ant.
2.2-7 MC	6	6 MC	" "		O_7, A_8	Osc.,Ant.
2.2-7 MC	2.2	2.2 MC	" "		P_9	Osc.Pad.
Broadcast	1400	1400 KC	" "		O_{10}, A_{11}	Osc.,Ant.
Broadcast	600	600 KC	" "	C	P12	Osc.Pad.

A--Each step of the alignment should be repeated in the original order for greater accuracy. Keep output from Signal Generator low. The I.F. trimmers are reached through the two holes on the top of each I.F. can.

B--When aligning the short wave bands, do not adjust to the IMAGE frequency. For example, if the adjustment is correctly made at 21 MC, then a weaker image will be heard at 21,000 KC less 930 KC, or about 20,070 KC on the dial.

C--When adjusting this pad, move the tuning hand back and forth and adjust padder until the peak of greatest intensity is obtained.

D--See that the tuning hand is set exactly on the last line above 540 when the condenser is at maximum capacity.

SOCKET VOLTAGES
MODEL 765, 6 Volt

TUBE	FUNCTION	CATH-ODE	SCR. GRID	PLATE
6SA7	Mixer	3	70	145
6S7G	IF	3	70	145
6T7G	Det.	x	x	50
6L5G	Audio	6 V. Bias	x	145
6Z7G	PP Output	x	x	140

Howard Radio

MODEL 765		
DWG. NO. C83-715		9-5-40
DWN. BY.	CHCKD. BY.	APPVD. BY.
L. A. G.		JFR

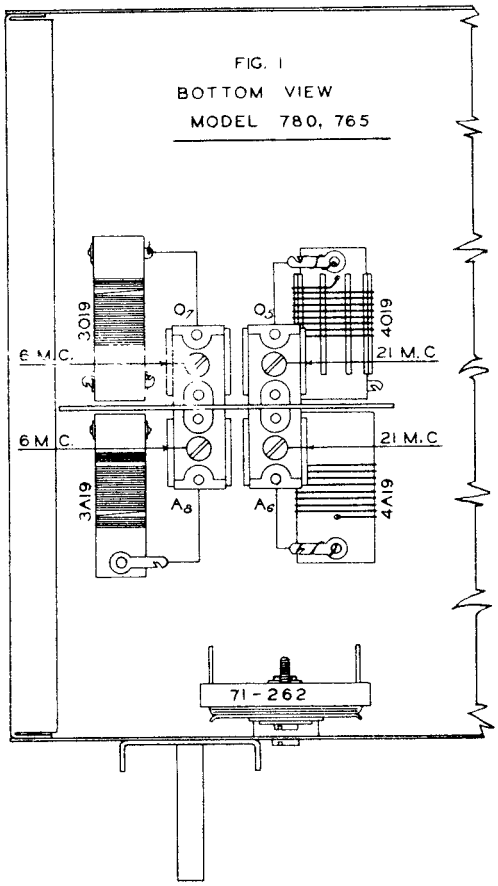

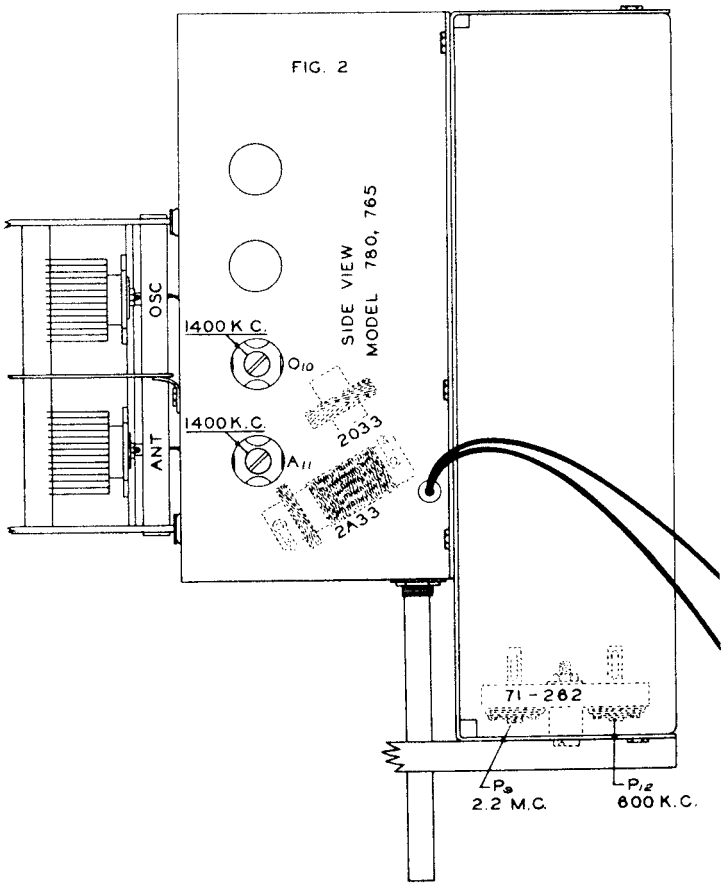

The below layout shows the order of the drive cord for the tuning and Band Spread mechanisms should any servicing or replacement be necessary.

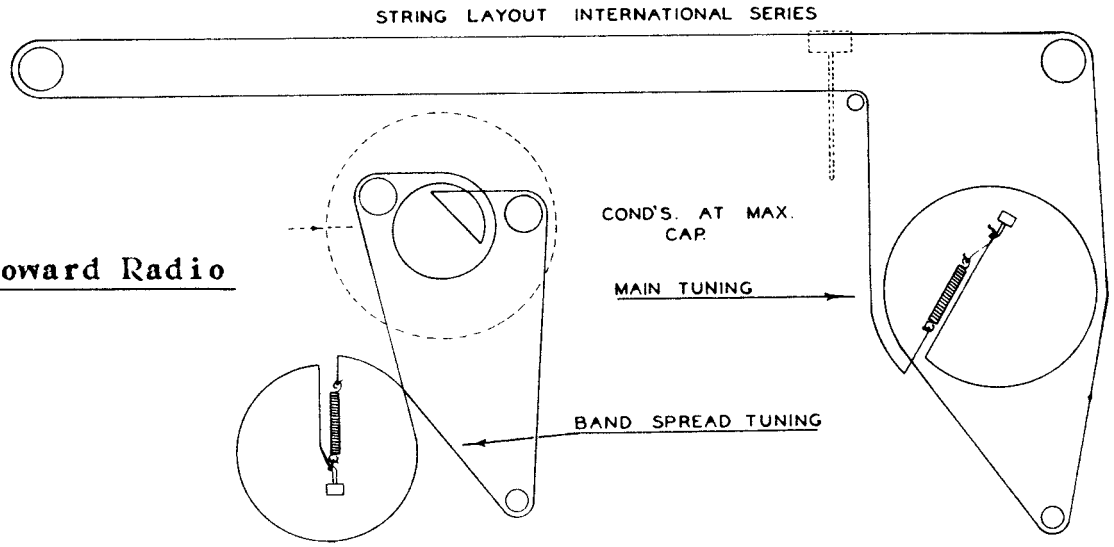

Howard Radio

Trimmer Location for Models 765 and 780

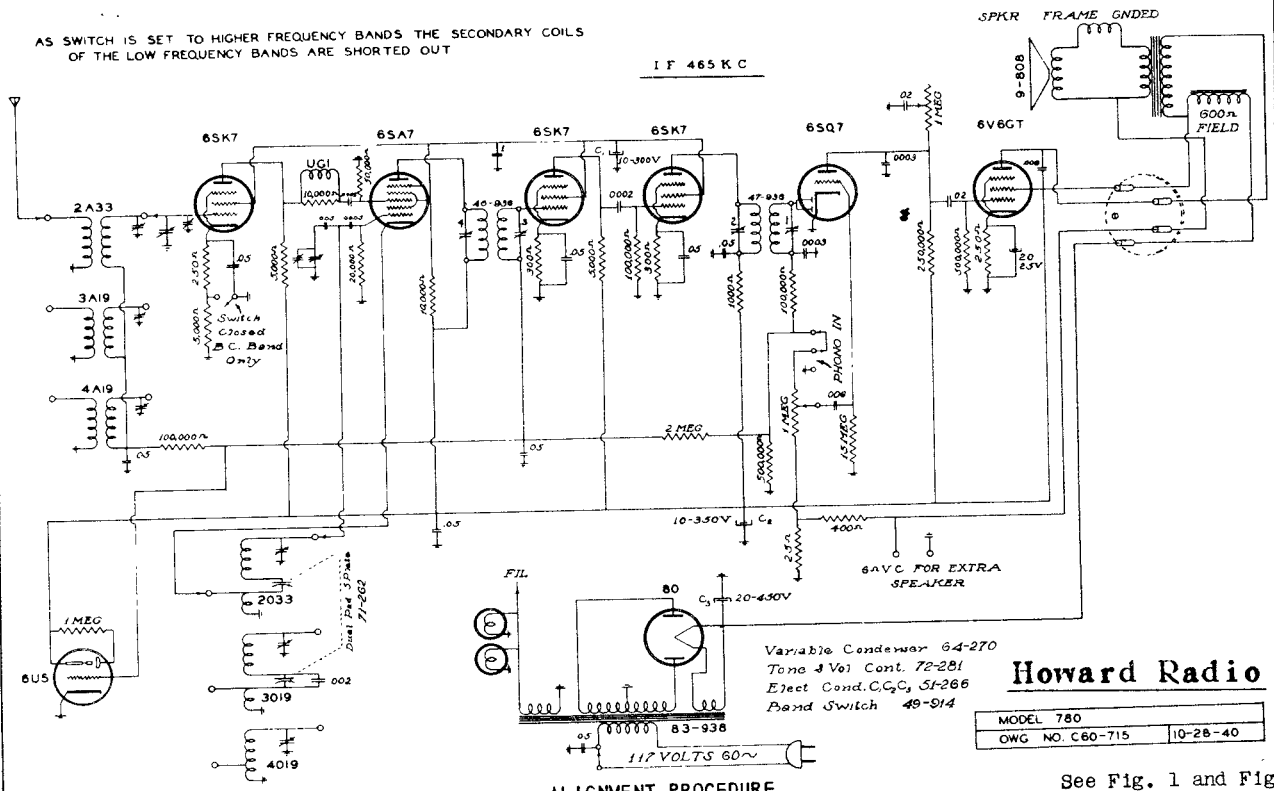

See Fig. 1 and Fig. 2.

ALIGNMENT PROCEDURE

Wave-Band Switch Position	Position of Dial Pointer	Generator Frequency	Generator Connection	See Note	Trimmers Adjusted (In order shown)	Trimmer Function
Broadcast	Max. Cap.	465 KC	Converter Grid	A,D	I_1, I_2, I_3, I_4	IF
7-22 MC	21	21 MC	Ant. (Brown)	B	O_5, A_6	Osc., Ant.
2.2-7 MC	6	6 MC	" "		O_7, A_8	Osc., Ant.
2.2-7 MC	2.2	2.2 MC	" "		P_9	Osc. Pad.
Broadcast	1400	1400 KC	" "		O_{10}, A_{11}	Osc., Ant.
Broadcast	600	600 KC	" "	C	P_{12}	Osc. Pad.

A--Each step of the alignment should be repeated in the original order for greater accuracy. Keep output from Signal Generator low. The I.F. trimmers are reached through the two holes on the top of each I.F. can.

B--When aligning the short wave bands, do not adjust to the IMAGE frequency. For example, if the adjustment is correctly made at 21 MC, then a weaker image will be heard at 21,000 KC less 930 KC, or about 20,070 KC on the dial.

C--When adjusting this pad, move the tuning hand back and forth and adjust padder until the peak of greatest intensity is obtained.

D--See that the tuning hand is set exactly on the last line above 540 when the condenser is at maximum capacity.

TUBE	FUNCTION	CATH-ODE	SCR. GRID	PLATE	OSC. PLATE
6SK7	R.F. BC R.F. SW	8.5 2.5	110 98	260 210	
6SA7	Mixer		110	265	110
6SK7	I.F. Amp.	2	110	230	
6SK7	I.F. Amp.	4	110	250	

TUBE	FUNCTION	CATH-ODE	SCR. GRID	PLATE	OSC. PLATE
6SQ7	Diode-AVC			50	
6V6GT	Output	12.5	265	250	
80	Rect.				
6U5	Tuning Eye	265			

Voltage taken from ground with line voltage at - 120 V.
High voltage reading off rectifier - 325 V.
Drop across speaker field - 58 V.
Voltage taken with 1,000 Ohm per volt meter.
Band Switch in BC position except R.F. Stage measurements.

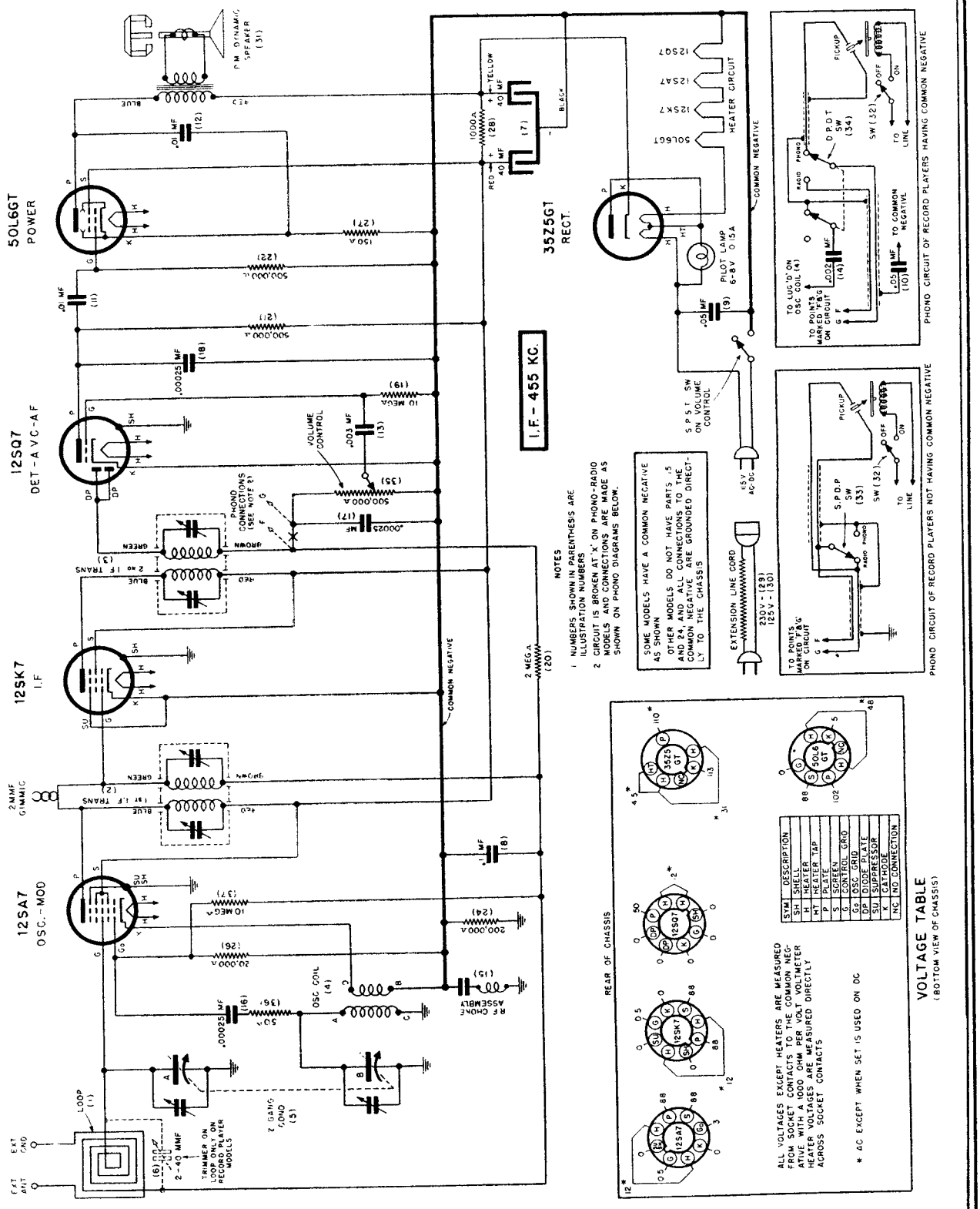

Lafayette Radio Model E-114

COMPILED BY M. N. BEITMAN, SUPREME PUBLICATIONS

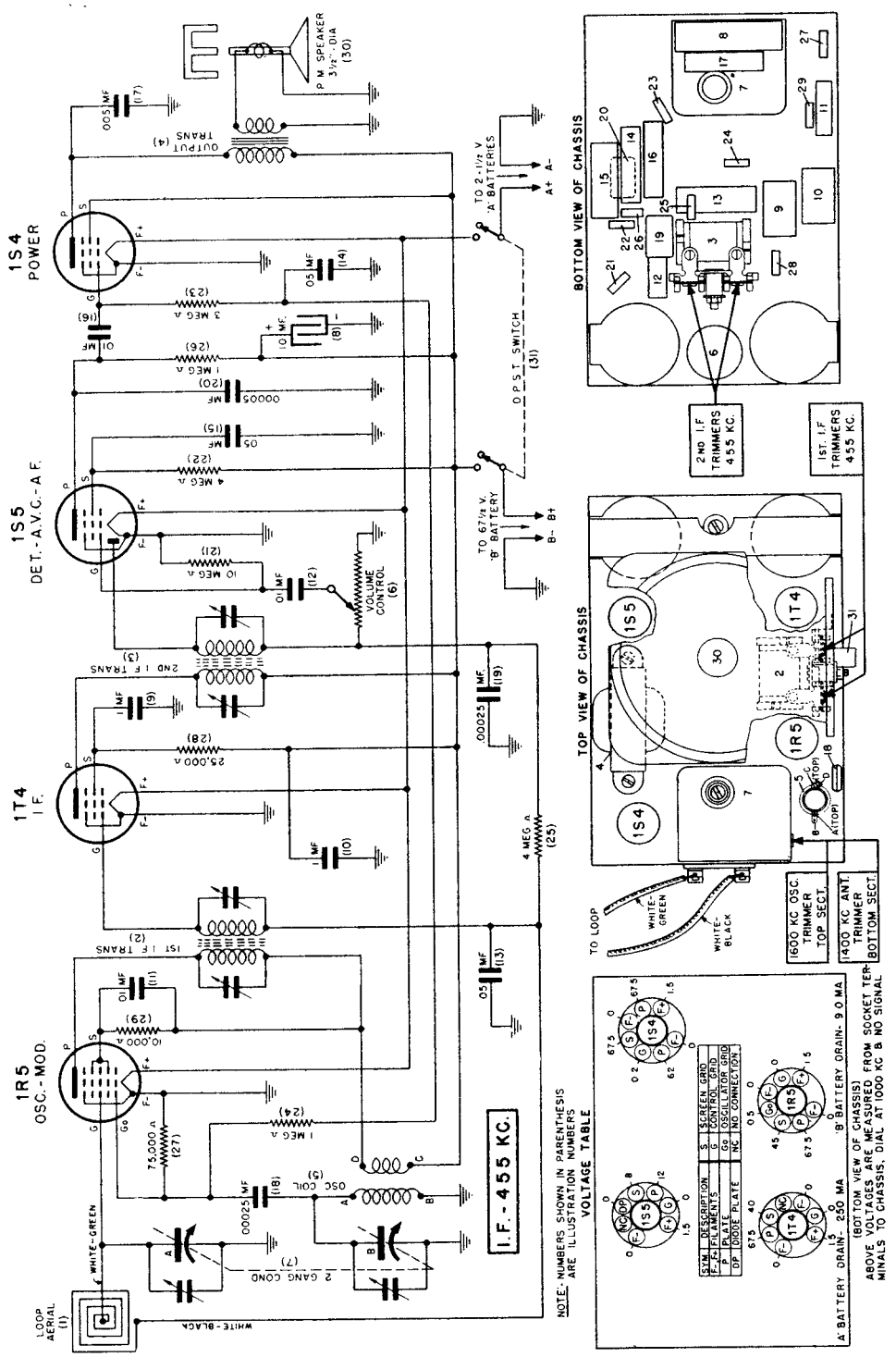

TEST OSCILLATOR				Refer to parts layout diagram for location of trimmers mentioned below:
Set receiver dial to:	Adjust test oscillator frequency to:	Use dummy antenna in series with output of test oscillator consisting of:	Attach output of test oscillator to:	
Any point where no interfering signal is received	Exactly 455 K.C.	0.2 Mfd. condenser	High side to lug on stator of gang condenser to which loop lead is connected.	Adjust each of the second I.F. transformer trimmers for maximum output, then adjust each of the first I.F. transformer trimmers for maximum output.
1 Exactly 1600 K.C.	Exactly 1600 K.C.	None	Use Small Loop to couple test oscillator to receiver loop.	Adjust 1600 K. C. oscillator trimmer for maximum output.
2 Approx. 1400 K.C.	Approx. 1400 K.C.	None	Use Small Loop to couple test oscillator to receiver loop.	While rocking gang condenser adjust 1400 K. C. loop trimmer for maximum output.

BATTERY EQUIPMENT

The receiver is designed to use:

Two—1½ volt "A" batteries, such as Eveready No. 950 or equivalent flashlight size cylindrical battery.

One—67½ volt "B" battery, such as Eveready No. 467 or equivalent.

IMPORTANT: THE BATTERIES USED MUST BE OF THE CORRECT VOLTAGE AND SIZE.

Lafayette Radio

Model E-191.

COMPILED BY M. N. BEITMAN, SUPREME PUBLICATIONS

MANUAL OF 1941 MOST POPULAR SERVICE DIAGRAMS

SCHEMATIC DIAGRAM MODEL TR321-A TR331-A

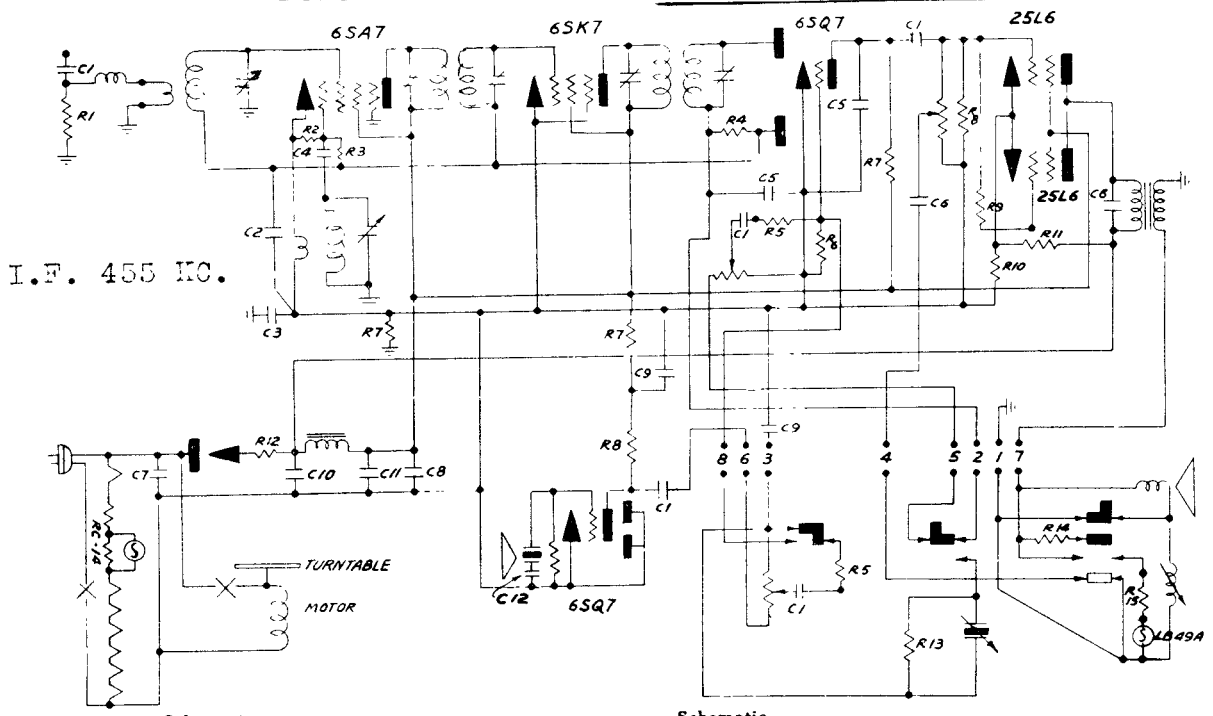

Schematic Location	Part No.	Description
R1	R-15570	2K ohm ¼ Watt Resistor 20%
R2	R-15510	20K ohm ¼ Watt Resistor 20%
R3	R-79	15 Megohm ¼ Watt Resistor 20%
R4	R-15500	2 Megohm ¼ Watt Resistor 20%
R5	R-15504	150K ohm ¼ Watt Resistor 20%
R6	R-149	4.7 Megohm ¼ Watt Resistor 20%
R7	R-153	270K ohm ¼ Watt Resistor 20%
R8	R-154	470K ohm ¼ Watt Resistor 20%

Schematic Location	Part No.	Description
R9	R-15601	100 ohm ¼ Watt Resistor 20%
R10	R-155	68 ohm 1 Watt Resistor 20%
R11	R-147	4K ohm 3 Watt Resistor 20%
R12	R-85	35 ohm 1 Watt Resistor 20%
R13	R-100	300K ohm ¼ Watt Resistor 20%
R14	R-152	4 ohm 1 Watt Resistor 20%
R15	R-151	7.5 ohm 1 Watt Resistor 20%
RC-14	RC-14	Candohm
C1	C-15754	.01 mfd. 400 Volt Condenser
C2	C-15752	.05 mfd. 200 Volt Condenser
C3	C-15770	.2 mfd. 200 Volt Condenser
C4	CM-29	50 mmfd Mica Condenser
C5	CM-30	250 mmfd. Mica Condenser
C6	C-25	.006 mfd. 400 Volt Condenser
C7	C-15756	.05 mfd. 400 Volt Condenser
C8	C-15751	.25 mfd. 200 Volt Condenser
C9,C12	C-15761	.10 mfd. 200 Volt Condenser
C10	CE-66-2	100 mfd Electrolytic
C11	CE-66-2	40 mfd. Electrolytic

Model TR321-A operates on 105-125 volts 60 cycles AC only.

Model TR331-A operates on 105-125 volts 50 cycles AC only.

Majestic Radio & Television Corporation

2600 West 50th Street Chicago, Illinois, U. S. A.

TUBE LAYOUT MODEL 403

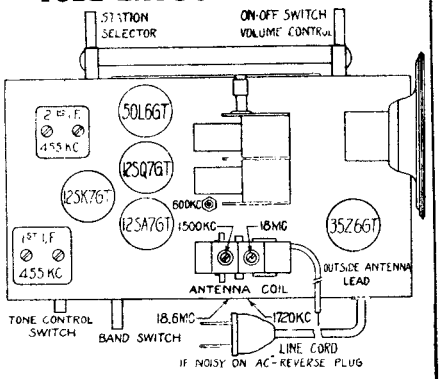

SCHEMATIC DIAGRAM MODEL 403

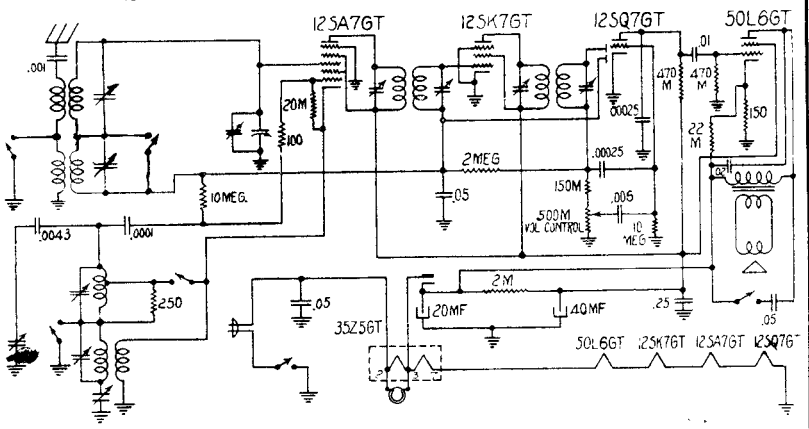

 I.F. 455 KC.

COMPILED BY M. N. BEITMAN, SUPREME PUBLICATIONS

SCHEMATIC DIAGRAM MODEL TP221-A TP231-A

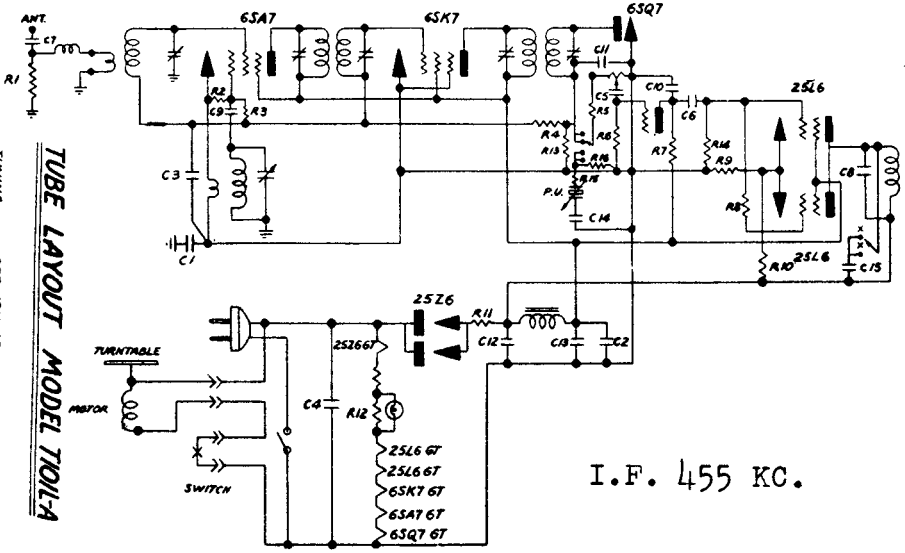

I.F. 455 KC.

Schematic Location	Part No.	Description
R1	R-15510	20K ohm ¼ Watt Resistor 20%
R2,R5	R-63	10 Megohm ¼ Watt Resistor 20%
R3	R-15500	2 Megohm ¼ Watt Resistor 20%
R4	R-15504	150K ohm ¼ Watt Resistor 20%
R6,R7	R-15520	500K ohm ¼ Watt Resistor 20%
R8	R-59	110 ohm ⅓ Watt Resistor 10%
R9	R-138	1000 ohm 1 Watt Resistor 20%
R10	R-150	15 ohm 1 Watt Resistor 20%
R11	R-85	35 ohm 1 Watt Resistor 20%
R12	R-145	9K ohm 2 Watt Resistor 10%
R13	R-15512	250K ohm ¼ Watt Resistor 20%
C1	C-15754	.01 mfd. 400 Volt Condenser
C2	CM-29	50 mmfd. Mica Condenser
C3	C-15752	.05 mfd. 200 Volt Condenser
C4	C-15770	.2 mfd. 200 Volt Condenser
C5	C-15756	.05 mfd. 400 Volt Condenser
C6	CM-30	250 mmfd. Mica Condenser
C7	CM-37	500 mmfd. Mica Condenser
C8	C-15774	.002 mfd. 400 Volt Condenser
C9	C-47	.004 mfd. 400 Volt Condenser
C10	C-25	.006 mfd. 400 Volt Condenser
C11,C12	Y-CE-66-1	40 mfd. & 75 mfd. Electr. Cond.

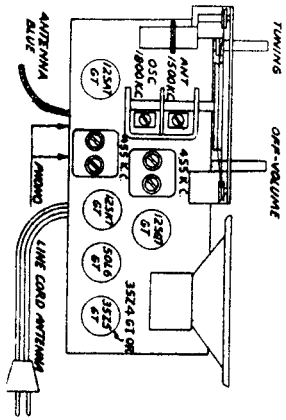

TUBE LAYOUT MODEL T101-A

Majestic

SCHEMATIC DIAGRAM MODEL T101L-A

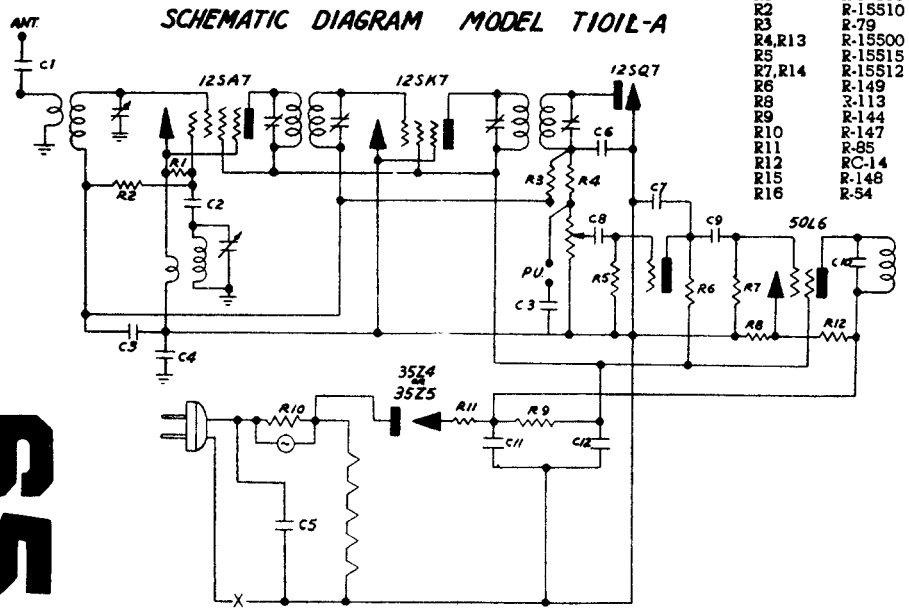

Schematic Location	Part No.	Description
R1	R-15570	2000 ohm ¼ Watt Resistor
R2	R-15510	20K ohm ¼ Watt Resistor
R3	R-79	15 Megohm ¼ Watt Resistor
R4,R13	R-15500	2 Megohm ¼ Watt Resistor
R5	R-15515	100K ohm ¼ Watt Resistor
R7,R14	R-15512	250K ohm ¼ Watt Resistor
R6	R-149	4.7 Megohm ¼ Watt Resistor
R8	R-113	100 ohm ¼ Watt Resistor
R9	R-144	70 ohm ¼ Watt Resistor
R10	R-147	4K ohm 3 Watt Resistor
R11	R-85	35 ohm 1 Watt Resistor
R12	RC-14	Candohm
R15	R-148	300K ohm ¼ Watt Resistor
R16	R-54	50K ohm ¼ Watt Resistor

Schematic Location	Part No.	Description
C1	C-15770	.20 mfd. 200 Volt Condenser
C2	C-15751	.25 mfd. 200 Volt Condenser
C3,C14	C-15752	.05 mfd. 200 Volt Condenser
C4,C15	C-15766	.05 mfd. 400 Volt Condenser
C5,C6,C7	C-15754	.01 mfd. 400 Volt Condenser
C8	C-25	.006 mfd. 400 Volt Condenser
C9	CM-29	50 mmfd. Mica Condenser
C10,C11	CM-30	250 mmfd. Mica Condenser
C12	CE-66	75 mfd 150 Volt E ectrolytic
C13	CE-66	40 mfd. 150 Volt Electrolytic

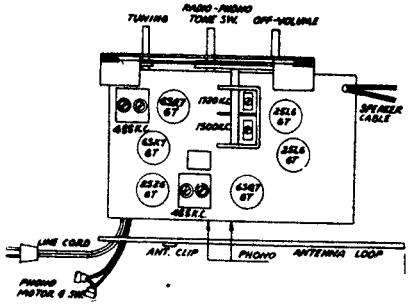

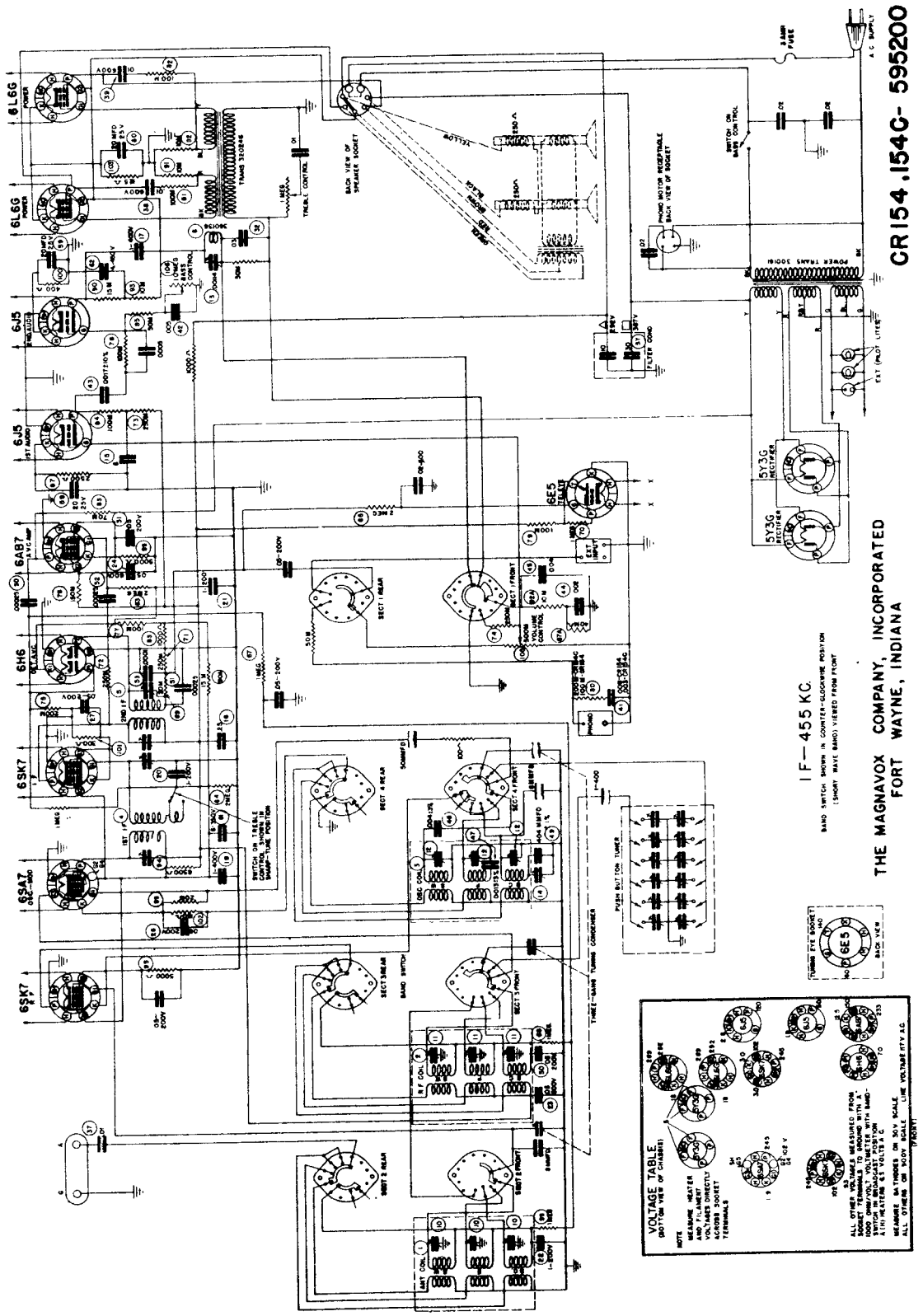
CR154,154C- 595200
THE MAGNAVOX COMPANY, INCORPORATED
FORT WAYNE, INDIANA
IF—455 KC.
VOLTAGE TABLE
6L6G
6L6G
6J5
6J5
6AB7
6H6
6SK7
6SA7
6SK7
6E5
5Y3G
5Y3G

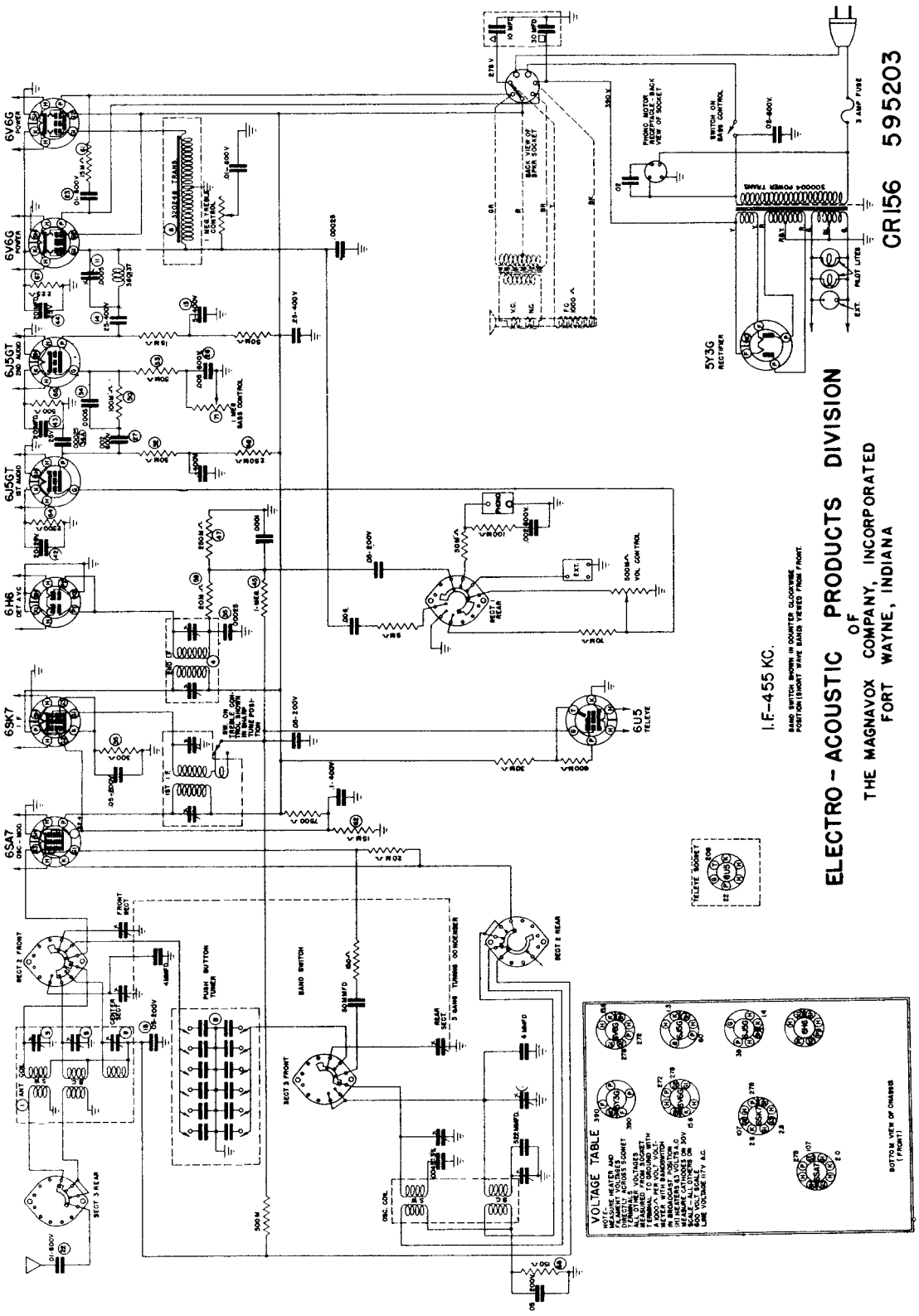
CR156 595203
ELECTRO-ACOUSTIC PRODUCTS DIVISION
OF
THE MAGNAVOX COMPANY, INCORPORATED
FORT WAYNE, INDIANA
I.F.-455 KC.
VOLTAGE TABLE
6V6G POWER
6V6G POWER
6J5GT 2ND AUDIO
6J5GT 1ST AUDIO
6H6 DET AVC
6SK7 I-F
6SA7 OSC-MIX
5Y3G RECTIFIER
6U5 TELETE
PUSH BUTTON TUNER
BAND SWITCH
TELETE SOCKET
BOTTOM VIEW OF CHASSIS (FRONT)

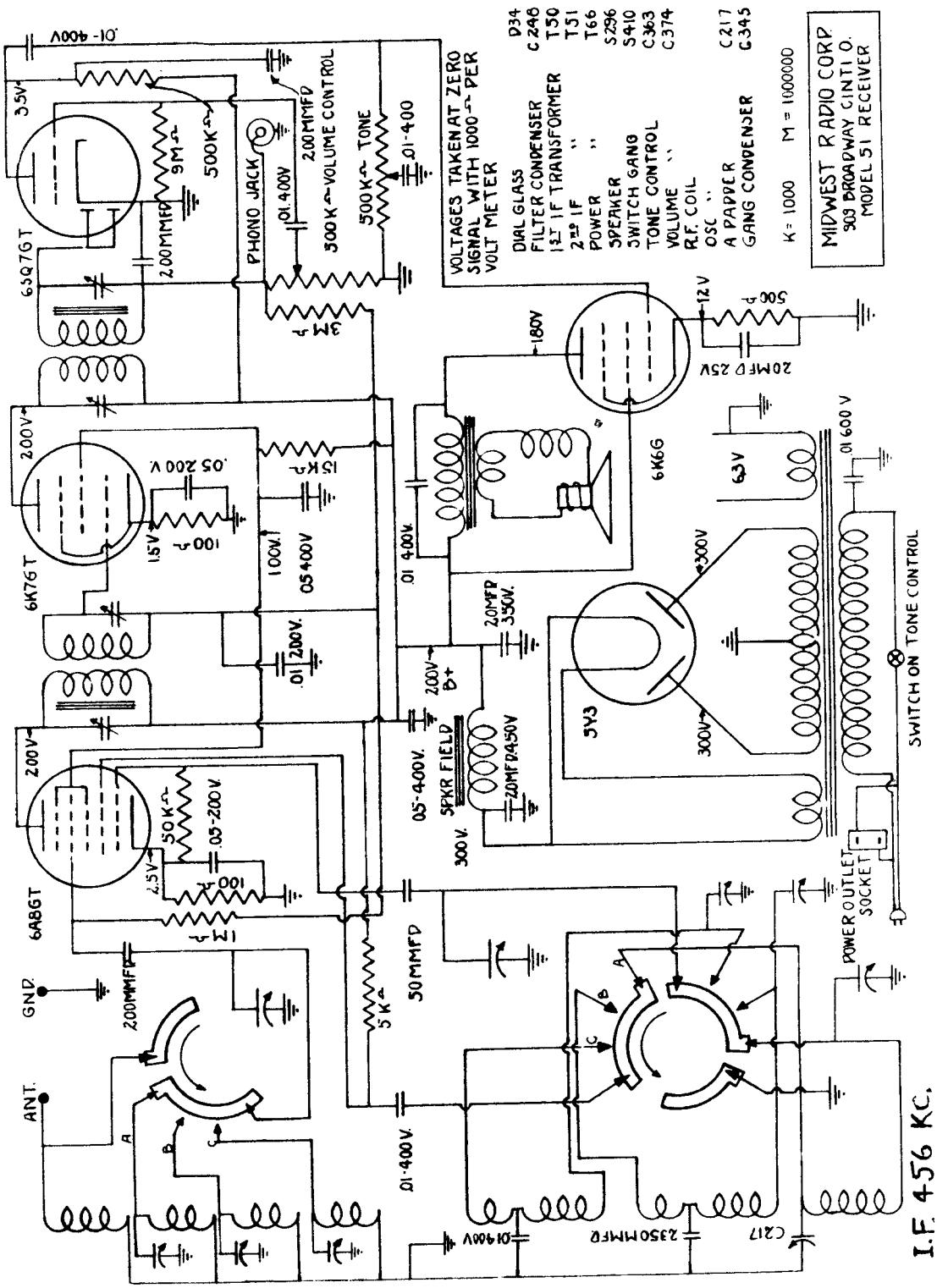
MIDWEST RADIO CORP
903 BROADWAY CINTI O.
MODEL 51 RECEIVER
K = 1000 M = 1000000
VOLTAGES TAKEN AT ZERO SIGNAL WITH 1000 Ω PER VOLT METER
DIAL GLASS D34
FILTER CONDENSER C246
1ST IF TRANSFORMER T50
2ND IF " T51
POWER " T66
SPEAKER S296
SWITCH GANG S410
TONE CONTROL C363
VOLUME " C374
R.F. COIL
OSC. "
A PADDER C217
GANG CONDENSER C345
PHONO JACK
500K Ω VOLUME CONTROL
500K Ω TONE
6SQ7GT
6K7GT
6A8GT
6K6G
5Y3
SPKR FIELD
SWITCH ON TONE CONTROL
POWER OUTLET SOCKET
ANT.
GND.
I.F. 456 KC.

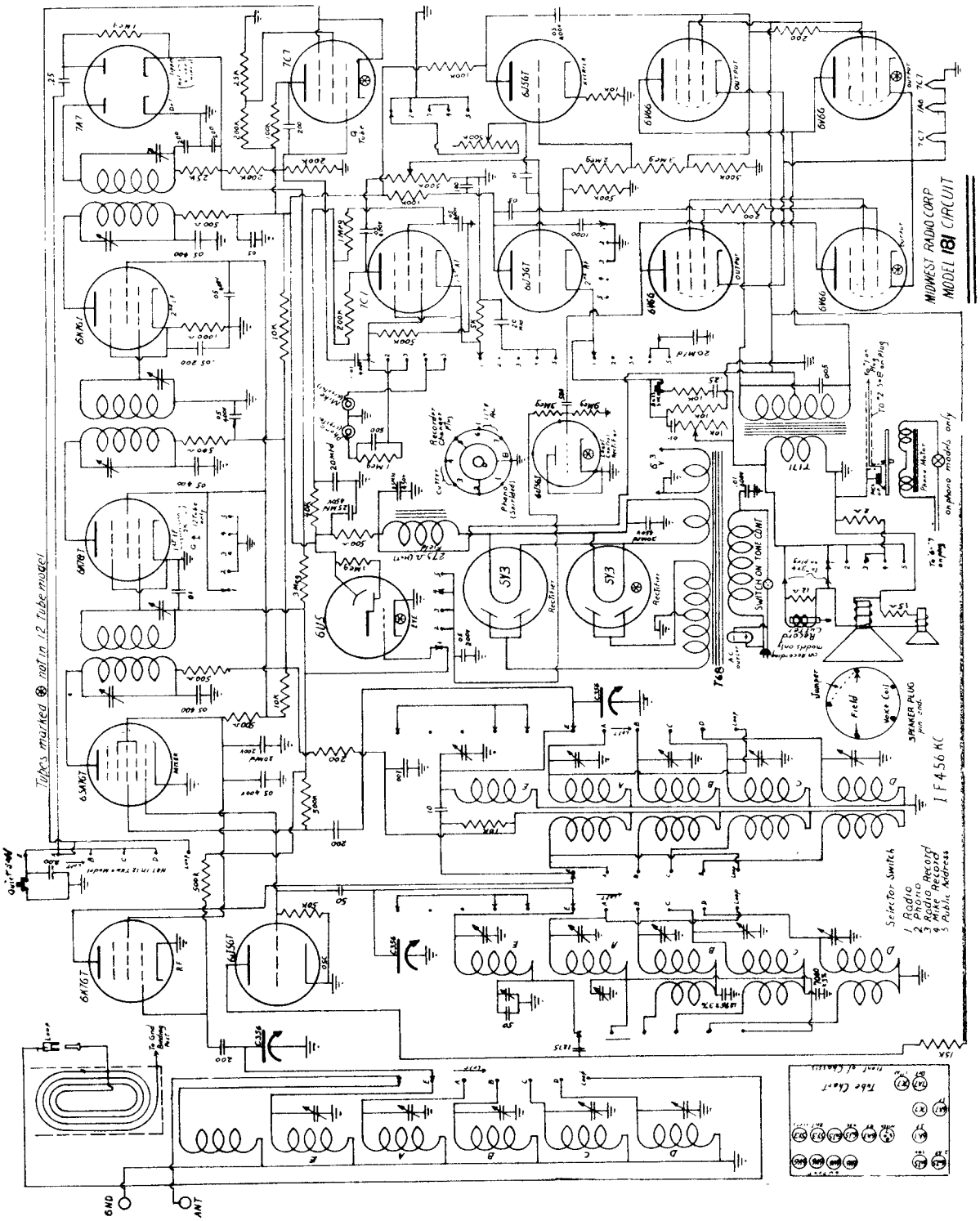
MIDWEST RADIO CORP
MODEL 181 CIRCUIT
Tubes marked ⊗ not in 12 tube model
7A7
7C7
6J5GT
6V6G
6K7GT
6K8GT
6U5
5Y3
Rectifier
SWITCH ON TONE CONT
SPEAKER PLUG
I F 456 KC
Selector Switch
1 Radio
2 Phono
3 Radio Record
4 Mike Record
5 Public Address
6K7GT
6J5GT
GND
ANT

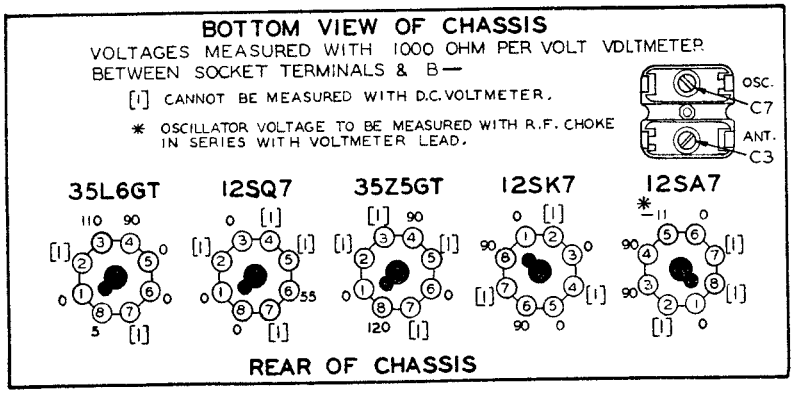

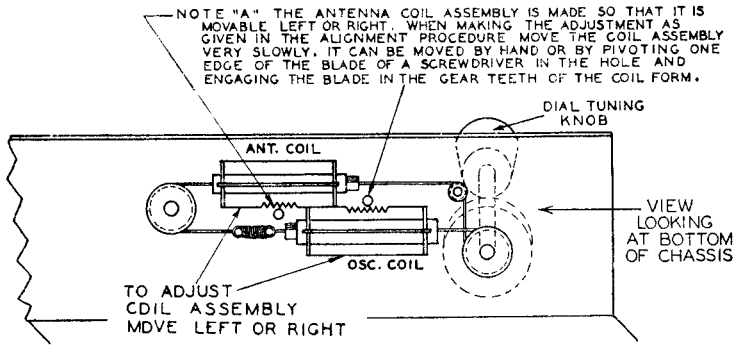

COIL ASSEMBLY VIEW

Schematic Ref. No.	Part No.	Description
		RESISTORS
R1	BE130176	20M ohm—⅓ w.
R2	BE130100	150M ohm—⅓ w.
R3	BE130279	1M ohm—1 watt
R4	BE1304	3 megohm—⅓ w.
R5	BE130288	50 ohm—1.5 watt
R6	BE101220	500M ohm volume control and Switch
R7	BE130240	30 ohm—⅓ w.
R8	BE130257	5 megohm—⅓ w.
R9	BE130100	150M ohm—⅓ w.
R10	BE13011	250M ohm—⅓ w.
R11	BE130166	150 ohm—⅓ w.
		CONDENSERS
C1	BE131262	.00001 washer condenser (antenna clip on back plate
C2	BE129114	.0003 mica
C3	BE124137	Trimmer on antenna coil
C4	BE1009	.05 x 200 v.
C5	BE12939	.00005 mica
C6	BE10091	.15 x 400 v.
C7	BE124137	Trimmer on Oscillator coil
C8	BE11992	20 mfd. lytic x 150 w. v.
C9	BE11992	40 mfd. lytic x 150 w. v.
C10	BE10013	.05 x 400 v.
C11	BE12912	.00025 mica
C12	BE10025	.002 x 600 v.
C13	BE1292	.0005 mica
C14	BE10011	.01 x 400 v.
C15	BE10011	.01 x 400 v.
		C3 and C7 in same unit
		C8 and C9 in same unit
		PARTS
T1	BE115597-18	Antenna plate—walnut or
	BE115597-9	Antenna plate—ivory
T2	BE111181	Antenna permeability coil
T3	BE110153	Oscillator permeability coil
T4	BE108157-H	Input I.F. Coil—455 kc.
T5	BE108157-I	Output I.F. Coil—455 kc.
T6	BE105110	Output Transformer

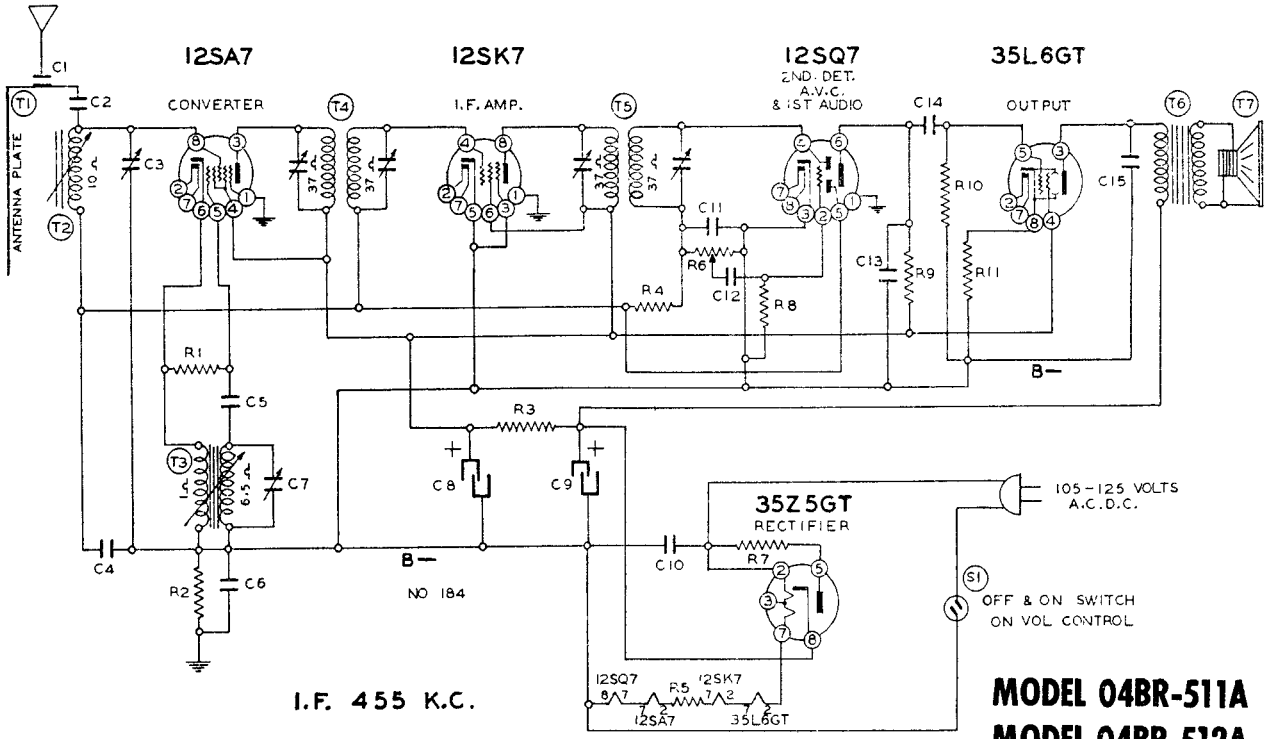

MODEL 04BR-511A
MODEL 04BR-512A

MONTGOMERY WARD

MANUAL OF 1941 MOST POPULAR SERVICE DIAGRAMS

Model No. 04BR-513A and 04BR-514A

MONTGOMERY WARD
CHICAGO, U. S. A.

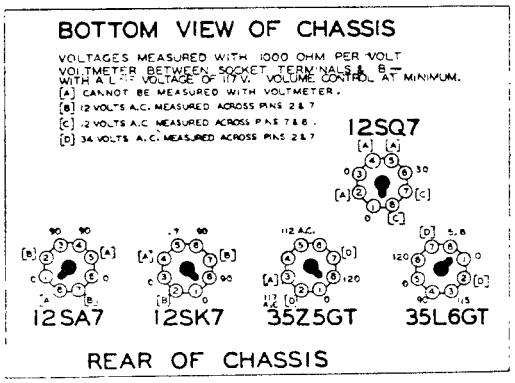

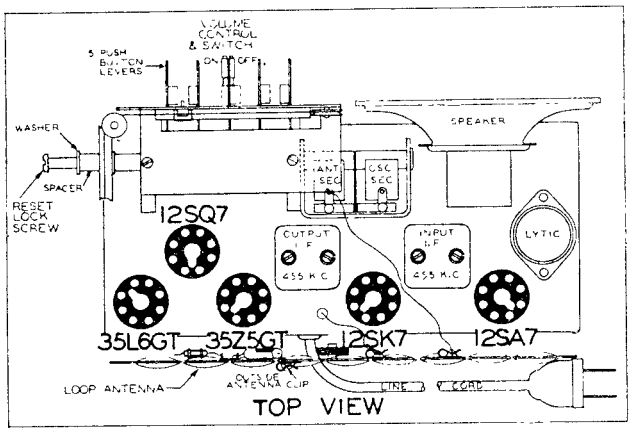

Schematic Diagram Ref. No.	Part No.	Description

RESISTORS

R1	BE130314	2200 ohm—⅓ w.
R2	BE13094	50M ohm—⅓ w.
R3	BE1309	200M ohm—⅓ w.
R4	BE130315	75 ohm—1½ w.
R5	BE130203	40 ohm—⅓ w.
R6	BE1304	3 megohm—⅓ w.
R7	BE1301	25M ohm—⅓ w.
R8	BE130215	25 ohm—⅓ w.
R9	BE101198	1 megohm volume control
R10	BE130257	5 megohm—⅓ w.
R11	BE1303	500M ohm—⅓ w.
R12	BE1303	500M ohm—⅓ w.
R13	BE130166	150 ohm—⅓ w.
R14	BE130287	1200 ohm—1 w.

CONDENSERS

C	BE102132	2 gang variable condenser
C1	BE10011	.01 x 400 v.
C2	BE10091	.15 x 400 v.
C3		Oscillator trimmer on gang
C4		Antenna trimmer on gang
C5	BE12921	.0002 mfd. mica
C6	BE1009	.05 x 200 v.
C7	BE1001	.1 x 400 v.
C8	BE1009	.05 x 200 v.
C9	BE1295	.0001 mfd. mica
C10	BE10025	.002 x 600 v.
C11	BE12912	.00025 mfd. mica
C12	BE100106	.004 x 600 v.
C13	BE11992	20 mfd. lytic x 150 w. v.
C14	BE11992	40 mfd. lytic x 150 w. v.
C15	BE10026	.02 x 400 v.

C13 and C14 are in same unit

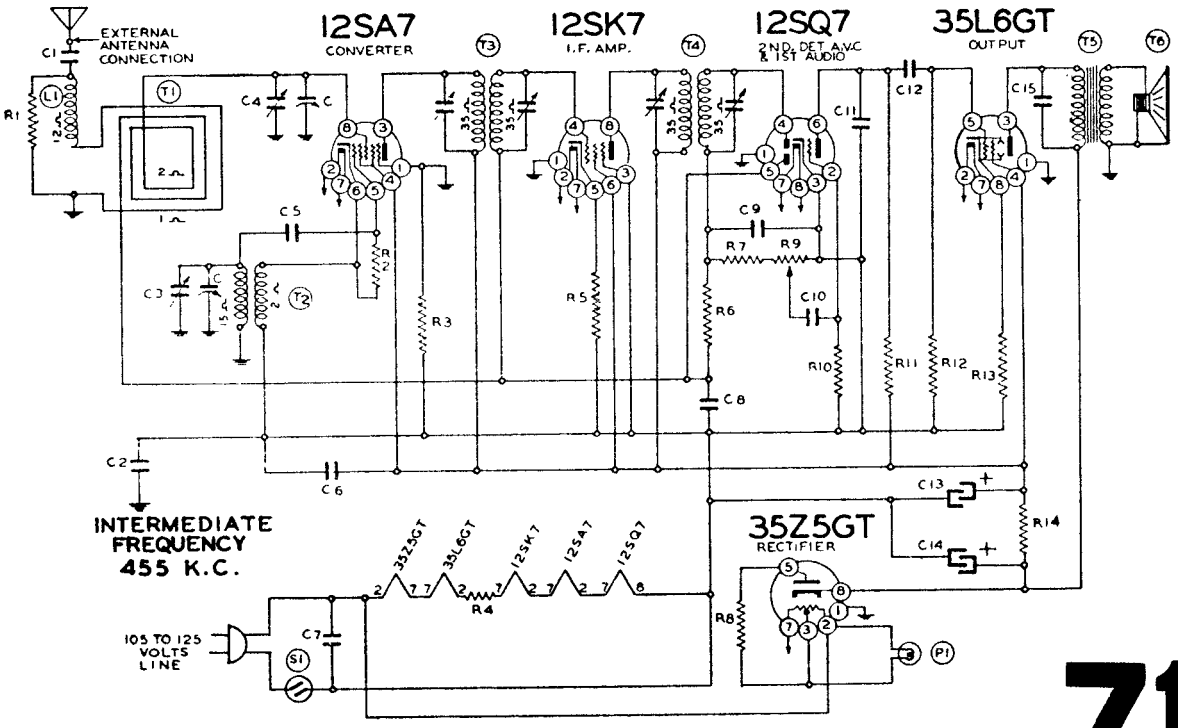

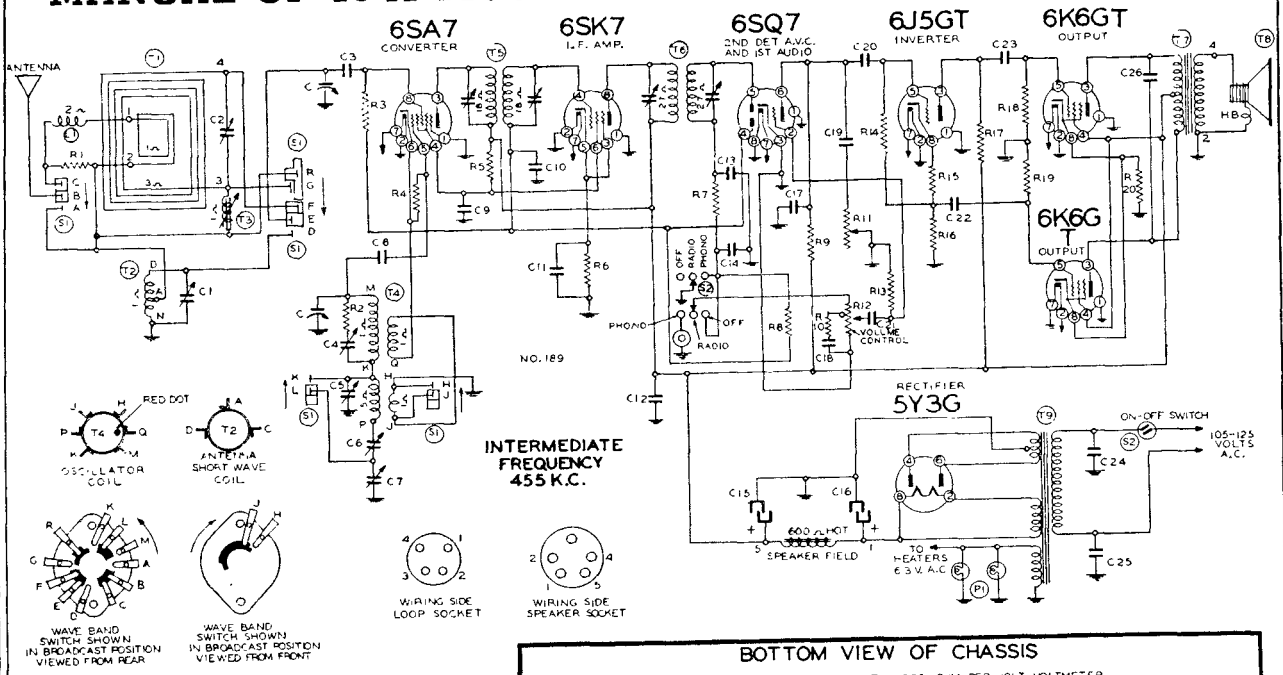

RESISTORS

R1	BE13064	3500 ohm—⅓ w.
R2	BE130276	10 ohm—⅓ w.
R3	BE1304	3 megohm—⅓ w.
R4	BE130236	30M ohm—⅓ w.
R5	BE130307	15M ohm—1 w.
R6	BE13083	300 ohm—⅓ w.
R7	BE13012	50M ohm—⅓ w.
R8	BE13038	2 megohm—⅓ w.
R9	BE13011	250M ohm—⅓ w.
R10	BE130149	15M ohm—⅓ w.
R11	BE101223	Tone Control—1 megohm
R12	BE101224	Volume control—½ megohm
R13	BE130257	5 megohm—⅓ w.
R14	BE1303	500M ohm—⅓ w.
R15	BE130218	5M ohm—⅓ w.
R16	BE130103	100M ohm—⅓ w.
R17	BE130103	100M ohm—⅓ w.
R18	BE1303	500M ohm—⅓ w.
R19	BE1303	500M ohm—⅓ w.
R20	BE130320	320 ohm—1 w.

CONDENSERS

C	BE102133	2 gang variable condenser
C1	BE124116	Short wave antenna trimmer
C2	BE124141	B.C. Antenna Trimmer
C3	BE1292	.0005 mica
C4	BE124142	Dual Adj. Trimmer—S.W. Osc. Trimmer
C5	BE124142	Dual Adj. Trim.—B.C. Osc. Trimmer
C6	BE124140	Dual Adj. Cond.—B.C. Pad
C7	BE124140	Dual Adj. Cond.—S.W. Pad
C8	BE12960	.00015 mica
C9	BE10013	.05 x 400 v.
C10	BE1009	.05 x 200 v.
C11	BE1009	.05 x 200 v.
C12	BE1001	.1 x 400 v.
C13	BE129161	Dual—.0001 Mica
C14	BE129161	Dual—.0001 Mica
C15	BE119108	16 mfd. x 450 w.v. lytic cond.
C16	BE119108	16 mfd. x 450 w.v. lytic cond.
C17	BE1295	.0001 mica
C18	BE100120	.035 x 200 v.
C19	BE10019	.006 x 600 v.
C20	BE10026	.02 x 400 v.
C21	BE10019	.006 x 600 v.
C22	BE10013	.05 x 400 v.
C23	BE10013	.05 x 400 v.
C24	BE10061	.02 x 600 v.
C25	BE10061	.02 x 600 v.
C26	BE10019	.006 x 600 v.

C4 and C5, C6 and C7, and C13 and C14 are in same unit.

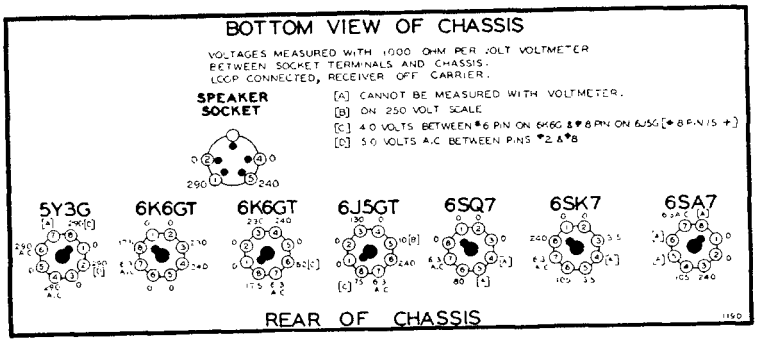

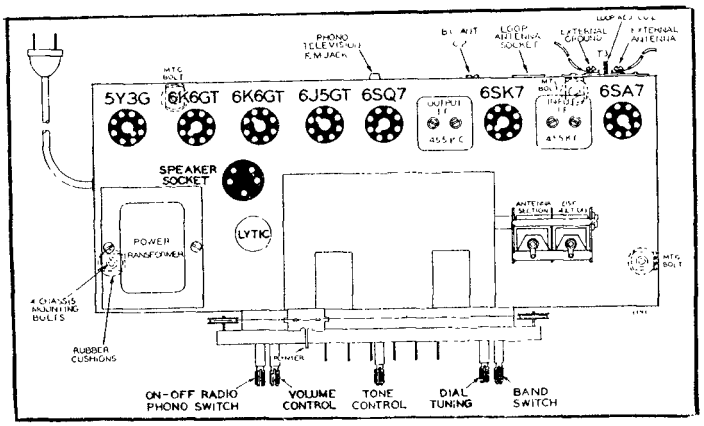

MODEL 04BR-729A

MODEL 04BR-730A

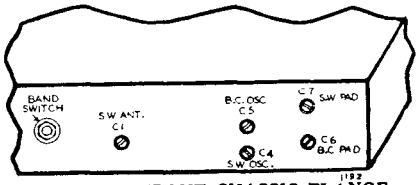

TRIMMER VIEW FRONT CHASSIS FLANGE

COMPILED BY M. N. BEITMAN, SUPREME PUBLICATIONS

MANUAL OF 1941 MOST POPULAR SERVICE DIAGRAMS

COMPILED BY M. N. BEITMAN, SUPREME PUBLICATIONS

R1	BE130232	25M ohm—⅓ w.
R2	BE130232	25M ohm—⅓ w.
R3	BE13019	1 megohm—⅓ w.
R4	BE130239	250 ohm—⅓ w.
R5	BE130218	5M ohm—⅓ w.
R6	BE13019	1 megohm—⅓ w.
R7	BE130232	25M ohm—⅓ w.
R8	BE130318	6M ohm—2 watt
R9	BE130319	10M ohm—2 watt
R10		1 megohm in tun
R11	BE13013	1100 ohm—⅓ w.
R12	BE13082	10M ohm—⅓ w.
R13	BE130235	1500 ohm—⅓ w.
R14	BE130192	2M ohm—⅓ w.
R15	BE130192	2M ohm—⅓ w.
R16	BE13019	1 megohm—⅓ w.
R17	BE1303	500M ohm—⅓ w.
R18	BE1303	500M ohm—⅓ w.
R19	BE130317	250 ohm—2 watt
R20	BE1303	500M ohm—⅓ w.
R21	BE13094	50M ohm—⅓ w.
R22	BE130316	120M ohm—⅓ w.
R23	BE101229	500M ohm volume
R24	BE1303	500M ohm—⅓ w.
R25	BE13094	50M ohm—⅓ w.
R26	BE130218	5M ohm—⅓ w.
R27	BE13094	50M ohm—⅓ w.
R28	BE130257	5 megohm—⅓ w.
R29	BE130172	250M ohm—⅓ w.
R30	BE1303	500M ohm—⅓ w.
R31	BE130172	250M ohm—⅓ w.
R32	BE130232	25M ohm—⅓ w.
R33	BE13080	150M ohm—⅓ w.
R34	BE130309	350M ohm—⅓ w.
R35	BE130172	250M ohm—⅓ w.
R36	BE13066	75M ohm—⅓ w.
R37	BE13080	150M ohm—⅓ w.
R38	BE130146	2 megohm—⅓ w.

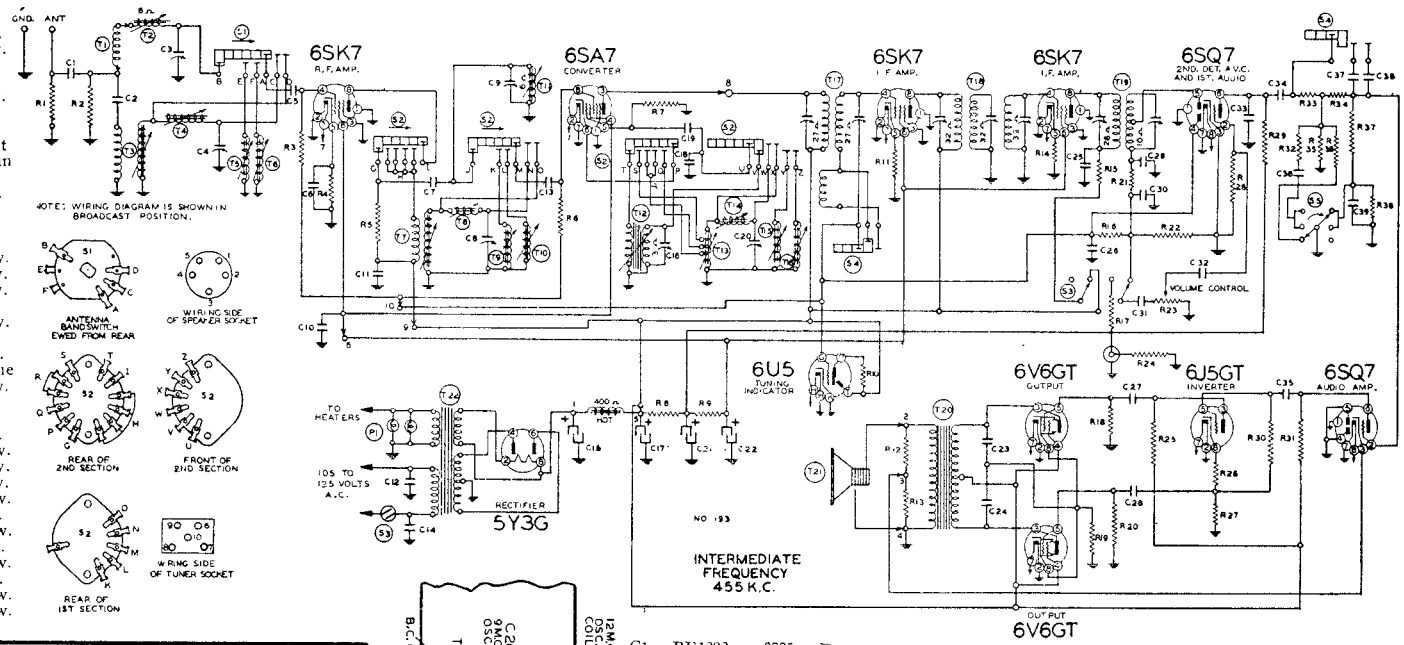

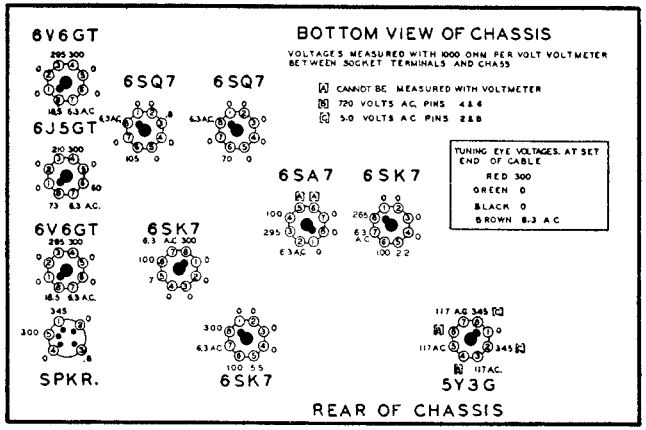

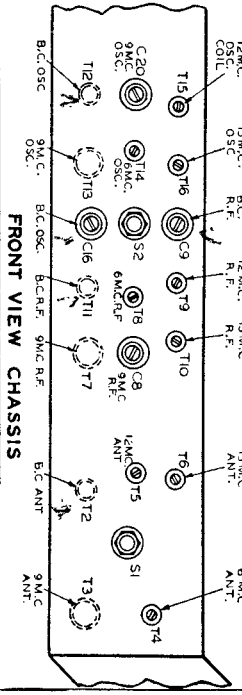

C1	BE1292	.0005 mica
C2	BE10047	.002 x 600 v.
C3	BE124143	B.C. Antenna Trimmer
C4	BE124143	9 mc. Antenna Trimmer
C5	BE1292	.0005 mica
C6	BE10020	.1 x 200 v. tubular
C7	BE129168	.00001 mica
C8	BE124138	9 mc. R.F. Trimmer
C9	BE124139	B.C. R.F. Trimmer
C10	BE10074	.1 x 400 v.
C11	BE10074	.1 x 400 v.
C12	BE10061	.02 x 600 v.
C13	BE1292	.0005 mica
C14	BE10061	.02 x 600 v.
C15	BE119112	30.0 mfd. lytic
C16	BE124144	B.C. Oscillator Trimmer
C17	BE119112	30.0 mfd. lytic x 450 w.v.
C18	BE129167	.0002 silver mica
C19	BE129165	.00005 mica
C20	BE124145	9 mc. oscillator trimmer
C21	BE119112	10.0 mfd. lytic
C22	BE11969	16 mfd. x 350 w v.
C23	BE10065	.015 x 600 v.
C24	BE10065	.015 x 600 v.
C25	BE1001	.1 x 400 v.
C26	BE10020	.1 x 200 v.
C27	BE10013	.05 x 400 v.
C28	BE1009	.05 x 200 v.
C29	BE1295	.0001 mica
C30	BE1295	.0001 mica
C31	BE10020	.1 x 200 v.
C32	BE10019	.006 x 600 v.
C33	BE12912	.00025 mica
C34	BE1001	.1 x 400 v.
C35	BE10013	.05 x 400 v.
C36	BE100118	.008 x 600 v.
C37	BE12938	.00005 mica
C38	BE129166	.000125 mica
C39	BE10037	.003 x 600 v.

C3, C4 in same unit
C15, C17 and C21 are in same unit

PARTS

T1	BE111200	Loop Antenna Assembly
T2	BE111195	B.C. Antenna Coil
T3	BE111190	9 mc. Antenna Coil
T4	BE111189	6 mc. Antenna Coil
T5	BE111191	12 mc. Antenna Coil
T6	BE111192	15 mc. Antenna Coil
T7	BE10959	9 mc. R.F. Coil
T8	BE10958	6 mc. R.F. Coil
T9	BE10960	12 mc. R.F. Coil
T10	BE10961	15 mc. R.F. Coil
T11	BE10962	B.C. R.F. Coil
T12	BE110161	B.C. Oscillator Coil
T13	BE110157	9 mc. Oscillator Coil
T14	BE110156	6 mc. Oscillator Coil
T15	BE110158	12 mc. Oscillator Coil
T16	BE110159	15 mc. Oscillator Coil
T17	BE108181	Input I.F. Coil—455 kc.
T18	BE108155B	Interstage I.F. Coil
T19	BE108182	Output I.F. Coil—455 kc.
T20	BE105115	Output Transformer
T21	BE114207	12 in. Dynamic Speaker
T22	BE104217	Power Transformer—50-60 cycles
	BE104218	Power Transformer—25 cycle
S1	BE125121	Antenna Bandswitch
S2	BE125122	R.F. Oscillator Bandswitch
S3	BE125125	On-off Radio Phono Switch
S4	BE125124	Treble Switch
S5	BE125123	Bass Switch
P1	BE10794	2 6-8 volts pilot light T44

MODEL 04BR-1105A

73 WARDS AIRLINE

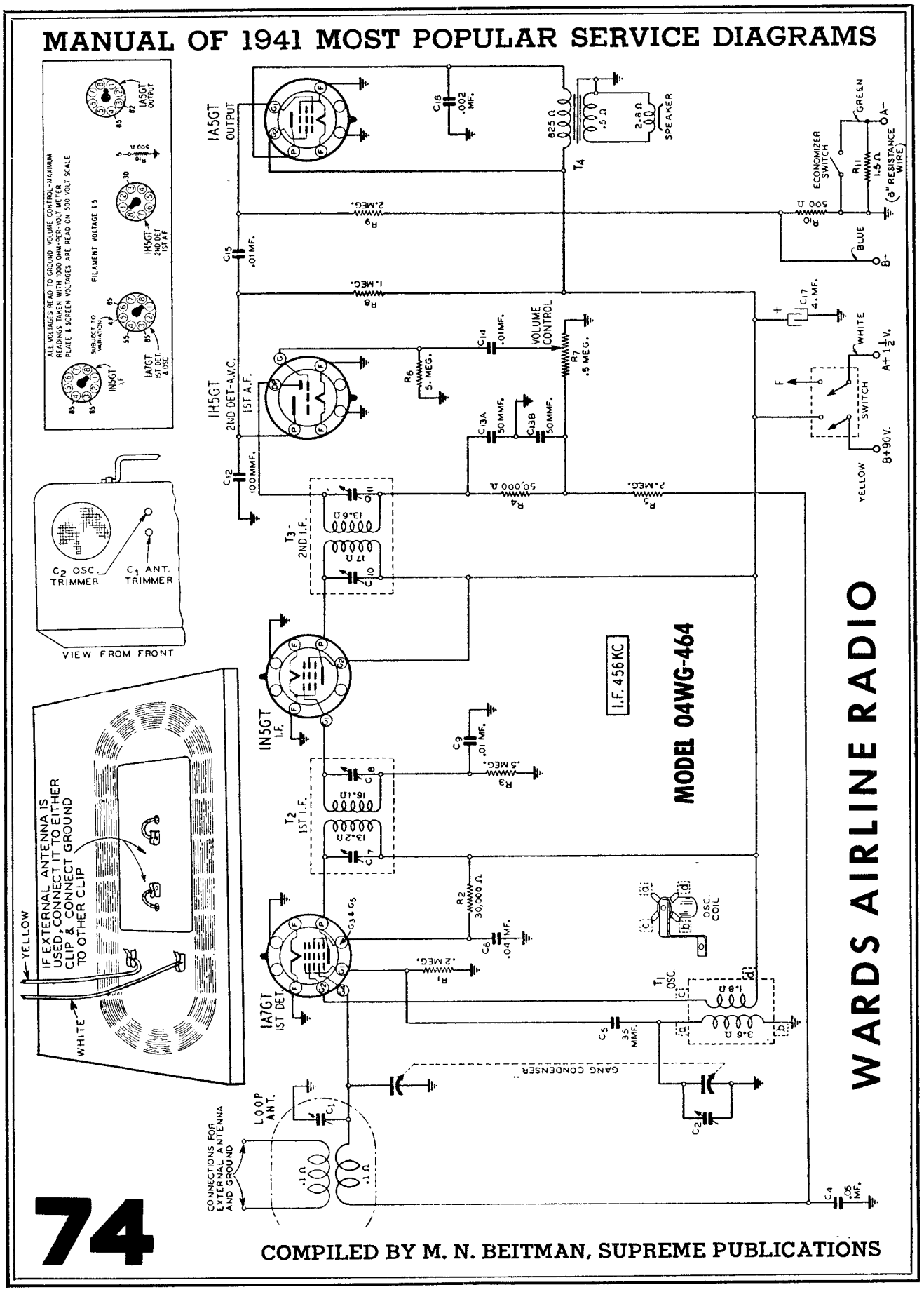
WARDS AIRLINE RADIO
MODEL 04WG-464
I.F. 456KC
1A5GT OUTPUT
1H5GT 2ND DET-A.V.C. 1ST A.F.
1N5GT I.F.
1A7GT 1ST DET.
T1 OSC.
T2 1ST I.F.
T3 2ND I.F.
T4
SPEAKER
VOLUME CONTROL
ECONOMIZER SWITCH
SWITCH
GANG CONDENSER
LOOP ANT.
CONNECTIONS FOR EXTERNAL ANTENNA AND GROUND
OSC. COIL
C2 OSC TRIMMER
C1 ANT. TRIMMER
VIEW FROM FRONT
IF EXTERNAL ANTENNA IS USED, CONNECT IT TO EITHER CLIP & CONNECT GROUND TO OTHER CLIP
YELLOW
WHITE
GREEN
BLUE
A+1½V.
B+90V.
A-
B-
(8" RESISTANCE WIRE)
ALL VOLTAGES READ TO GROUND VOLUME CONTROL-MAXIMUM
READINGS TAKEN WITH 1000 OHM-PER-VOLT METER
PLATE & SCREEN VOLTAGES ARE READ ON 500 VOLT SCALE
FILAMENT VOLTAGE 1.5
SUBJECT TO VARIATION
1N5GT I.F.
1A7GT 1ST DET & OSC
1H5GT 2ND DET 1ST A.F.
1A5GT OUTPUT

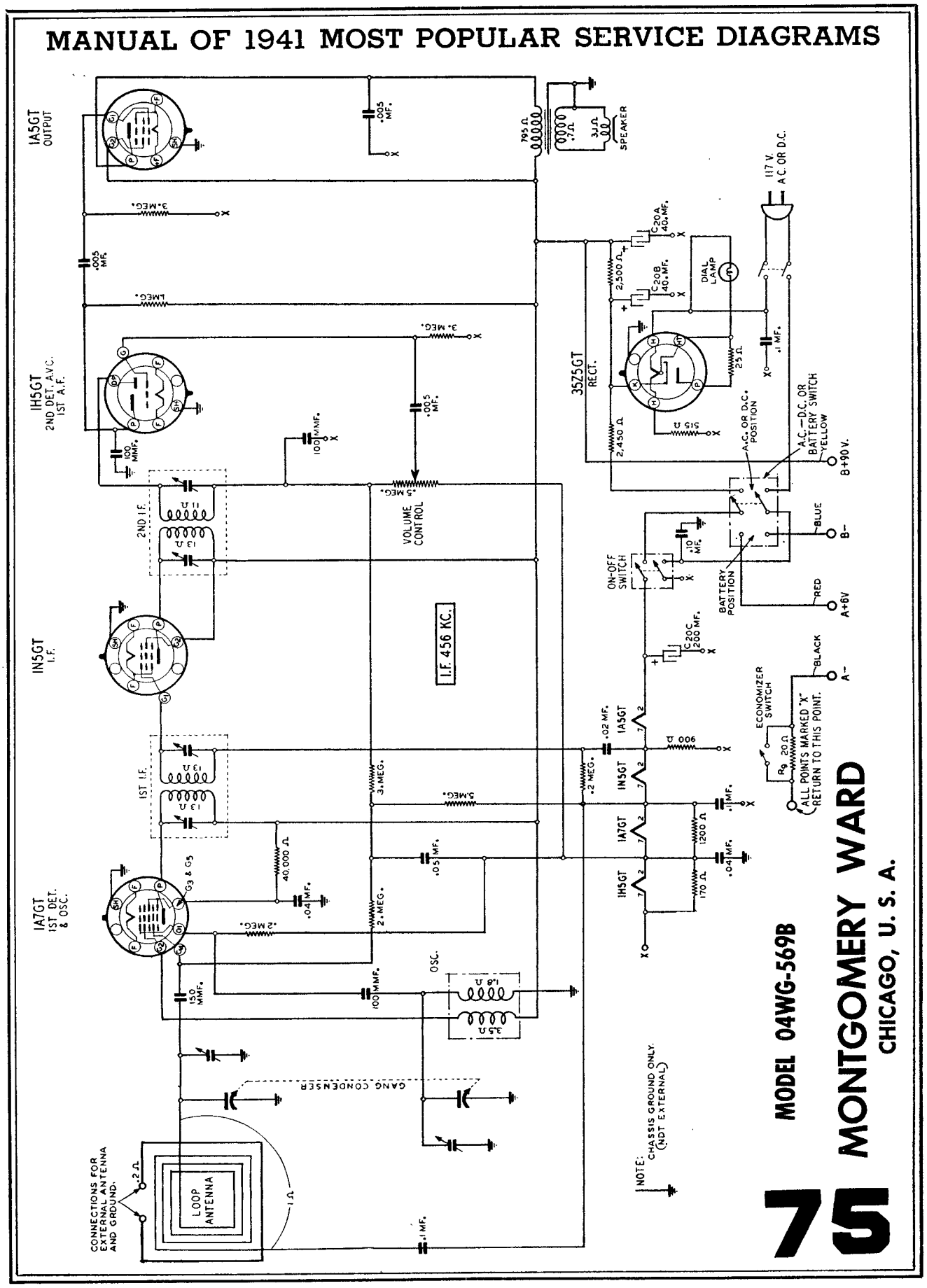
1A5GT
OUTPUT
1H5GT
2ND DET. A.V.C.
1ST A.F.
1N5GT
I.F.
1A7GT
1ST DET.
& OSC.
3525GT
RECT.
795 Ω
.7 Ω
3.1 Ω
SPEAKER
.005 MF.
3. MEG.
1. MEG.
100 MMF.
.5 MEG.
VOLUME CONTROL
2ND I.F.
1ST I.F.
11 Ω
13 Ω
I.F. 456 KC.
40,000 Ω
.04 MF.
.05 MF.
2. MEG.
150 MMF.
OSC.
1.8 Ω
3.5 Ω
GANG CONDENSER
CONNECTIONS FOR EXTERNAL ANTENNA AND GROUND.
LOOP ANTENNA
.2 Ω
1 Ω
.1 MF.
C20A 40. MF.
C20B 40. MF.
2,500 Ω
2,450 Ω
515 Ω
25 Ω
DIAL LAMP
117 V. A.C. OR D.C.
A.C. OR D.C. POSITION
A.C.—D.C. OR BATTERY SWITCH
YELLOW
B+90 V.
BLUE
B−
RED
A+6V
BLACK
A−
BATTERY POSITION
ON-OFF SWITCH
.10 MF.
C20C 200 MF.
.02 MF.
.2 MEG.
900 Ω
1A5GT
1N5GT
1A7GT
1H5GT
1200 Ω
170 Ω
ECONOMIZER SWITCH
R9 20 Ω
ALL POINTS MARKED "X" RETURN TO THIS POINT.
NOTE: CHASSIS GROUND ONLY. (NOT EXTERNAL)
MODEL 04WG-569B
MONTGOMERY WARD
CHICAGO, U. S. A.
75

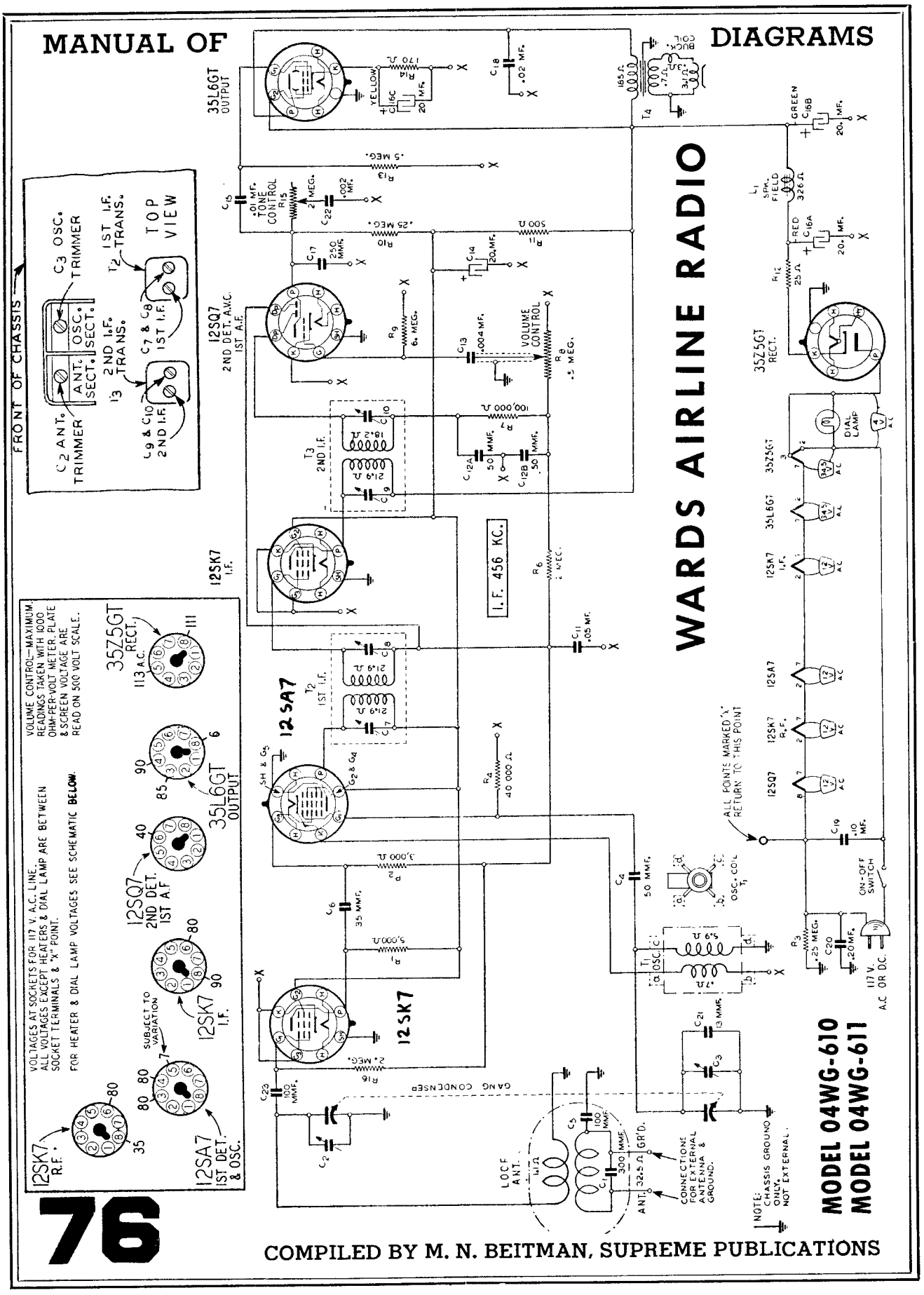
WARDS AIRLINE RADIO
MODEL 04WG-610
MODEL 04WG-611
FRONT OF CHASSIS
TOP VIEW
C3 OSC. TRIMMER
C2 ANT. TRIMMER
ANT. SECT.
OSC. SECT.
2ND I.F. TRANS.
1ST I.F. TRANS.
C7 & C8 1ST I.F.
C9 & C10 2ND I.F.
35L6GT OUTPUT
12SQ7 2ND DET. A.V.C. 1ST A.F.
12SK7 I.F.
12SA7
12SK7
35Z5GT RECT.
I.F. 456 KC.
VOLUME CONTROL
TONE CONTROL
ALL POINTS MARKED "X" RETURN TO THIS POINT
ON-OFF SWITCH
117 V. A.C. OR D.C.
GANG CONDENSER
LOOP ANT.
CONNECTIONS FOR EXTERNAL ANTENNA & GROUND.
NOTE: CHASSIS GROUND ONLY, NOT EXTERNAL.
VOLTAGES AT SOCKETS FOR 117 V. A.C. LINE. ALL VOLTAGES EXCEPT HEATERS & DIAL LAMP ARE BETWEEN SOCKET TERMINALS & "X" POINT.
FOR HEATER & DIAL LAMP VOLTAGES SEE SCHEMATIC BELOW.
VOLUME CONTROL—MAXIMUM. READINGS TAKEN WITH 1000 OHM-PER-VOLT METER. PLATE & SCREEN VOLTAGE ARE READ ON 500 VOLT SCALE.
12SK7 R.F.
12SA7 1ST DET. & OSC.
12SK7 I.F.
12SQ7 2ND DET. 1ST A.F.
35L6GT OUTPUT
35Z5GT RECT.
SUBJECT TO VARIATION

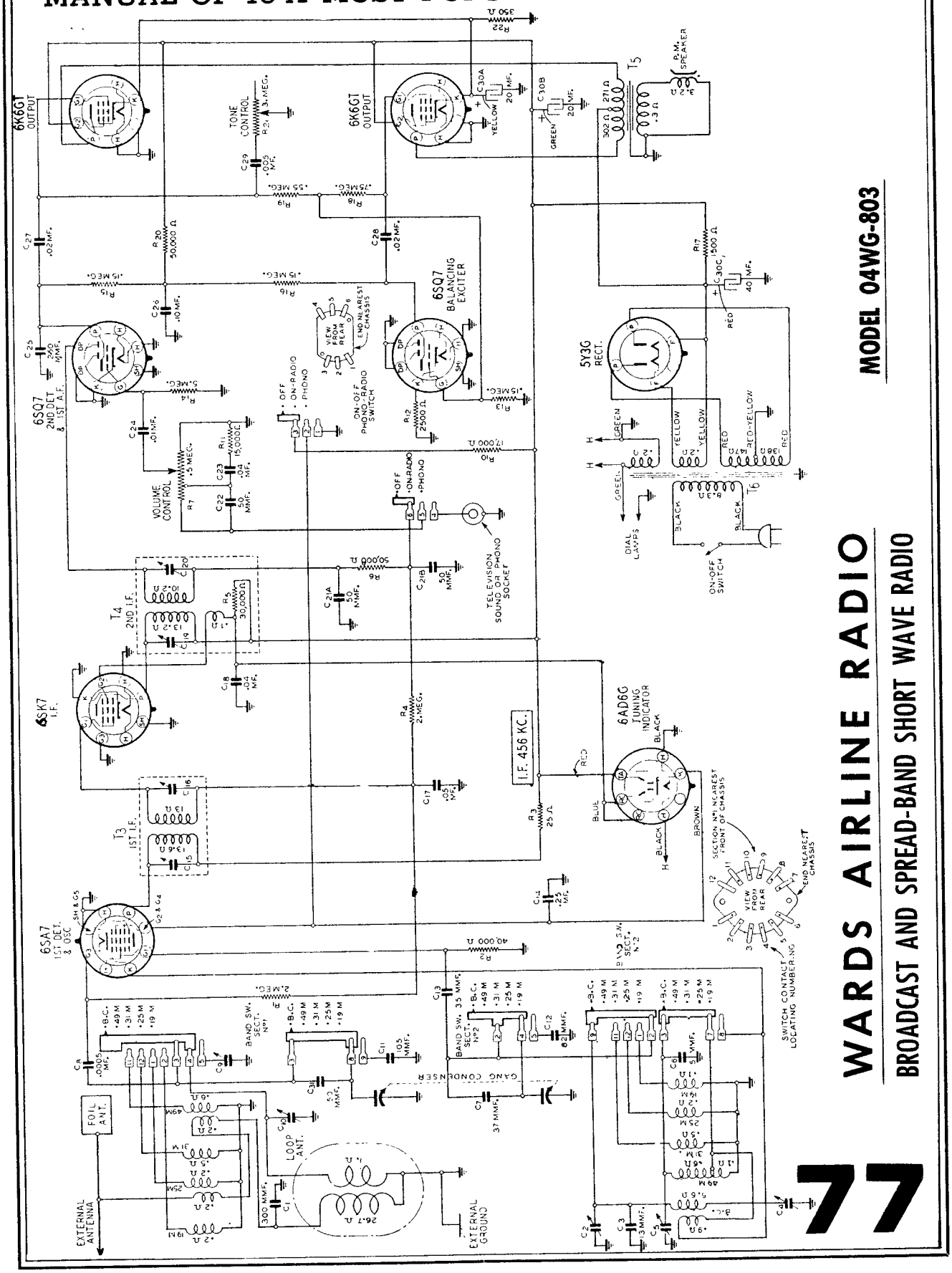

WARDS AIRLINE RADIO

BROADCAST AND SPREAD-BAND SHORT WAVE RADIO

MODEL 04WG-803

WARDS

MODEL 04WG-731A

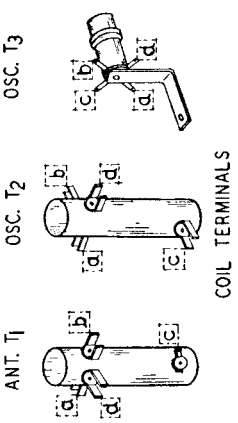

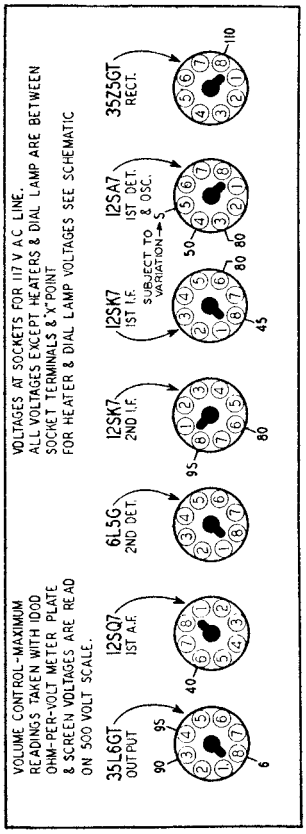

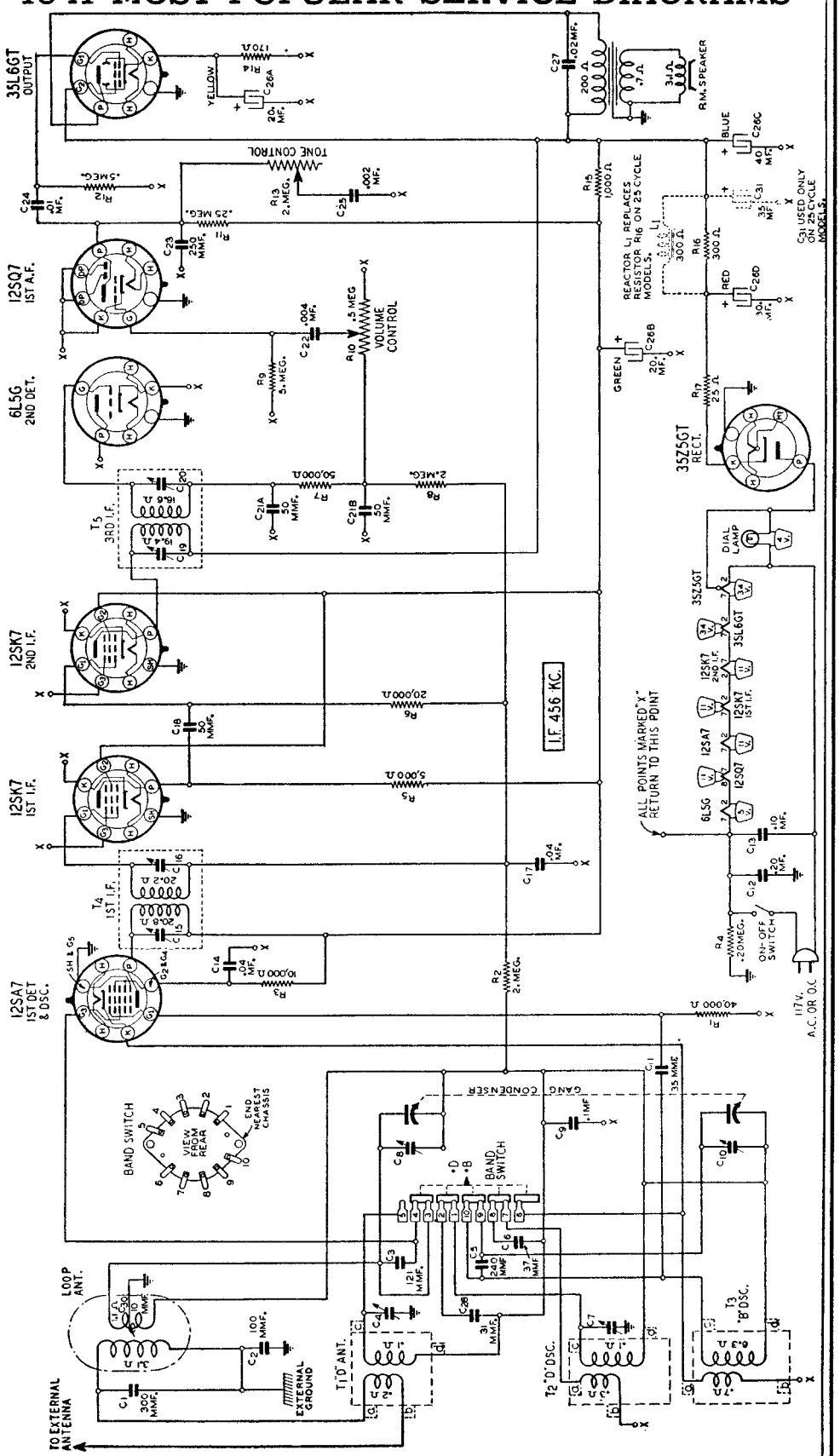

MONTGOMERY WARD

MODEL 14WG-672

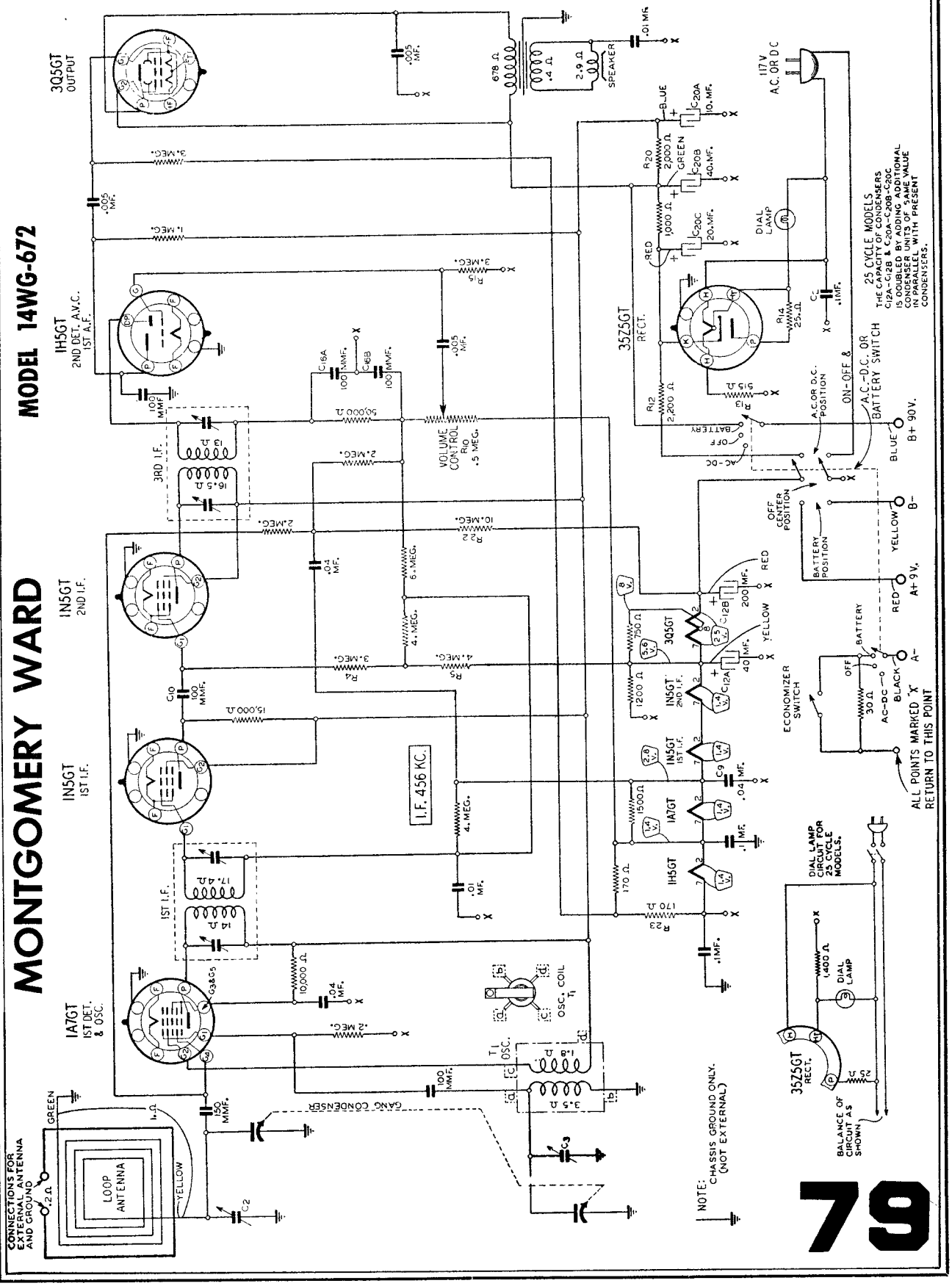

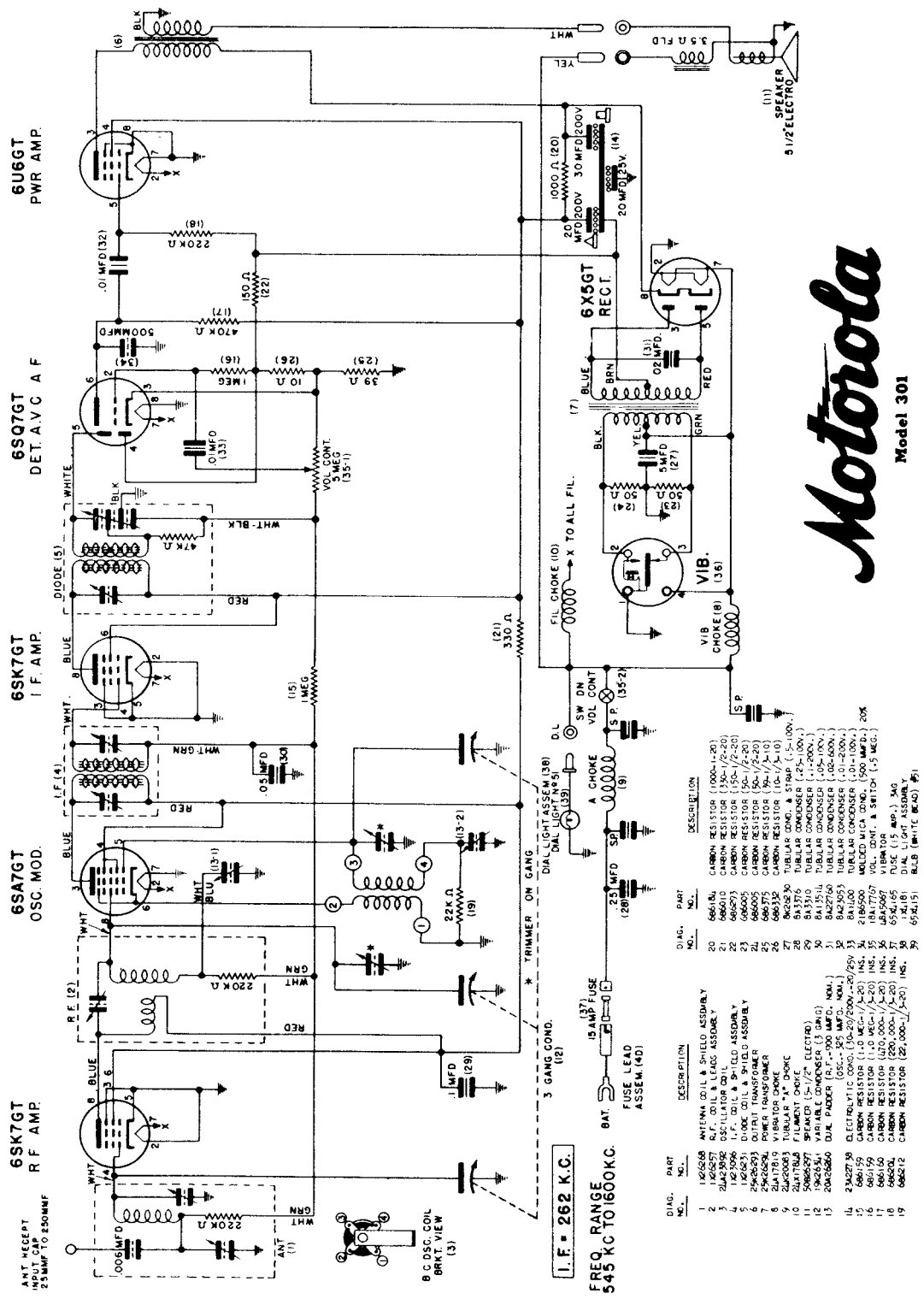
6U6GT
PWR AMP.
6SQ7GT
DET. A.V.C. A.F.
6SK7GT
I.F. AMP.
6SA7GT
OSC. MOD.
6SK7GT
R.F. AMP.
6X5GT
RECT.
VIB.
SPEAKER
8 1/2" ELECTRO
Motorola
Model 301
I.F. = 262 K.C.
FREQ. RANGE
545 KC TO 1600 KC.
3 GANG COND.
TRIMMER ON GANG
DIAL LIGHT ASSEM.
FUSE LEAD ASSEM.
B.C. OSC. COIL BRKT. VIEW
ANT RECEPT INPUT CAP 25 MMF TO 250 MMF
FIL. CHOKE
VIB CHOKE
A CHOKE
SW ON VOL CONT
TO ALL FIL.
VOL. CONT. 5 MEG.
DIAGRAM OF PARTS

MANUAL OF 1941 MOST POPULAR SERVICE DIAGRAMS

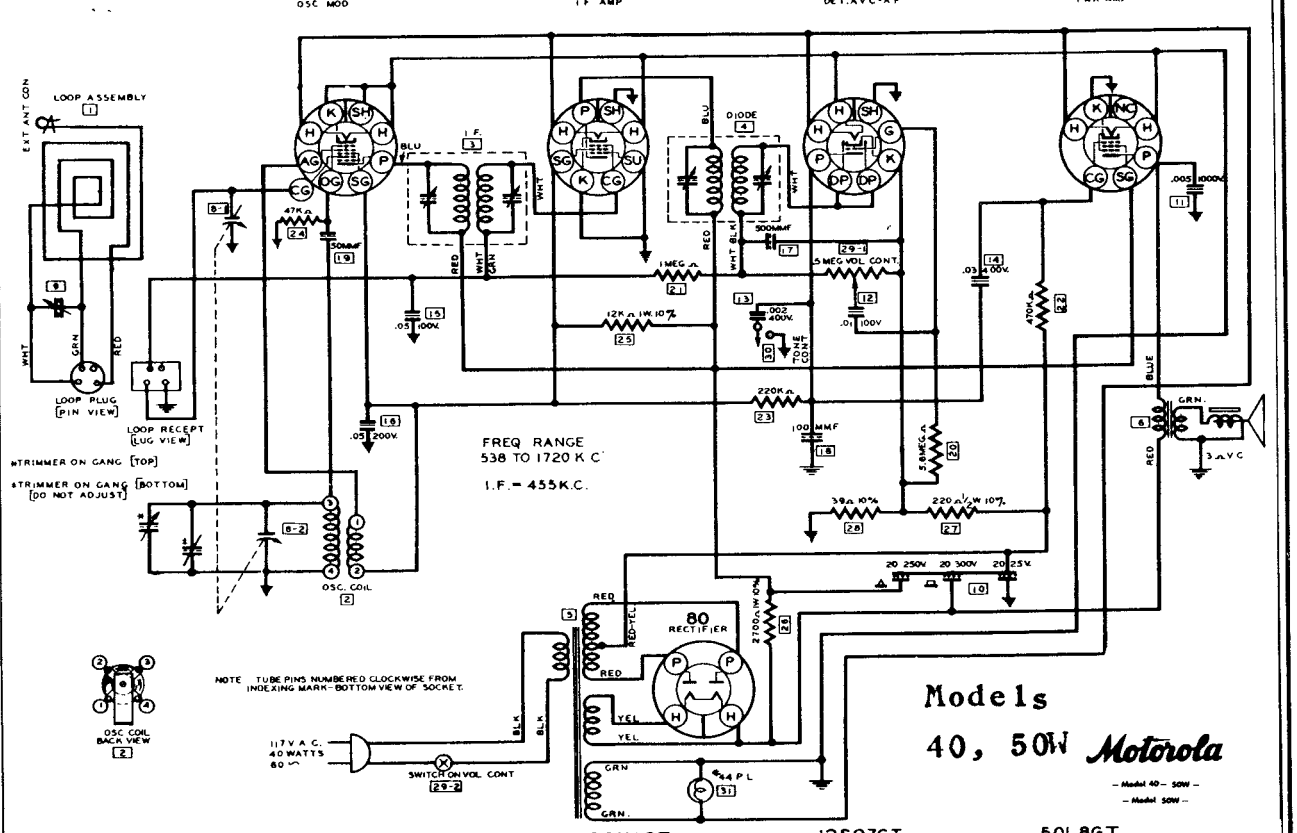

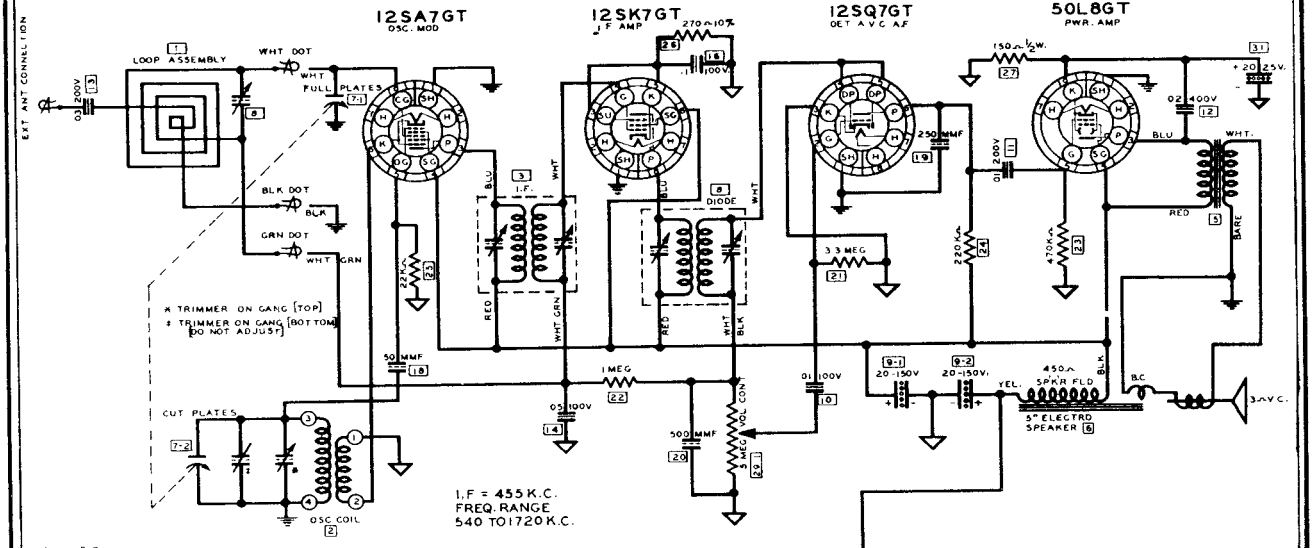

Diag. No.	Part No.	Description
1	1320957	Back & Loop Assembly
2	2S420909	Osc. Coil (Ceramic) Grn-Blk. Det.
3	1321893	I.F. Coil & Shield Assembly
4	1320955	Diode Coil & Shield Assembly
5	2S420901	Output Transformer
6	5S820063	Speaker (5" Electro)
7	1320906	Gang & Pulley Assembly (2 Gang)
8	2S413760	Trimmer & "U" Bracket (On Loop Assembly)
9	2S420508	Electrolytic Cond. & Strap (20-20/150V)
10	898901	Tubular Condenser (.01-100V.)
11	898825	Tubular Condenser (.01-200V.)
12	898802	Tubular Condenser (.02-400V.)
13	898833	Tubular Condenser (.03-400V.) On Loop Assembly.
14	898805	Tubular Condenser (.05-100V.)
15	898816	Tubular Condenser (.05-400V.)
16	898811	Tubular Condenser (.1-100V.)
17	898810	Tubular Condenser (.25-100V.)
18	2186503	Molded Mica Condenser (50 MMF) 20%
19	2186517	Molded Mica Condenser (250 MMF) 20%
20	2186500	Molded Mica Condenser (500 MMF) 20%
21	686179	Carbon Resistor (3.3 Meg-1/2-20)M.I.
22	686071	Carbon Resistor (1.0 Meg-1/2-20)M.I.
23	686011	Carbon Resistor (470,000-1/2-20)M.I.
24	686003	Carbon Resistor (220,000-1/2-20)M.I.
25	686050	Carbon Resistor (22,000-1/2-20)M.I.
26	686197	Carbon Resistor (270-1/2-10)M.I.
27	686293	Carbon Resistor (150-1/2-20)M.I.
28	686067	Carbon Resistor (33-1/2-20)M.I.
29	18A11689	Volume Control & Switch (.5 Meg)
30	6S31192	Bulb (Green Bead) #47
31	2S420953	Electrolytic Condenser (20 mfd.- 25V.)

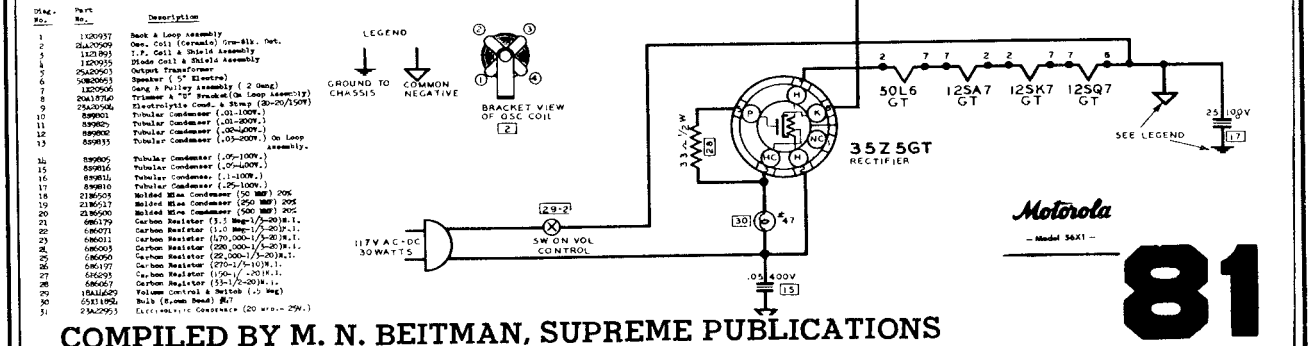

COMPILED BY M. N. BEITMAN, SUPREME PUBLICATIONS

CIRCUIT DIAGRAM MODELS 65BP1-2-3-4

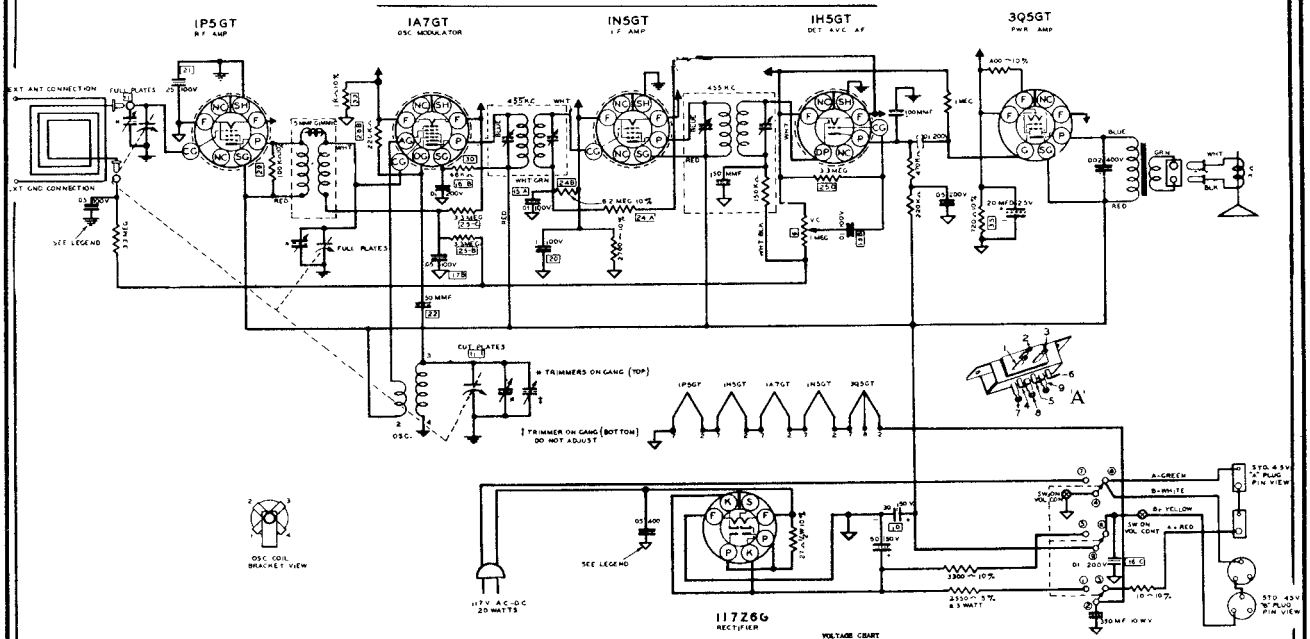

VOLTAGE CHART

POSITION	PLATE	SCREEN	BIAS
R.F.	80	80	1.1
Osc.-Mod.	80	40	3.7
I.F.	80	80	4.8
Det.-AVC-AF	20	-	2.3
Power	80	80	7.8
Rect.	-	120	-

All voltages measured from socket terminal to common negative using 1000 Ohms per volt meter

Motorola

Motorola Models 58-F1, 58-FRC

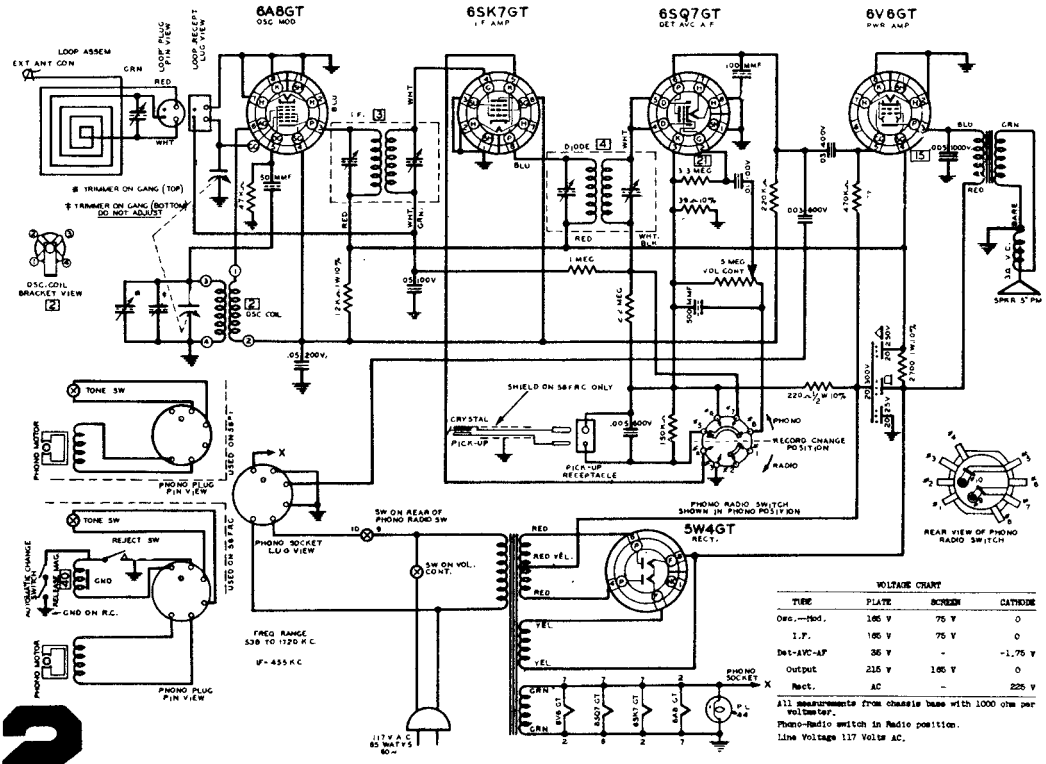

VOLTAGE CHART

TUBE	PLATE	SCREEN	CATHODE
Osc.-Mod.	165 V	75 V	0
I.F.	165 V	75 V	0
Det-AVC-AF	36 V	-	-1.75 V
Output	215 V	165 V	0
Rect.	AC	-	225 V

All measurements from chassis base with 1000 ohm per voltmeter.
Phono-Radio switch in Radio position.
Line Voltage 117 Volts AC.

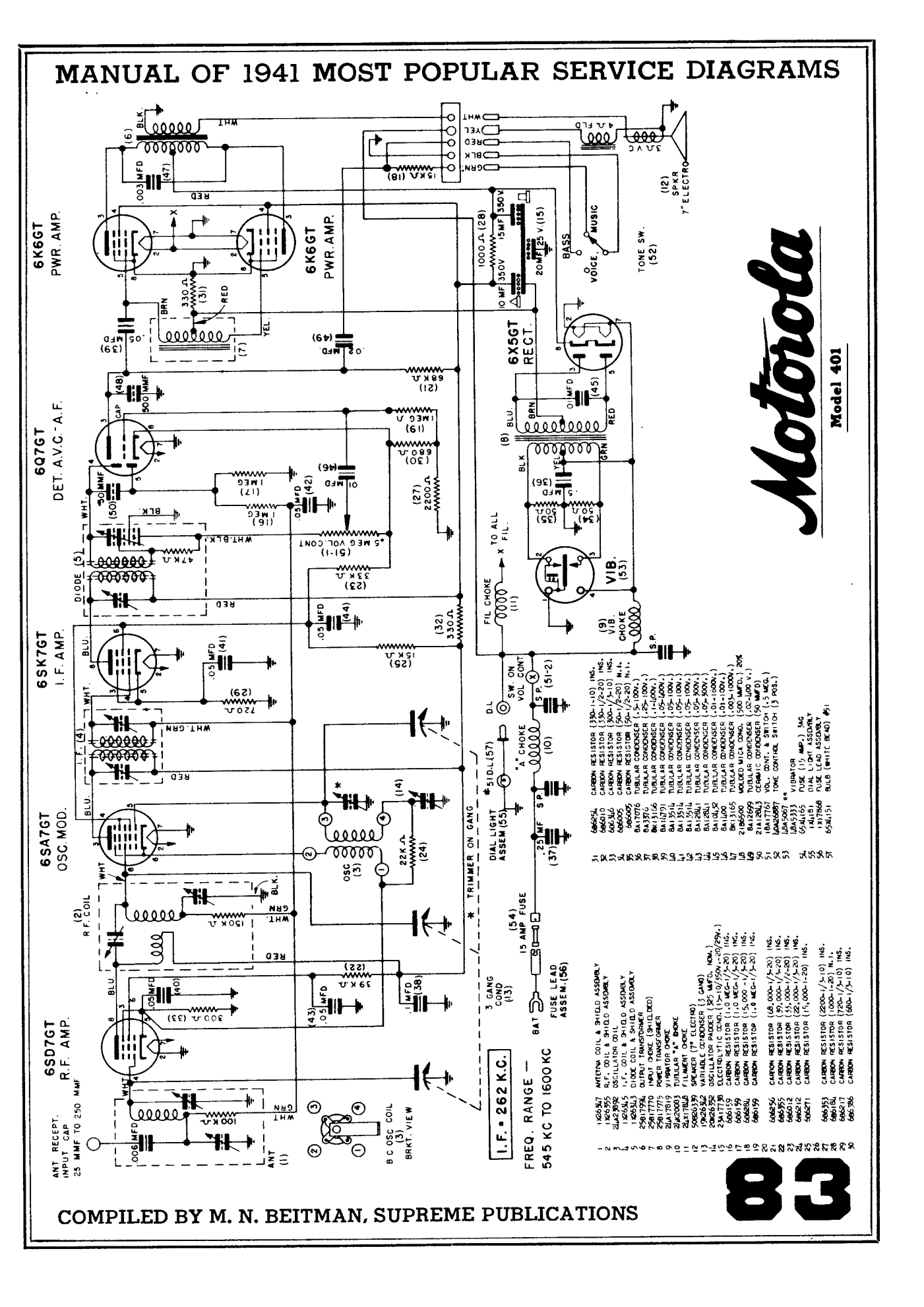
Motorola
Model 401
6K6GT PWR. AMP.
6K6GT PWR. AMP.
6Q7GT DET. A.V.C.-A.F.
6SK7GT I.F. AMP.
6SA7GT OSC. MOD.
6SD7GT R.F. AMP.
6X5GT RECT.
V1B.
I.F. = 262 K.C.
FREQ. RANGE — 545 KC TO 1600 KC
TRIMMER ON GANG
ANT RECEPT. INPUT CAP 25 MMF TO 250 MMF
B C OSC COIL (3) BRKT. VIEW
3 GANG COND. (13)
15 AMP FUSE
FUSE LEAD ASSEM. (56)
DIAL LIGHT ASSEM (55)
SW. ON VOL. CONT.
FIL. CHOKE (11)
TO ALL FIL.
V1B. CHOKE (9)
"A" CHOKE (10)
BASS
VOICE
MUSIC
TONE SW. (52)
(12) SPKR 7" ELECTRO
3 A V.C.
4 A FLD
1 ANTENNA COIL & SHIELD ASSEMBLY 1X26347
2 R.F. COIL & SHIELD ASSEMBLY 1X26955
3 OSCILLATOR COIL 2UX28992
4 I.F. COIL & SHIELD ASSEMBLY 1X26345
5 DIODE COIL & SHIELD ASSEMBLY 1X26343
6 OUTPUT TRANSFORMER 25X17594
7 INPUT CHOKE (SHIELDED) 25X17770
8 POWER TRANSFORMER 25X17775
9 VIBRATOR CHOKE 2UX17819
10 TUBULAR "A" CHOKE 2UX20003
11 FILAMENT CHOKE 2UX17848
12 SPEAKER (7" ELECTRO) 50X26339
13 VARIABLE CONDENSER (3 GANG) 1PX26342
14 OSCILLATOR CONDENSER (39 MMFD. NOM.) 20X26392
15 ELECTROLYTIC COND. (17-19/150V.-20/29V.) 2UX17739
16 CARBON RESISTOR (1.0 MEG.-1/2-20) INS. 66X159
17 CARBON RESISTOR (1.0 MEG.-1/2-20) INS. 66X159
18 CARBON RESISTOR (15,000 -1/2-20) INS. 66X184
19 CARBON RESISTOR (1.0 MEG.-1/2-20) INS. 66X159
20 CARBON RESISTOR (68,000-1/2-20) INS. 66X256
21 CARBON RESISTOR (39,000-1/2-20) INS. 66X255
22 CARBON RESISTOR (33,000-1/2-20) INS. 66X012
23 CARBON RESISTOR (22,000-1/2-20) INS. 66X212
24 CARBON RESISTOR (15,000-1-20) INS. 66X271
25
26
27 CARBON RESISTOR (2200-1/2-10) INS. 66X353
28 CARBON RESISTOR (1000-1/2-10) INS. 66X184
29 CARBON RESISTOR (720-1/2-10) INS. 66X217
30 CARBON RESISTOR (680-1/2-10) INS. 66X386
31 CARBON RESISTOR (330-1-10) INS. 66X94
32 CARBON RESISTOR (330-1/2-20) INS. 66X010
33 CARBON RESISTOR (300-1/2-10) INS. 66X346
34 CARBON RESISTOR (90-1/2-20) N.I. 66X005
35 CARBON RESISTOR (90-1/2-20) N.I. 66X005
36 TUBULAR CONDENSER (.25-1000V.) 8A17770
37 TUBULAR CONDENSER (.25-100V.) 8A17776
38 TUBULAR CONDENSER (1-1,000V.) 8A13166
39 TUBULAR CONDENSER (.05-400V.) 8A11271
40 TUBULAR CONDENSER (.05-100V.) 8A13514
41 TUBULAR CONDENSER (.05-100V.) 8A13514
42 TUBULAR CONDENSER (.05-100V.) 8A13514
43 TUBULAR CONDENSER (.05-500V.) 8A12841
44 TUBULAR CONDENSER (.05-500V.) 8A12841
45 TUBULAR CONDENSER (.01-1500V.) 8A10L92
46 TUBULAR CONDENSER (.01-1500V.) 8A14100
47 TUBULAR CONDENSER (.01-1500V.) 8A14100
48 TUBULAR CONDENSER (.001-1000V.) 8K13165
49 MOLDED MICA COND. (500 MMFD.) 20% 21B6500
50 TUBULAR CONDENSER (.02-400 V.) 8A12699
51 CERAMIC CONDENSER (50 MMFD.) 21A12843
52 VOL. CONT. & SWITCH (1 POL.) 18A17767
53 TONE CONTROL SWITCH (3 POS.) 10A26897
54 FUSE (15 AMP.) 3AG 1A5733
55 VIBRATOR 1A5733
56 DIAL LIGHT ASSEMBLY 1X4181
57 FUSE LEAD ASSEMBLY 1X17868
58 BULB (WHITE BEAD) #51 65X4151

SENSITIVITY AND STAGE GAIN MEASUREMENTS

Average Microvolt Input *	Generator Set At	Generator Feeder Connected To	Dummy Antenna Capacity	Leak Resistance	Output Meter Reading **
2,800	262 K.C.	I.F. Grid	.1 Mfg.	.5 Meg.	1.74
420	262 K.C.	Mod. Grid	.1 Mfg.	.5 Meg.	1.74
510	600 K.C.	Mod. Grid	.1 Mfd.	.5 Meg.	1.74
8	600 K.C.	R.F. Grid	.1 Mfd.	.5 Meg.	1.74
2	600 K.C.	Ant. Lead	***	None	1.74

Volume Control Set At Maximum
* 1 Watt = 1.74 Volts

Tone Control Set At Voice
** Output meter connected across voice coil.
*** Use Special Dummy Part No. 1X26767 or Booster Coil Part No. 24A26751 in series with a 35 Mmf. Condenser.

ALIGNMENT CHART

Operations In Order	Gang Condenser Set At	Dummy Antenna	Generator Connected To	Adjust Trimmers No.	Generator Set At
1	Minimum	.1 Mfd.	Osc.-Mod. Grid	1-2-3-4	262 K.C.
2	1600 K.C.	.1 Mfd.	Osc.-Mod. Grid	5	1600 K.C.
3	600 K.C.	.1 Mfd.	Osc.-Mod. Grid	6	600 K.C.
4	1400 K.C.	*	To Special Dummy	7	1400 K.C.
5	1400 K.C.	*	To Special Dummy	8	1400 K.C.
6	600 K.C.	*	To Special Dummy	9	600 K.C.

* Use Special Dummy Part No. 1X26767 or Booster Coil Part No. 24A26751 in series with a 35 Mmf. Condenser.

VOLTAGE CHART				
TUBE		PLATE TO GND	SCREEN TO GND	CATH. TO GND
6SD7GT	R.F. AMP	190 V.	125 V.	3 V.
6SA7GT	OSC. MOD	190 V.	60 V.	3 V.
6SK7GT	I.F. AMP	195 V.	60 V.	2.75 V.
6Q7GT	DET. A.V.C.-A.F	130 V	—	6.5 V.
6K6GT	PWR. AMP	220 V	195 V.	0
6K6GT	PWR. AMP	220 V.	195 V.	0
6X5GT	RECT.	A.C.	—	225 V.

ALL VOLTAGES MEASURED WITH 1000 OHM PER VOLT VOLTMETER

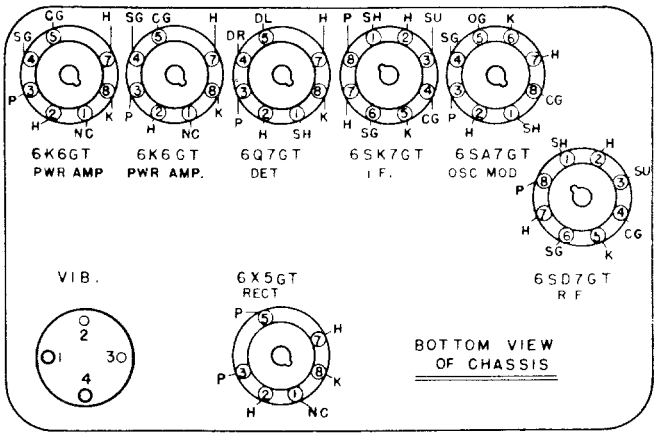

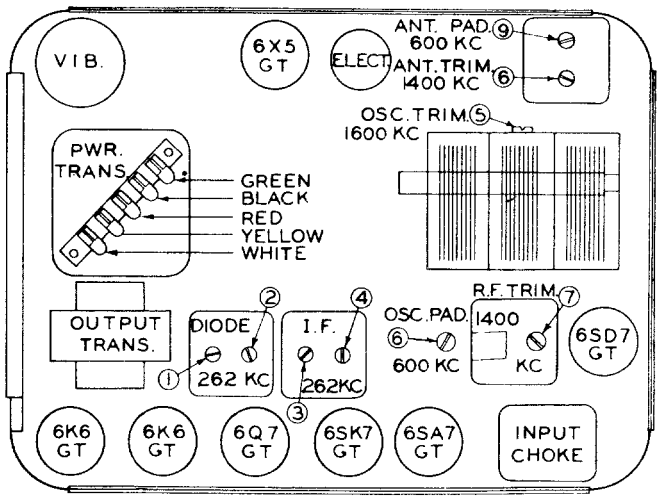

Galvin Mfg. Corp.
4545 Augusta Blvd.
Chicago, Illinois

MOTOROLA

Model 401

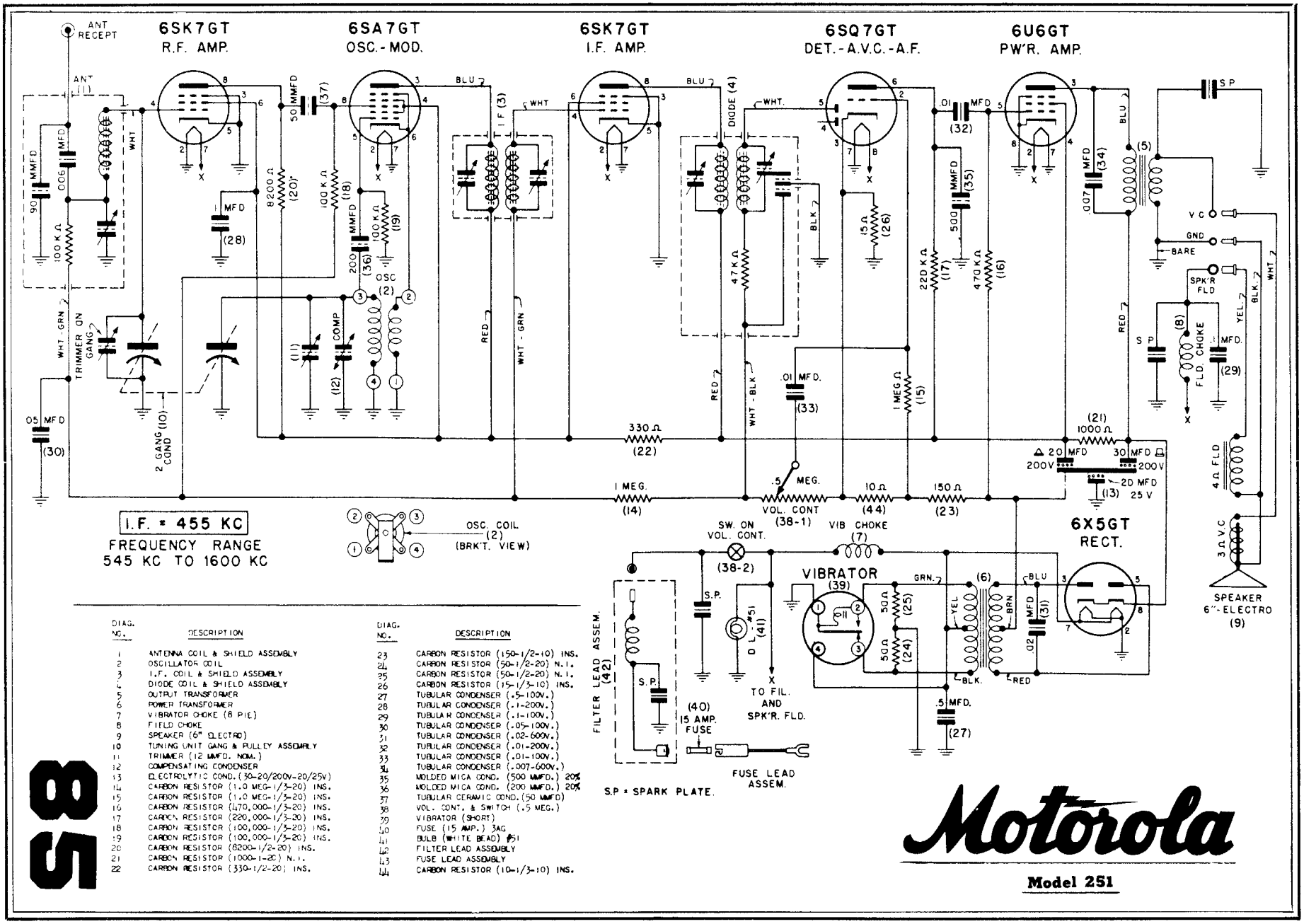

DIAG. NO.	DESCRIPTION
1	ANTENNA COIL & SHIELD ASSEMBLY
2	OSCILLATOR COIL
3	I.F. COIL & SHIELD ASSEMBLY
4	DIODE COIL & SHIELD ASSEMBLY
5	OUTPUT TRANSFORMER
6	POWER TRANSFORMER
7	VIBRATOR CHOKE (8 PIE)
8	FIELD CHOKE
9	SPEAKER (6" ELECTRO)
10	TUNING UNIT GANG & PULLEY ASSEMBLY
11	TRIMMER (12 MMFD. NOM.)
12	COMPENSATING CONDENSER
13	ELECTROLYTIC COND. (30-20/200V-20/25V)
14	CARBON RESISTOR (1.0 MEG-1/3-20) INS.
15	CARBON RESISTOR (1.0 MEG-1/3-20) INS.
16	CARBON RESISTOR (470,000-1/3-20) INS.
17	CARBON RESISTOR (220,000-1/3-20) INS.
18	CARBON RESISTOR (100,000-1/3-20) INS.
19	CARBON RESISTOR (100,000-1/3-20) INS.
20	CARBON RESISTOR (8200-1/2-20) INS.
21	CARBON RESISTOR (1000-1-20) N.I.
22	CARBON RESISTOR (330-1/2-20) INS.

DIAG. NO.	DESCRIPTION
23	CARBON RESISTOR (150-1/2-10) INS.
24	CARBON RESISTOR (50-1/2-20) N.I.
25	CARBON RESISTOR (50-1/2-20) N.I.
26	CARBON RESISTOR (15-1/3-10) INS.
27	TUBULAR CONDENSER (.5-100V.)
28	TUBULAR CONDENSER (.1-200V.)
29	TUBULAR CONDENSER (.1-100V.)
30	TUBULAR CONDENSER (.05-100V.)
31	TUBULAR CONDENSER (.02-600V.)
32	TUBULAR CONDENSER (.01-200V.)
33	TUBULAR CONDENSER (.01-100V.)
34	TUBULAR CONDENSER (.007-600V.)
35	MOLDED MICA COND. (500 MMFD.) 20%
36	MOLDED MICA COND. (200 MMFD.) 20%
37	TUBULAR CERAMIC COND. (50 MMFD)
38	VOL. CONT. & SWITCH (.5 MEG.)
39	VIBRATOR (SHORT)
40	FUSE (15 AMP.) 3AG
41	BULB (WHITE BEAD) #51
42	FILTER LEAD ASSEMBLY
43	FUSE LEAD ASSEMBLY
44	CARBON RESISTOR (10-1/3-10) INS.

ARVIN HOME RADIO CHASSIS RE-82

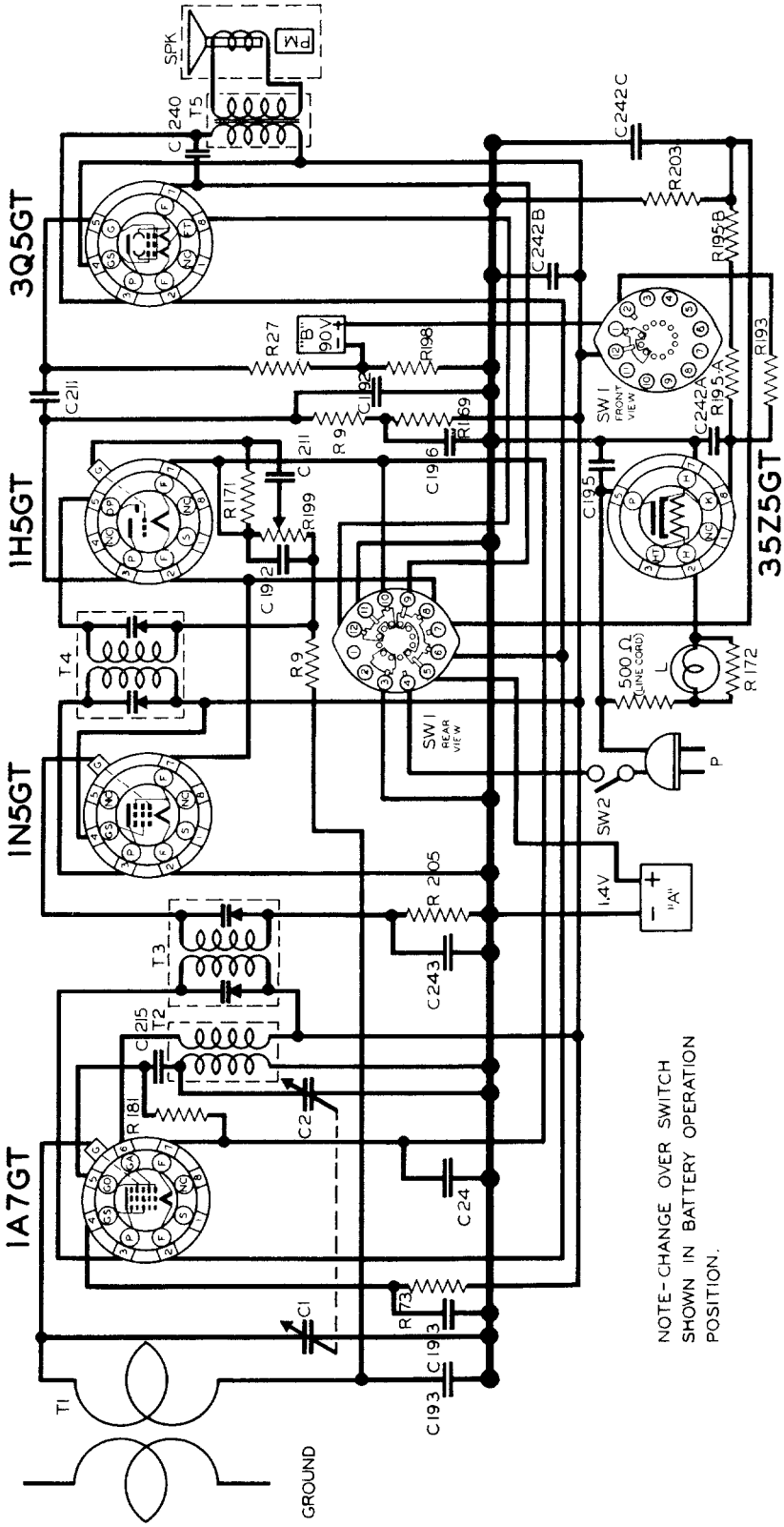

NOTE-CHANGE OVER SWITCH SHOWN IN BATTERY OPERATION POSITION.

R	OHM	W	PART NO.
9	1 M	¼	17-2080
27	2 M	¼	17-4788
73	30K	¼	17-4276
169	50K	¼	17-14282
171	15M	¼	17-14288
172	100	½	17-14289
181	100K	¼	17-14303
195A	460	2¾	17-14351
195B	1500	5 ¼	
198	400	¼	17-14343
199	1M	VC	17-14350
203	450	¼	17-14354
193	2K	¼	17-14337
205	3M	¼	17-14356

C	CAPACITY	VOLT	PART NO.
1	TWO-GANG		17-16549
2	VARIABLE		
192	.00025	600	17-14273
193	.05	200	17-14274
195	.05	400	17-14276
196	.1	200	17-14277
211	.01	200	17-14306
215	.0001	600	17-14310
24	.5	200	17-14040A
240	.003	400	17-14348
242A	40	150	
242B	20	150	17-14353
242C	100	25	
243	.002	200	17-14357

T	TYPE	PART No.
1	ANTENNA LOOP	00-16923
2	OSCILLATOR COIL	00-16404
3	FIRST I.F.	00-16578
4	SECOND I.F. COIL	00-16579
5	OUTPUT TRANS.	00-16586

SYMBOL	DESCRIPTION	PART NO.
A	1.5 VOLT "A" BATTERY	17-16563
B	TWO 45 VOLT "B" BATTERIES	17-16562
L	DIAL LIGHT BULB MAZDA 47	17-16376
P	LINE CORD & PLUG ASSEMBLY	17-16492
SPK	SPEAKER ASSEMBLY-5" PERMANENT MAGNET	17-16613
SW1	AC-DC-BATTERY SWITCH	17-16564
SW2	VOLUME CONTROL & LINE SWITCH	17-14350

I F PEAK 455 K.C.
BALANCE 1400 K.C. - CHECK AT 600 K.C.

NOBLITT-SPARKS INDUSTRIES, INC., COLUMBUS, INDIANA.

ARVIN MODEL 822 RADIO RECEIVER

COMPILED BY M. N. BEITMAN, SUPREME PUBLICATIONS

NOBLITT-SPARKS INDUSTRIES, INC.

Columbus, Indiana

ARVIN HOME RADIO CHASSIS RE-76

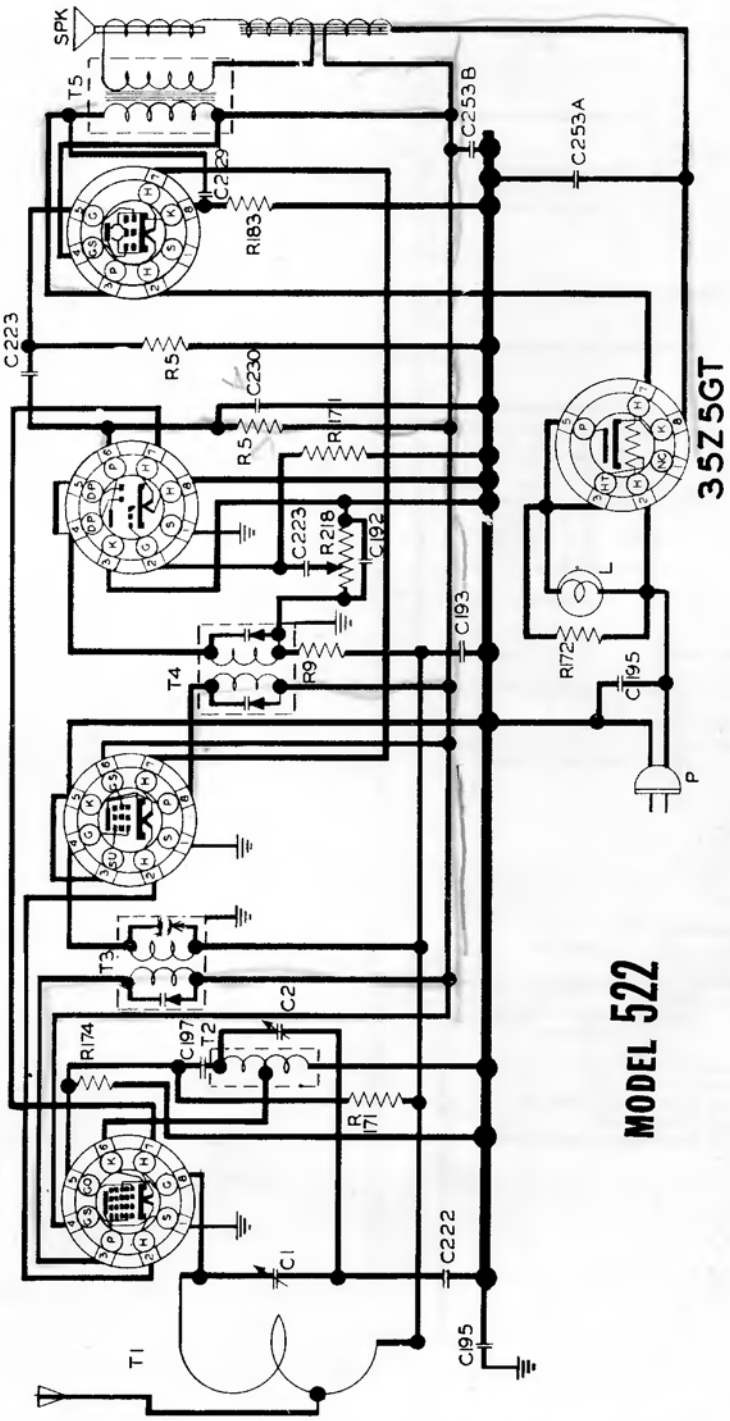

RESISTORS		
R	OHMS	PART NO
28	1 M	V.C. 17-6857
5	500K	14 17-2070
183	150	14 17-4316
174	20 K	14 17-4291
172	100	14 17-4289
171	1.5 M	14 17-4288
9	1 M	14 17-2080

CONDENSERS			
C	CAPACITY	VOLT	PART NO
1	TWO GANG		17-6841
2	VARIABLE		
253A	20 MFD	150	17-4375
253B	10 MFD	150	
192	.00025	600	17-4273
195	.05	400	17-4276
222	.2	400	17-4317
229	.02	400	17-4327
223	.002	400	17-4318
193	.05	200	17-4274
197	.0001	600	17-4278
230	.0005	400	17-4328

TRANSFORMERS		
T	TYPE	PART NO
1	ANTENNA LOOP	00-6851
2	OSCILLATOR COIL	00-6852
3	FIRST IF COIL	29-6853
4	SECOND IF COIL	29-6854
5	OUTPUT TRANSF	00-6869

MISCELLANEOUS UNITS		
SYMBOL	DESCRIPTION	PART NO
L	DIAL LIGHT BULB MAZDA #47	7-6378
P	LINE CORD & PLUG ASSY	17-6844
SPK	SPEAKER ASSY	17-6843

I.F. PEAK 455 K.C.
BALANCE 1400 K.C. - CHECK AT 600 K.C.
NOBLITT-SPARKS INDUSTRIES, INC.
COLUMBUS, INDIANA

NOBLITT-SPARKS INDUSTRIES, INC.

Columbus, Indiana

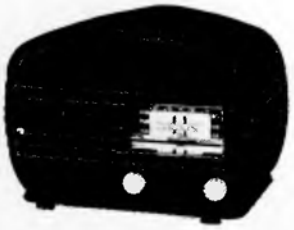

ARVIN HOME RADIO - CHASSIS RE-78

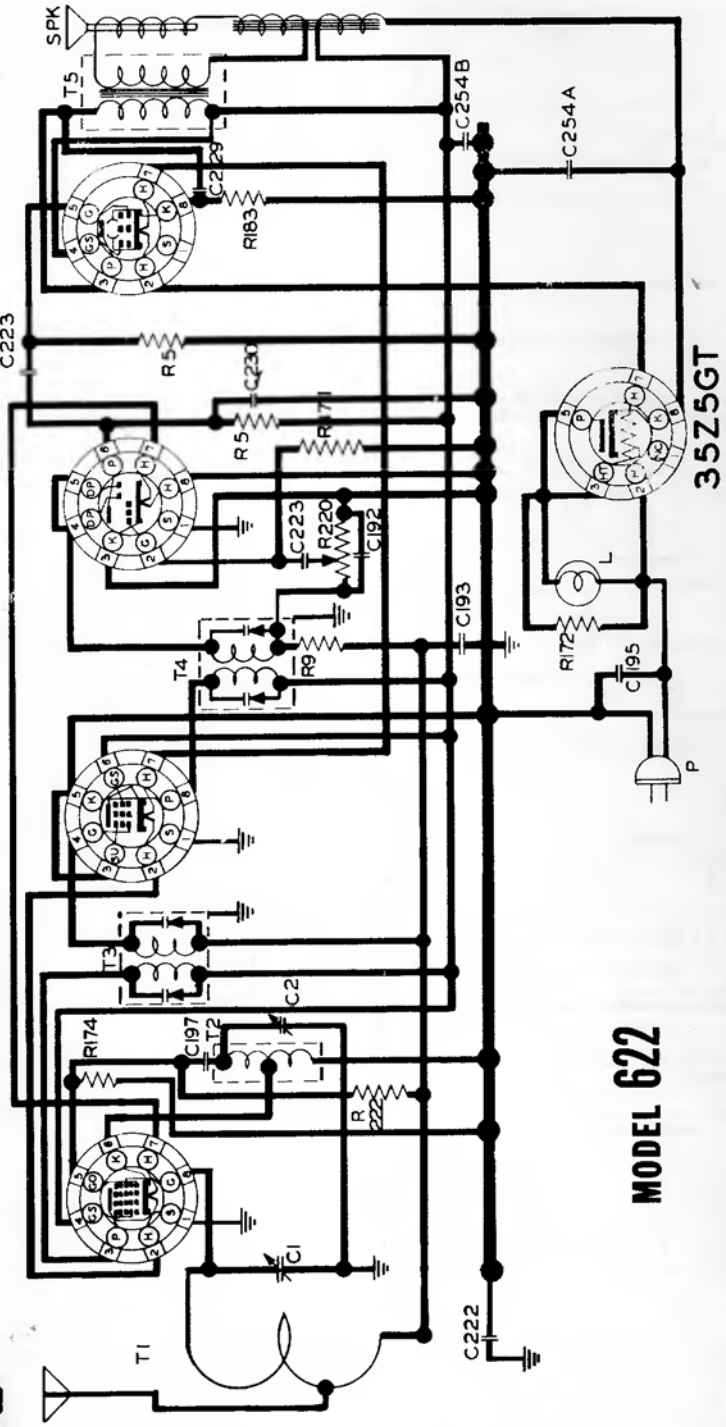

MODEL 622

RESISTORS				
R	OHM	W	PART NO	
220	1 M	V.C.	17-16876	
5	500K	1/4	17-2070	
183	150	1/4	17-14316	
174	20 K	1/4	17-14291	
172	100	1/4	17-14289	
222	10 M	1/4	17-14377	
9	1 M	1/4	17-2080	

CONDENSERS			
C	CAPACITY	VOLT	PART NO
1	TWO GANG		17-16841
2	VARIABLE		
254A	20 MFD.	150	17-14316
254B	10 MFD.	150	
192	.00025	600	17-14273
195	.05	400	17-14276
222	2	400	17-14317
229	.02	400	17-14327
223	.002	400	17-14318
193	.05	200	17-14274
197	.0001	600	17-14278
230	.0005	400	17-14328

TRANSFORMERS		
T	TYPE	PART NO
1	ANTENNA LOOP	00-16882
2	OSCILLATOR COIL	00-6891
3	FIRST I.F. COIL	00-16885
4	SECOND I.F. COIL	00-16886
5	OUTPUT TRANSF.	00-16883

MISCELLANEOUS UNITS		
SYMBOL	DESCRIPTION	PART NO
L	DIAL LIGHT BULB MAZDA #47	17-16376
P	LINE CORD & PLUG ASSY.	17-16874
SPK	SPEAKER ASSY.	17-16867

I.F. PEAK 455 K.C.
BALANCE 1400 K.C. - CHECK AT 600 K.C.
NOBLITT-SPARKS INDUSTRIES, INC.
COLUMBUS, INDIANA

COMPILED BY M. N. BEITMAN, SUPREME PUBLICATIONS

ARVIN CAR RADIO CHASSIS RE-84

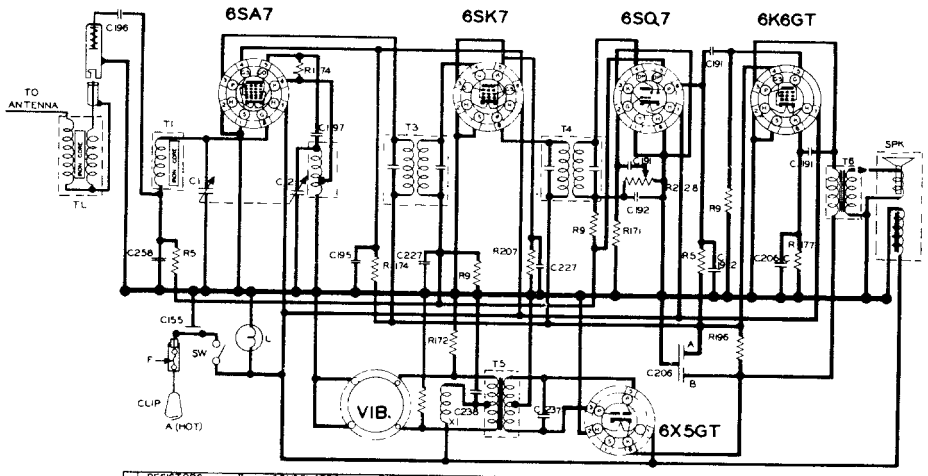

RESISTORS			
R	OHMS	W	PART NO
5	500 K	1/4	17-2070
9	1 M	1/4	17-2080
49	500 K	1/4	17-14288
170	100	1/4	17-14289
171	20 K	1/4	17-14291
172	470	1/4	17-14298
174	20 K	1/4	17-14291
177	850	1/4	17-14298
213	10 K	1/4	17-14369
207	300	1/4	17-14361

CONDENSERS			
C	CAPACITY	VOLT	PART NO
1	TWO-GANG		
2	VARIABLE		
33	.0002	200	17-14271
231	.005	200	17-14343
208A	10 MFD	300	
208B	10 MFD	300	17-14297
208C	20 MFD	25	
189	.05	400	17-14272
192	.00025	400	17-14273
193	.05	200	17-14274
195	.05	400	17-14276
219	.003	200	17-14312
203	.2	200	17-14242
230	.0005	400	17-14326
238	.004	600	17-14381
201	.5	150	17-14265
239	4-40 MMFD	PAD	17-14383
197	.0001	600	17-14275
198	.005	400	17-14279

CHOKES & TRANSFORMERS		
T-X	TYPE	PART NO
1	ANTENNA COIL	00-16244
2	OSCILLATOR COIL	00-16893
3	FIRST I.F. COIL	00-17003
4	SECOND I.F. COIL	00-17004
5	POWER TRANSF	00-16448
6	OUTPUT TRANSF	00-16443
X	CHOKE	
1	SUPPRESSION CHOKE	29-16457

MISCELLANEOUS UNITS		
SYMBOL	DESCRIPTION	PART NO
F	FUSE 2 AMP	17-2226
L	DIAL LIGHT BULB MAZDA NO 47	17-14374
SPK	SPEAKER ASSEMBLY	17-14439
SW	POWER SWITCH	CCR
TL	TRANSMISSION LINE	00-16989
VIB	VIBRATOR	17-14747

I.F. PEAK 455 K.C.
FREQUENCY RANGE 1575 TO 540 K.C.
NOBLITT-SPARKS INDUSTRIES, INC
COLUMBUS, INDIANA

MODEL 520

ARVIN CAR RADIO — CHASSIS RE-86

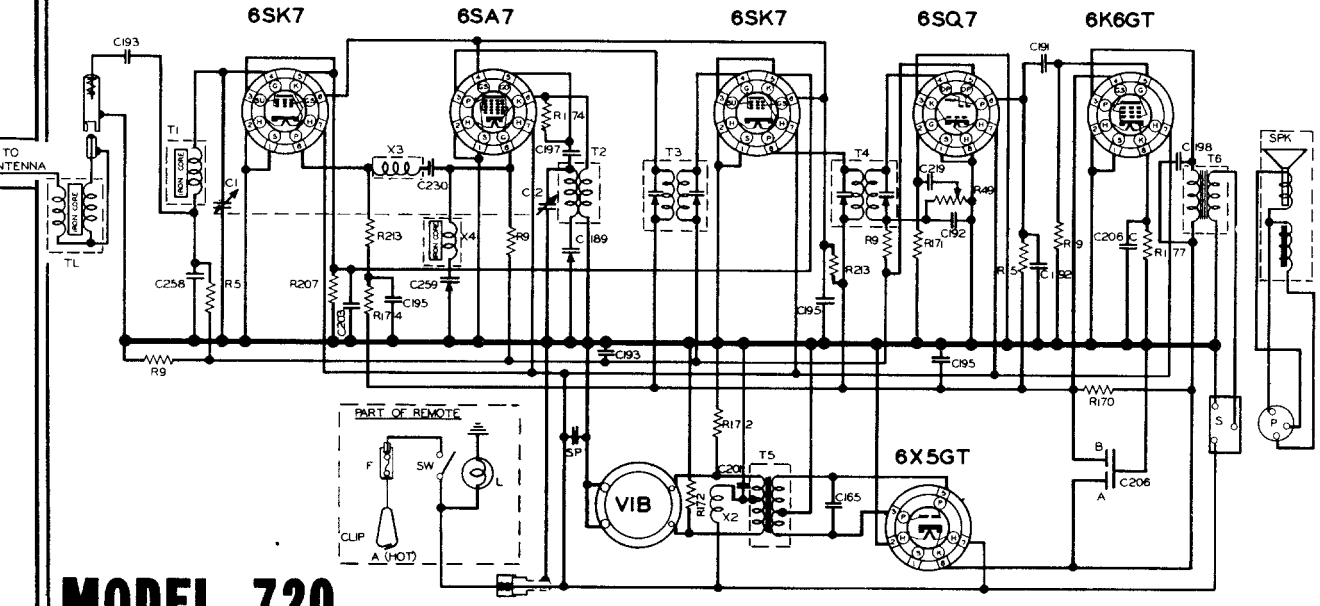

MODEL 720

RESISTORS			
R	OHMS	W	PART NO
5	500 K	1/4	17-2070
9	1 M	1/4	17-2080
49	500 K	V.C	17-14538
170	100	1/4	17-14289
171	15 M	1/4	17-14288
172	100	1/4	17-14289
174	20 K	1/4	17-14291
177	850	1/4	17-14298
213	10 K	1/4	17-14369
207	300	1/4	17-14361

CONDENSERS			
C	CAPACITY	VOLT	PART NO
1	TWO-GANG		17-16234
2	VARIABLE		
185	.005	1200	17-14230
189	400-1500MMFD	PAD	17-14268
191	.01	400	17-14272
192	.00025	600	17-14273
193	.05	200	17-14274
195	.05	400	17-14276
219	.003	200	17-14312
203	.2	200	17-16242
208A	10 MFD.	300	
208B	10 MFD	300	17-14297
208C	20 MFD.	15	
230	.0005	400	17-14326
238	.004	600	17-14381
201	.5	150	17-14265
239	4-40 MMFD	PAD	17-14383
197	.0001	600	17-14275
198	.005	400	17-14279

CHOKES & TRANSFORMERS		
T-X	TYPE	PART NO
1	ANTENNA COIL	00-16239
2	OSCILLATOR	00-17000
3	FIRST I.F. COIL	00-17007
4	SECOND I.F. COIL	00-17008
5	POWER TRANSFORMER	00-16265
6	OUTPUT TRANSFORMER	00-16288
X	CHOKES	
2	SUPPRESSION CHOKE	29-13459
3	TRAP CHOKE	00-16952
4	TRAP CHOKE	00-16952

MISCELLANEOUS UNITS		
SYMBOL	DESCRIPTION	PART NO
F	FUSE - 20 AMPS.	17-2226
L	DIAL LIGHT BULB - MAZDA NO. 51	17-13904
P	SPEAKER PLUG	17-4760
S	SPEAKER SOCKET	17-13631
SPK	SPEAKER ASSEMBLY	17-16517
SW	POWER SWITCH	—
TL	TRANSMISSION LINE	00-16989
SP	SPARK PLATE	
VIB	VIBRATOR	17-14747

I.F. PEAK 455 K.C.
FREQUENCY RANGE 1575 TO 540 K.C.
NOBLITT-SPARKS INDUSTRIES, INC.
COLUMBUS, INDIANA

COMPILED BY M. N. BEITMAN, SUPREME PUBLICATIONS

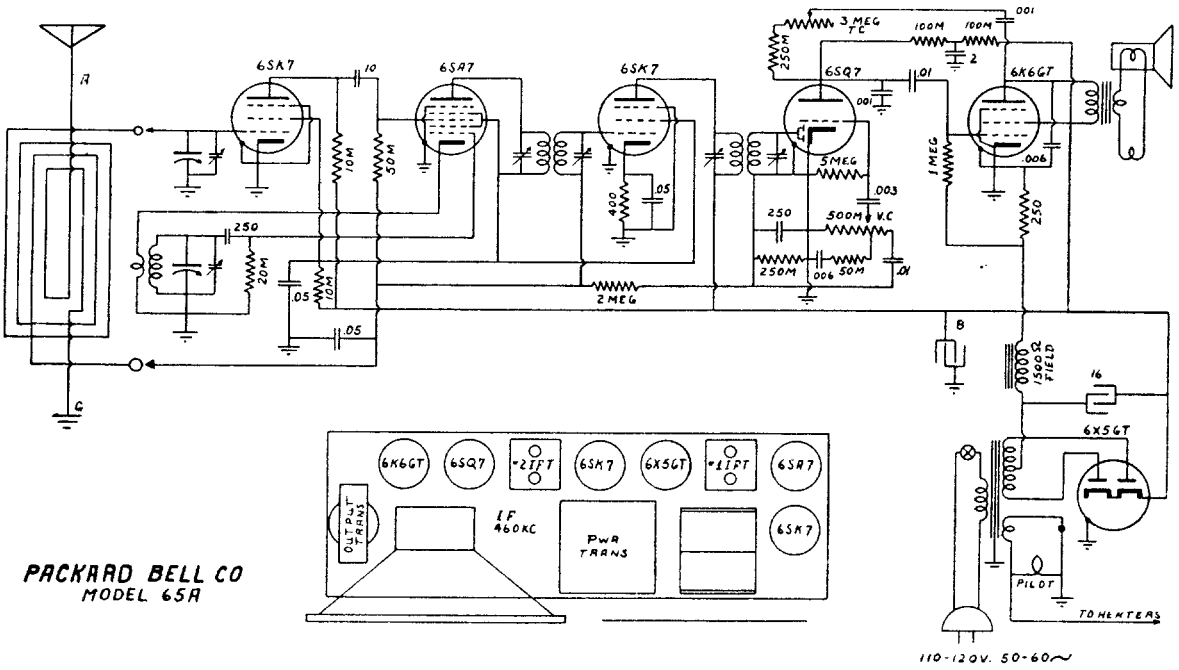

PACKARD BELL CO
MODEL 65A

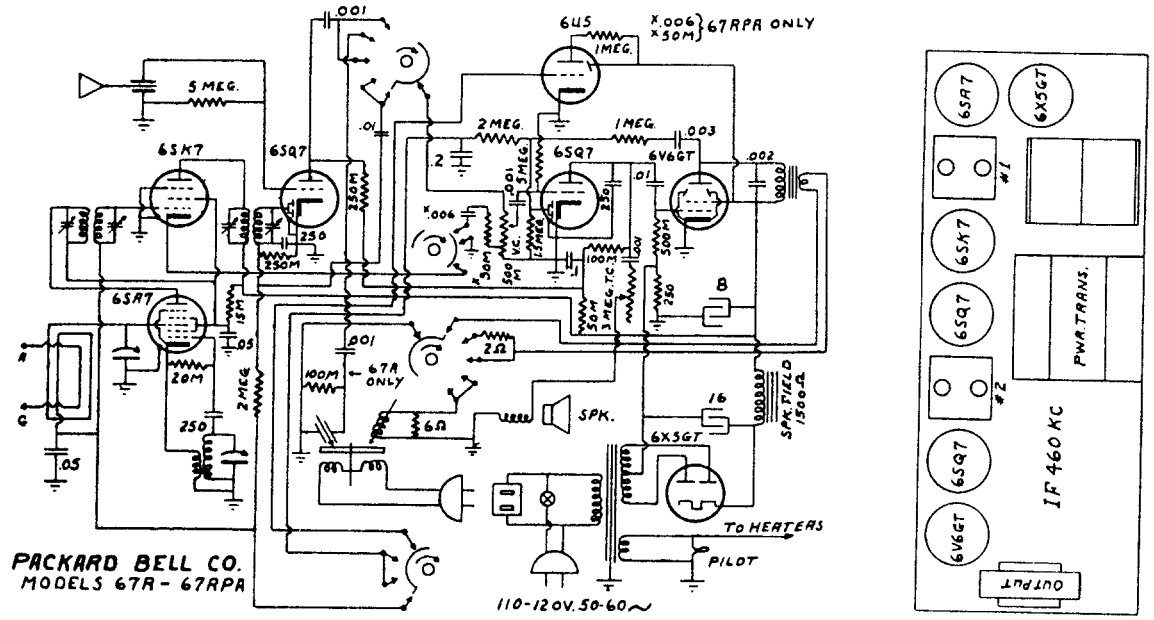

PACKARD BELL CO.
MODELS 67A - 67RPA

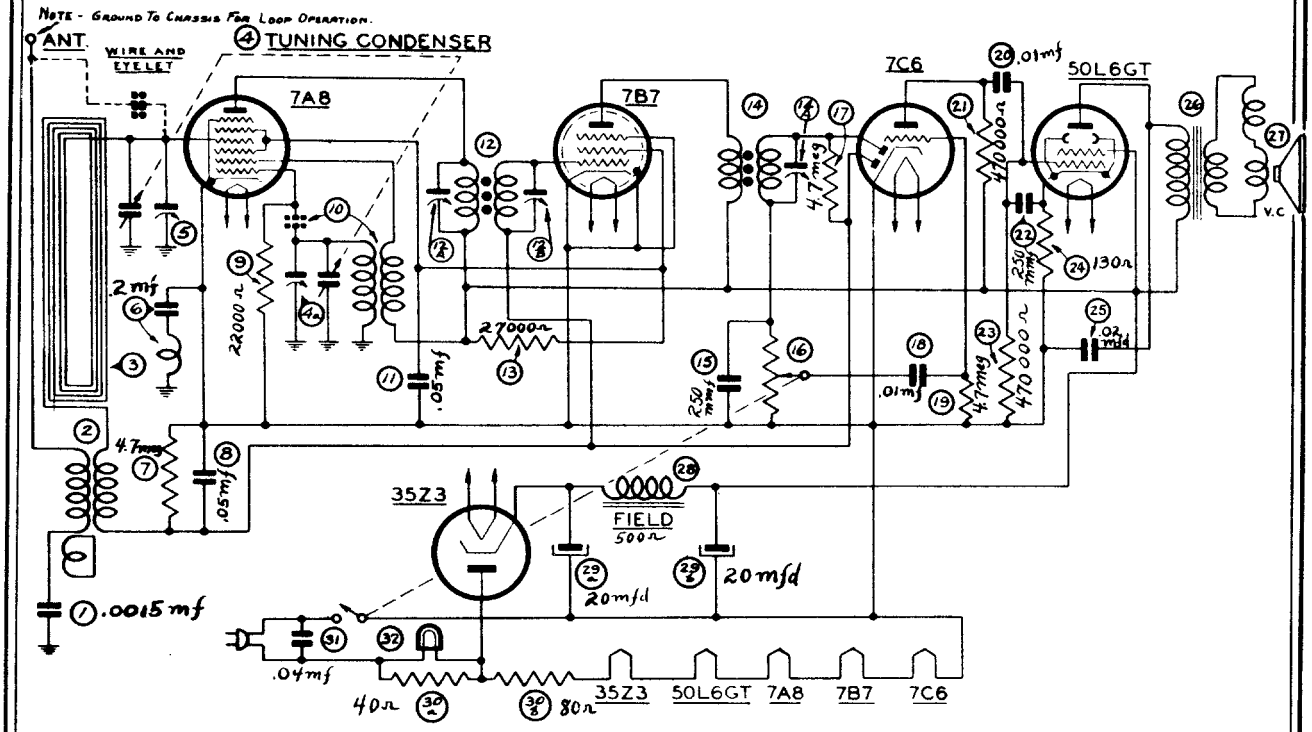

SCHEMATIC DIAGRAM — PT-42, PT-44

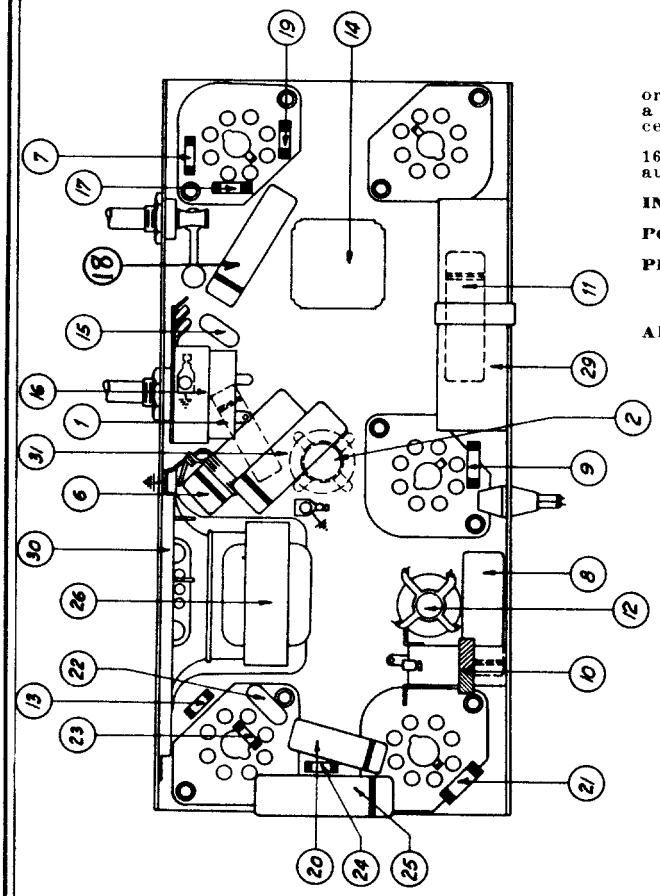

Models PT-30, PT-42, PT-44, PT-49

Models PT-30, PT-42, PT-44, and PT-49 are five (5) tube A. C. or D. C. operated Super-heterodyne compact radios employing a built-in loop aerial. These Models are similar with the exception of the cabinets, chassis and speaker size.

In addition each Model includes a tuning band from 540 to 1600 K. C., Automatic Volume Control; beam power pentode audio output stage and Philco Loktal tubes.

INTERMEDIATE FREQUENCY: 455 K. C.

POWER SUPPLY: 115 Volts, A. C. or D. C.

PHILCO TUBES: 7A8, converter; 7B7, I. F. Amplifier; 7C6, 2nd detector, A. V. C., 1st audio; 50L6GT, beam power audio output and a 35Z3, rectifier.

AERIAL AND GROUND: Under ordinary operating conditions an outside aerial or ground is not required. In some locations, however, such as steel reinforced buildings and other shielded areas, an outside aerial should be used for maximum performance. For this purpose an outside aerial connection is located on the rear lower left corner of the chassis. Simply remove the lug from under the screw and attach the aerial lead to the lug.

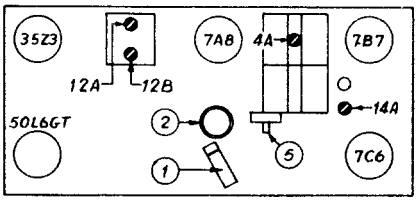

PHILCO

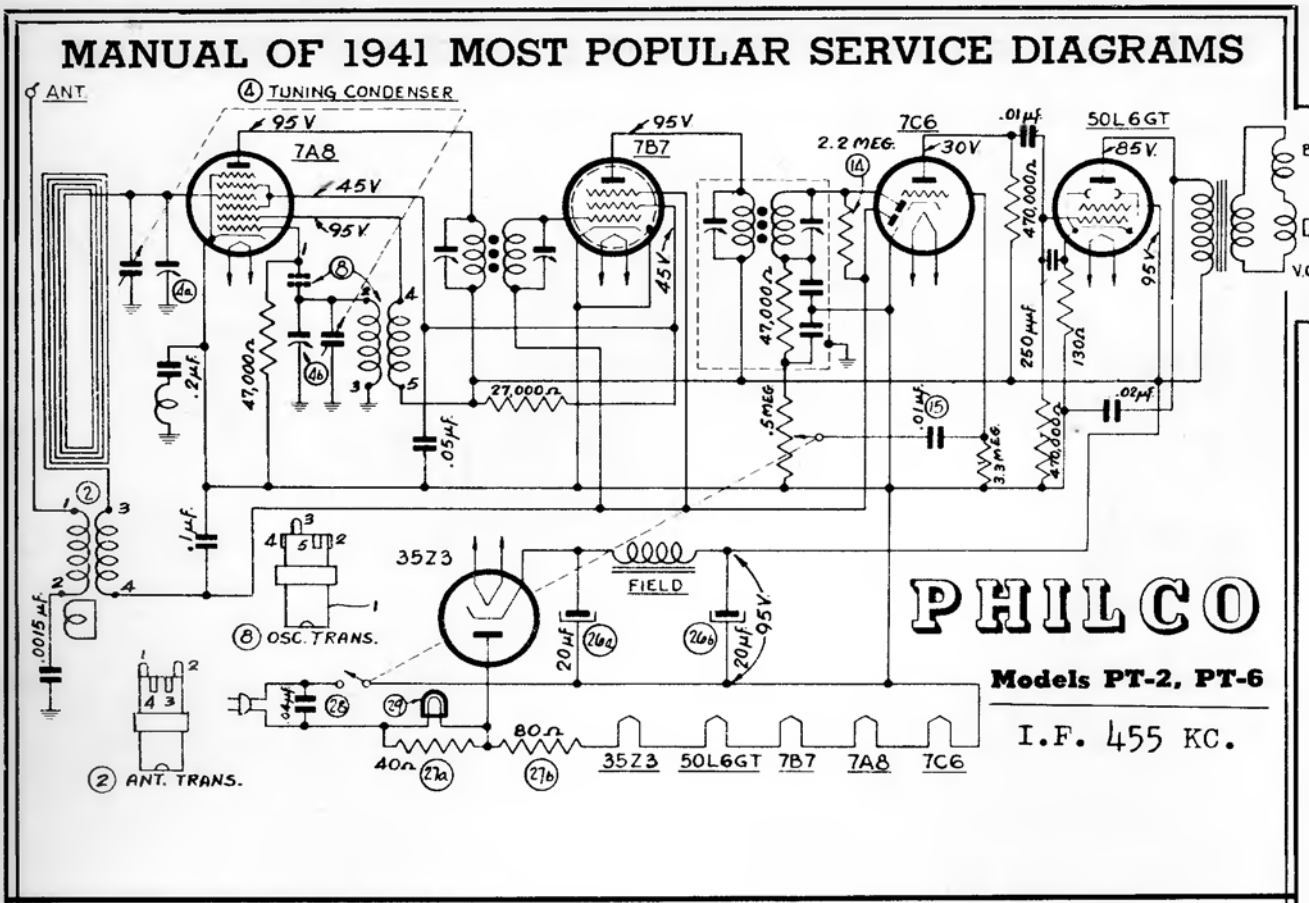

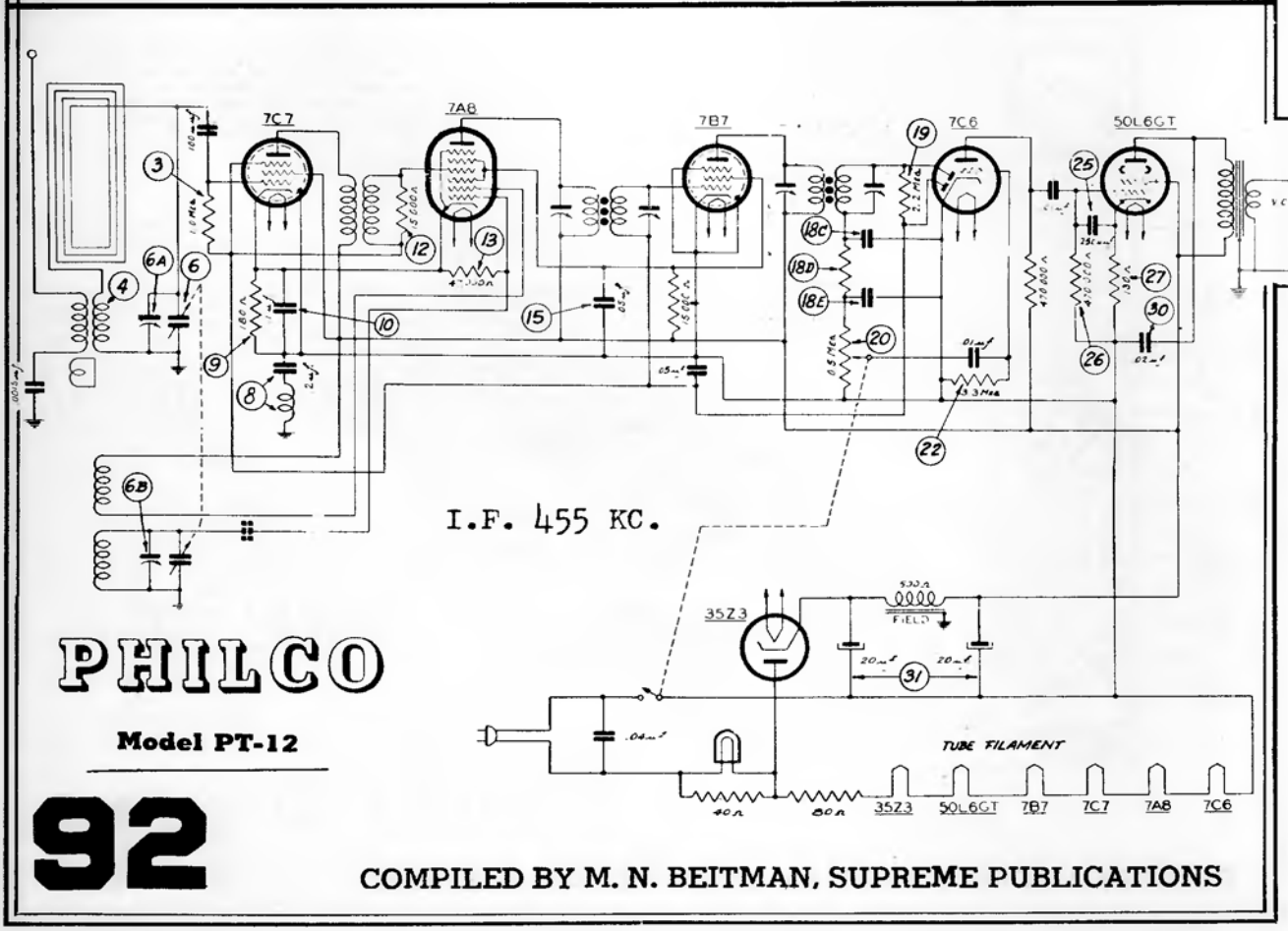

COMPILED BY M. N. BEITMAN, SUPREME PUBLICATIONS

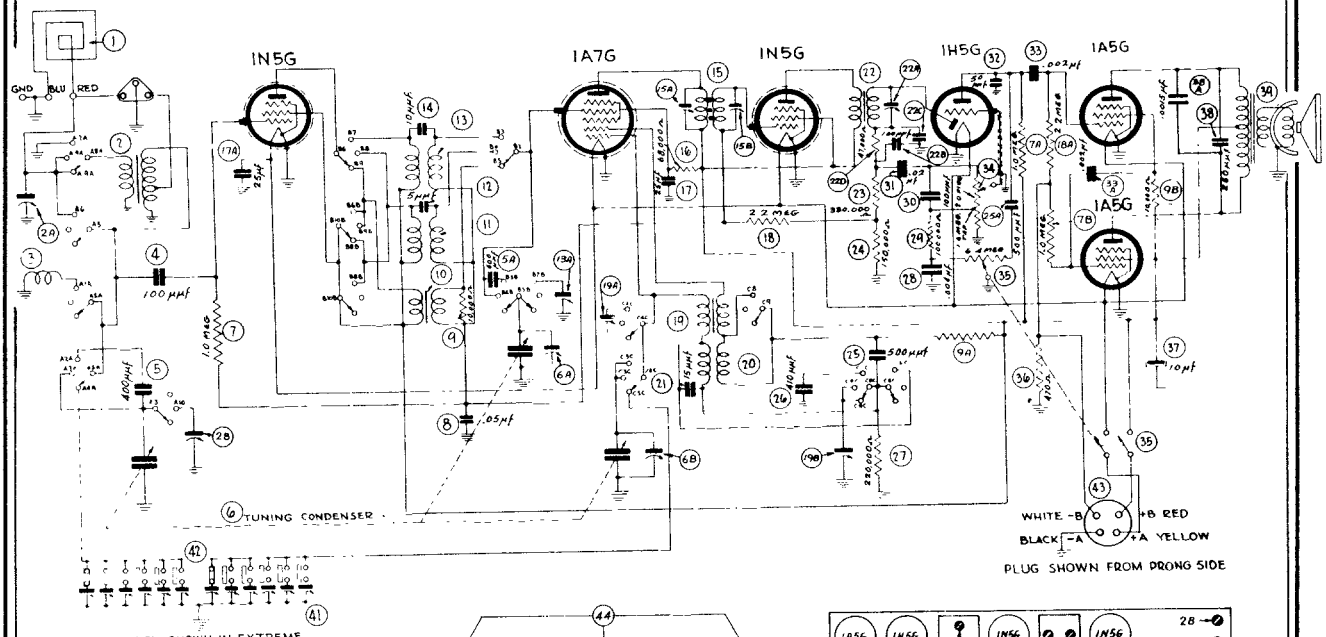

WAVE SWITCH SHOWN IN EXTREME COUNTER CLOCKWISE, PUSH BUTTON POSITION

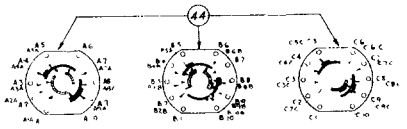

SWITCHES SHOWN FROM REAR OF CHASSIS BOTTOM VIEW IN POSITION No. 1 (PUSH BUTTON) LETTERS INDICATE POSITION OF SWITCH WAFERS FROM REAR OF CHASSIS BOTTOM VIEW SHADED RING IS AT FRONT OF SWITCH WAFER. SOLID RING IS AT REAR OF SWITCH WAFER.

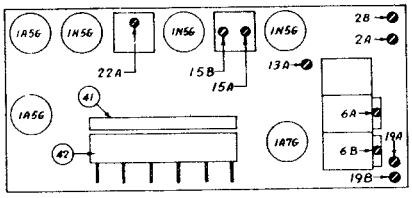

I.F. = 455 KC.

Operations in Order	SIGNAL GENERATOR			RECEIVER		
	Output Connections	Dummy Aerial	Dial Setting	Dial Setting	Control Settings	Adjust Compensators
1	1A7G (Grid)	.1 mmfd.	455 K. C.	540 K. C.	Vol. Max. Range Switch Brdcst.	15A, 15B 22A
2	Aerial Connection Receiver	225 mmfd.	1500 K. C.	1500 K. C.	Vol. Max. Range Switch Brdcst.	Osc., R. F., aerial 6B, 6A, 2B
3	Aerial Connection Receiver	225 mmfd.	580 K. C.	580 K. C.	Vol. Max. Range Switch Brdcst.	19B
4	Aerial Connection Receiver	Recheck Operation No. 2				
5	Aerial Connection Receiver	400 Ohms	12 M. C.	12 M. C.	Range Switch S. W.	Osc., R. F., Ant. 19A, 13A, 2A

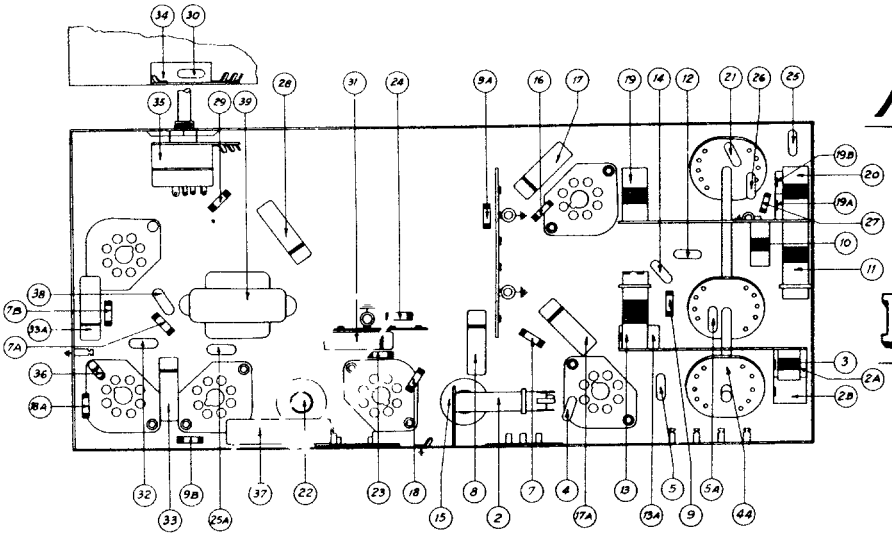

PART LOCATIONS, UNDERSIDE OF CHASSIS

Model 41-110

PHILCO

93

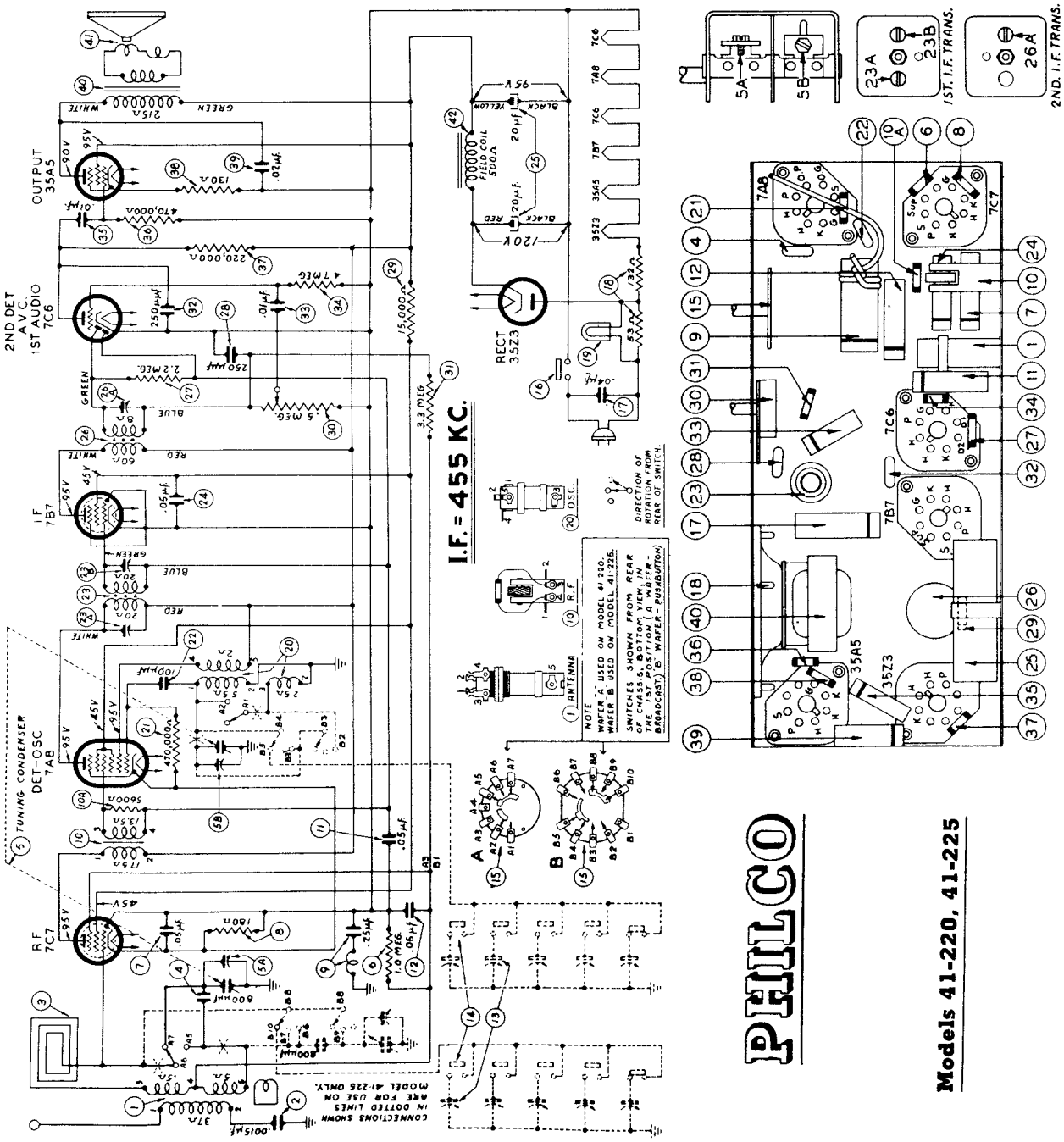

Operations in Order	SIGNAL GENERATOR		RECEIVER		
	Output Connections to Receiver	Dial Setting	Dial Setting	Control Setting	Adjust Compensators in Order
1	Ant. Section of Tuning Cond.	455 K. C.	540 K. C. Tuning Cond. Closed	Vol. Max. Range Switch "Brdcst"	26A, 23B, 23A
2	Loop—See above Instructions	1600 K. C.	1600 K. C.	Vol. Max. Range Switch "Brdcst"	5B Tuning Condenser
3	Loop—See above Instructions	1500 K. C.	1500 K. C.	Vol. Max. Range Switch "Brdcst"	5A Tuning Condenser

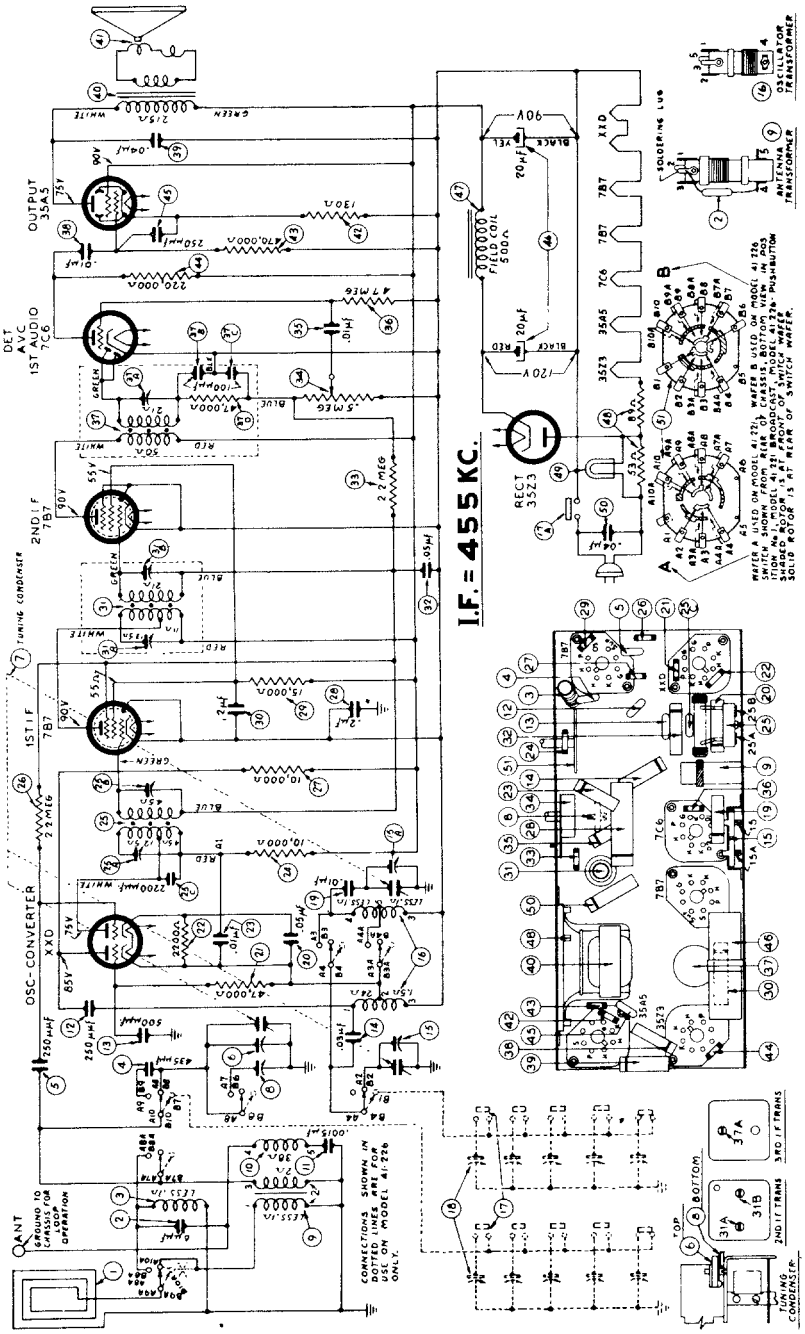

Philco Radio, Models 41-221, 41-226

CONNECTING ALIGNING INSTRUMENTS

Audio Output Meter: If this type of aligning meter is used, connect it to the voice coil terminals of the speaker or from the plate of the 35A5 tube to the chassis. Adjust the meter for the 0 to 10 volt scale.

Vacuum Tube Voltmeter: To use the vacuum tube voltmeter as an aligning indicator, make the following connections: Attach the negative (—) terminal of the voltmeter to any point in the circuit where the A. V. C. voltage can be obtained. Connect the positive (+) terminal of the vacuum tube voltmeter to the chassis.

Signal Generator: When adjusting the I. F. padders, the high side of the signal generator is connected through a .1 mfd. condenser to the antenna section of the tuning condenser. Connect the ground or low side of the generator to the chassis.

When aligning the R. F. padders a loop is made from a few turns of wire and connected to the signal generator output terminals; the signal generator is then placed close to the loop of the radio.

The receiver can be adjusted in the cabinet or removed from the cabinet.

When adjusting the radio outside the cabinet the loop aerial should be placed in approximately the same position around or near the chassis as when assembled.

After connecting the aligning instruments adjust the compensators as shown in the tabulation below. Locations of the compensators are shown in the schematic diagram.

If the indicating meter pointer goes off scale when adjusting the compensators, reduce the strength of the signal from the generator.

Operations in Order	SIGNAL GENERATOR		RECEIVER		
	Output Connections to Receiver	Dial Setting	Dial Setting	Control Setting	Adjust Compensators in Order
1	Ant. Section of tuning	455 K. C.	540 K. C. Tuning Cond. Closed	Vol Max. Range Switch Brdcst.	37A, 31A, 31B, 25A, 25B
2	Loop see above instructions	1600 K. C.	1600 K. C.	Vol. Max. Range Switch Brdcst.	15
3	Loop see above instructions	1500 K. C.	1500 K. C.	Vol. Max. Range Switch Brdcst.	6
4	Loop see above instructions	12 M. C.	12 M. C.	Range Switch "S. W."	15A, 8

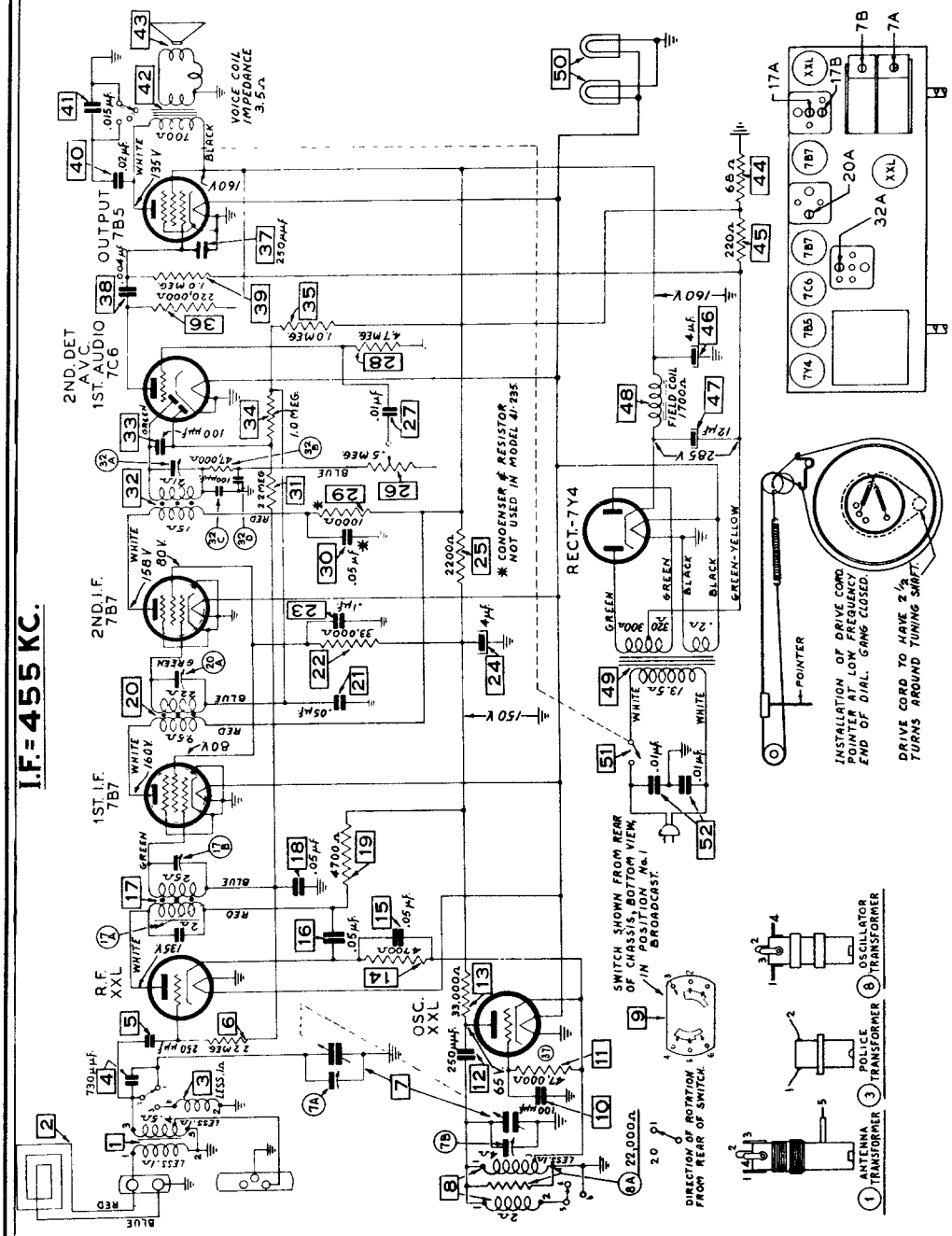

PHILCO Philadelphia, Pa.

Models 41-230; 41-235, Code 121

Operations in Order	SIGNAL GENERATOR		RECEIVER		
	Output Connections to Receiver	Dial Setting	Dial Setting	Control Setting	Adjust Compensators in Order
1	Ant. Section of Tuning Cond.	455 K. C.	540 K. C. Tuning Cond. Closed	Vol. Max. Range Switch "Brdcst"	32A, 20A 17B, 17A
2	Loop—See above Instructions	1600 K. C.	1600 K. C.	Vol. Max. Range Switch "Brdcst"	7B
3	Loop—See above Instructions	1500 K. C.	1500 K. C.	Vol. Max. Range Switch "Brdcst"	7A

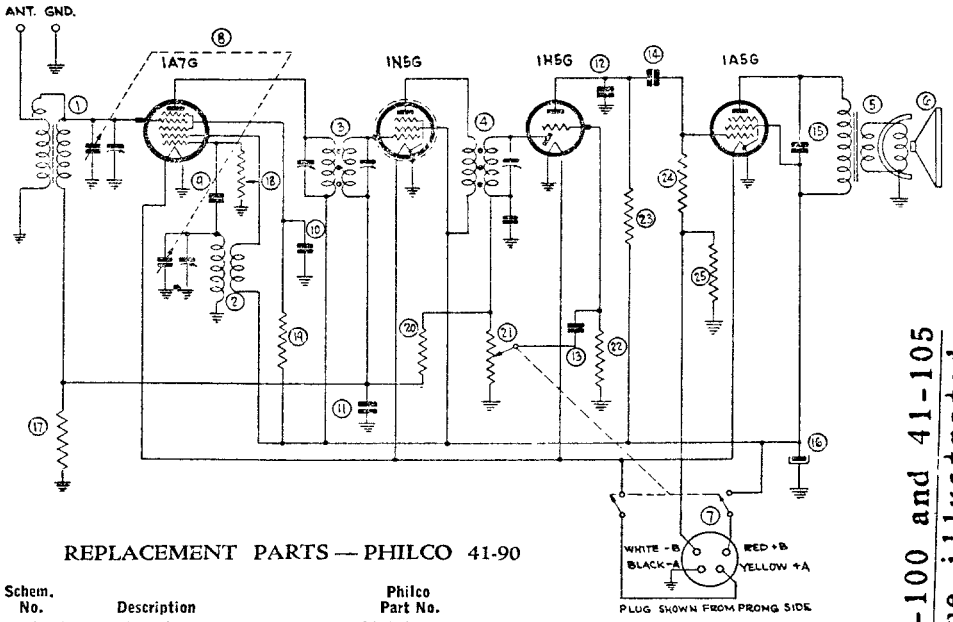

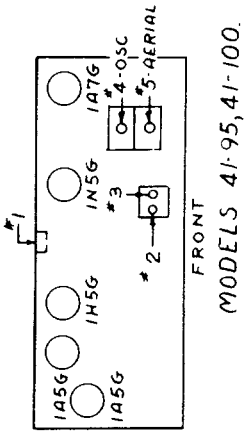

REPLACEMENT PARTS — PHILCO 41-90

Schem. No.	Description	Philco Part No.
1	Antenna Transformer	32-3490
2	Oscillator Transformer	32-3491
3	First I.F. Transformer	32-3492
4	Second I.F. Transformer	32-3199
5	Output Transformer	32-8100
6	Speaker	36-1507
7	Battery Cable	41-3505
8	Tuning Condenser	31-2485
9	Moulded Mica Condenser (100 mmf.)	60-110157
10	Tubular Condenser (.05 mf. 200 V)	30-4519
11	Tubular Condenser (.05 mf. 200 V)	30-4519
12	Moulded Mica Condenser (100 mmf.)	60-110157
13	Tubular Condenser (.004 mf. 400 V)	30-4578
14	Tubular Condenser (.01 mf. 400 V)	30-4572
15	Moulded Mica Condenser (500 mmf.)	60-150157
16	Electrolytic Condenser (10 mf. 150 V)	30-2396
17	Resistor (4.7 meg. ¼ watt)	33-547154
18	Resistor (220,000 ohms ¼ watt)	33-422154
19	Resistor (68,000 ohms ¼ watt)	33-368154
20	Resistor (10 meg. ¼ watt)	33-610154
21	Volume Control and "On-Off" Switch	33-5407
22	Resistor (4.7 meg. ¼ watt)	33-547154
23	Resistor (1.0 meg. ¼ watt)	33-510154
24	Resistor (2.2 meg. ¼ watt)	33-522154
25	Resistor (1000 ohms ½ watt)	33-210336

Philco Models 41-100 and 41-105 are similar to the illustrated circuits.

Models 41-90, 41-95, 41-100

Operations in Order	SIGNAL GENERATOR				RECEIVER		
	Output Connections	Dummy Antenna Note A	Dial Setting	Dial Setting	Controls	Adjust Compensators
1	1A7G (Grid)	.1 mfd.	455 K. C.	540 K. C.	Vol. Max.	1, 2, 3
2	Aerial Connection	225 mmfd.	1500 K. C.	1500 K. C.	Vol. Max.	4 Osc., 5 aerial

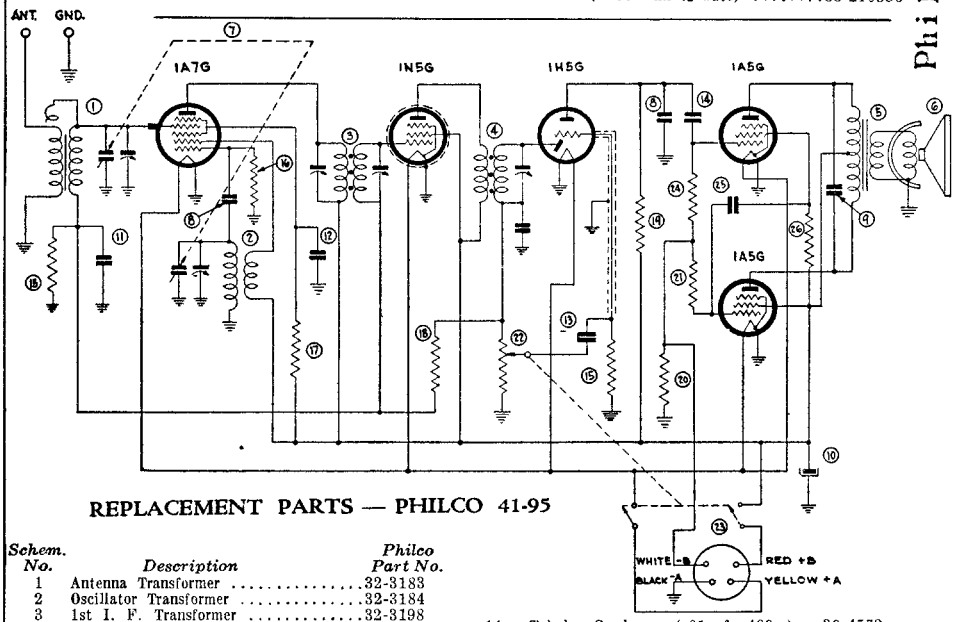

REPLACEMENT PARTS — PHILCO 41-95

Schem. No.	*Description*	*Philco Part No.*
1	Antenna Transformer	32-3183
2	Oscillator Transformer	32-3184
3	1st I. F. Transformer	32-3198
4	2nd I. F. Transformer	32-3199
5	Output Transformer	32-8107
6	5″ Speaker for Compact	36-1507
6A	8″ Speaker for Console	36-1477
7	Tuning Condenser	31-2457
8	Moulded Mica Condenser (100 mmf.)	60-110157
9	Moulded Mica Condenser (250 mmf.)	60-125157
10	Electrolytic Condenser (10 mf., 150 v)	30-2396
11	Tubular Condenser (.05 mf., 200 v)	30-4519
12	Tubular Condenser (.05 mf., 200 v)	30-4444
13	Tubular Condenser (.004 mf., 400 v)	30-4578
14	Tubular Condenser (.01 mf., 400 v)	30-4572
15	Resistor (4.7 Meg., ¼ watt)	33-547154
16	Resistor (220,000 ohms, ¼ watt)	33-422154
17	Resistor (68,000 ohms, ¼ watt)	33-368154
18	Resistor (10 Meg., ¼ watt)	33-610154
19	Resistor (1 Meg., ¼ watt)	33-510154
20	Resistor (680 ohms, ½ watt)	33-168326
21	Resistor (2.2 Meg., ¼ watt)	33-522154
24	Resistor (2.2 Meg., ¼ watt)	33-522154
25	Tubular Condenser (.01 mf., 400 v)	30-4572
26	Resistor (10,000 ohms, ¼ watt)	33-310154

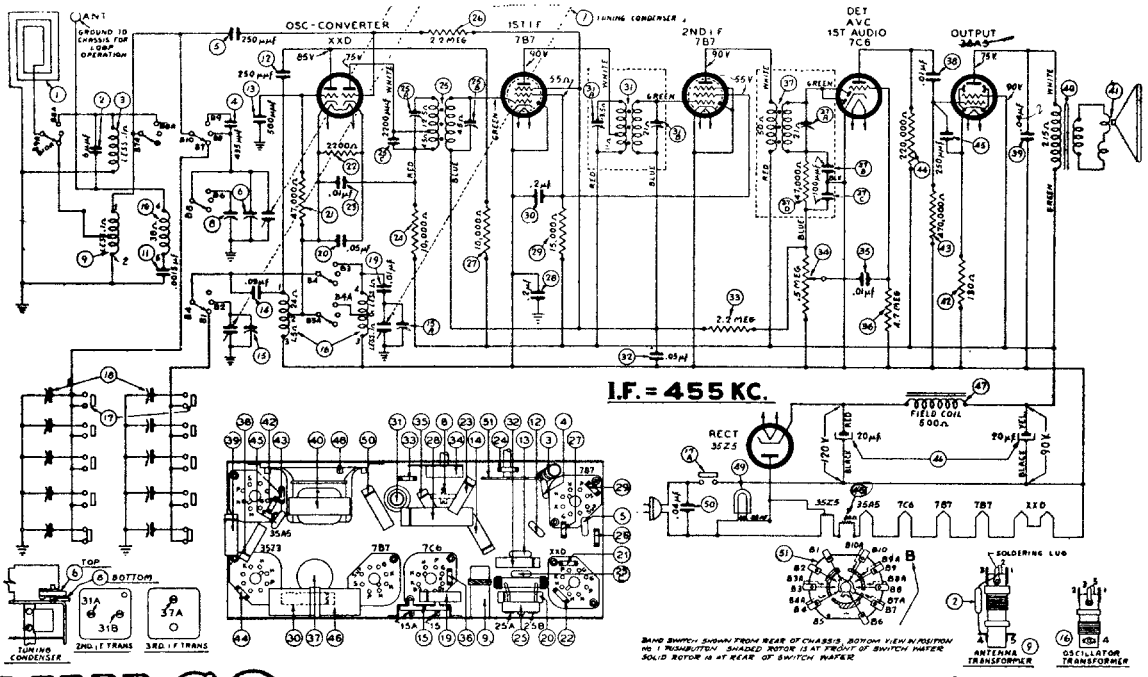

PHILCO

Models 41-231, Code 121

SCHEMATIC DIAGRAM — MODEL 41-246, CODE 121

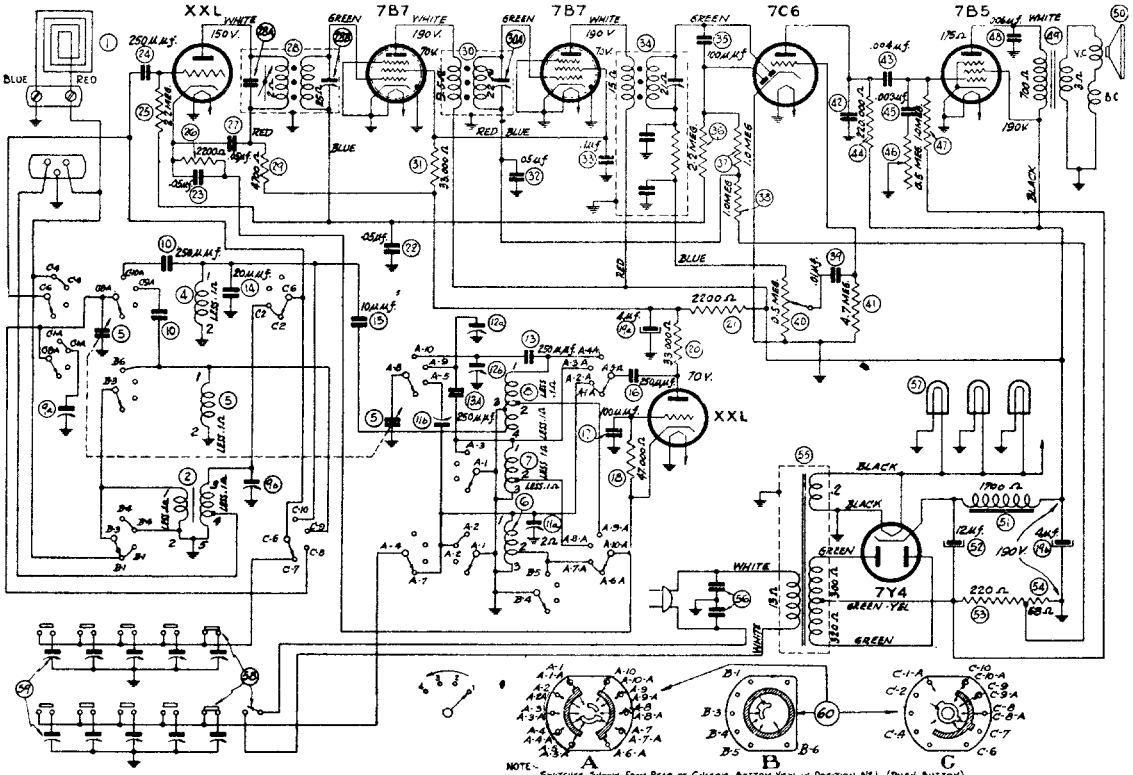

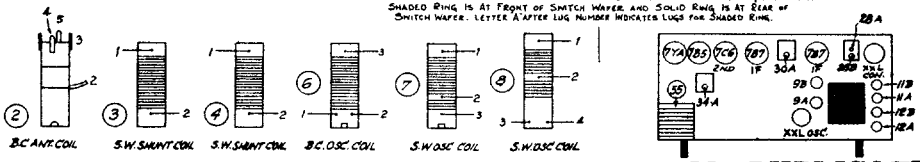

NOTE:- SWITCHES SHOWN FROM REAR OF CHASSIS, BOTTOM VIEW, IN POSITION Nº 1 (PUSH BUTTON). LETTERS INDICATE POSITION OF SWITCH WAFERS FROM FRONT OF CHASSIS, BOTTOM VIEW. SHADED RING IS AT FRONT OF SWITCH WAFER, AND SOLID RING IS AT REAR OF SWITCH WAFER. LETTER A AFTER LUG NUMBER INDICATES LUGS FOR SHADED RING.

Models 41-250, 41-255; Code 121

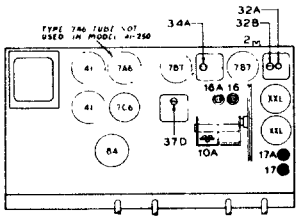

PHILCO

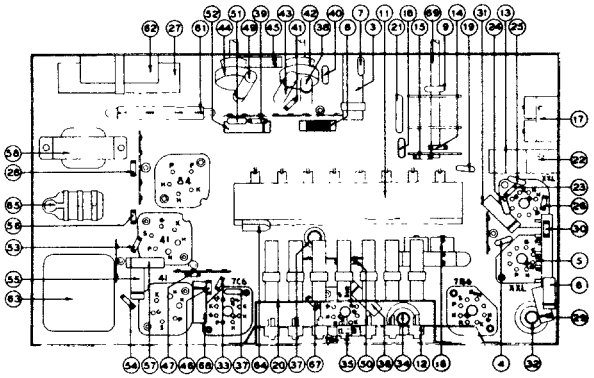

LOCATIONS OF PARTS AND TUBES
UNDERSIDE OF CHASSIS — MODEL 41-250

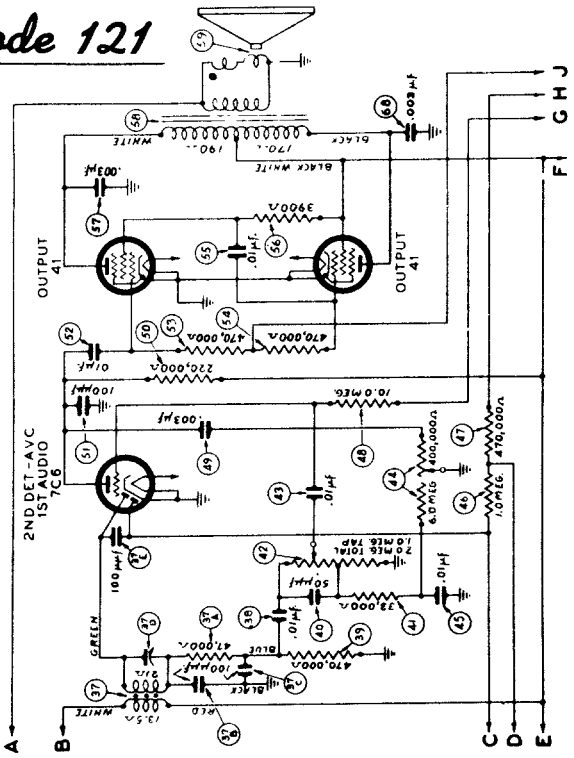

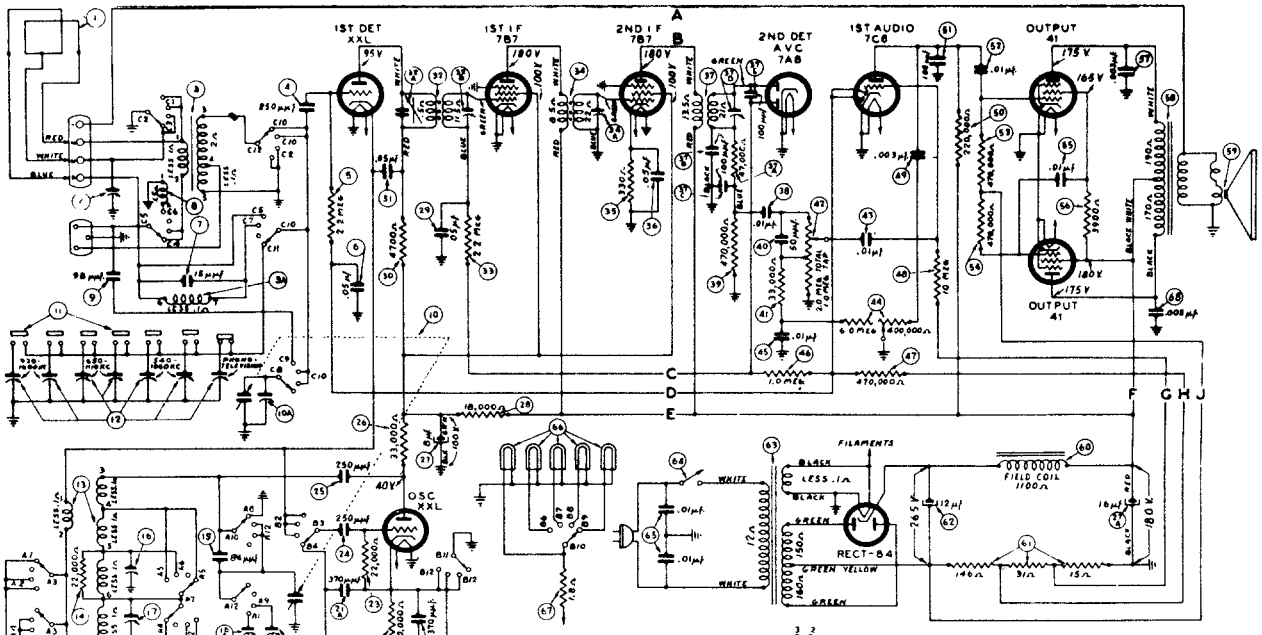

I.F.=455 KC.

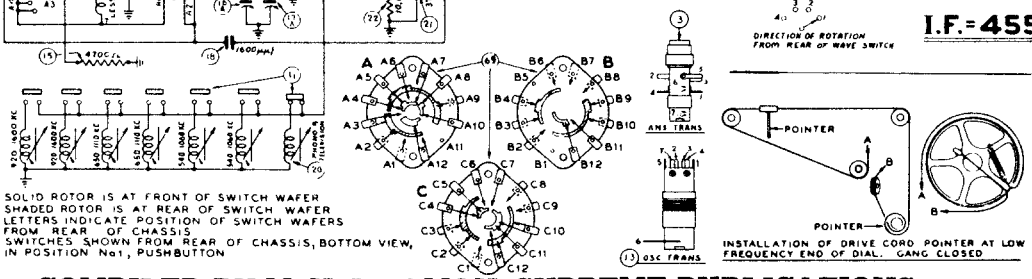

SOLID ROTOR IS AT FRONT OF SWITCH WAFER
SHADED ROTOR IS AT REAR OF SWITCH WAFER
LETTERS INDICATE POSITION OF SWITCH WAFERS FROM REAR OF CHASSIS
SWITCHES SHOWN FROM REAR OF CHASSIS, BOTTOM VIEW, IN POSITION No1, PUSHBUTTON

INSTALLATION OF DRIVE CORD POINTER AT LOW FREQUENCY END OF DIAL. GANG CLOSED

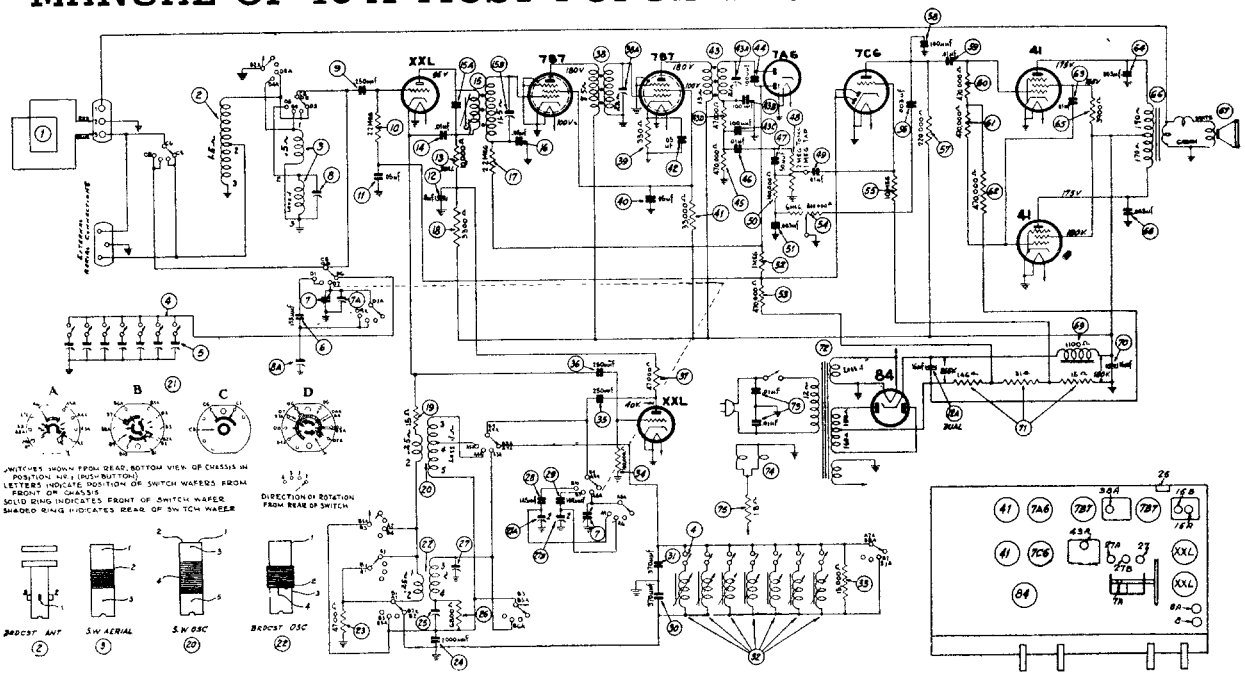

Operations in Order	SIGNAL GENERATOR		RECEIVER		
	Output Connections to Receiver	Dial Setting	Dial Setting	Control Settings	Adjust Compensators in Order
1	High side to No. 3 terminal loop panel	455 K. C.	580 K. C.	Vol. Max. Range Switch "S. W." Positions	15A, 15B 38A, 43A
2	Use loop on generator	1500 K. C.	1500 K. C.	Vol. Max. Range Switch Broadcast	27, 7A
3	Use loop on generator	580 K. C.	580 K. C.	Vol. Max. Range Switch Broadcast	25
4	Use loop on generator	Perform operation No. 2 again			
5	Use loop on generator	12 M. C.	12 M. C.	Range Switch "SW-1"	27B, 8A
6	Use loop on generator	18 M. C.	18 M. C.	Range Switch "SW-2"	27A, 8

ELECTRIC PUSH-BUTTON TUNING: The automatic tuning mechanism of each model is identical and consists of eight (8) electric tuning push-buttons, seven (7) of the push-buttons are used for selecting broadcast stations, and one as the power control (On-Off switch).

When aligning the R. F. padders a loop is made from a few turns of wire and connected to the signal generator output terminals; the loop is then placed two or three feet from the loop in the cabinet. Do not remove the receiving loop from the cabinet. It is necessary when adjusting the padders, that the receiver be left in the cabinet.

After connecting the aligning indicator, adjust the compensators in the order shown in the tabulation below. Locations of the compensators are shown on the schematic diagram. If the output meter pointer goes off scale when adjusting the compensators, reduce the strength of the signal from the generator.

NOTE A—DIAL CALIBRATION: In order to adjust the receiver correctly, the dial must be aligned to track properly with the tuning condenser. To adjust the dial, proceed as follows: With the tuning condenser closed (maximum capacity), set the dial pointer on the extreme left index line at the low frequency end of the broadcast scale. The arrangement of the drive cable in this position is shown in the schematic.

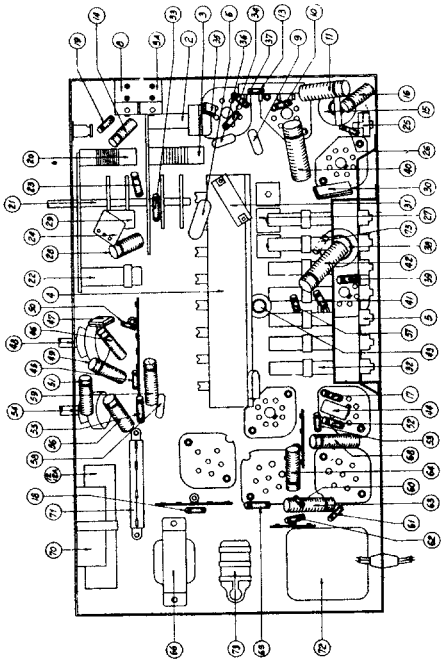

PART LOCATIONS — UNDERSIDE OF CHASSIS

Model 41-256, Code 121

PHILCO

MANUAL OF 1941 MOST POPULAR SERVICE DIAGRAMS

Operations in Order	SIGNAL GENERATOR		RECEIVER		
	Output Connections to Receiver	Dial Setting	Dial Setting	Control Settings	Adjust Compensators in order
1	Ant. Section of Tuning Cond.	455 K. C.	540 K. C. Tuning Cond. Closed	Vol Max. Range Switch Brdcst.	16A, 16B, 22A, 22B, 25A
2	Loop see above instructions	1600 K. C.	1600 K. C.	Vol Max. Range Switch Brdcst.	6B Tuning Condenser
3	Loop see above instructions	1500 K. C.	1500 K. C.	Vol Max. Range Switch Brdcst.	6A Tuning Condenser

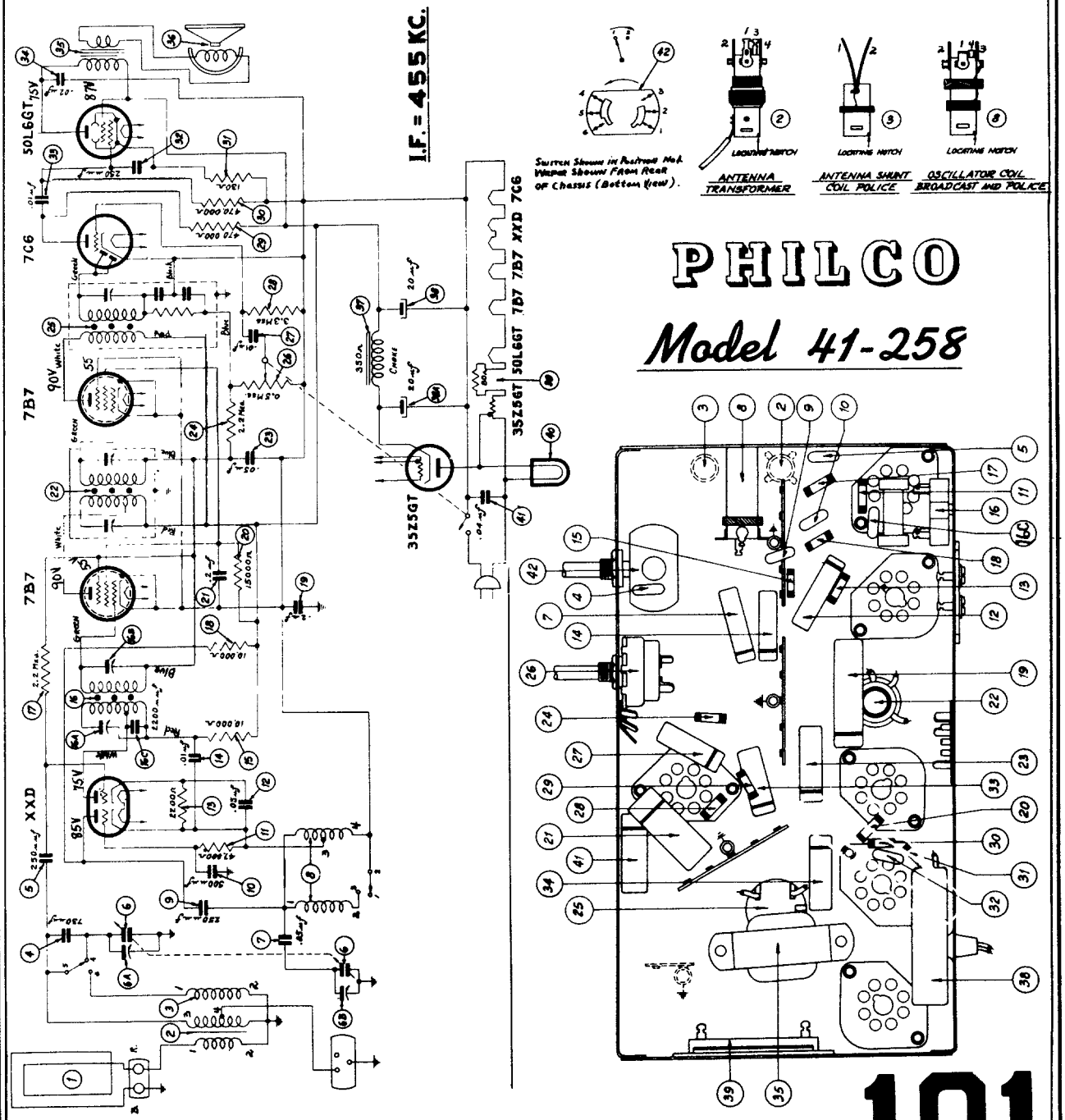

COMPILED BY M. N. BEITMAN, SUPREME PUBLICATIONS

PHILCO *Models 41-260; 41-265*

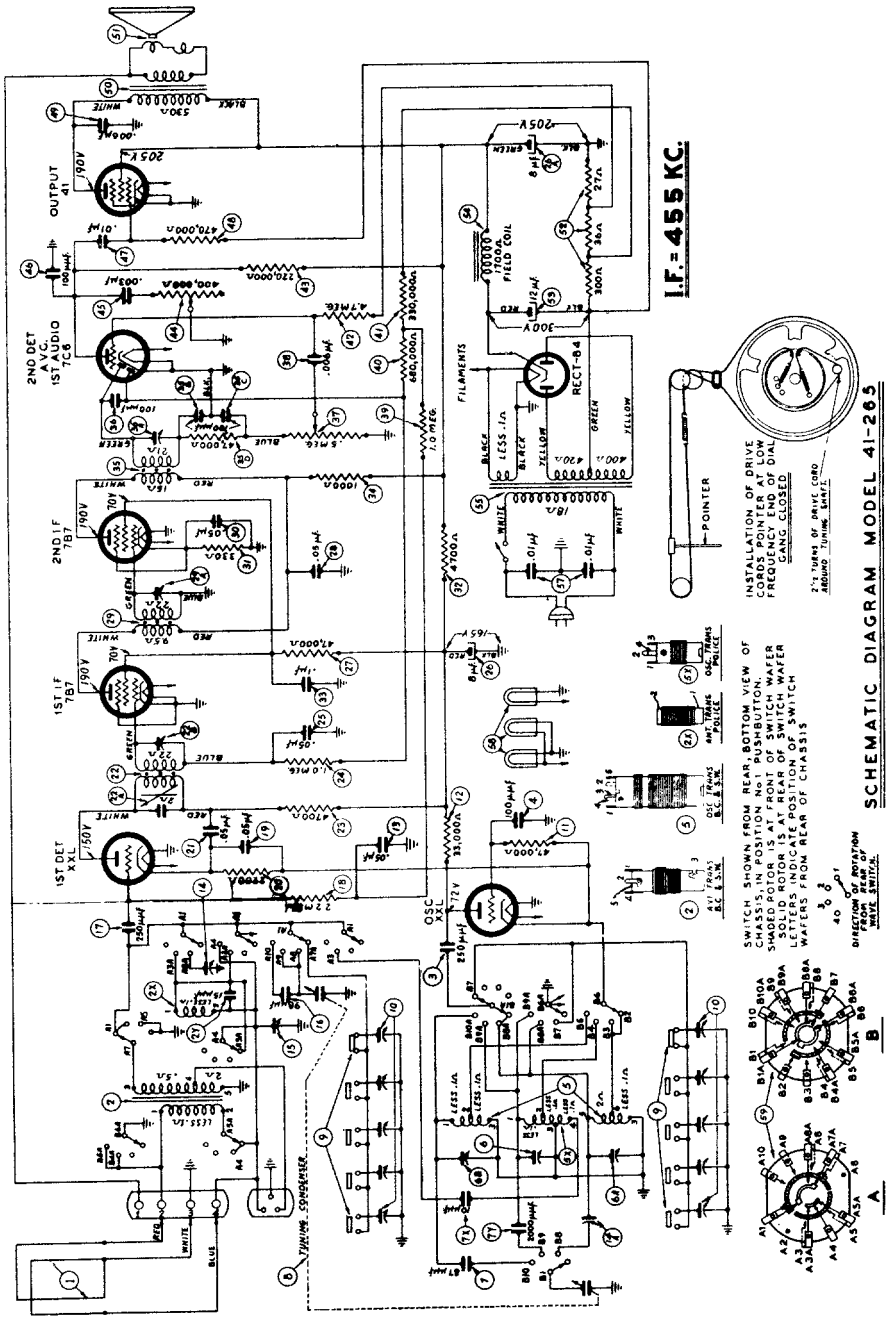

	Ant. Section of Tuning Cond.	455 K. C.	Tuning Cond. Closed	Vol. Max. Range Switch "Brdcst"	35A, 29A, 22A, 22B
2	Loop to Radio Loop See Sig. Gen. Above	1720 K. C.	1720 K. C.	Vol. Max. Range Switch "Brdcst"	6A
3	Loop to Radio Loop See Sig. Gen. Above	1500 K. C.	1500 K. C.	Vol. Max. Range Switch "Brdcst"	14
4	Loop to Radio Loop See Sig. Gen. Above	580 K. C.	580 K. C.	Vol. Max. Range Switch "Brdcst"	14A
5	Loop to Radio Loop See Sig. Gen. Above	6 M. C.	6 M. C.	Range Switch Police	6
6	Loop to Radio Loop See Sig. Gen. Above	12 M. C.	12 M. C.	Range Switch S. W.	6B, 15

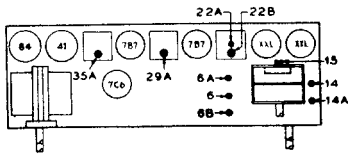

Models 41-260 and 41-265 are seven (7) tube alternating current (A. C.) operated superheterodyne radios incorporating electric push button in addition to manual tuning — and the new Philco built-in American and overseas loop aerial system. These models are also designed to receive the sound of a television program tuned in by special type Philco Television Radios.

In general, these models are similar with the exception of the tuning ranges and cabinet design. Model 41-260 has two (2) tuning ranges covering 540 to 1720 K. C. and 9.0 to 12.0 M. C. Model 41-265 consists of three (3) tuning ranges covering 540 to 1720 K. C., 2.0 to 7.0 M. C. and 9.0 to 12 M. C.

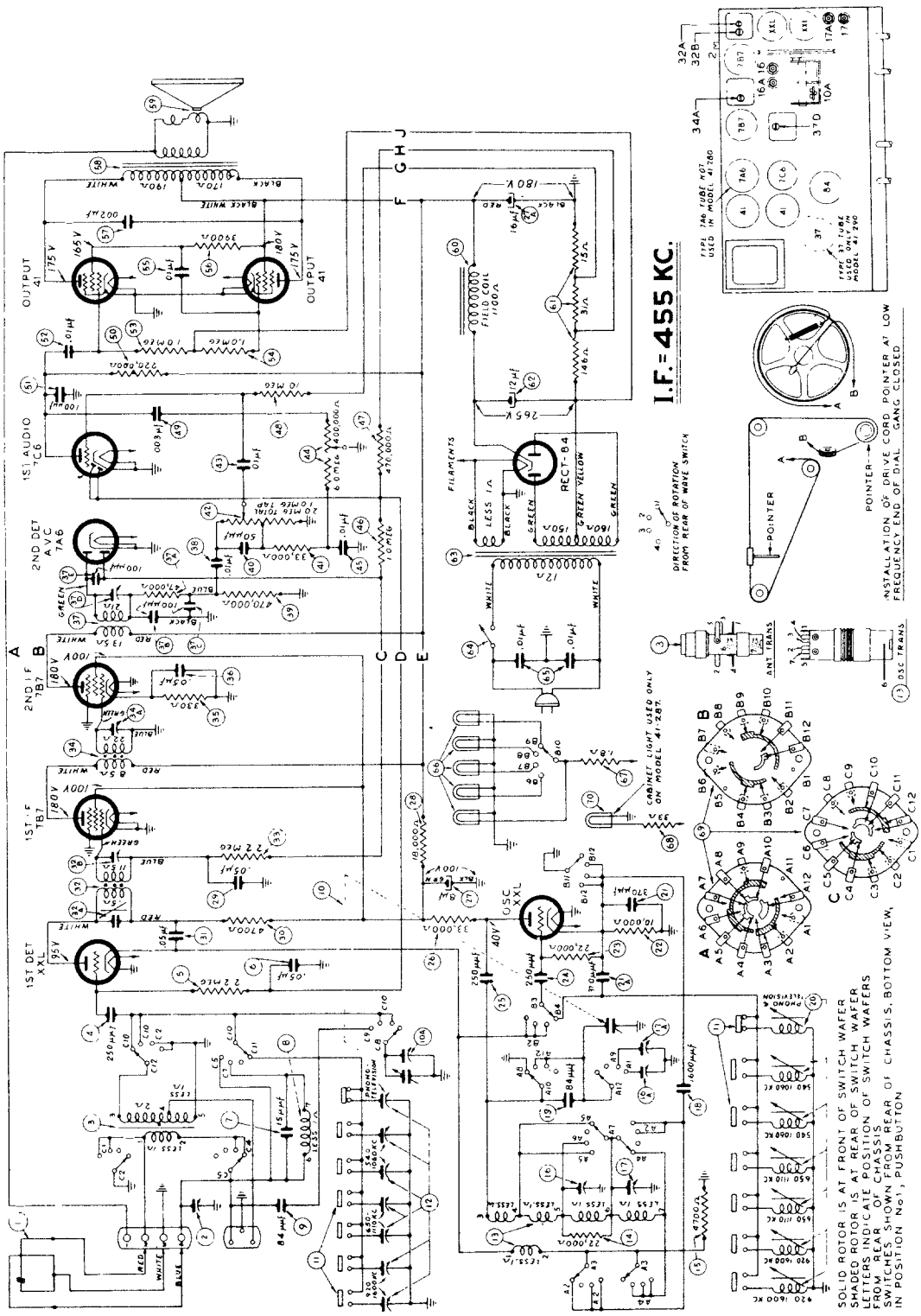

SCHEMATIC DIAGRAM — MODELS 41-280, 41-285, 41-287, 41-290

The above diagram is the complete electrical circuit for the Models 41-285, 41-287. The same general circuit is also used in Models 41-280 and 41-290, with the exception of the 2nd detector, 1st audio A. V. C. wiring, Model 41-280 and the audio circuit, Model 41-290.

Operations in Order	SIGNAL GENERATOR: Output Connections to Receiver	SIGNAL GENERATOR: Dial Setting	RECEIVER: Dial Setting	RECEIVER: Control Settings	RECEIVER: Adjust Compensators in order	SPECIAL INSTRUCTIONS
1	High side to No. 4 terminal loop panel.	455 K. C.	580 K. C.	Vol. Max. Range Switch "S. W." Positions	32A, 32B 34A, 37D	
2	Use loop on generator	1500 K. C.	1500 K. C.	Vol. Max. Range Switch Broadcast	16, 10	Note A
3	Use loop on generator	580 K. C.	580 K. C.	Vol. Max. Range Switch Broadcast	17	Roll Tuning Condensers Note B
4	Use loop on generator	Perform operation No. 2 again				
5	Use loop on generator	6 M. C.	6 M. C.	Range Switch "Police"	16A	
6	Use loop on generator	12 M. C.	12 M. C.	Range Switch "S. W."	17A, 2	Note C

NOTE A — DIAL CALIBRATION: In order to adjust the receiver correctly, the dial must be aligned to track properly with the tuning condenser. To adjust the dial, proceed as follows: With the tuning condenser closed (maximum capacity), set the dial pointer on the extreme left index line at the low frequency end of the broadcast scale. The arrangement of the drive cable in this position is shown in the schematic.

NOTE B — When adjusting the low frequency compensator of Range One (Broadcast) or the aerial padders of the high frequency tuning range; the receiver Tuning Condenser must be adjusted (rolled) as follows: First tune the compensator for maximum output, then vary the tuning condenser of the receiver for maximum output. Now turn the compensator slightly to the right or left and again vary the receiver tuning condenser for maximum output. This procedure of first setting the compensator and then varying the tuning condenser is continued until maximum output reading is obtained.

NOTE C — To accurately adjust the high frequency oscillator compensator to the fundamental instead of the image signal, turn the oscillator compensator (17A) to the maximum capacity position (clockwise). From this position slowly turn the compensator counter-clockwise until a first peak is obtained on the output meter. Adjust the compensator for maximum output at this first peak.

If the above procedure is correctly performed, the image signal will be found (much weaker) by turning the receiver dial 910 K. C. above the frequency being used on any high frequency range.

The aerial padder (2) must be adjusted to maximum by rolling the tuning condenser. If two signal peaks occur when turning the padder, adjust to maximum output on the second signal peak from the tight position (screw all the way down) of the padder.

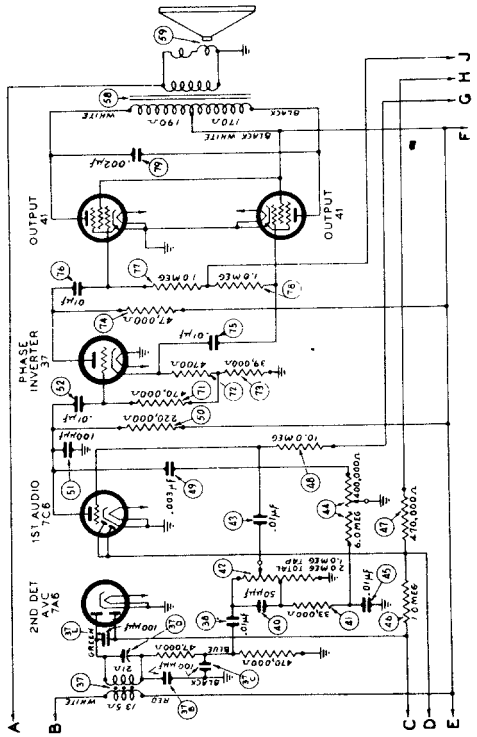

AUDIO CIRCUIT — MODEL 41-290

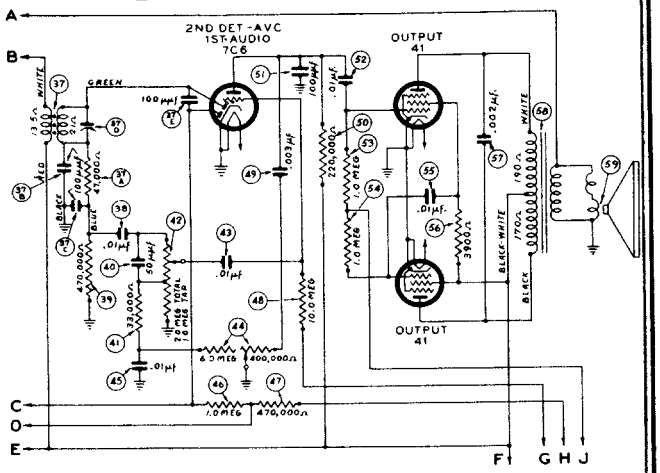

SECOND DETECTOR CIRCUIT — MODEL 41-280

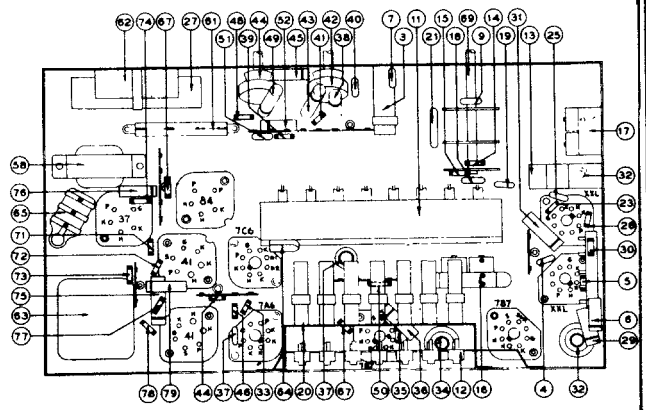

PART LOCATIONS UNDERSIDE — MODEL 41-290

Models 41-280, 41-285, 41-287, 41-290; Code 121

PHILCO

104

COMPILED BY M. N. BEITMAN, SUPREME PUBLICATIONS

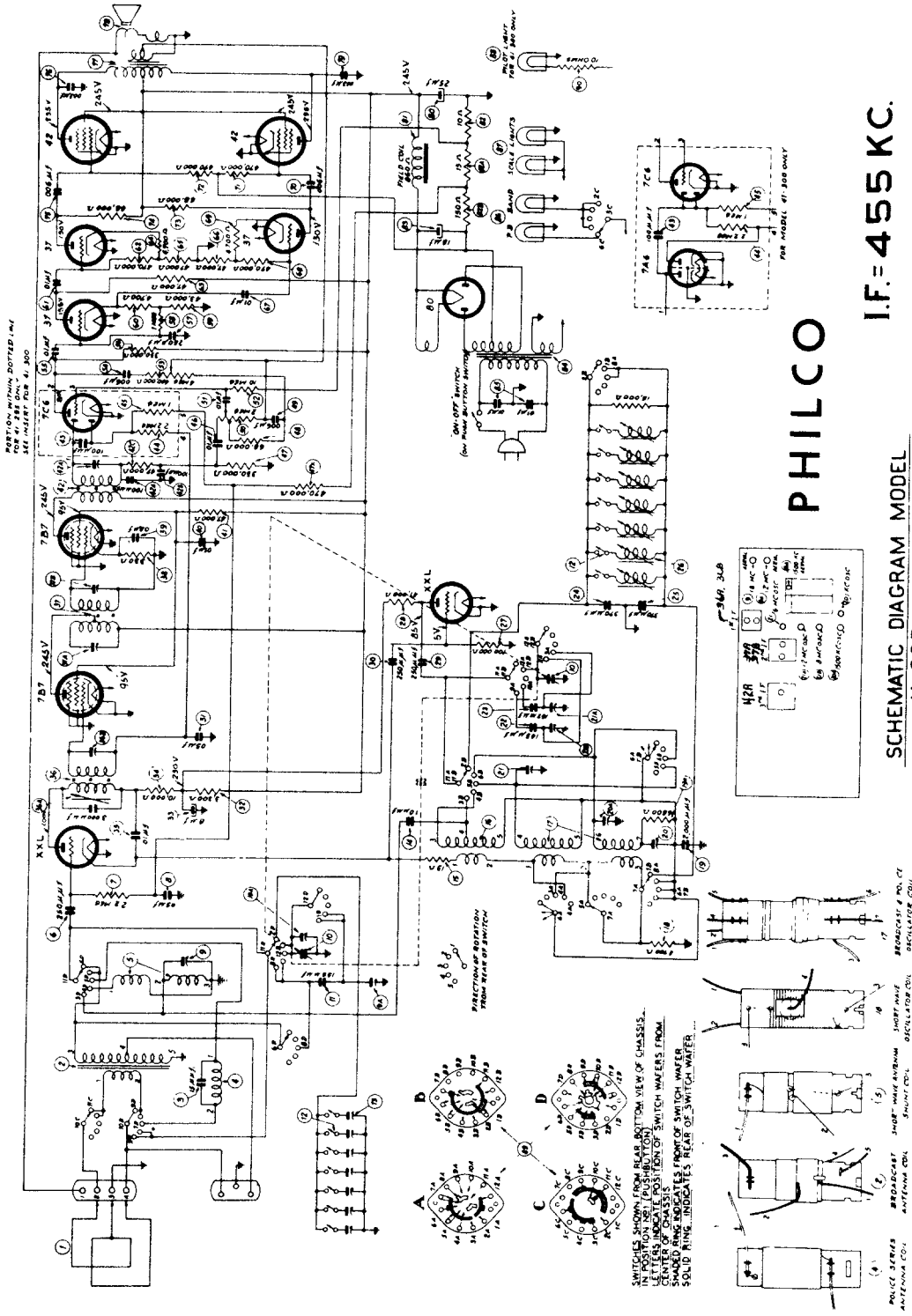
PHILCO
I.F.=455 KC.
SCHEMATIC DIAGRAM MODEL
41-295, 41-300
THE VOLTAGES INDICATED WERE MEASURED WITH A PHILCO MODEL 027 VOLTMETER (1000 OHMS PER VOLT)—POWER SUPPLY 115 VOLTS 60 CYCLE—VOLUME CONTROL MINIMUM
NO SIGNAL BEING RECEIVED—RANGE SWITCH "BROADCAST"
THE ABOVE DIAGRAM IS THE COMPLETE ELECTRICAL CIRCUIT FOR MODEL 41-295. THE SAME GENERAL CIRCUIT IS ALSO USED IN MODEL 41-300 WITH THE EXCEPTION OF THE ADDITIONAL 7A6 TUBE IN THE 2ND DETECTOR A V C CIRCUIT. THE WIRING OF THE ADDITIONAL TUBE IS SHOWN IN THE LOWER RIGHT CORNER OF THE SCHEMATIC.

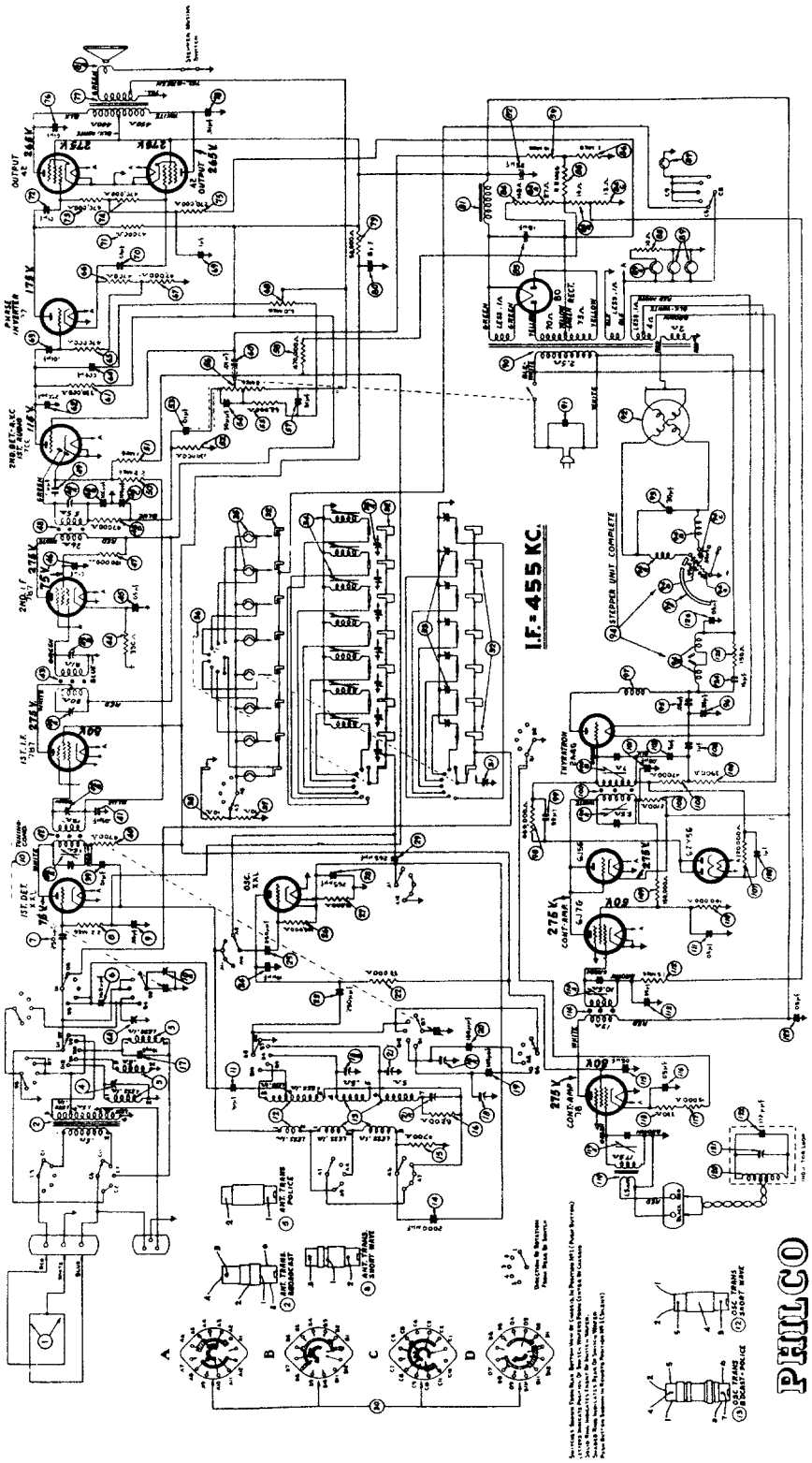

SCHEMATIC DIAGRAM — MODEL 41-316, CODE 121

THE VOLTAGES INDICATED AT THE TUBE ELEMENTS ABOVE WERE MEASURED WITH A 1000 OHMS PER VOLT VOLTMETER. PHILCO MODEL 027, LINE VOLTAGE 118 VOLTS, A. C. BAND SWITCH (BROADCAST), NO STATION BEING RECEIVED.

MANUAL OF 1941 MOST POPULAR SERVICE DIAGRAMS

Operations in Order	SIGNAL GENERATOR		RECEIVER			SPECIAL INSTRUCTIONS
	Output Connections to Receiver	Dial Setting	Dial Setting	Control Settings	Adjust Compensators in Order	
1	High side to No. 3 terminal loop Panel.	455 K. C.	580 K. C.	Vol. Max. Range Switch "S. W." Position	48D, 43A, 43B, 42A, 42B	
2	Use Loop on Generator	1500 K. C.	1500 K. C.	Vol. Max. Range Switch Broadcast	21, 10A	Note A
3	Use Loop on Generator	580 K. C.	580 K. C.	Vol. Max. Range Switch Broadcast	21A	Roll Tuning Con Note B
4	Use Loop on Generator	Repeat operation No. 2 again				
5	Use Loop on Generator	6 M. C.	6 M. C.	Range Switch "Police"	18B	Note C
6	Use Loop on Generator	12 M. C.	12 M. C.	Range Switch "S. W." 1	18A, 4A	Note D
7	Use Loop on Generator	18 M. C.	18 M. C.	Range Switch "S. W." 2	18, 4	Note E

Note A — DIAL CALIBRATION: In order to adjust the receiver correctly, the dial must be aligned to track properly with the tuning condenser. To adjust the dial, proceed as follows: With the tuning condenser closed (maximum capacity), set the dial pointer on the extreme left index line at the low frequency end of the broadcast scale. The arrangement of the drive cable in this position is shown in Fig. 6.

NOTE B — When adjusting the compensator, the receiver Tuning Condenser must be adjusted (rolled) as follows: First tune the compensator for maximum output, then vary the tuning condenser of the receiver for maximum output. Now turn the compensator slightly to the right or left and again vary the receiver tuning condenser for maximum output. This procedure of first setting the compensator and then varying the tuning condenser is continued until maximum output reading is obtained.

NOTE C — Adjust compensator (18B) to the SECOND signal peak from the tight (closed) position.

NOTE D — Adjust compensator (18A) to the FIRST signal peak from the tight (closed) position. If the compensator is correctly adjusted the image signal will be weakly heard by leaving the receiver dial at 12 M. C. and turn the signal generator to 11.090 M. C.

NOTE E — Adjust compensator (18) to the SECOND signal peak from the tight (closed) position. If the compensator is correctly adjusted the image signal will be weakly heard by leaving the receiver at 18 M. C. and turning the signal generator to 18.910 M. C. When adjusting compensator (4) roll the tuning condenser, See Note "B" on how to roll the condenser.

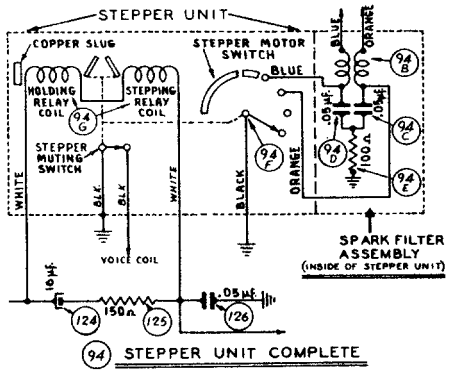

INTERNAL WIRING OF STEPPER UNIT
NUMBERS CORRESPOND TO SCHEMATIC

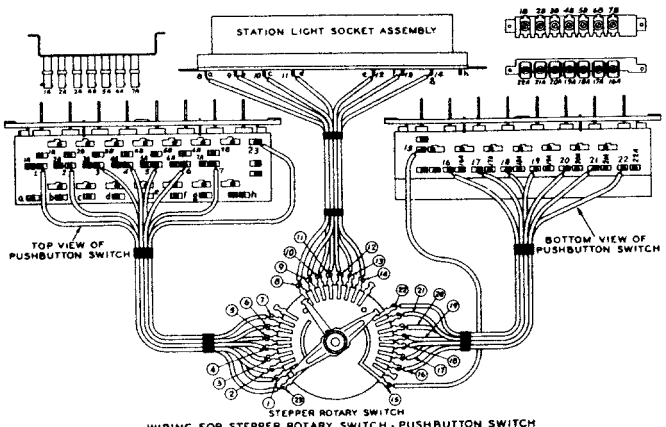

WIRING FOR STEPPER ROTARY SWITCH, PUSHBUTTON SWITCH & STATION LIGHT SOCKET ASSEMBLY

CABLE WIRING FROM STEPPER ROTARY SWITCH TO PUSH-BUTTON SWITCH AND STATION LIGHTS

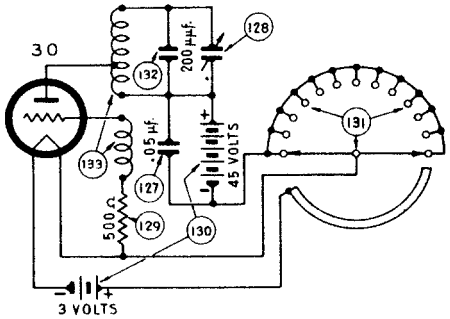

SCHEMATIC DIAGRAM OF WIRELESS REMOTE CONTROL UNIT

WIRELESS REMOTE CONTROL UNIT WIRING

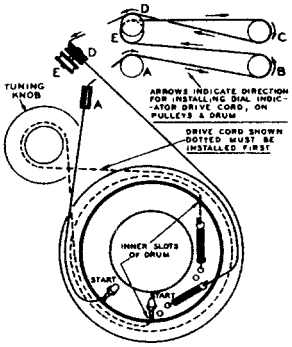

INSTALLATION OF DRIVE CORDS
POINTER AT LOW FREQUENCY END OF DIAL
GANG CLOSED.

PHILCO

Model 41-316

COMPILED BY M. N. BEITMAN, SUPREME PUBLICATIONS

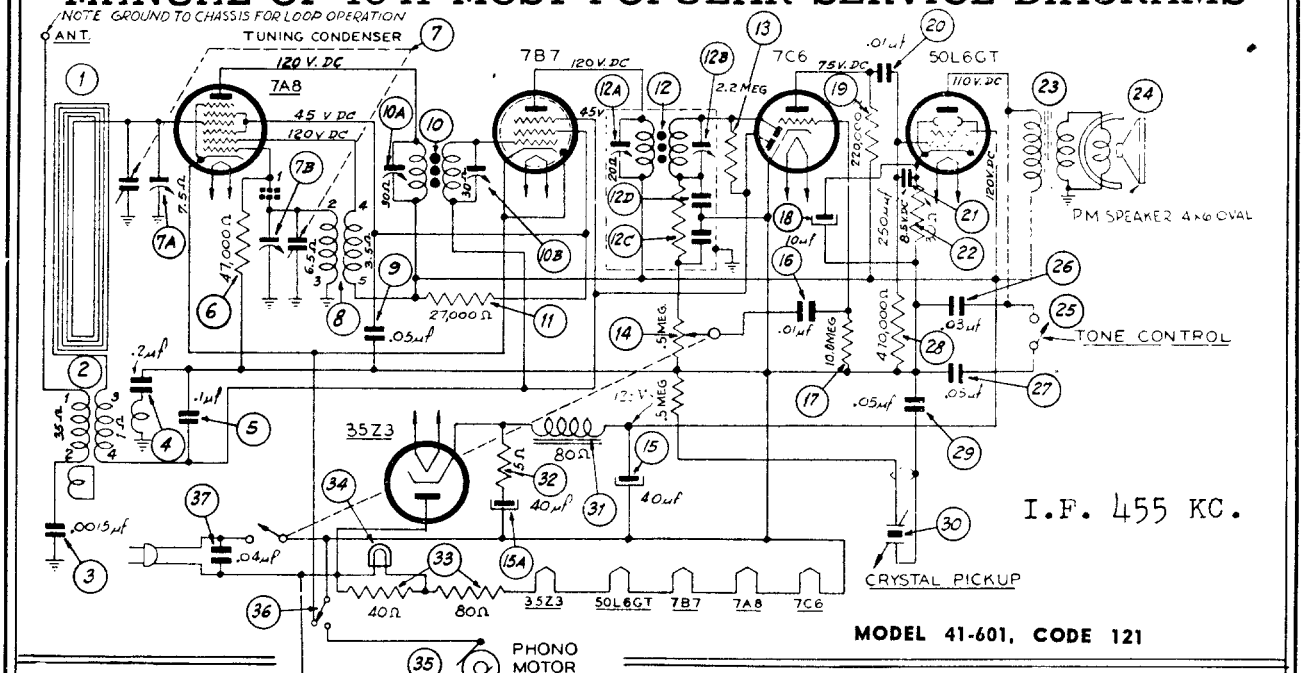

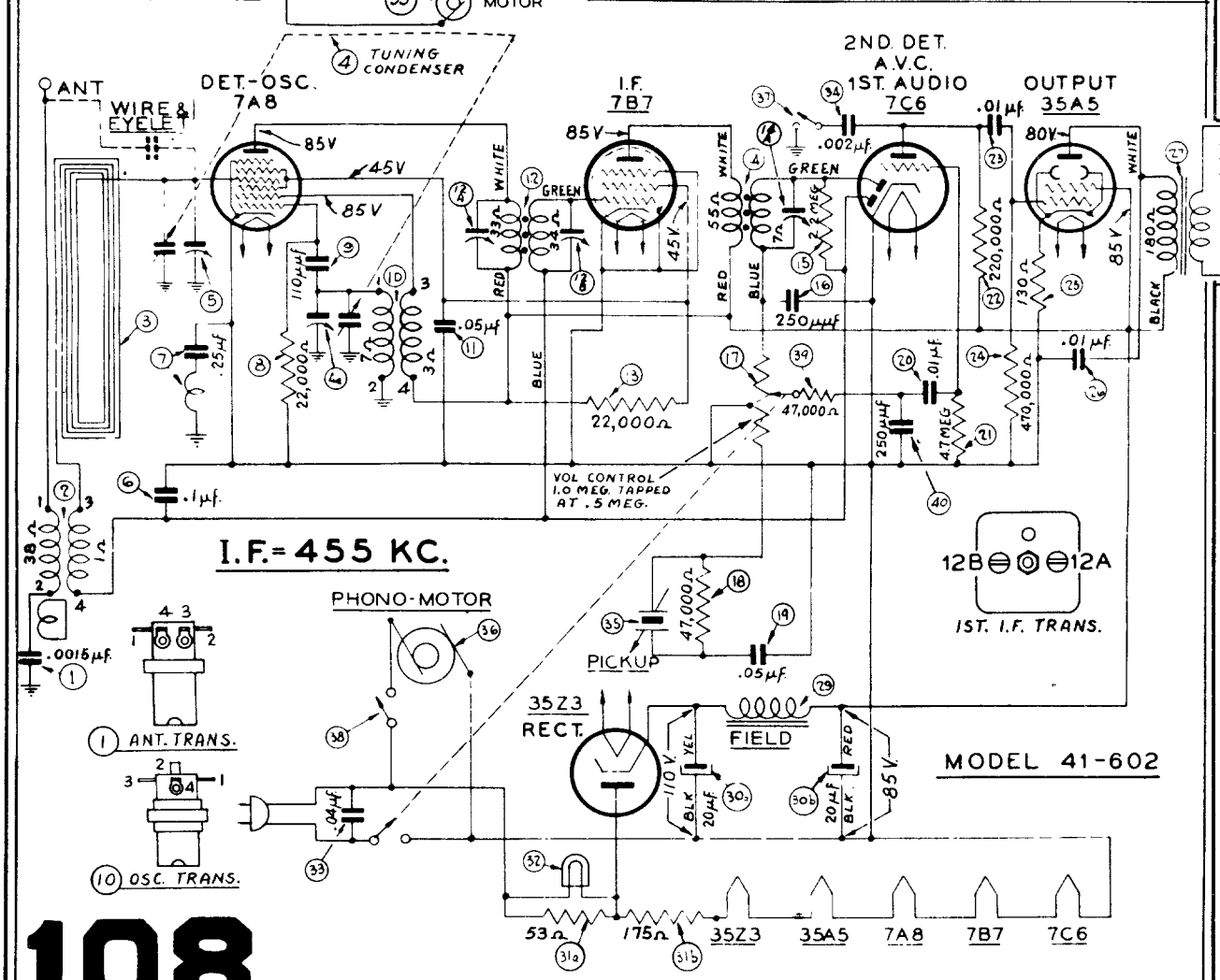

COMPILED BY M. N. BEITMAN, SUPREME PUBLICATIONS

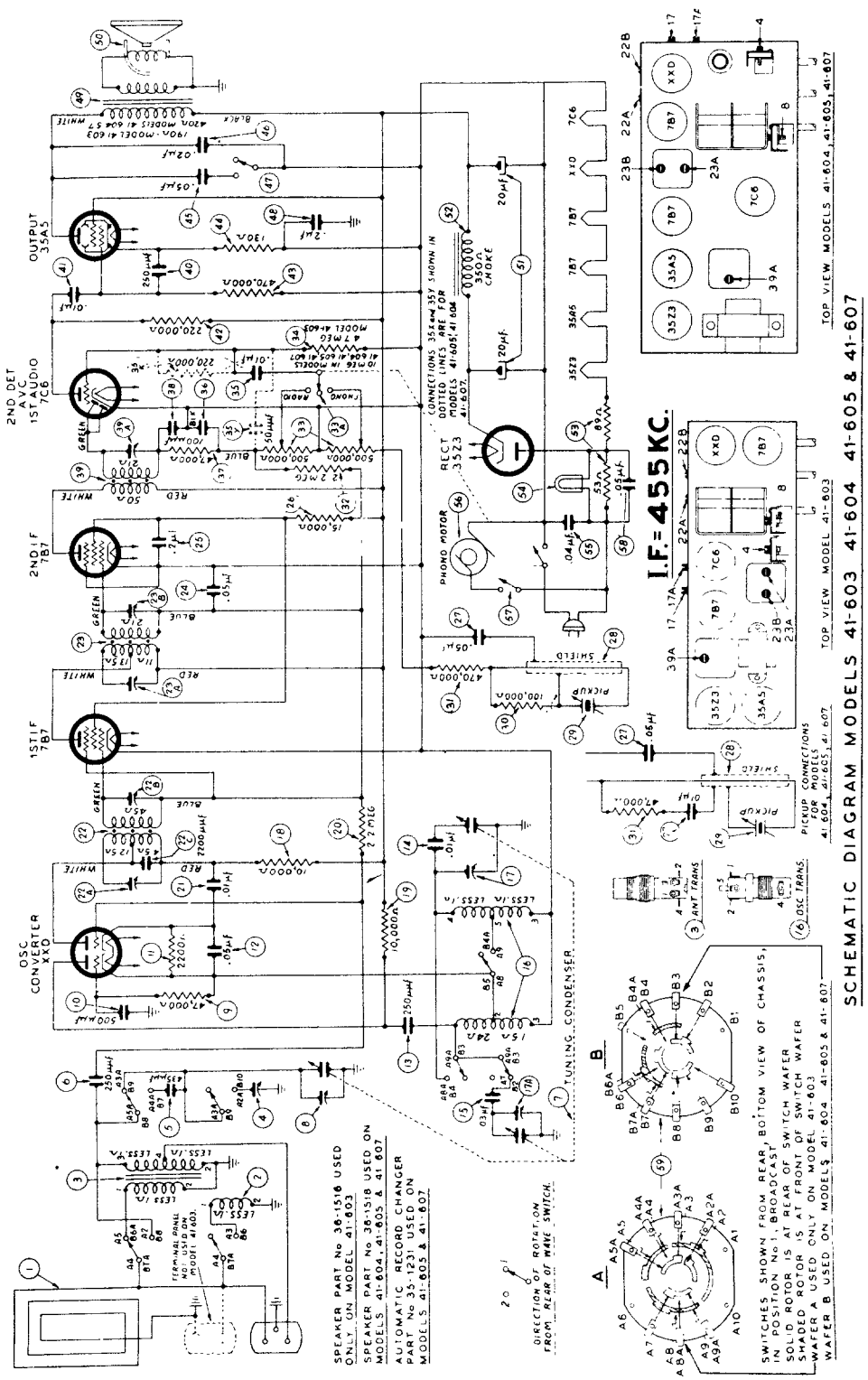

SCHEMATIC DIAGRAM MODELS 41-603 41-604 41-605 & 41-607

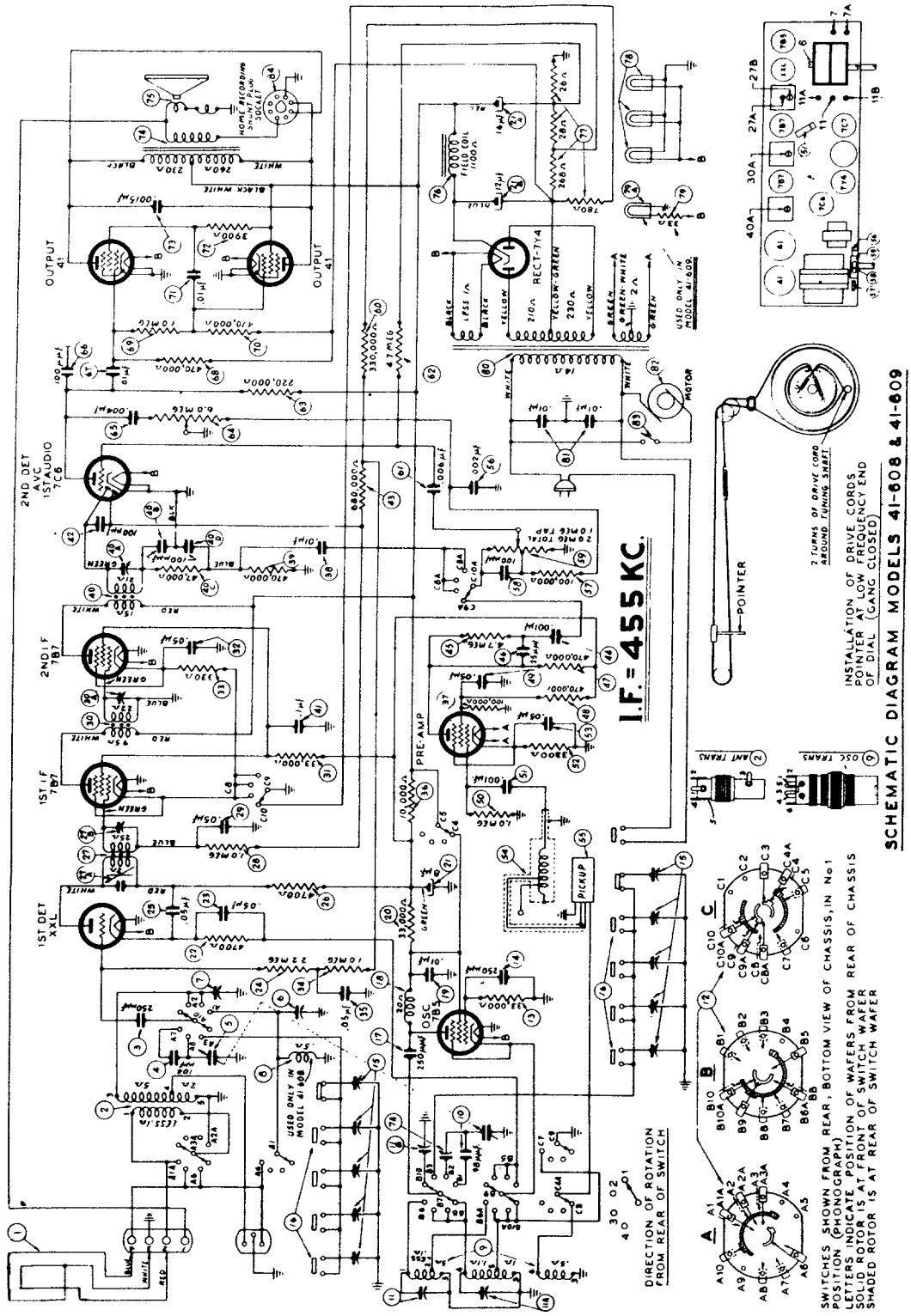
SCHEMATIC DIAGRAM MODELS 41-608 & 41-609
I.F.=455 KC.
INSTALLATION OF DRIVE CORDS
POINTER AT LOW FREQUENCY END
OF DIAL (GANG CLOSED)
2 TURNS OF DRIVE CORD AROUND TUNING SHAFT
POINTER
SWITCHES SHOWN FROM REAR, BOTTOM VIEW OF CHASSIS, IN No 1
POSITION (PHONOGRAPH)
LETTERS INDICATE POSITION OF WAFERS FROM REAR OF CHASSIS
SOLID ROTOR IS AT FRONT OF SWITCH WAFER
SHADED ROTOR IS AT REAR OF SWITCH WAFER
DIRECTION OF ROTATION FROM REAR OF SWITCH
USED ONLY IN MODEL 41-608
USED ONLY IN MODEL 41-609
OUTPUT 41
2ND DET AVC 1ST AUDIO 7C6
2ND I F 7B7
1ST I F 7B7
1ST DET XXL
PRE-AMP
OSC
RECT-7Y4
MOTOR
PICKUP
ANT TRANS
OSC TRANS
HOME RECORDING SOCKET

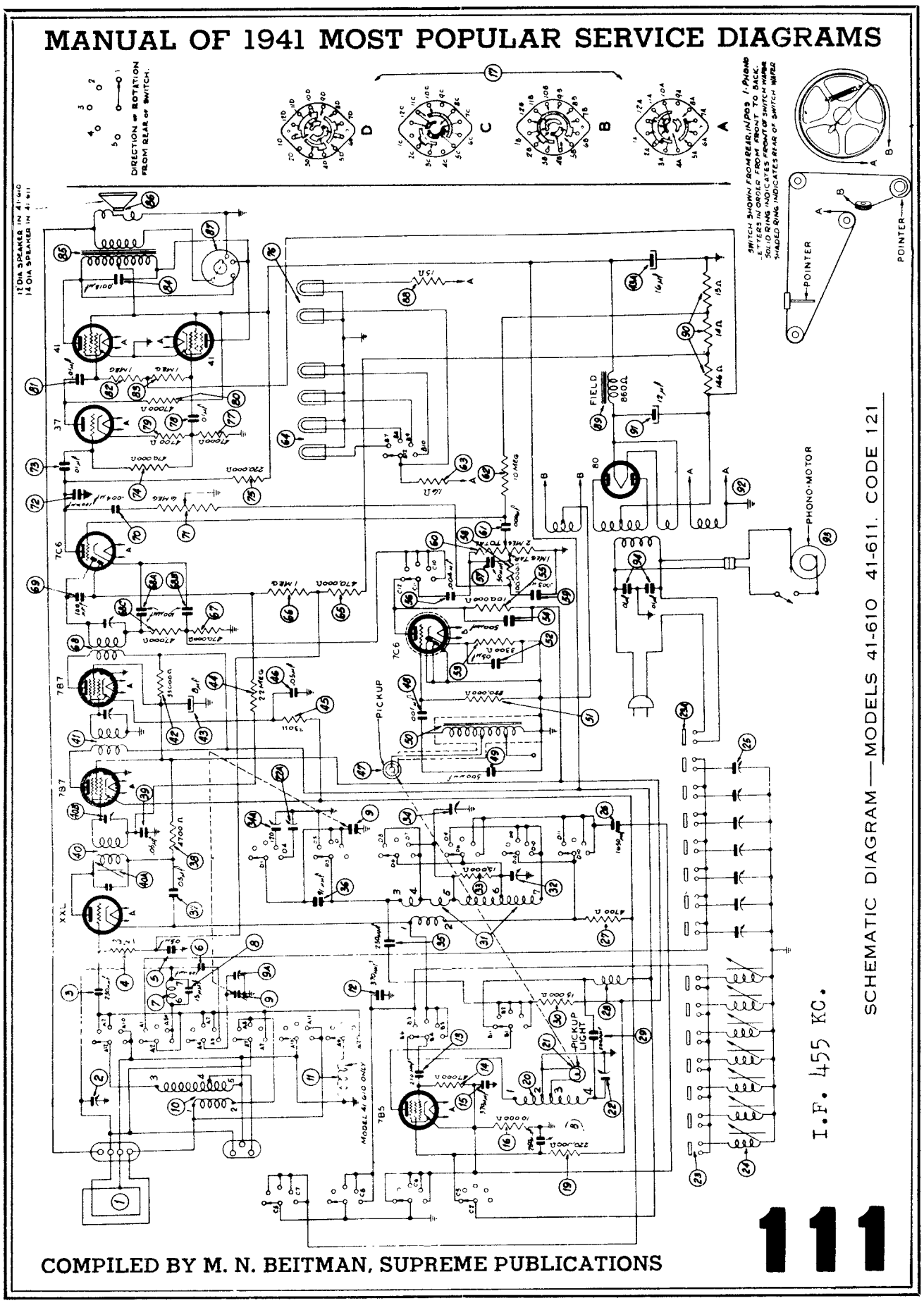

SCHEMATIC DIAGRAM—MODELS 41-610 41-611. CODE 121

PHILCO *Phonograph Model 41-620*

To reproduce the sound from a record, the light beam of the reproducer must be carefully positioned on the light sensitive cell. If the light beam is not carefully set, the sound reproduction will be distorted, weak or, if the light beam is completely on or off the cell, the phonograph will be silent.

If any of these conditions exist, the following adjustment procedure should be made: —

NOTE — These adjustments should be made with the power line voltage at 118 volts A. C.

A.—ADJUSTING WIDTH OF LIGHT-BEAM

To make this adjustment push the lamp socket assembly into its holder until a clear image of the lamp filament appears on the light cell. The socket should then be slightly pushed in beyond this point until the rectangular spot of light is 5/32" in width. The socket assembly is now rotated so that the spot light is vertical.

B.—POSITIONING THE LIGHT-BEAM

To position the light-beam on the light cell, turn the adjusting screw at the lower left side of the reproducer until the spot is half on the cell and half on the metal frame surrounding the cell.

C.—ADJUSTING INTENSITY OF LAMP

When shipped from the factory, the lamp of the reproducer is adjusted for best operating efficiency. The intensity of the light from the lamp is adjusted by compensator (22) located on the radio chassis. Under ordinary circumstances, an adjustment will not be necessary. When replacing the reproducer or lamp, however, there may be a tendency towards microphonic feedback. In this case the compensator is adjusted as follows:

1. Turn volume control on full and play a record.
2. While the record is playing, turn compensator in the direction necessary to eliminate microphonic feedback. By turning the compensator the strength of the pick-up output is increased or decreased.

D.—INSTALLING NEW LAMP

When installing a new lamp in the socket, there are two positions in which the lamp can be inserted. Ordinarily, either of these positions can be used. In some cases, however, due to the lamp filament being off center, the lamp must be inserted in the position that gives the best centering of the spot of light on the vibrating mirror.

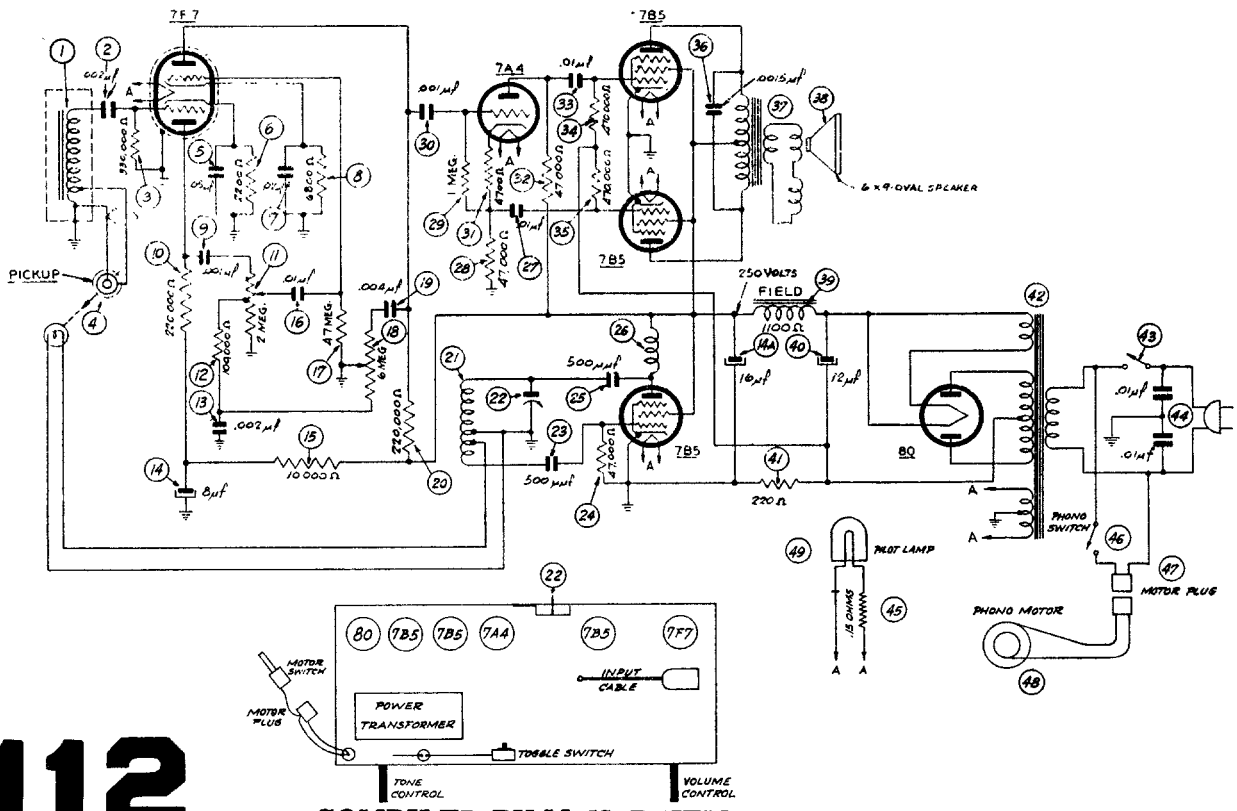

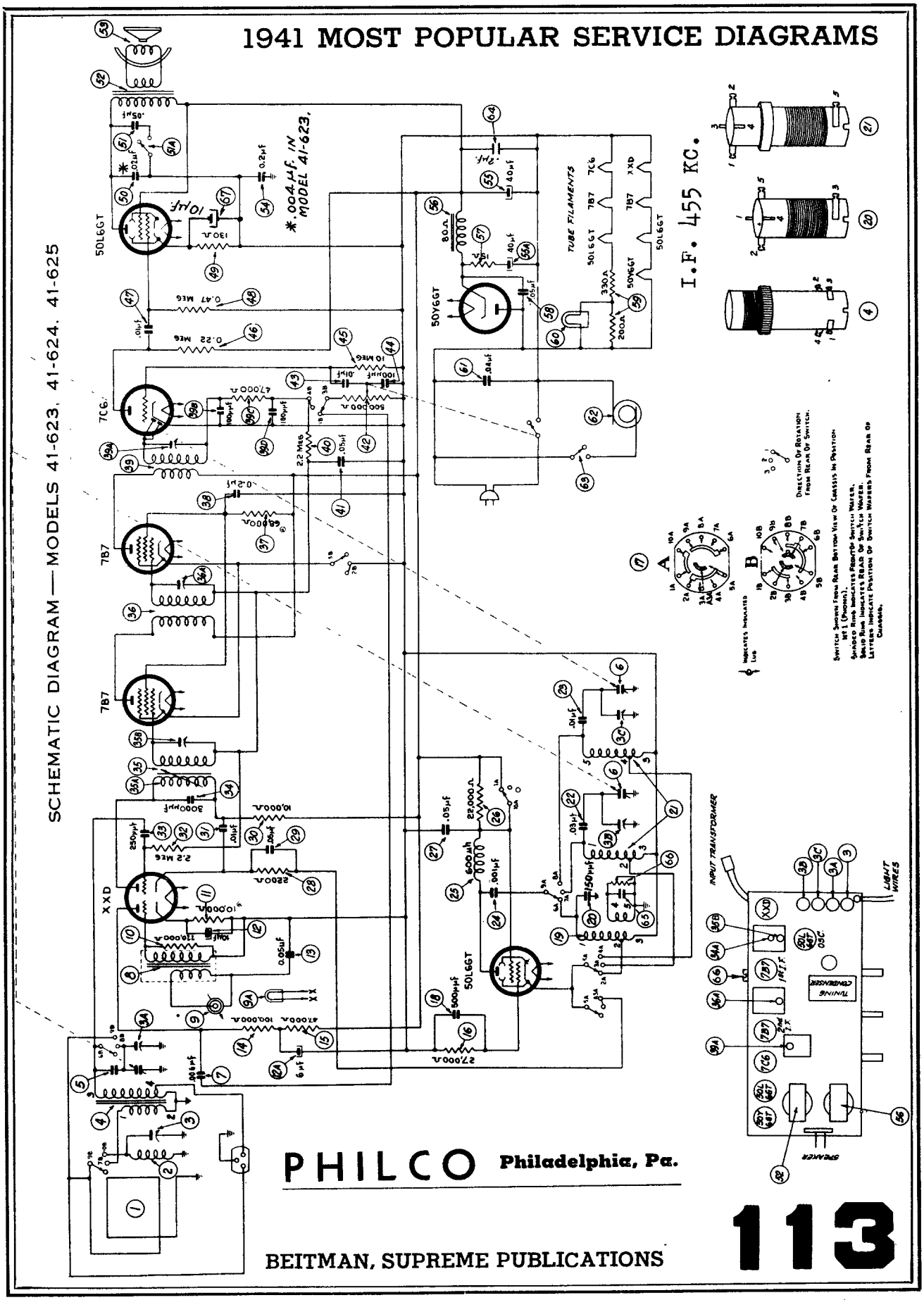

PHILCO Philadelphia, Pa.

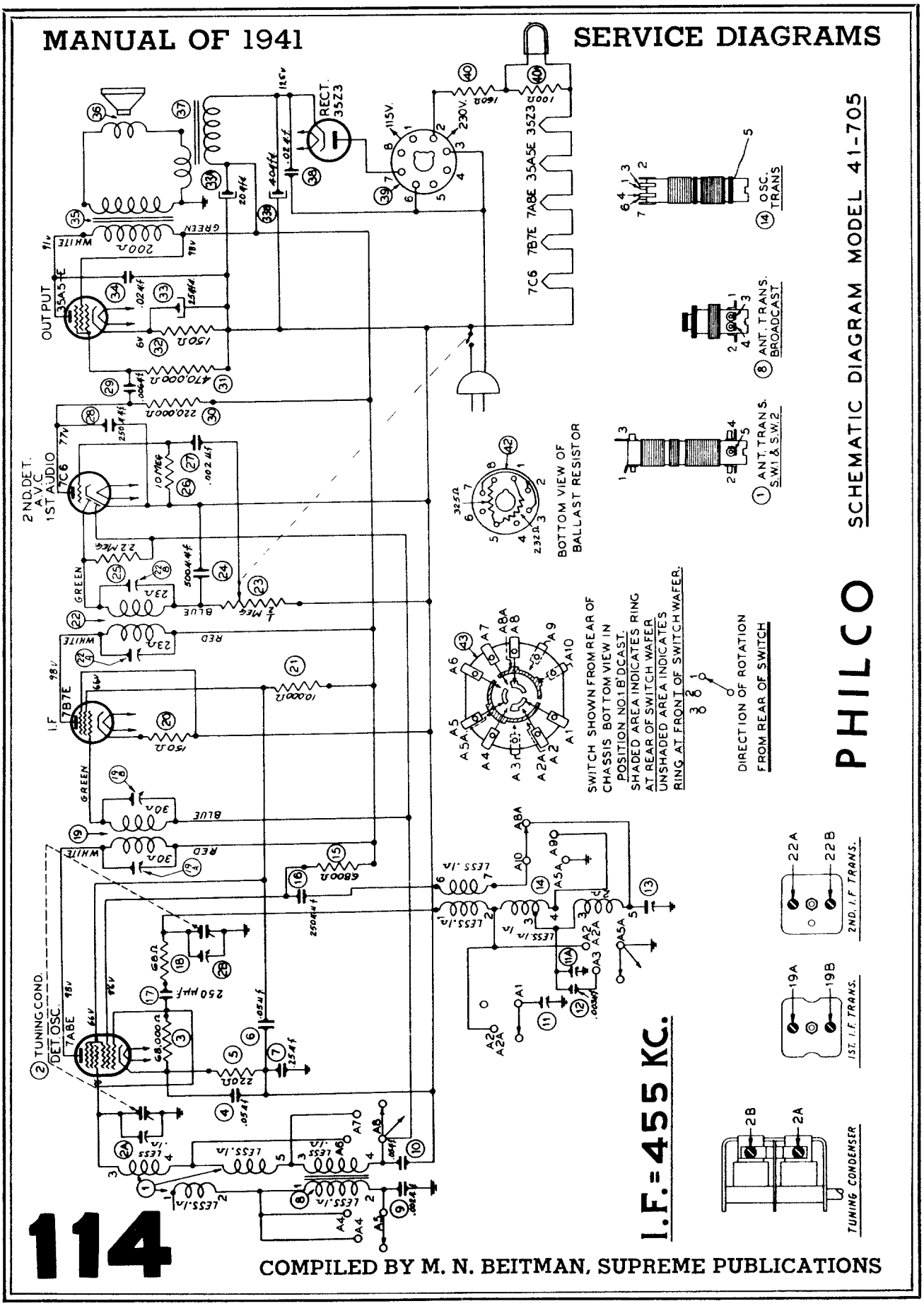
PHILCO
SCHEMATIC DIAGRAM MODEL 41-705
I.F.=455 KC.
OUTPUT 35A5
2 ND. DET. A.V.C. 1 ST AUDIO 7C6
I.F. 7B7E
TUNING COND. DET. OSC. 7A6E
RECT. 35Z3
7C6 7B7E 7A6E 35A5E 35Z3
BOTTOM VIEW OF BALLAST RESISTOR
SWITCH SHOWN FROM REAR OF CHASSIS BOTTOM VIEW IN POSITION NO.1 B'DCAST.
SHADED AREA INDICATES RING AT REAR OF SWITCH WAFER
UNSHADED AREA INDICATES RING AT FRONT OF SWITCH WAFER.
DIRECTION OF ROTATION FROM REAR OF SWITCH
1 ANT. TRANS. S.W.1 & S.W.2
8 ANT. TRANS. BROADCAST
14 OSC. TRANS
2ND. I.F. TRANS.
1ST. I.F. TRANS.
TUNING CONDENSER

SCHEMATIC DIAGRAM MODEL 41-851, RUNS 1 AND 2

1	Stator Plate Lug Loop Tuning Condenser	455 K. C.	540 K. C.	Vol. Max.	18A, 18B, 24A
2	Loop on Generatcr	1500 K. C.	1500 K. C.	Range Switch "Brdcst" Vol. Max.	3C, 3D
3	Loop on Generator	580 K. C.	580 K. C.	Range Switch "Brdcst" Vol. Max.	50
4	Recheck operation No. "2"				
5	Loop on Generator	6 M. C.	6 M. C.	Range Switch "S. W."	50A
6	Loop on Generator	15 M. C.	15 M. C.	Range Switch "S. W."	3B, 3A

Model 41-851, Code 121, Runs 1 and 2

Model 41-851, Code 121, Runs 1 and 2 is a five (5) tube portable A. C.-D. C. or battery operated superheterodyne radio with two tuning ranges, 540 to 1600 K. C. and 6 to 15 M. C. In addition this model includes: a Built-in Loop Aerial; Beam Power Pentode Audio Output Stage; Highly Sensitive Permanent Magnet Speaker; PHILCO Super-efficient Loktal Tubes and an ON-OFF Indicator.

Production Runs 1 and 2 of this model are identical with the exception of the 2nd Detector, 1st Audio tube. The early production (Run 1) radios used a 1H5G tube and the later production radios (Run 2) contained a 1L5D tube.

PHILCO TUBES USED: 1A7G, Oscillator Converter; 1N5G, I. F. Amplifier; *1H5G, (Run No. 1) 2nd Detector, 1st Audio A. V. C.; 35Q5G, Audio Output; 117Z6G, Rectifier; *1L5D, (Run No. 2).

INTERMEDIATE FREQUENCY: 455 K. C.

POWER SUPPLY: 115 volts, A. C.-D. C. and a Philco Combination "A. B." battery type P-841.

For portable battery operation wrap the power line cord around its holder clamp on the back of the cabinet back and insert the plug end into the slots provided on the chassis.

To operate on 115 volts A. C.-D. C. remove the power line cord plug from the slots on the chassis and insert into a power receptacle.

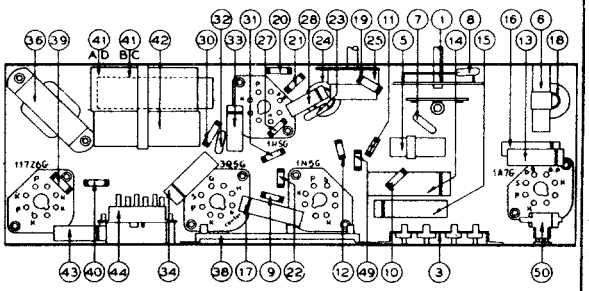

PART LOCATIONS — UNDERSIDE OF CHASSIS
MODEL 41-851, RUN 1

SCHEMATIC DIAGRAM — MODELS 41-842, 41-843 AND 41-844

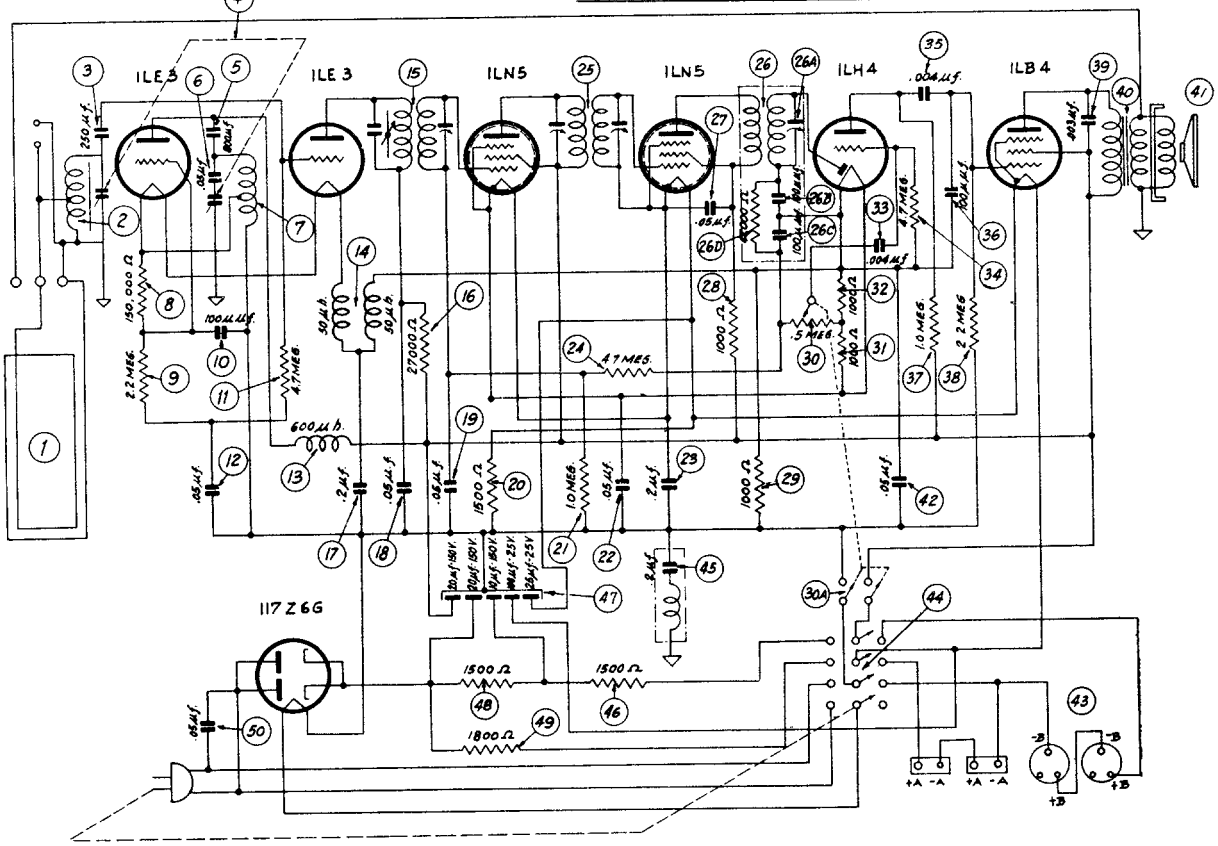

MODELS 41-842, 41-843, 41-844

These models may be adjusted when operated by battery or 115 volts A.C.-D.C. power.

Operations in Order	SIGNAL GENERATOR		RECEIVER		
	Output Connections to Receiver	Dial Setting	Dial Setting	Control Setting	Adjust Compensators
1	See Paragraph on Signal Generator above	455 K.C.	540 K.C.	Vol. Max.	26A, 25A, 25B, 15A, 15B
2	Use Loop on Generator as above	1500 K.C.	1500 K.C.	Vol. Max.	4B, 4A

PHILCO

Models 41-842, 41-843, 41-844

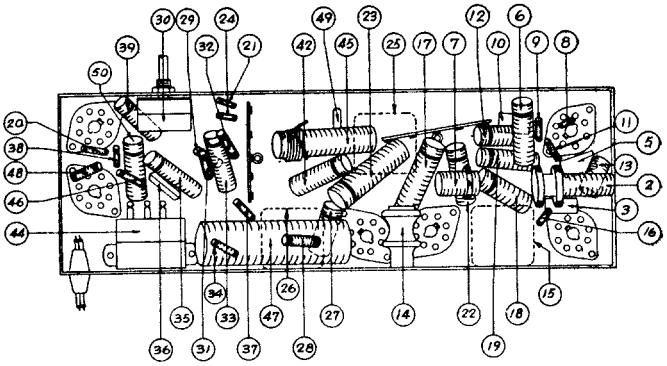

LOCATION OF PARTS — UNDERSIDE OF CHASSIS

COMPILED BY M. N. BEITMAN, SUPREME PUBLICATIONS

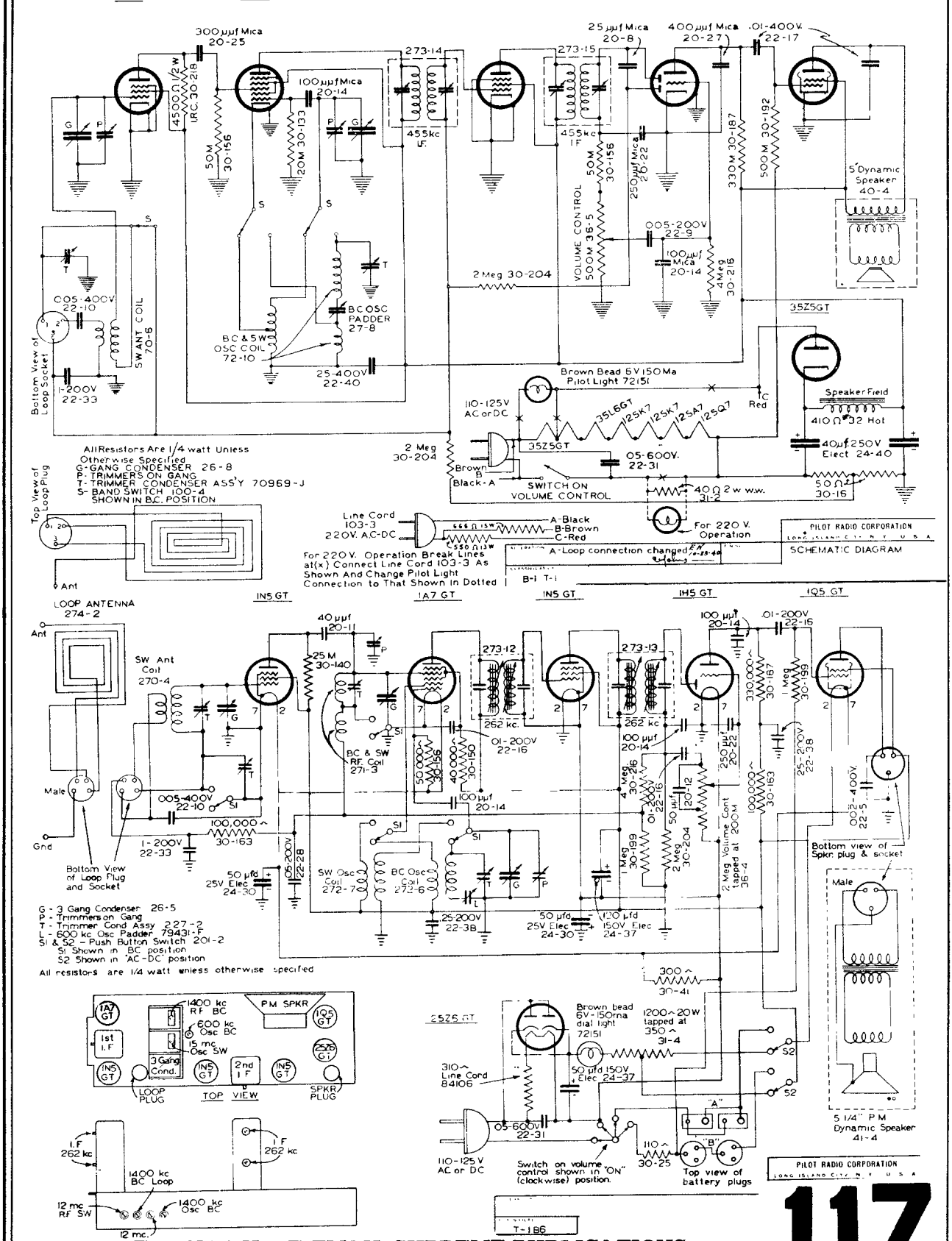
12SK7
12SA7
12SK7
12SQ7
35L6GT
300 μμf Mica 20-25
100 μμf Mica 20-14
273-14
273-15
25 μμf Mica 20-8
400 μμf Mica 20-27
.01-400V. 22-17
4500Ω 1/2 W I.R.C. 30-218
50M 30-156
20M 30-133
455kc I.F.
455kc I.F.
50M 30-156
250 μμf Mica 20-22
330M 30-187
500M 30-192
5" Dynamic Speaker 40-4
VOLUME CONTROL 500M 36-5
.005-200V 22-9
100 μμf Mica 20-14
4 Meg 30-216
2 Meg 30-204
35Z5GT
.005-400V. 22-10
SW ANT COIL 70-6
BC & SW OSC COIL 72-10
BC OSC PADDER 27-8
25-400V 22-40
1-200V 22-33
Bottom View of Loop Socket
Brown Bead 6V 150Ma Pilot Light 72151
110-125V AC or DC
35L6GT
12SK7
12SK7
12SA7
12SQ7
Speaker Field
410Ω 32 Hot
40 μf 250V Elect 24-40
2 Meg 30-204
Brown B
Black-A
35Z5GT
05-600V. 22-31
SWITCH ON VOLUME CONTROL
40Ω 2 w w.w. 31-2
50Ω 30-16
All Resistors Are 1/4 watt Unless Otherwise Specified
G-GANG CONDENSER 26-8
P-TRIMMERS ON GANG
T-TRIMMER CONDENSER ASS'Y 70969-J
S-BAND SWITCH 100-4 SHOWN IN B.C. POSITION
Top View of Loop Plug
Ant
Line Cord 103-3 220V. A.C.-DC
A-Black
B-Brown
C-Red
For 220 V. Operation
For 220V. Operation Break Lines at(x). Connect Line Cord 103-3 As Shown And Change Pilot Light Connection to That Shown In Dotted
A-Loop connection changed
B-1 T-1
PILOT RADIO CORPORATION
LONG ISLAND CITY, N. Y. U. S. A.
SCHEMATIC DIAGRAM
LOOP ANTENNA 274-2
Ant
SW Ant Coil 270-4
Male
Gnd
Bottom View of Loop Plug and Socket
.005-400V 22-10
1-200V 22-33
100,000Ω 30-163
50 μfd 25V Elec 24-30
.05-200V 22-28
1N5GT
1A7GT
1N5GT
1H5GT
1Q5GT
40 μμf 20-11
25M 30-140
273-12
273-13
262 kc.
262 kc
.01-200V 22-16
BC & SW RF. Coil 271-3
50,000Ω 30-156
40,000Ω 30-150
100 μμf 20-14
100 μμf 20-14
.01-200V 22-16
330,000Ω 30-167
1 Meg 30-199
.01-200V 22-16
250 μμf 20-22
4 Meg 30-216
.01-200V 22-16
50 μμf 20-12
100,000Ω 30-163
25-200V 22-38
.002-400V. 22-5
1 Meg 30-199
2 Meg 30-204
2 Meg Volume Cont tapped at 200M 36-4
SW Osc Coil 272-7
BC Osc Coil 272-6
.25-200V 22-38
50 μfd 25V Elec 24-30
120 μfd 150V Elec 24-37
Bottom view of Spkr. plug & socket
Male
G - 3 Gang Condenser 26-5
P - Trimmers on Gang
T - Trimmer Cond Assy 227-2
L - 600 kc Osc Padder 79431-F
S1 & S2 - Push Button Switch 201-2
S1 Shown in BC position
S2 Shown in 'AC-DC' position
All resistors are 1/4 watt unless otherwise specified
300Ω 30-41
1A7 GT
1400 kc RF BC
600 kc Osc BC
15 mc Osc SW
PM SPKR
1Q5 GT
1st I.F
3 Gang Cond.
2nd I F
1N5 GT
2526 G.T.
LOOP PLUG
TOP VIEW
SPKR PLUG
I.F 262 kc
1400 kc BC Loop
12 mc RF SW
1400 kc Osc BC
12 mc.
2526 GT
Brown bead 6V-150ma dial light 72151
1200Ω 20W tapped at 350Ω 31-4
310Ω Line Cord 84106
50 μfd 150V Elec 24-37
05-600V 22-31
110-125 V AC or DC
Switch on volume control shown in "ON" (clockwise) position.
110Ω 30-25
Top view of battery plugs
5 1/4" P M Dynamic Speaker 41-4
T-1B6

RCA MANUFACTURING COMPANY, INC.
CAMDEN, N. J., U. S. A.

1X and 1X2

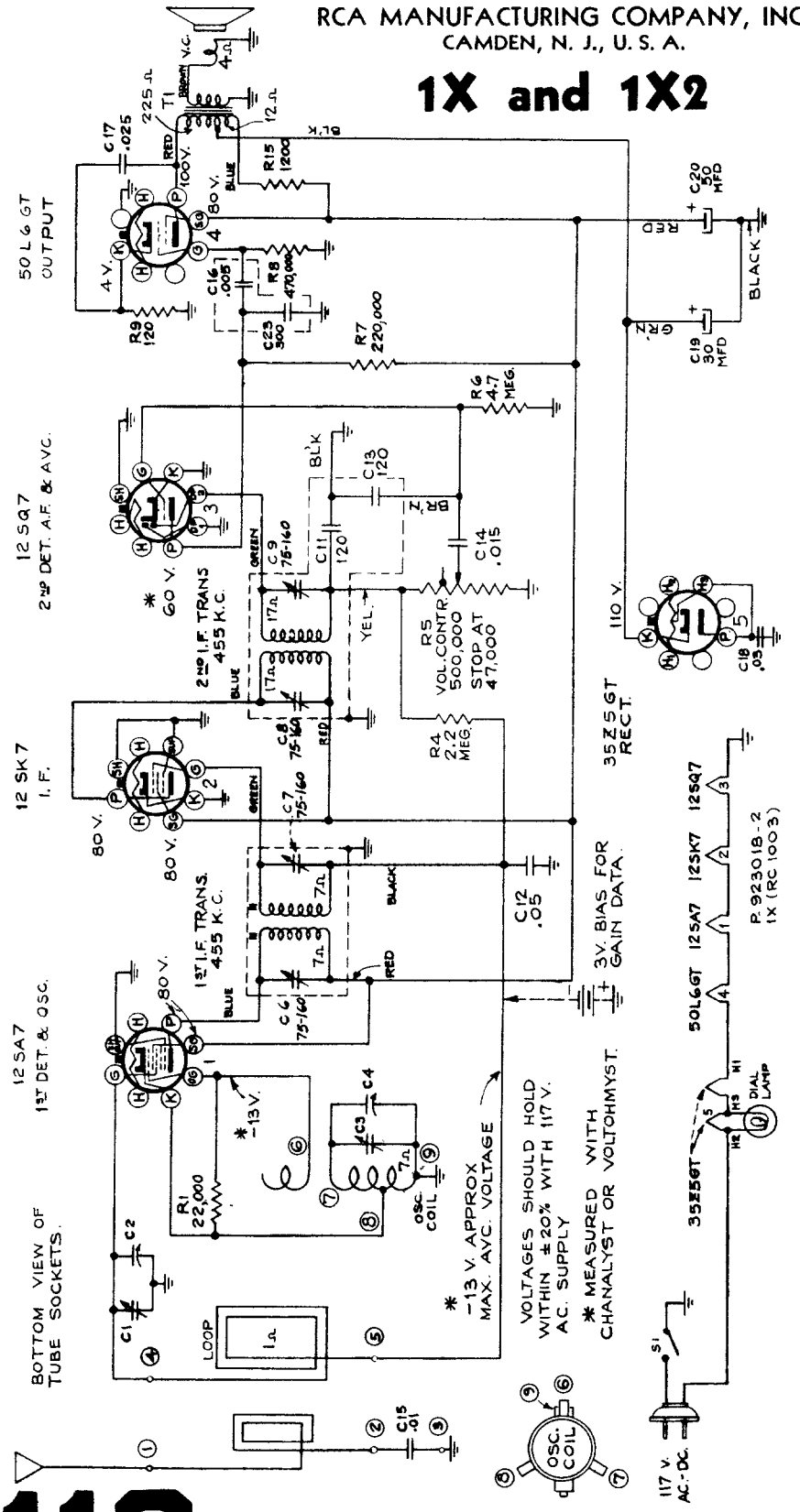

Steps	Connect the high side of test-oscillator to—	Tune test-osc. to—	Turn radio dial to—	Adjust the following for max. peak output
1	I-F grid, in series with .01 mfd.	455 kc	Quiet point 1,600 kc end of dial	C8, C9 2nd I-F Transformer
2	1st Det. grid in series with .01 mfd.			C6, C7 1st I-F Transformer
3	Ant. terminal in series with 100 mmfd.	1,720 kc	Gang at minimum	C3 (osc.)
4	Radiated signal 1300 kc		Signal Frequency	C1 (ant.)
5	Repeat steps 3 and 4.			

Output Meter Alignment.—Connect the meter across the voice coil and turn the receiver volume control to maximum.

Electronic Voltmeter.—The electronic voltmeter in the Chanalyst or VoltOhmyst provides an unexcelled output indicator. It should be connected to the AVC bus.

Test-Oscillator.—For I-F alignment, connect the low side of the test-oscillator to the receiver chassis through a .01 mfd. capacitor, and keep the output as low as possible.

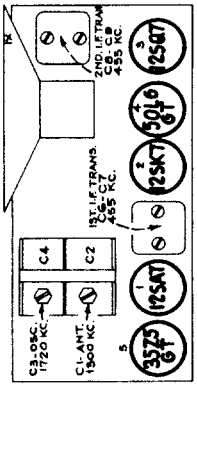

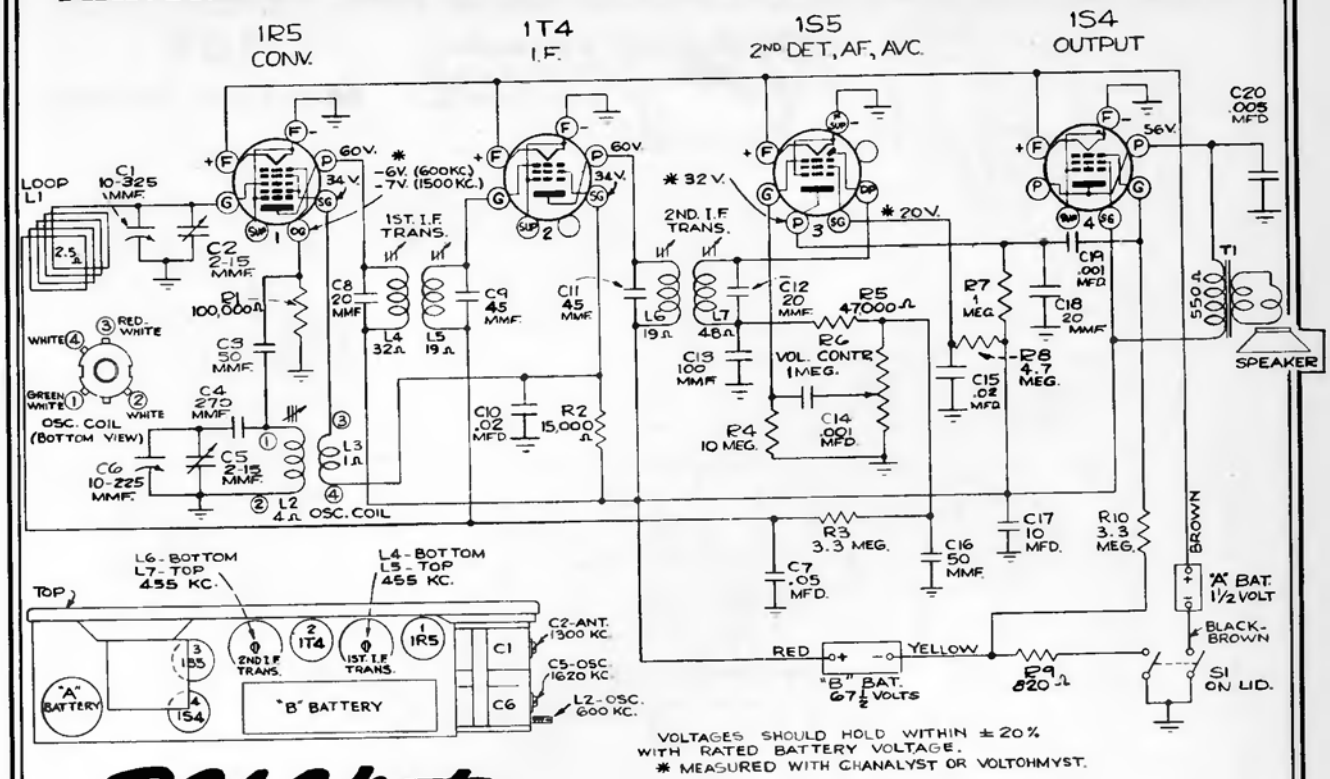

RCA Victor

MODEL BP-10 PERSONAL RADIO

Alignment Procedure

Output Meter Alignment.—If this method is used, connect the meter across the voice coil, and turn the receiver volume control to maximum.

Test-Oscillator.—For all alignment operations, keep the output as low as possible to avoid a-v-c action.

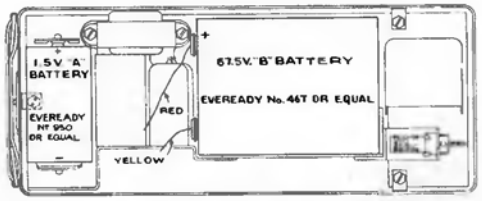

Steps	Connect the high side of test-osc. to—	Tune test-osc. to—	Turn radio dial to—	Adjust the following for max. peak output—
1	Tuning condenser stator (ant.) in series with .01 mfd.	455 kc	Quiet point at 1,600 kc end of dial	L7, L6, L5, L4 (2nd and 1st I-F transformers)
2	Radiated signal 1,620 kc	1,620 kc	Full clockwise (out of mesh)	C5 (oscillator)
3	Radiated signal 1,300 kc	1,300 kc	1,300 kc	C2 (antenna)
4	Radiated signal 600 kc	600 kc	600 kc	L2 (osc.)
5	Repeat steps 2, 3 and 4.			

POWER SUPPLY

Type Battery	Current Consumption	Approximate Life (Intermittent Duty)
"A"—1.5 volt Eveready No. 950	0.25 amperes	3-5 hours
"B"—67.5 volts Eveready No. 467	8.5 milliamperes	25-40 hours

POWER OUTPUT

Undistorted ..... 0.05 watts
Maximum ..... 0.12 watts

RCA Victor

10X

Chassis No. RC-1001

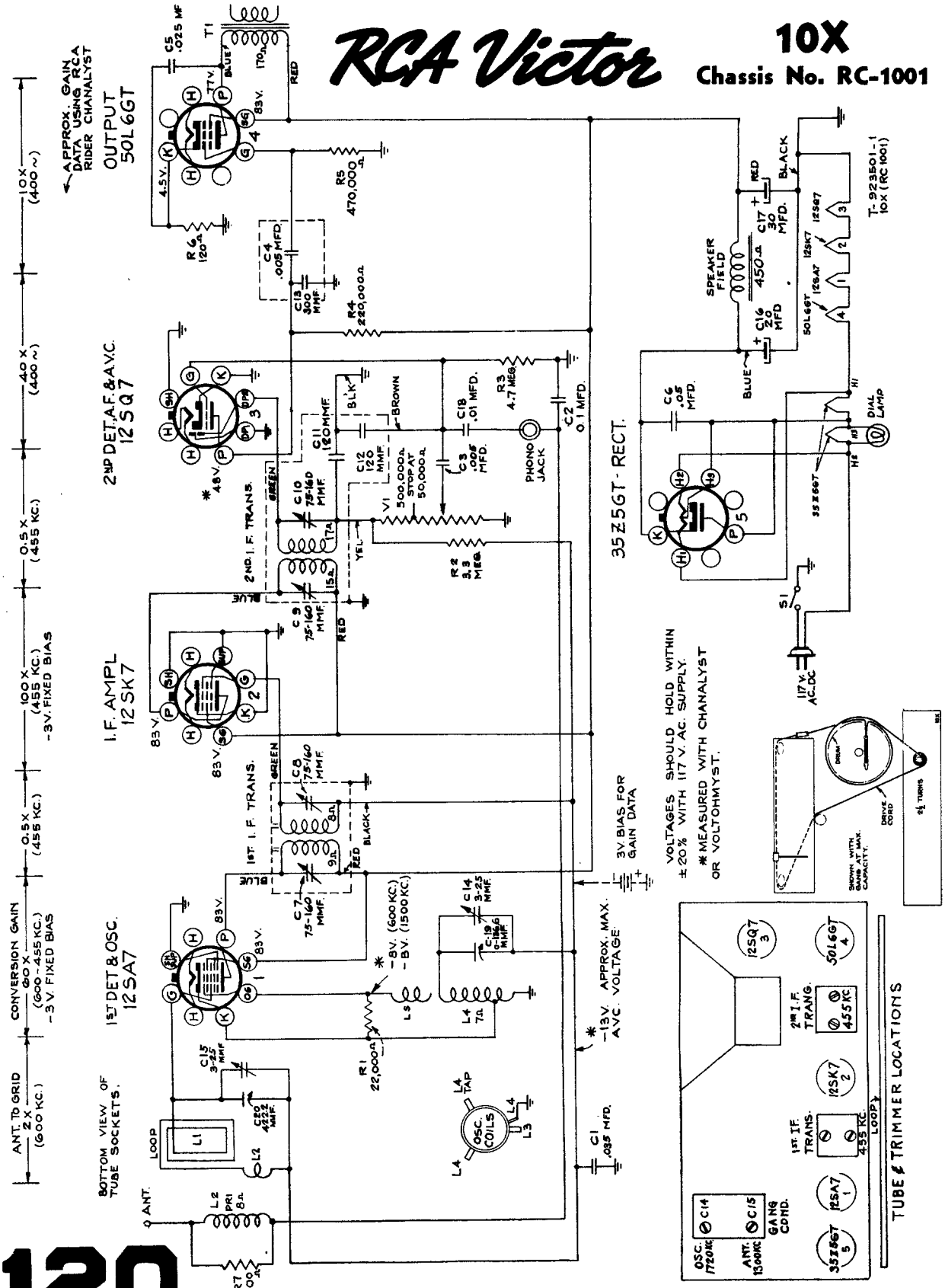

COMPILED BY M. N. BEITMAN, SUPREME PUBLICATIONS

MANUAL OF 1941 MOST POPULAR SERVICE DIAGRAMS

RCA MANUFACTURING COMPANY, INC.
CAMDEN, N. J., U. S. A.

12X and 12X2

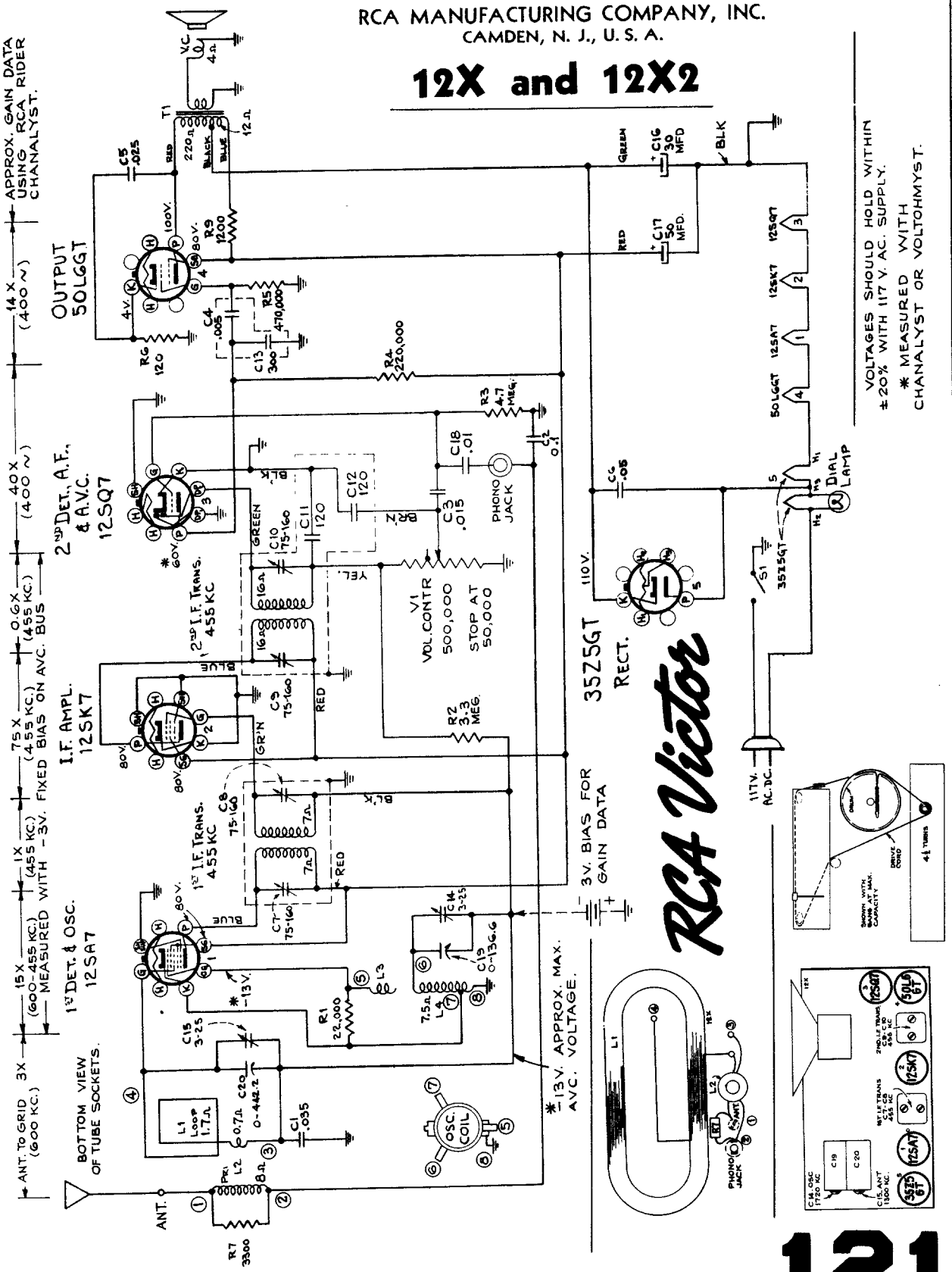

COMPILED BY M. N. BEITMAN, SUPREME PUBLICATIONS

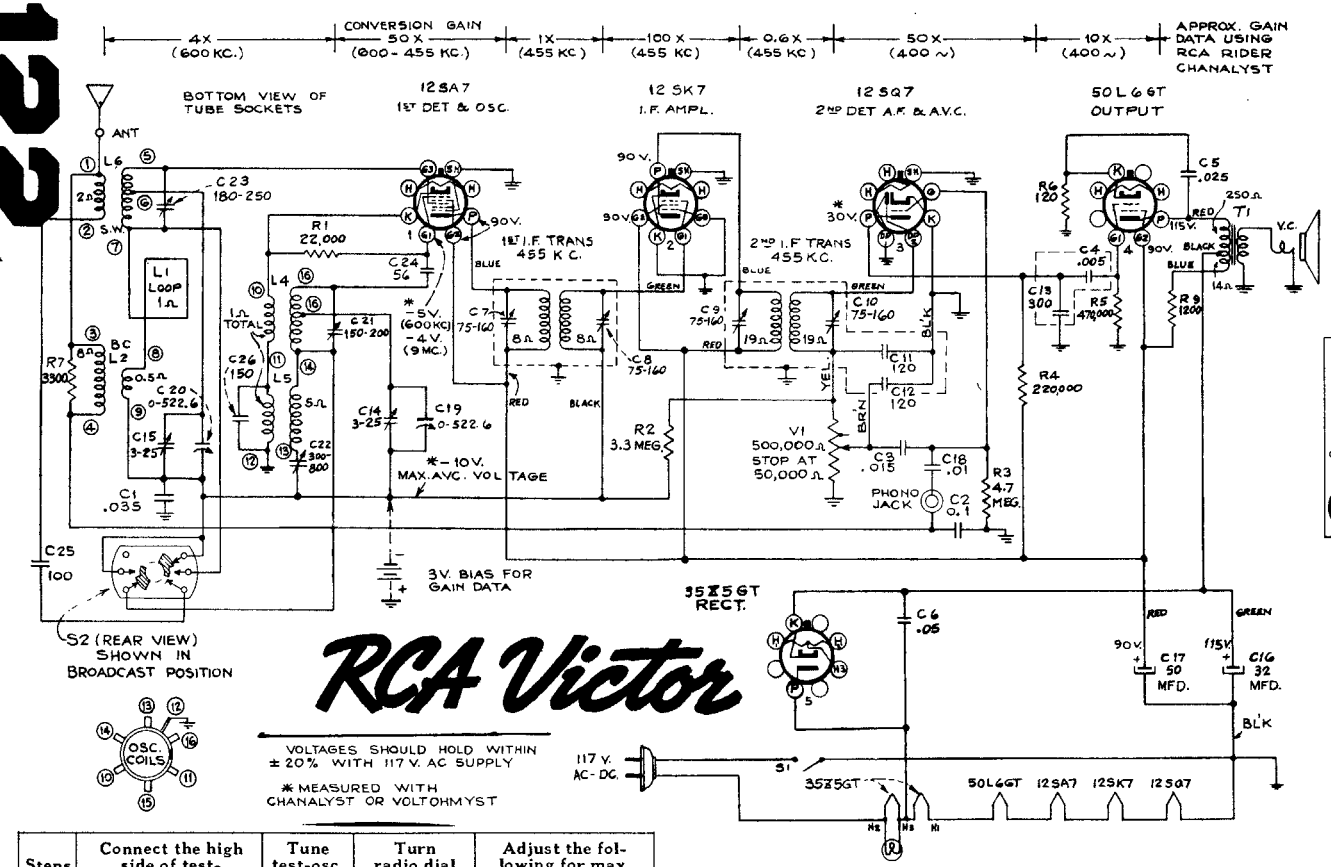

RCA Victor

VOLTAGES SHOULD HOLD WITHIN ± 20% WITH 117 V. AC SUPPLY

* MEASURED WITH CHANALYST OR VOLTOHMYST

Steps	Connect the high side of test-oscillator to—	Tune test-osc. to—	Turn radio dial to—	Adjust the following for max. peak output—
1	12SK7 grid in series with 0.1 mfd.	455 kc	Quiet Point at 1,600 kc end of dial	C10, C9 2nd I-F Transformer
2	12SA7 grid in series with 0.1 mfd.			C8, C7 1st I-F Transformer
3	Antenna term. in series with 47 mmf.	10 mc*	10 mc	C21 (osc.)** C23 (ant.)
4	Antenna term. in series with 200 mmfd.	1,600 kc	1,600 kc	C14 (osc.)
5	Radiation Loop	1,300 kc	Resonance on Signal	C15 (ant.)
6	Radiation Loop	600 kc	600 kc	C22 Osc. Rock in

Alignment Procedure

Output Meter Alignment.—If this method is used connect the meter across the voice coil and turn the receiver volume control to maximum.

Electronic Voltmeter.—The electronic voltmeter in the Chanalyst or VoltOhmyst provides an unexcelled output indicator. It should be connected to the AVC bus.

Test Oscillator.—Connect the low side of the test oscillator to the receiver chassis through a .01 mfd. capacitor. When the electronic voltmeter is used as an alignment indicator the output of the test oscillator should be adjusted to produce several volts of AVC. With the output meter alignment method the test oscillator output should be kept as low as possible.

Calibration Scale.—The glass tuning dial may be easily removed from the cabinet and temporarily attached to the dial backing plate for quick reference during alignment.

* It is recommended that this step be repeated using a received station of known frequency.

** Use minimum capacity if two peaks can be obtained.

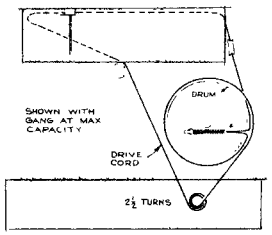

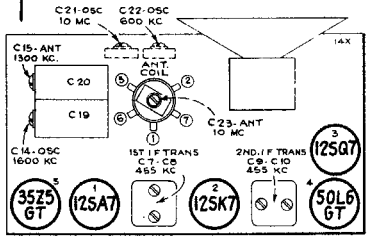

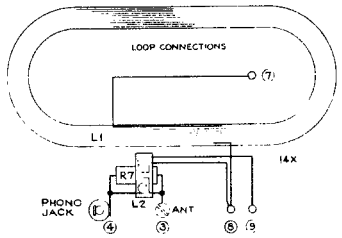

MODEL 14X

Chassis No. RC-1001-D

COMPILED BY M. N. BEITMAN, SUPREME PUBLICATIONS

RCA MODEL 15BP

Alignment Procedure

Output Meter Alignment.—If this method is used, connect the meter across the voice coil, and turn the receiver volume control to maximum.

Test-oscillator.—For all alignment operations, keep the output as low as possible to avoid a-v-c action.

Steps	Connect the high side of test-oscillator to—	Tune test-osc. to—	Turn radio dial to—	Adjust the following for max. peak output—
1	1N5GT I-F grid cap, in series with .01 mfd.	455 kc	Quiet point at 1,600 kc end of dial	L8, L7 (2nd.transformer)
2	1A7GT 1st-Det. grid cap, in series with .01 mfd.			L4, L3 (1st I-F transformer)
3	radiated signal 1,720 kc		signal frequency	C22 (Osc. Trimmer)
4	radiated signal 1,400 kc			C20 (Ant. Trimmer)
5	radiated signal near 600 kc			L6 (Rock in)
6	Repeat steps 3, 4 and 5 until aligned.			

Frequency Range ..... 540-1,720 kc
Intermediate Frequency ..... 455 kc

RCA Tube Complement
(1) RCA-1A7-GT ..... 1st.-Det.—Osc.
(2) RCA-1N5-GT ..... I-F Amplifier
(3) RCA-1H5-GT ..... 2nd-Det., A-F, and A.V.C.
(4) RCA-3Q5-GT ..... Output
(5) RCA-35Z5-GT ..... Rectifier

Line Current Supply
110 to 125 volts, AC 50 or 60 cycles, or DC

Batteries Required
"A" one 1.5 volt dry plug-in type "A," (Eveready No. 743 or equivalent)
"B" two 45 volt dry plug-in type "B," (Eveready No. 482 or equivalent)

Current Consumption
"A" 0.25 amperes
"B" 11.5 milliamperes } ..... Battery Operation

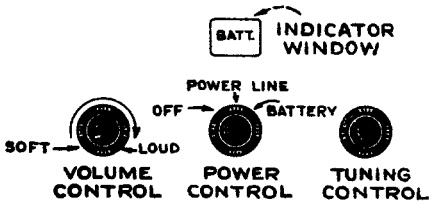

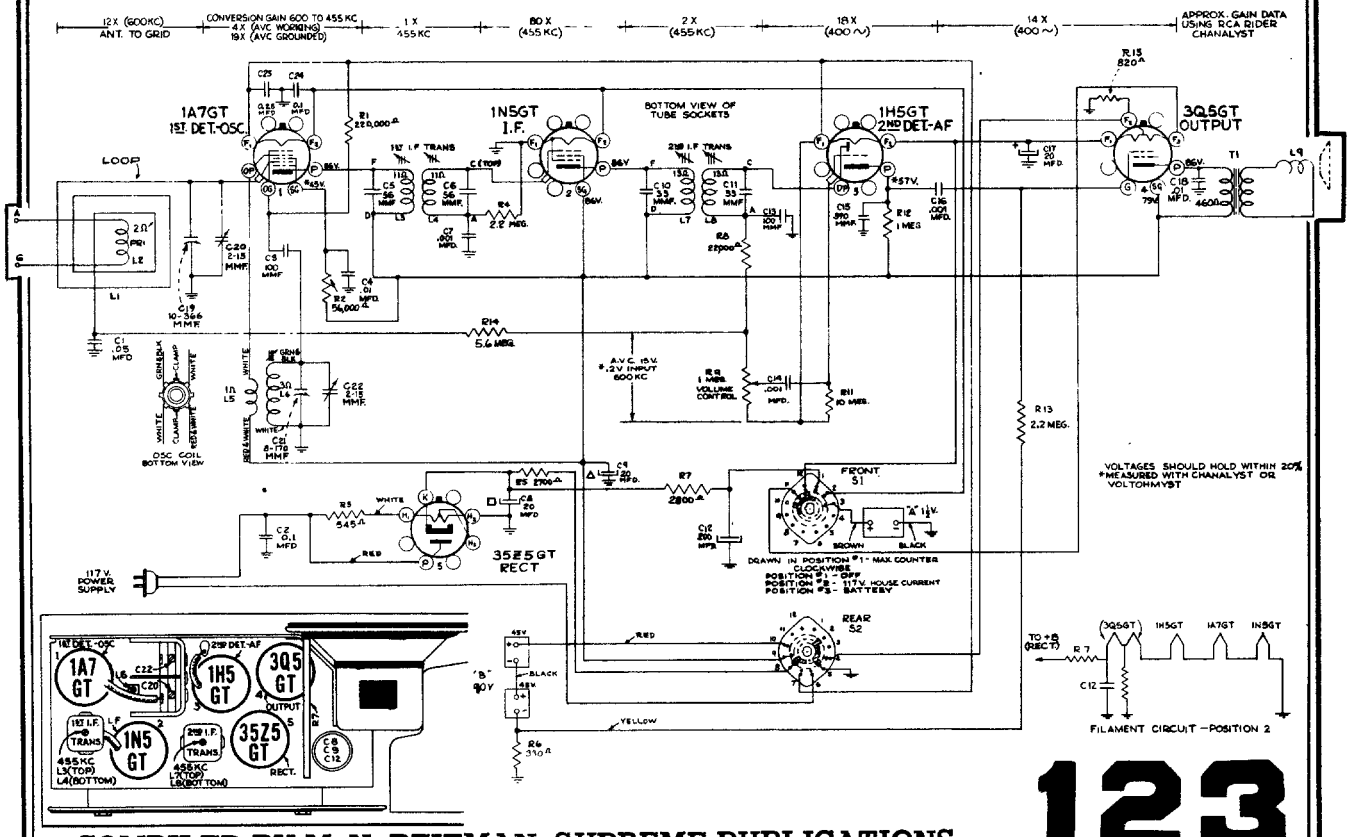

MODELS 15X, 16X-1, 16X-2 and 16X-3

Chassis Nos. RC-462, RC-462A and RC-462B

Six-Tube, Single-Band, AC-DC, Superheterodyne Receivers

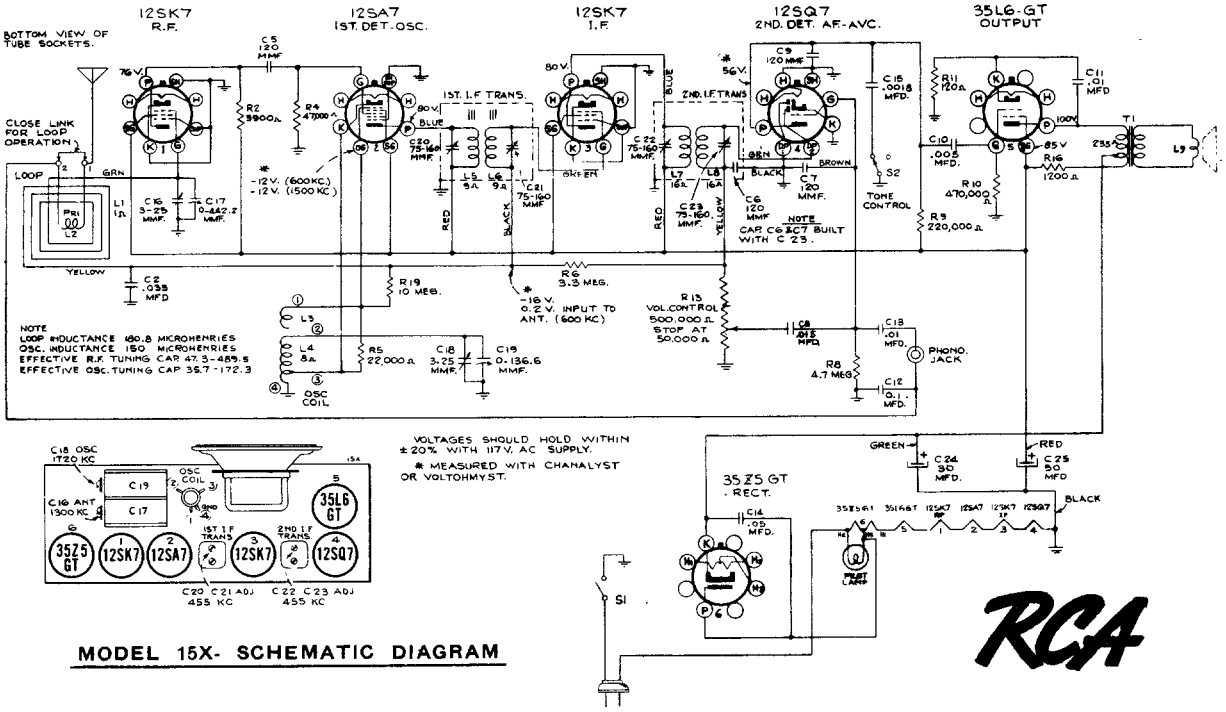

MODEL 15X- SCHEMATIC DIAGRAM

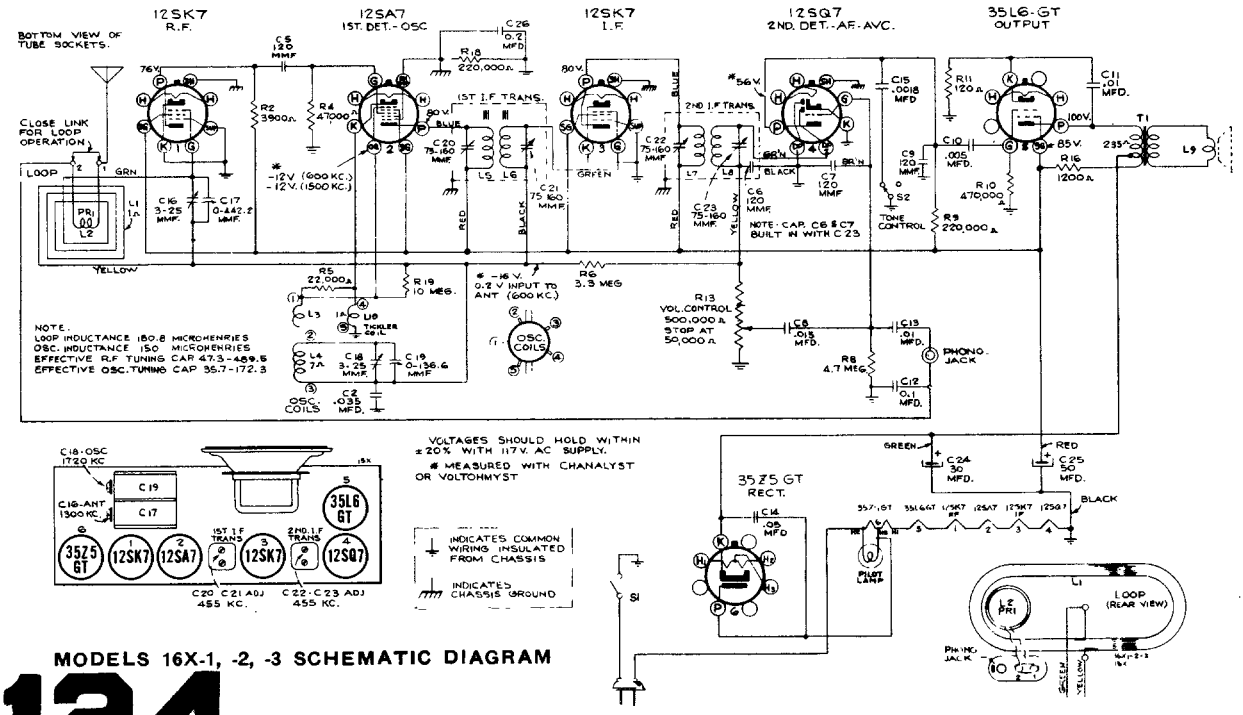

MODELS 16X-1, -2, -3 SCHEMATIC DIAGRAM

COMPILED BY M. N. BEITMAN, SUPREME PUBLICATIONS

Models 16K and 16T3

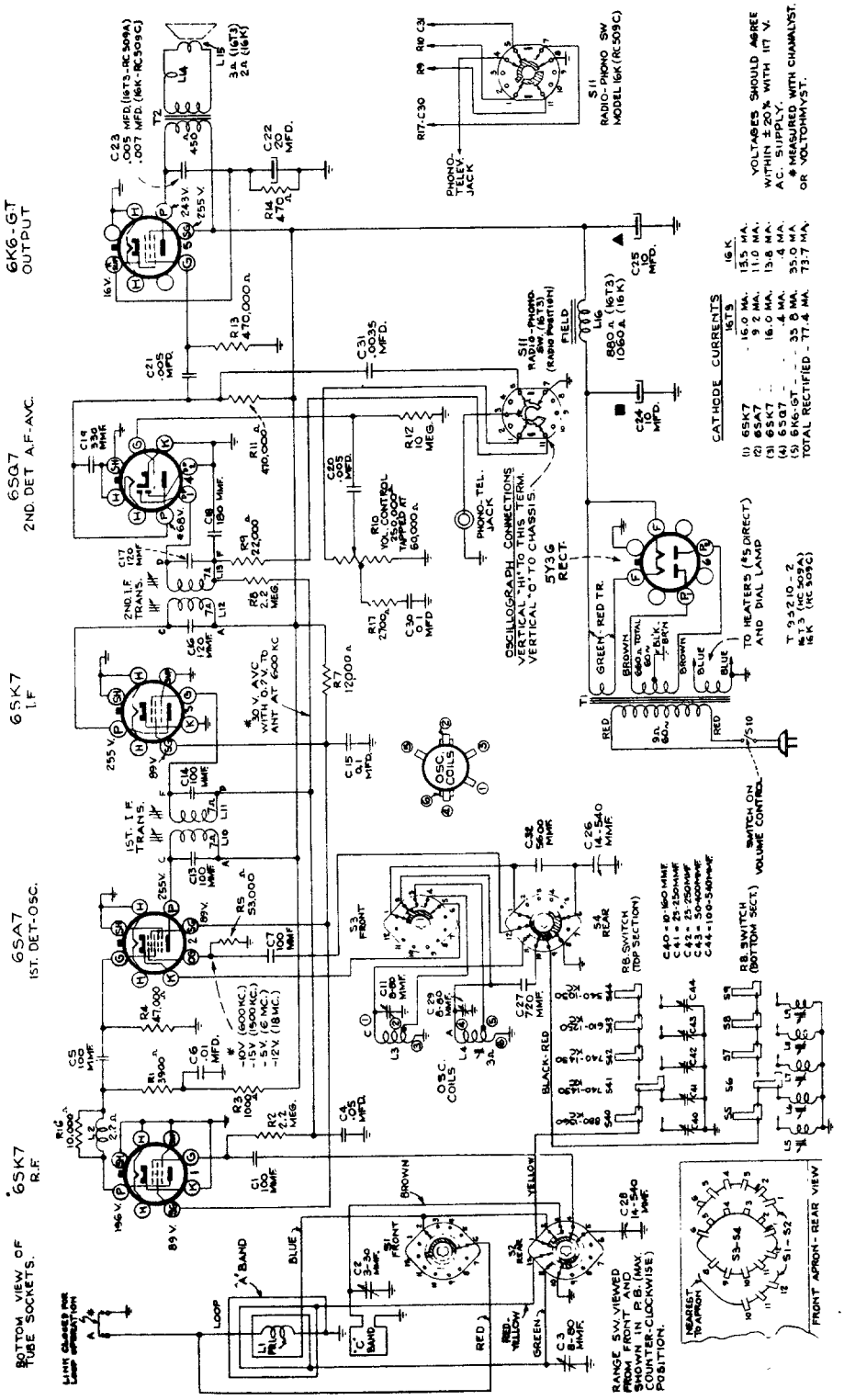

Alignment Procedure

Cathode-Ray Alignment is the preferable method. Connections for the oscillograph are shown in the schematic diagrams.

Output Meter Alignment.—If this method is used, connect the meter across the voice coil, and turn the receiver volume control to maximum.

Test-Oscillator.—For all alignment operations, connect the low side of the test-oscillator to the receiver chassis, and keep the output as low as possible to avoid a-v-c action.

Electronic Voltmeter.—The electronic voltmeter in the Chanalyst or Volt Ohmyst provides an unexcelled output indicator. It should be connected to the AVC bus, and the test-oscillator output adjusted to produce several volts of AVC.

Calibration Scale.—The glass tuning dial may be easily removed from the cabinet and temporarily attached to the chassis for quick reference during alignment. In the event that only the chassis is returned for service, and the cabinet with its tuning dial is left in the customer's home, the calibration scale printed in this service note can be used in conjunction with an ordinary 12-inch ruler as an accurate and convenient substitute for the regular dial.

Each method is described below.

Using Tuning Dial.—

1. Slide out the flat spring clamp at each end of the dial, and remove the glass dial from the cabinet.
2. With gang in full mesh, move the dial pointer to the reference mark at the left-hand end of the dial backing plate.
3. Place the glass dial under the pointer so that the extreme left scale graduations coincide with the pointer. Use scotch tape to hold the glass dial in this position.
4. After completion of alignment, replace the glass dial in cabinet, taking care that the fibre light shields are in correct position at ends of dial.

Using Calibration Scale.—

1. With gang in full mesh, move the dial pointer to the reference mark at the left-hand end of the dial backing plate.
2. Place a flat 12-inch ruler on the dial backing plate so the left-end of ruler is at the reference mark at left-end of backing plate. Temporarily fasten the ruler with scotch tape to the backing plate.
3. Refer to calibration scale printed in this service note. This is a reduced reproduction of the dial with an inch-scale drawn at top and bottom. To find the correct pointer position in inches for any desired frequency, draw a vertical line through this frequency on the calibration scale. For example, 1,500 kc is approximately 4 inches from the reference mark.

Dial-Pointer Adjustment.—After the chassis is replaced in cabinet, move the dial pointer (if necessary) so that it is at the left-hand graduation on the dial with the gang in full mesh.

Steps	Connect the high side of the test-osc. to—	Tune test-osc. to—	Turn radio dial to—	Adjust the following for maximum peak output—
1	I-F grid, in series with .01 mfd.	455 kc	"A" band, Quiet Point at 1,500 kc end of dial	L7 and L8 (2nd I.F. Trans.)
2	1st det. grid, in series with .01 mfd.			L5 and L6 (1st I.F. Trans.)
3	Antenna terminal, in series with 300 ohms (link open)	15.2 mc	15.2 mc "C" band	C11 (osc.)* C2 (ant.)
4	Antenna terminal, in series with 200 mmfd. (link open)	1,500 kc	1,500 kc "A" band	C29 (osc.) C3 (ant.)
5		600 kc	600 kc "A" band	L3 (in 16T2) L4 (in 16K and 16T2) Rock in
6	Repeat steps 4 and 5.			

In case of instability during R-F alignment, connect a 27,000 ohm ¼ watt resistor across "D" and "F" of 2nd I-F transformer.

* Use **minimum** capacity peak if two peaks can be obtained. Check to determine that the correct peak has been used, by tuning receiver to 14.29 mc, where a weaker signal should be received.

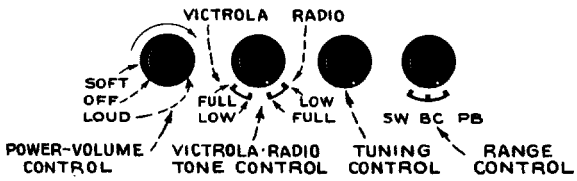

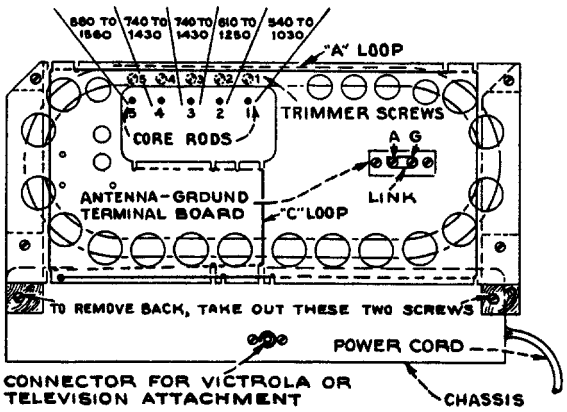

RCA Manufacturing Co.
Camden, N. J.

Models 16K and 16T3

COMPILED BY M. N. BEITMAN, SUPREME PUBLICATIONS

RCA Victor

16X-4

Chassis No. RC-462-C

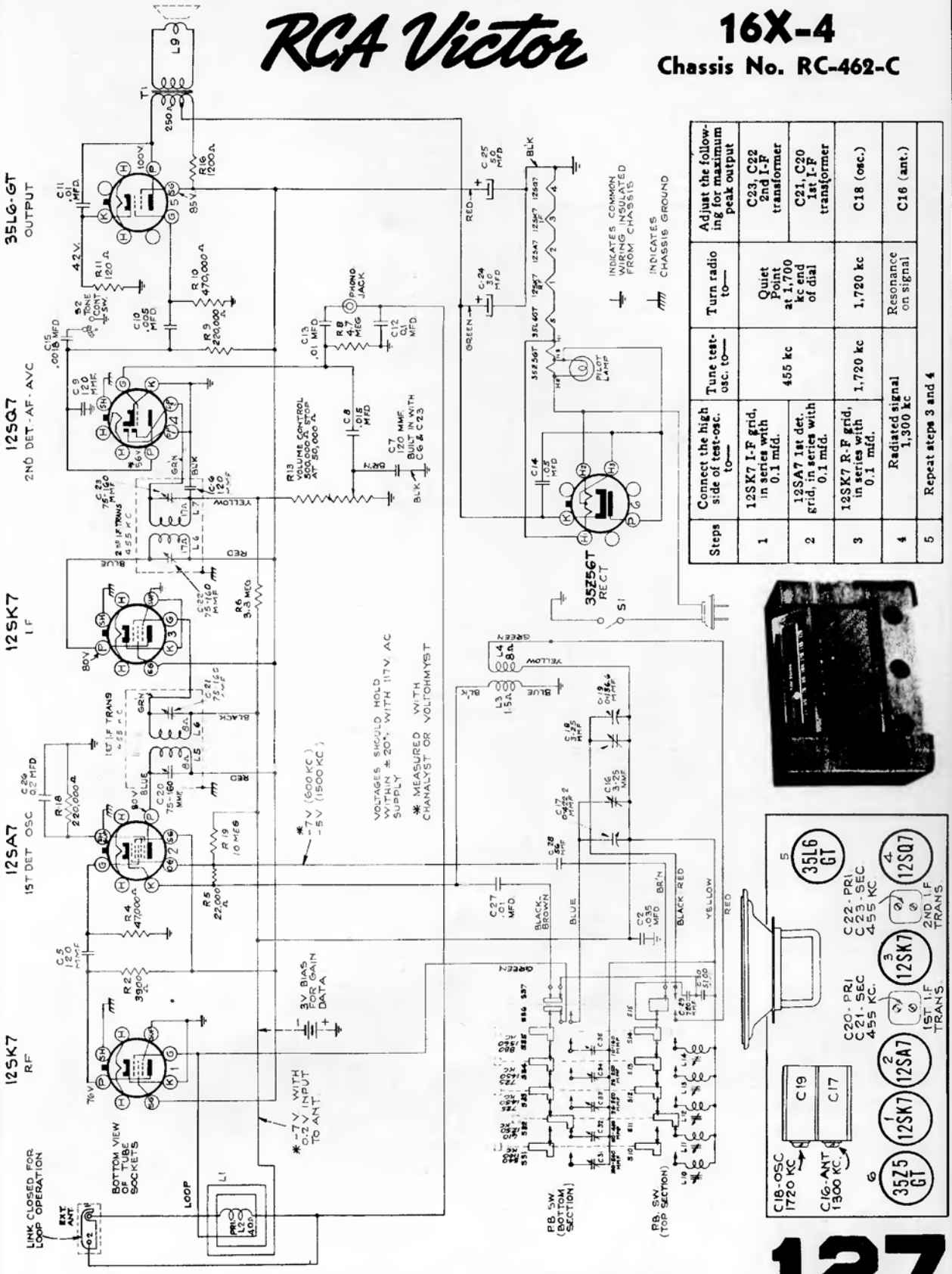

Steps	Connect the high side of test-osc. to—	Tune test-osc. to—	Turn radio to—	Adjust the following for maximum peak output
1	12SK7 I-F grid, in series with 0.1 mfd.	455 kc	Quiet Point at 1,700 kc end of dial	C23, C22 2nd I-F transformer
2	12SA7 1st det. grid, in series with 0.1 mfd.			C21, C20 1st I-F transformer
3	12SK7 R-F grid, in series with 0.1 mfd.	1,720 kc	1,720 kc	C18 (osc.)
4	Radiated signal 1,300 kc		Resonance on signal	C16 (ant.)
5	Repeat steps 3 and 4			

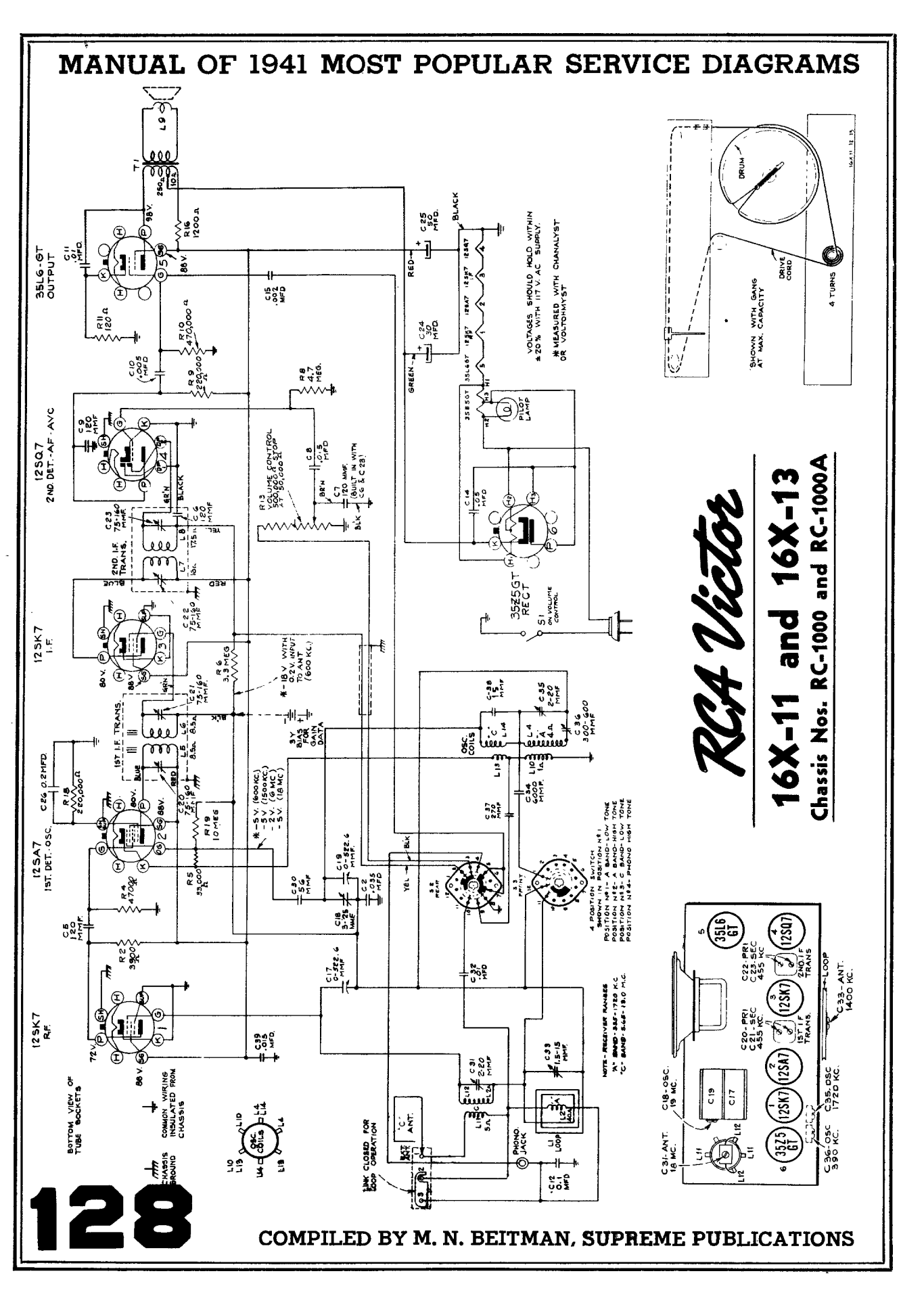
RCA Victor
16X-11 and 16X-13
Chassis Nos. RC-1000 and RC-1000A
35L6-GT OUTPUT
12SQ7 2ND. DET.-AF-AVC
12SK7 I.F.
12SA7 1ST. DET.-OSC.
12SK7 R.F.
35Z5GT RECT
VOLTAGES SHOULD HOLD WITHIN ±20% WITH 117 V. AC SUPPLY.
* MEASURED WITH CHANALYST OR VOLTOHMYST
DRUM
DRIVE CORD
4 TURNS
SHOWN WITH GANG AT MAX. CAPACITY
BOTTOM VIEW OF TUBE SOCKETS
COMMON WIRING INSULATED FROM CHASSIS
CHASSIS GROUND
LOOP
PHONO JACK
LINK CLOSED FOR LOOP OPERATION
NOTE - RECEIVER RANGES
"A" BAND - 535-1750 KC.
"C" BAND - 5.46-18.0 MC.
4 POSITION SWITCH SHOWN IN POSITION #1
POSITION #1 - A BAND-LOW TONE
POSITION #2 - A BAND-HIGH TONE
POSITION #3 - C BAND-LOW TONE
POSITION #4 - PHONO HIGH TONE
C18-OSC. 18 MC.
C31-ANT. 18 MC.
C20-PRI C21-SEC 455 KC.
C22-PRI C23-SEC 455 KC.
2ND I.F. TRANS.
1ST I.F. TRANS.
C33-ANT. 1400 KC.
C35-OSC 1720 KC.
C36-OSC 390 KC.
35L6 GT
12SQ7
12SK7
12SA7
12SK7
35Z5 GT

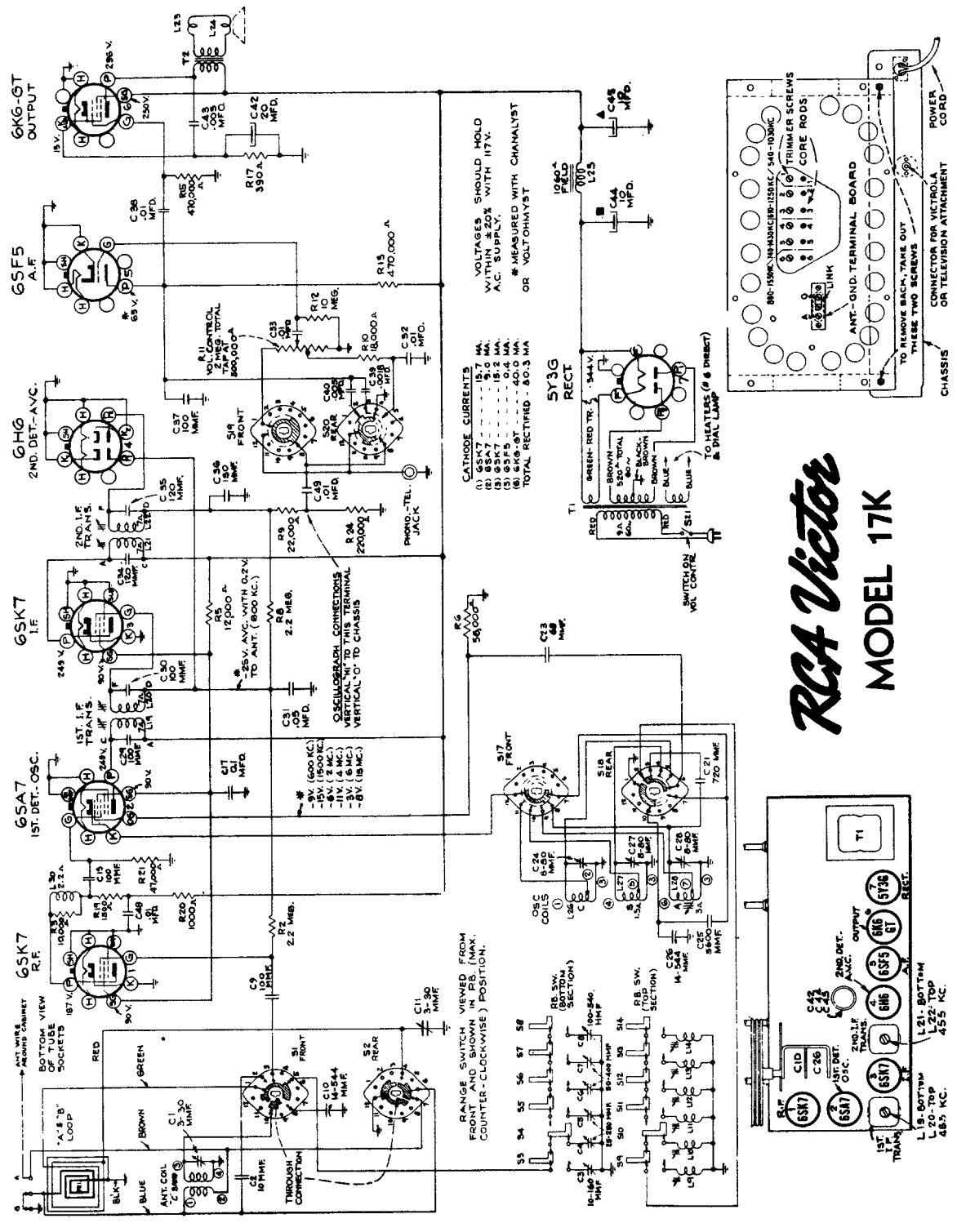
RCA Victor
MODEL 17K
6K6-GT OUTPUT
6SF5 A.F.
6H6 2ND. DET.-A.V.C.
6SK7 I.F.
6SA7 1ST. DET.-OSC.
6SK7 R.F.
5Y3G RECT.
VOLTAGES SHOULD HOLD WITHIN ±20% WITH 117V. A.C. SUPPLY.
MEASURED WITH CHANALYST OR VOLTOHMYST
CATHODE CURRENTS
TOTAL RECTIFIED - 80.3 MA
OSCILLOGRAPH CONNECTIONS
VERTICAL "H" TO THIS TERMINAL
VERTICAL "O" TO CHASSIS
RANGE SWITCH VIEWED FROM FRONT AND SHOWN IN P.B. (MAX. COUNTER-CLOCKWISE) POSITION.
BOTTOM VIEW OF TUBE SOCKETS
"A" & "B" LOOP
ANT. COIL
THROUGH CONNECTION
PHONO.-TEL. JACK
SWITCH ON VOL. CONTROL
TO HEATERS (# & DIAL LAMP)
TRIMMER SCREWS
CORE RODS
ANT.-GND. TERMINAL BOARD
LINK
TO REMOVE BACK, TAKE OUT THESE TWO SCREWS
CHASSIS
POWER CORD
CONNECTOR FOR VICTROLA OR TELEVISION ATTACHMENT
L21-BOTTOM
L22-TOP
455 KC.
L19-BOTTOM
L20-TOP
485 KC.

MANUAL OF 1941 MOST POPULAR SERVICE DIAGRAMS

Models 45X-16, 45X-17

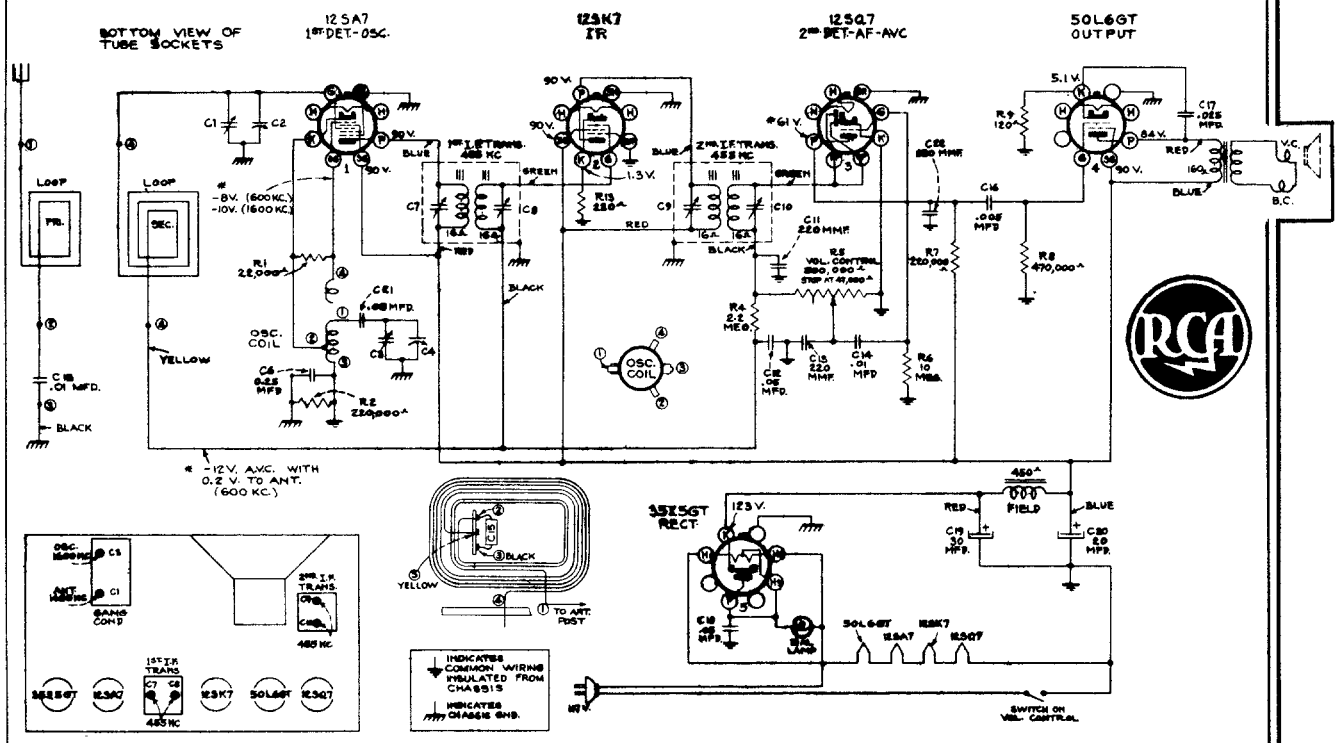

Models 45X3, 45X4 (Chassis No. RC-457E)

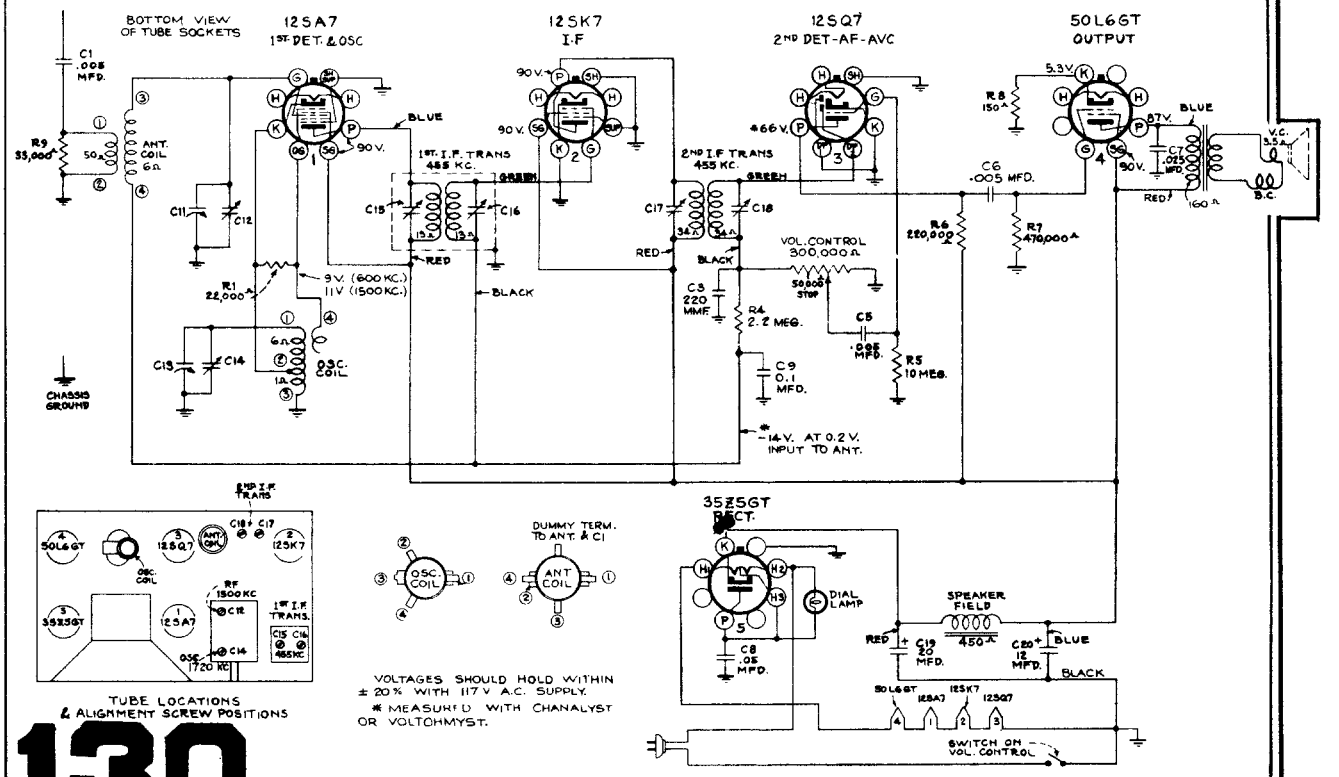

COMPILED BY M. N. BEITMAN, SUPREME PUBLICATIONS

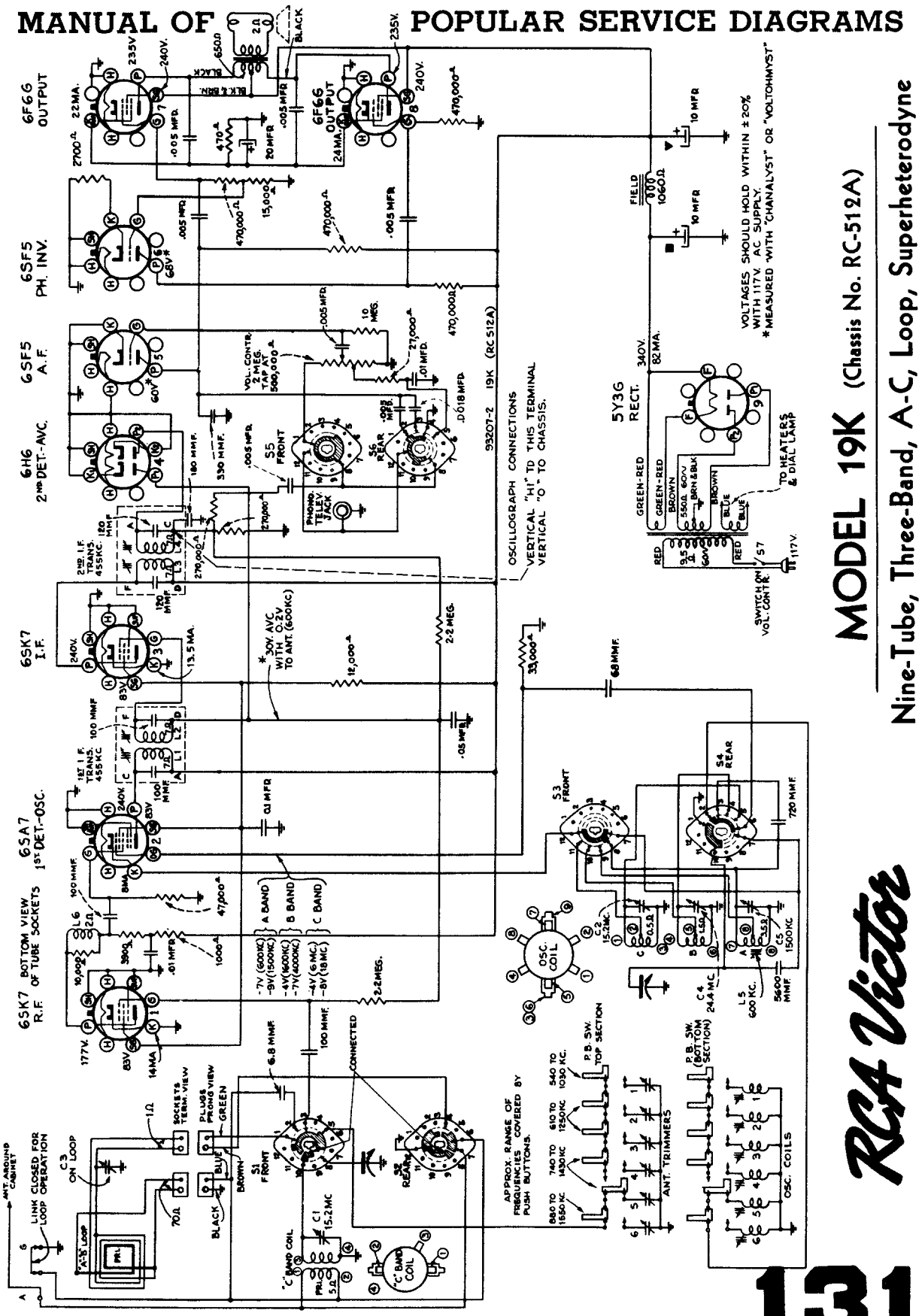

MODEL 19K (Chassis No. RC-512A)

Nine-Tube, Three-Band, A-C, Loop, Superheterodyne

RCA Victor

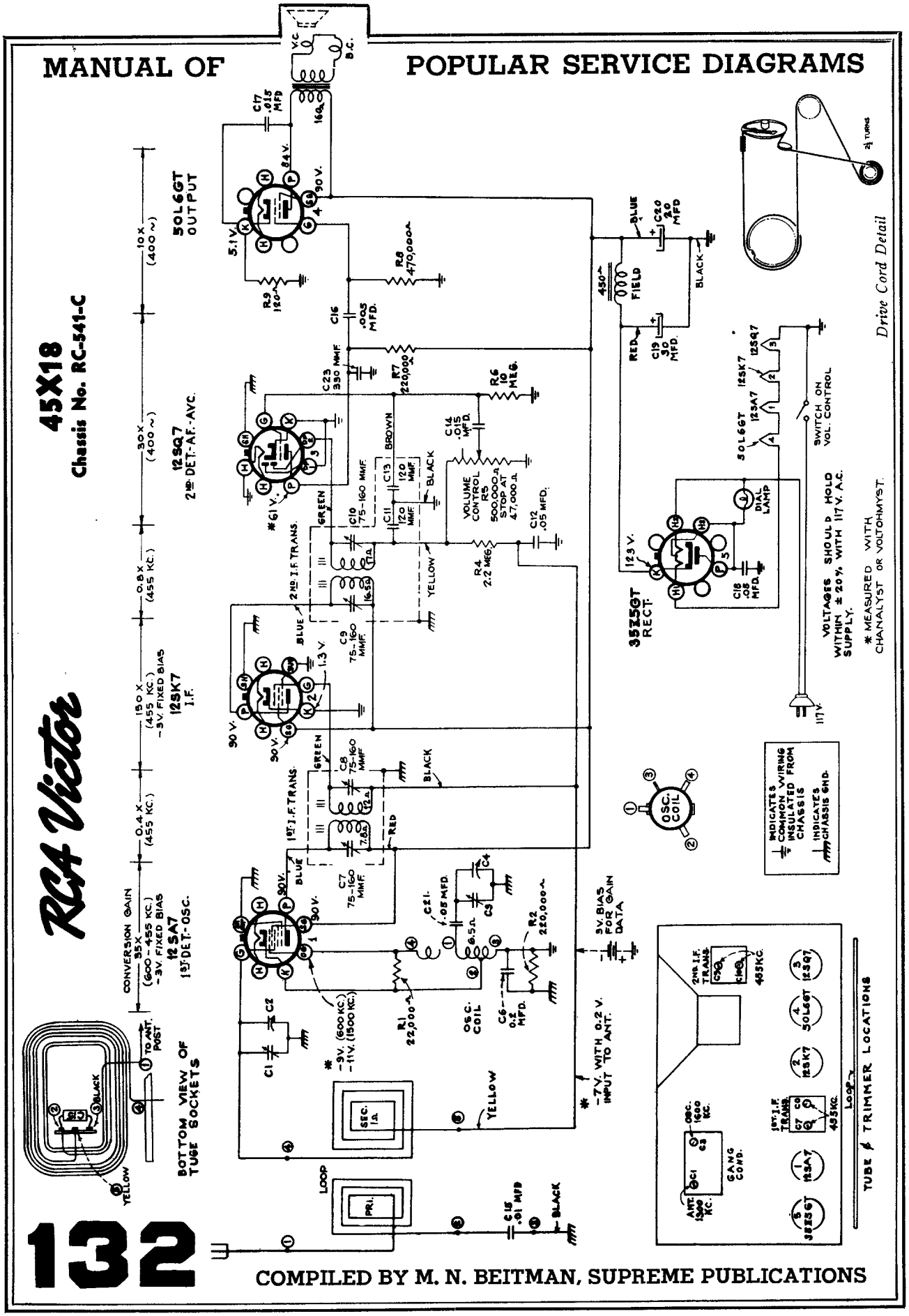
45X18
Chassis No. RC-541-C
RCA Victor
50L6GT OUTPUT
12SQ7 2ND DET.-AF.-AVC.
12SK7 I.F.
12SA7 1ST DET.-OSC.
35Z5GT RECT.
CONVERSION GAIN 35X (600-455 KC.) -3V. FIXED BIAS
0.4X (455 KC.)
150X (455 KC.) -3V. FIXED BIAS
0.8X (455 KC.)
30X (400~)
10X (400~)
BOTTOM VIEW OF TUBE SOCKETS
TO ANT. POST
YELLOW
BLACK
1ST I.F. TRANS.
2ND I.F. TRANS.
VOLUME CONTROL R5 500,000Ω STOP AT 47,000Ω
OSC. COIL
LOOP
PRI.
SEC.
GANG COND.
FIELD
DIAL LAMP
SWITCH ON VOL. CONTROL
VOLTAGES SHOULD HOLD WITHIN ±20% WITH 117 V. A.C. SUPPLY.
* MEASURED WITH CHANALYST OR VOLTOHMYST.
INDICATES COMMON WIRING INSULATED FROM CHASSIS
INDICATES CHASSIS END.
3V. BIAS FOR GAIN DATA
-7V. WITH 0.2 V. INPUT TO ANT.
-9V. (600 KC.) -11V. (1500 KC.)
TUBE & TRIMMER LOCATIONS
Drive Cord Detail

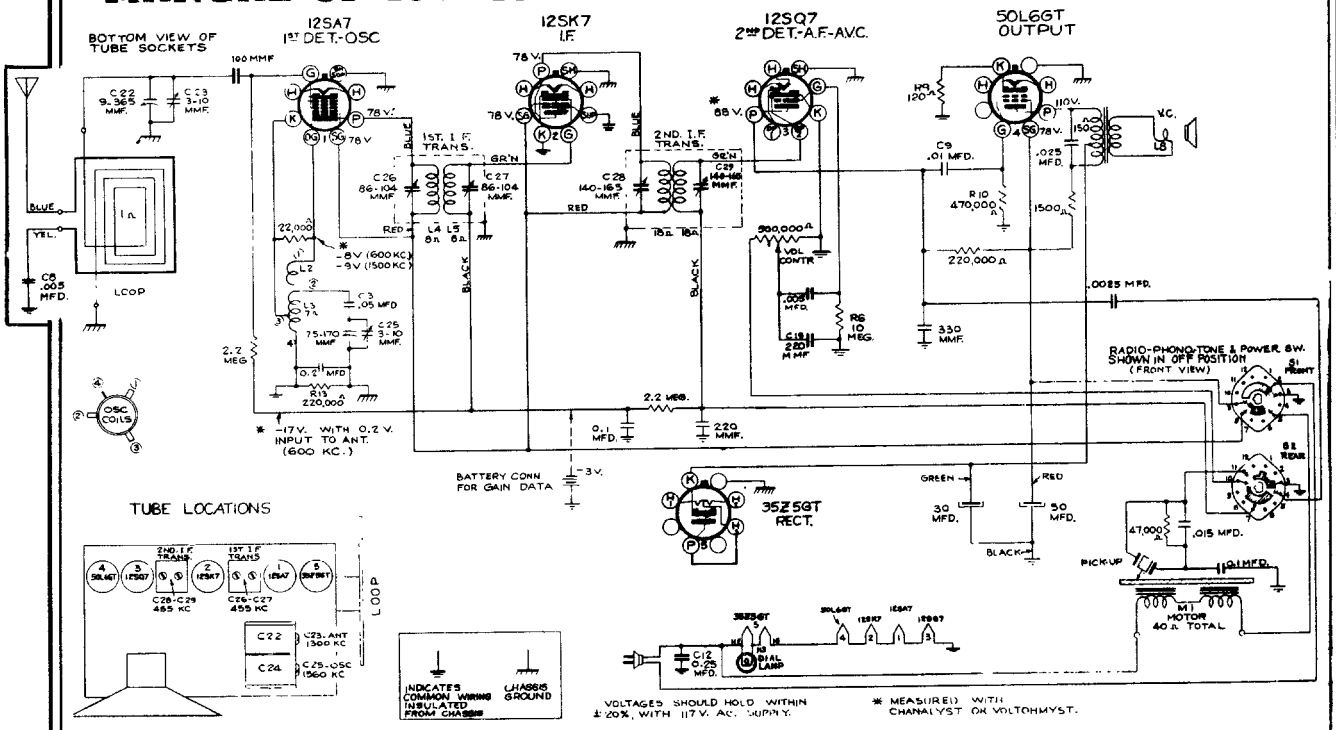

RCA VICTROLA MODEL V-100

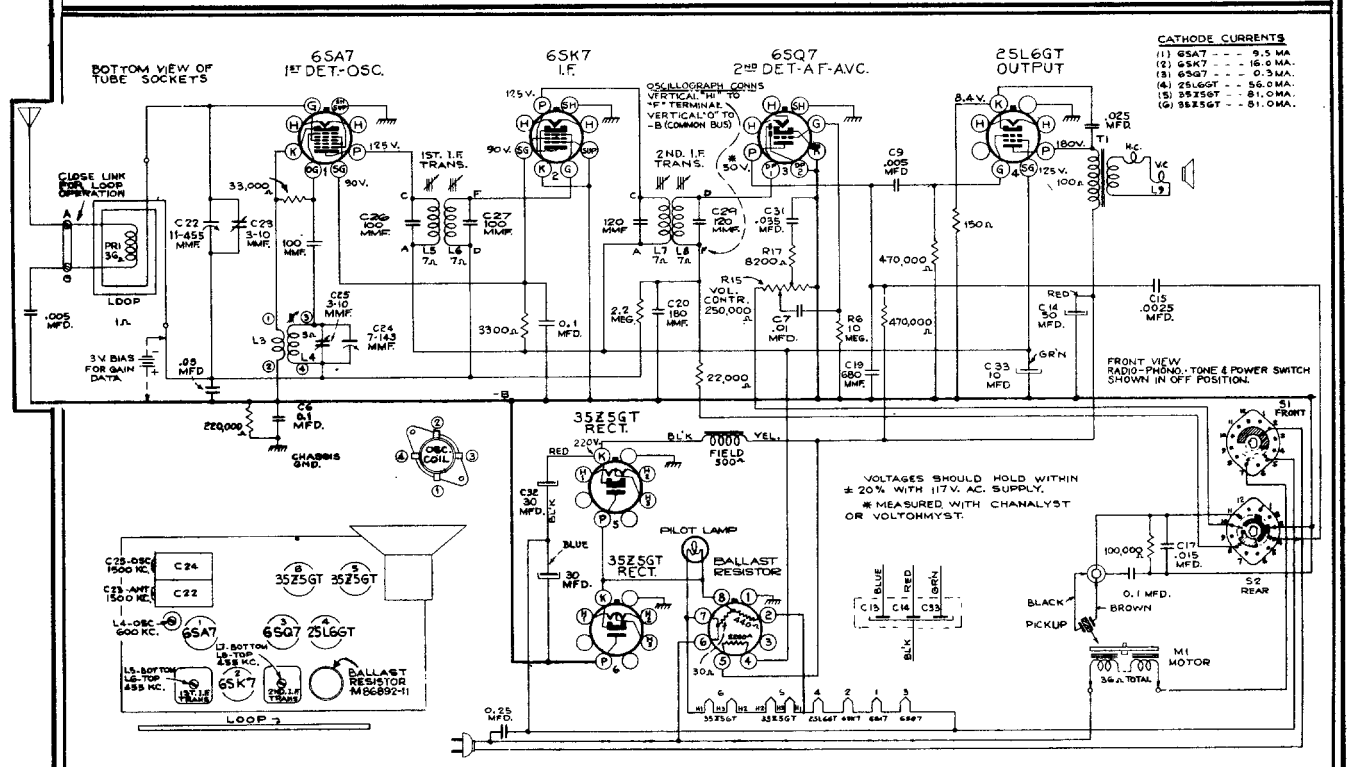

RCA VICTROLA MODEL V-101

Chassis No. RC-540

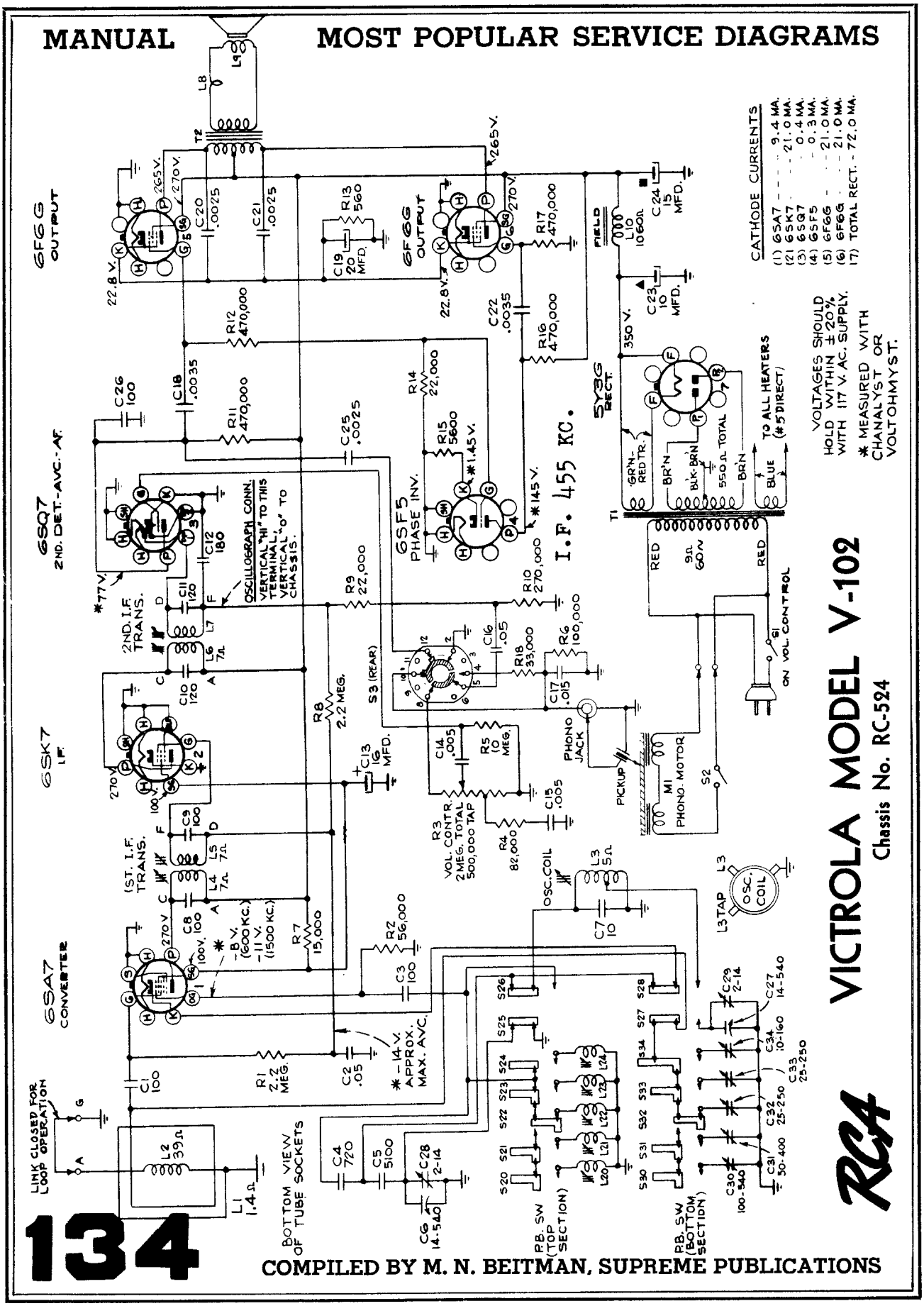
VICTROLA MODEL V-102
Chassis No. RC-524
RCA
I.F. 455 KC.
6FG6 OUTPUT
6SQ7 2ND. DET.-AVC.-AF.
6SK7 I.F.
6SA7 CONVERTER
6SF5 PHASE INV.
5Y3G RECT.
1ST. I.F. TRANS.
2ND. I.F. TRANS.
OSCILLOGRAPH CONN. VERTICAL "HI" TO THIS TERMINAL, VERTICAL "O" TO CHASSIS.
CATHODE CURRENTS
(1) 6SA7 - - - - 9.4 MA.
(2) 6SK7 - - - 21.0 MA.
(3) 6SQ7 - - 0.4 MA.
(4) 6SF5 - - 0.3 MA.
(5) 6FG6 - - 21.0 MA.
(6) 6FG6 - - 21.0 MA.
(7) TOTAL RECT. - 72.0 MA.
VOLTAGES SHOULD HOLD WITHIN ±20% WITH 117 V. AC. SUPPLY.
* MEASURED WITH CHANALYST OR VOLTOHMYST.
TO ALL HEATERS (#5 DIRECT)
VOL. CONTROL
PHONO JACK
PICKUP
PHONO. MOTOR
OSC. COIL
LINK CLOSED FOR LOOP OPERATION
BOTTOM VIEW OF TUBE SOCKETS
P.B. SW. (TOP SECTION)
P.B. SW. (BOTTOM SECTION)

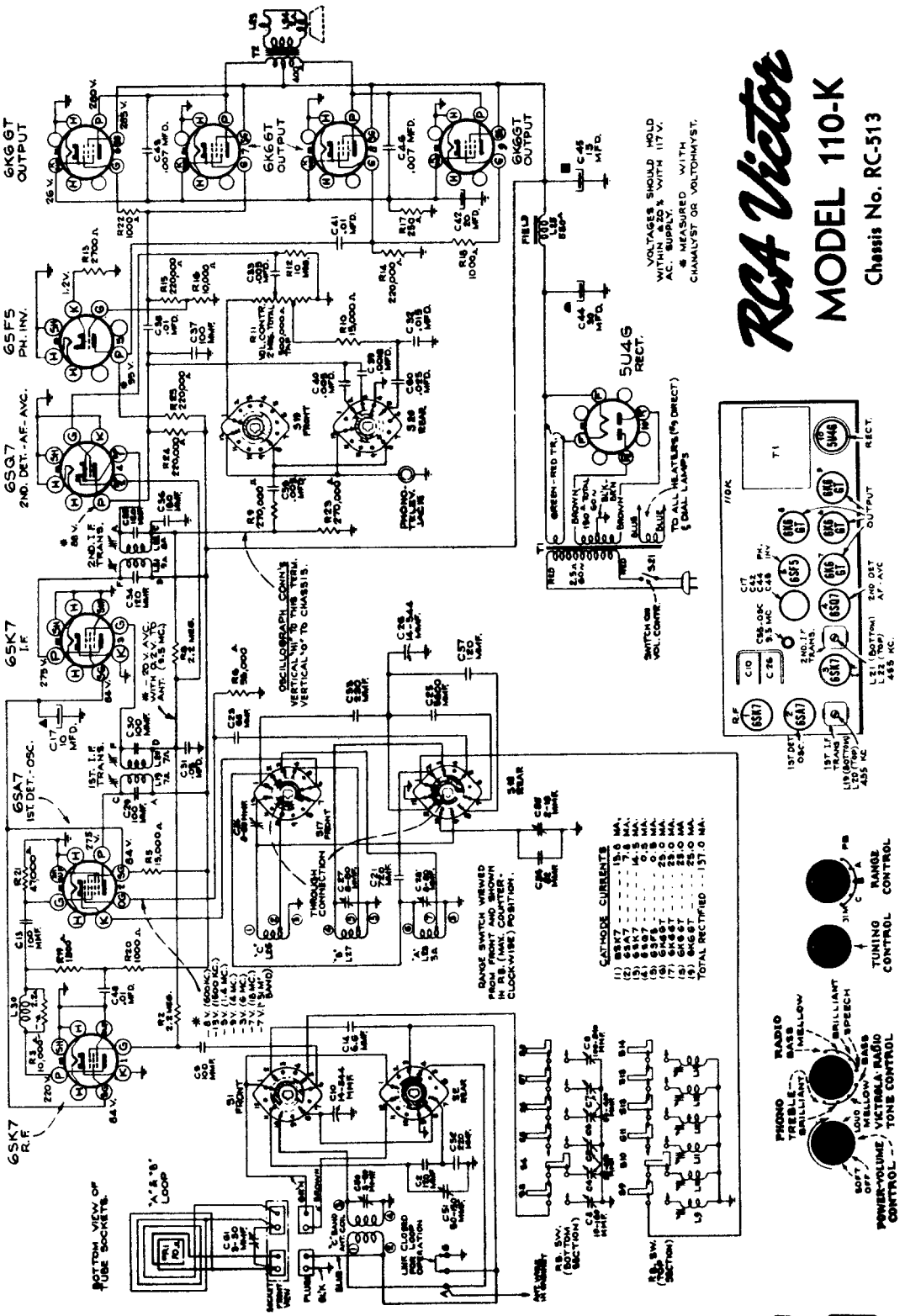
RCA Victor
MODEL 110-K
Chassis No. RC-513
6K6 GT OUTPUT
6K6 GT
6K6GT OUTPUT
6SF5 PH. INV.
6SQ7 2ND. DET.-AF-AVC.
6SK7 I.F.
6SA7 1ST. DET.-OSC.
6SK7 R.F.
5U4G RECT.
VOLTAGES SHOULD HOLD WITHIN ±20% WITH 117 V. A.C. SUPPLY.
* MEASURED WITH CHANALYST OR VOLTOHMYST.
OSCILLOGRAPH CONN'S
VERTICAL "HI" TO THIS TERM.
VERTICAL "LO" TO CHASSIS.
RANGE SWITCH VIEWED FROM FRONT AND SHOWN IN R.B. (MAX. COUNTER-CLOCKWISE) POSITION.
CATHODE CURRENTS
TOTAL RECTIFIED - 157.0 MA.
BOTTOM VIEW OF TUBE SOCKETS.
"A" & "B" LOOP
TUNING CONTROL
RANGE CONTROL
RADIO BASS
PHONO TREBLE
VICTROLA-RADIO TONE CONTROL
POWER-VOLUME CONTROL

Push Button Adjustment

The station push buttons connect to separate magnetite-core oscillator coils and separate antenna trimmers which must be adjusted for the desired stations. Use an insulated screwdriver or alignment tool such as RCA Stock No. 31031. Allow at least five minutes warm-up period before making adjustments.

In the event that the receiver is to be used with an external antenna use one or two feet of wire (as an antenna) to ensure sharp peaking during the final adjustment procedure. For loop operation, the link should be strapped across terminals on back of set. In either case the procedure is as follows:

1. Make a list of the desired stations, arranged in order from low to high frequencies.
2. Turn the range selector to "A" band, and manually tune in the first station on the list.
3. Turn range selector to "PB" position, push in station button No. 1 (extreme left). Then adjust the No. 1 oscillator core (L-14) to receive the station.

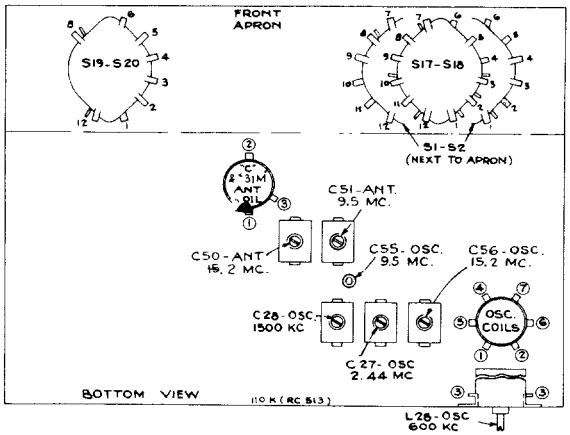

Cathode-Ray Alignment is the preferable method. Connections for the oscillograph are shown in the schematic diagram.

Output Meter Alignment.—If this method is used, connect the meter across the voice coil, and turn the receiver volume control to maximum.

Test-Oscillator.—For all alignment operations, connect the low side of the test-oscillator to the receiver chassis, and keep the output as low as possible to avoid a-v-c action.

Electronic Voltmeter.—The electronic voltmeter in the Chanalyst or Volt Ohmyst provides an unexcelled output indicator. It should be connected to the AVC bus, and the test-oscillator output adjusted to produce several volts of AVC.

Calibration for Alignment.—The dial calibration for alignment purposes can be set up in two ways:

1. The dial may be removed from the cabinet by sliding out the two spring pieces which clamp it in its mounting position. The condenser plates should then be turned into full mesh, the pointer adjusted to the scratch at the left end of the dial backing plate, and the dial placed on the frame so that its extreme left calibration mark coincides with the pointer. The dial may be held in place with scotch tape. In this manner the actual receiver dial is used for alignment. When alignment is finished, the scale should be replaced including the fibre light shields which are folded under the ends of the glass scale.
2. A calibration scale is attached to the tuning drum. The correct setting of the gang, in degrees, for each alignment frequency is given in the alignment table. Check the position of the drum, making sure that the 0 degree scale mark is horizontal with the gang in full mesh.

Pointer for Calibration Scale.—If method (2) is used, improvise a pointer for the calibration scale by fastening a piece of wire to the chassis, and bend the wire so that it points to the 0 degree mark on the calibration scale when the plates are fully meshed.

Spread-Band Alignment.—Make final adjustment of C56 and C50 during actual reception of a station of known frequency near 9.5 megacycles.

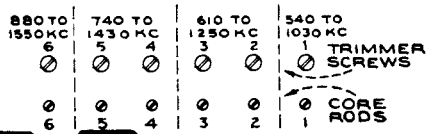

4. After oscillator core is set correctly, adjust C-8 for maximum output.
   Clockwise adjustment of cores and trimmers tunes the circuits to lower frequencies.
5. Adjust for each of the remaining stations in the same manner.
6. Make a final careful adjustment of the oscillator cores and antenna trimmers.

Owing to the relatively high r-f gain, it may be found that a given station can be tuned in at several different settings of the magnetite-core oscillator push-button coils. In such cases, it is advisable to unscrew the loop push-button trimmers to minimum capacity before adjusting the magnetite cores.

On the 880 to 1,550 kc push-button, the higher frequency stations may be received with L-9 either in or out (oscillator frequency either 455 kc below or 455 kc above the station frequency). The adjustment with this core in its out position (oscillator frequency 455 kc above the station frequency) is the correct one.

Steps	Connect the high side of the test-osc. to—	Tune test osc. to—	Turn radio dial to—	Adjust the following for maximum peak output—
1	I-F grid in series with .01 mfd.	455 kc	"C" Band Quiet Point at 18 mc end of dial	L21 and L22 (2nd I.F. Trans.)
2	1st-det. grid in series with .01 mfd.			L19 and L20 (1st I.F. Trans.)
3	Antenna terminal (A), in series with 47 mmfd. (link closed)	15.2 mc	15.2 mc (149°) "C" band	C56 (osc.)* C50 (ant.)** Rock in
4		9.5 mc	9.5 mc (65.5°) "31M" band	C55 (osc.)* C51 (ant.)** Rock in
5	Stator of antenna section of gang, in series with 300 ohms	2.44 mc	2.44 mc (97°) "B" band	C27 (osc.)
6		600 kc	600 kc (30.5°) "A" band	L28 (osc.)
7		1,500 kc	1,500 kc (158°) "A" band	C28 (osc.)
8	Repeat steps 6 and 7.			
9	Fasten chassis in cabinet, see that link is closed on antenna terminal board, indicator at left end of dial scales with gang at maximum capacity.			
10	Radiation loop consisting of two turns of wire 18 inches in diameter located 4 to 6 feet from receiver	1,500 kc	1,500 kc "A" band	C61 (ant.) (mounted on loop)
11		600 kc	600 kc "A" band	L28 (osc.) Rock in
12		Repeat steps 10 and 11		

* Use minimum capacity peak if two peaks can be obtained.
** Use maximum capacity peak if two peaks can be obtained.
NOTE: Oscillator tracks 455 kc above signal on all bands.

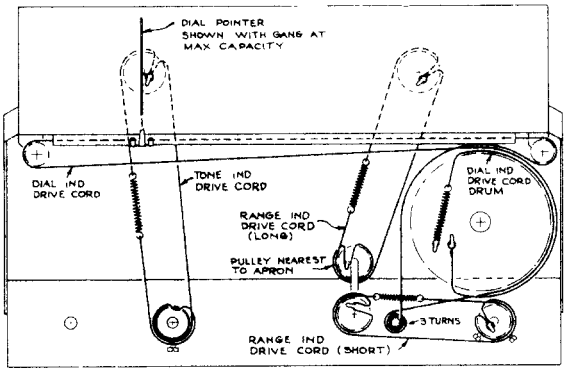

MODEL 110-K

COMPILED BY M. N. BEITMAN, SUPREME PUBLICATIONS

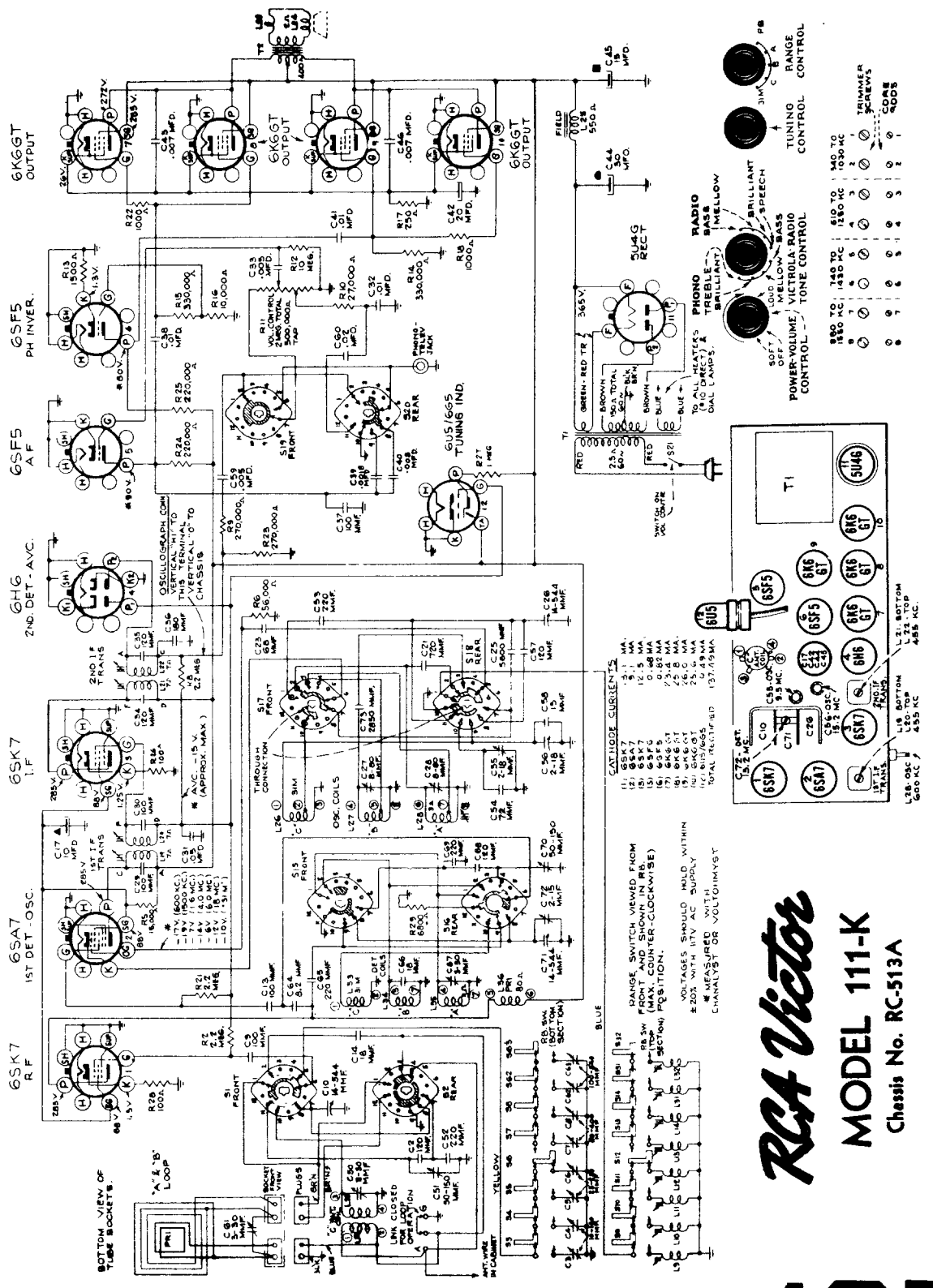
6K6GT OUTPUT
6K6GT OUTPUT
6K6GT OUTPUT
6SF5 PH INVER.
6SF5 A.F.
6H6 2ND. DET.-A.V.C.
6SK7 I.F.
6SA7 1ST DET.-OSC.
6SK7 R.F.
5U4G RECT.
6U5/6E5 TUNING IND.
RADIO BASS TREBLE
PHONO BASS TREBLE
POWER-VOLUME CONTROL
VICTROLA RADIO TONE CONTROL
TUNING CONTROL
RANGE CONTROL
TRIMMER SCREWS
CORE RODS
BRILLIANT
SPEECH
MELLOW
BASS
SOFT
OFF
LOUD
OSCILLOGRAPH CONN.
CATHODE CURRENTS
BOTTOM VIEW OF TUBE SOCKETS
"A" & "B" LOOP
RANGE SWITCH VIEWED FROM FRONT AND SHOWN IN R6 (MAX. COUNTER-CLOCKWISE) POSITION.
VOLTAGES SHOULD HOLD WITHIN ±20% WITH 117V AC SUPPLY
* MEASURED WITH CHANALYST OR VOLTOHMYST
RCA Victor
MODEL 111-K
Chassis No. RC-513A

Sears, Roebuck & Co.

Models 3351, 3451, 3551, 132.802

POSITION OF VARIABLE	FREQUENCY GENERATOR	DUMMY ANTENNA	GENERATOR CONNECTION (High)	GENERATOR CONNECTION (Low)	TRIMMERS ADJUSTED (In order shown)	TRIMMER FUNCTION
Closed	455 kc	.1 mfd.	12A8GT Grid	Var. Cond. Frame	T2, T1	IF
1400 kc	1400 kc	.00005 mfd.	Ant. clip	Chassis Base	C2, C1	Translator
600 kc	600 kc	.00005 mfd.	Ant. clip	Chassis Base	Check Point	- - - -

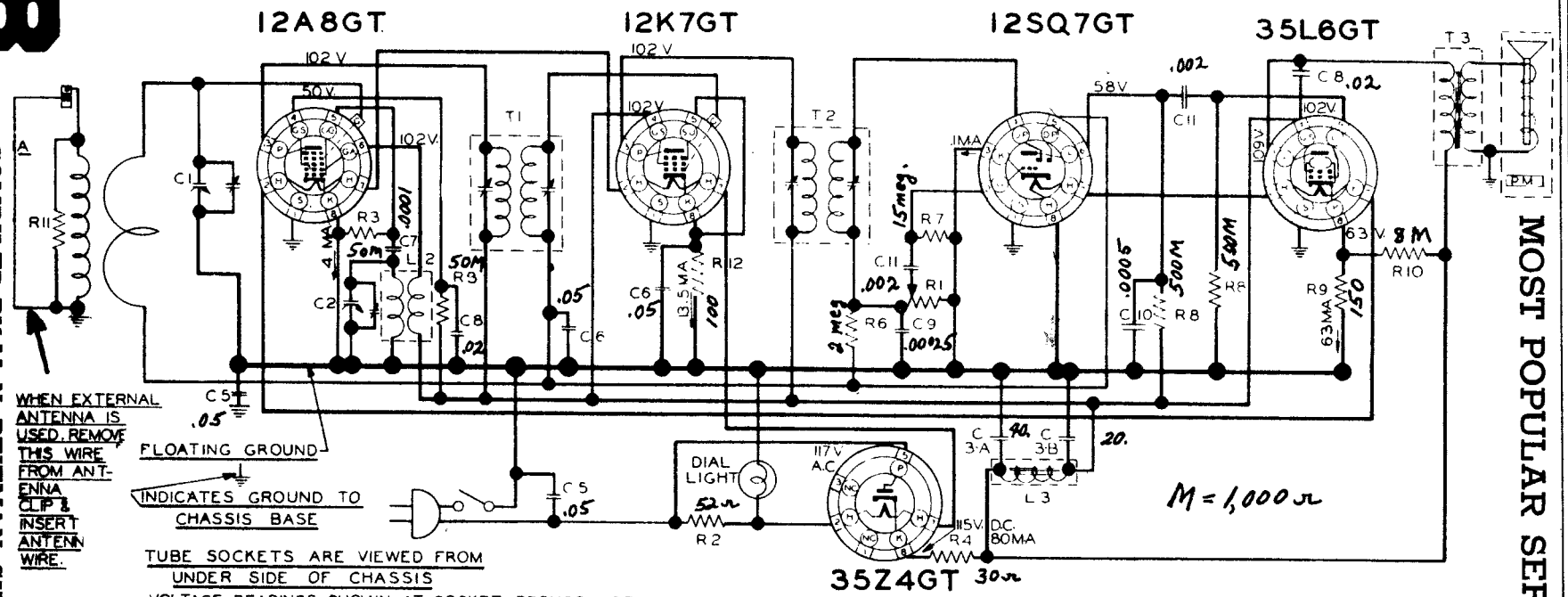

TUBE SOCKETS ARE VIEWED FROM UNDER SIDE OF CHASSIS

VOLTAGE READINGS SHOWN AT SOCKET PRONGS ARE TO FLOATING GROUND AND ARE TAKEN WITH NO SIGNAL. A.C. LINE VOLTAGE AT 117 VOLTS.

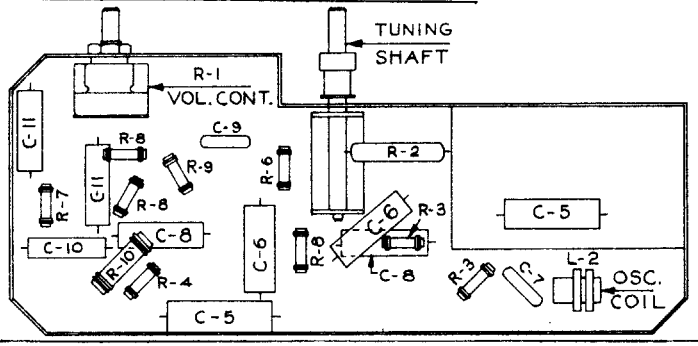

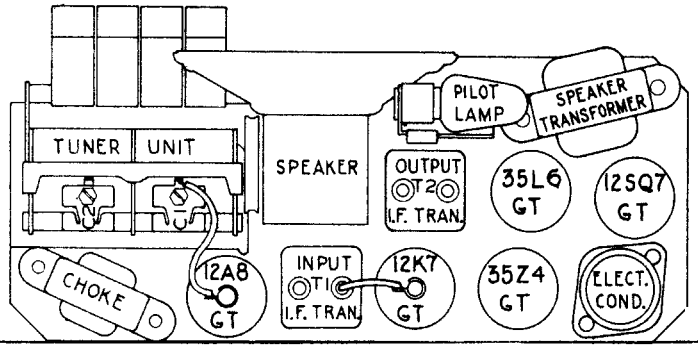

MOST POPULAR SERVICE DIAGRAMS

COMPILED BY M. N. BEITMAN, SUPREME PUBLICATIONS

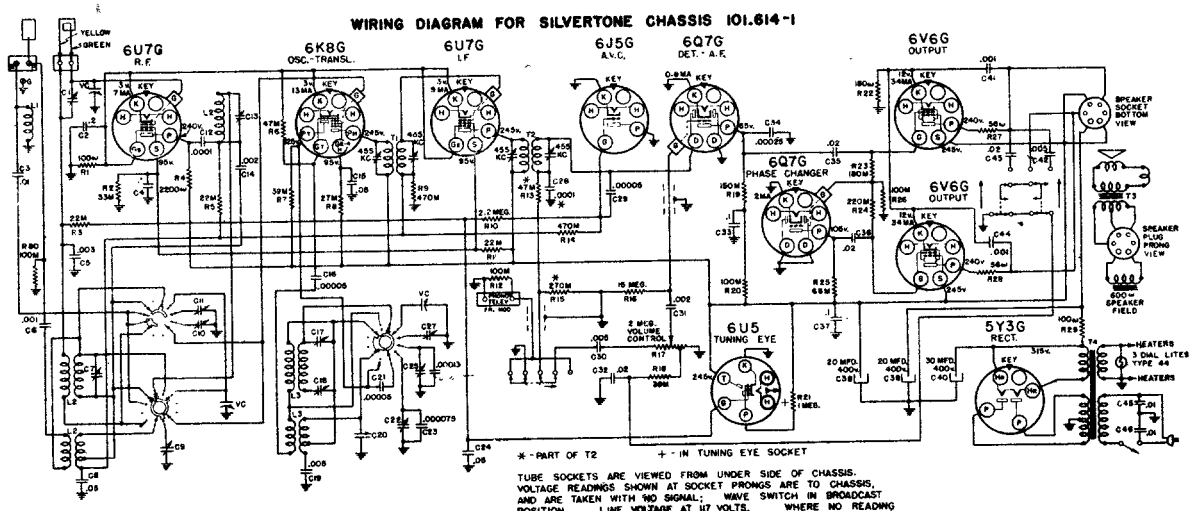

Model R-101

Sears, Roebuck & Co. Chicago.

Model R-111

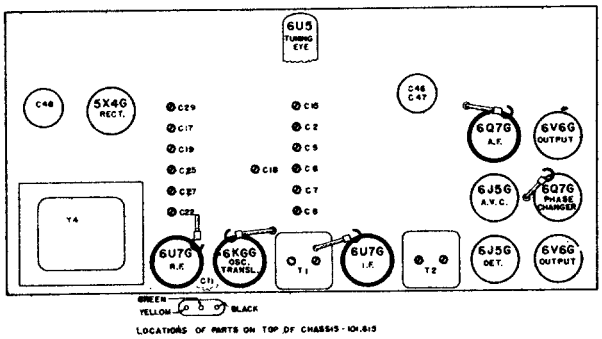

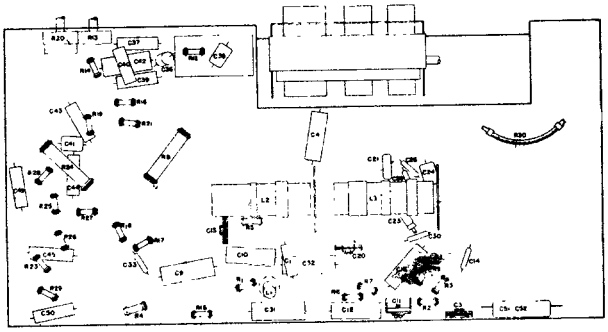

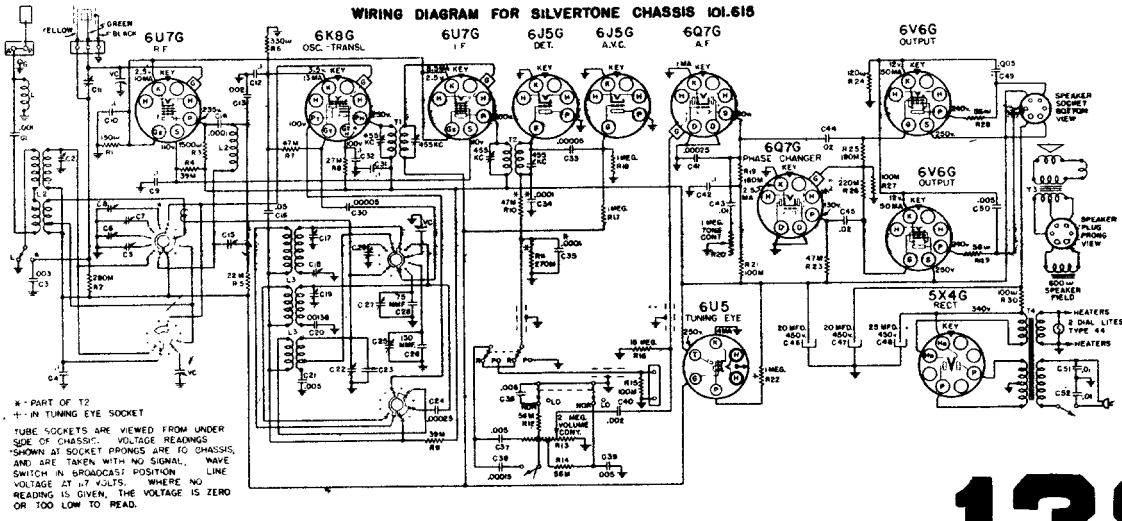

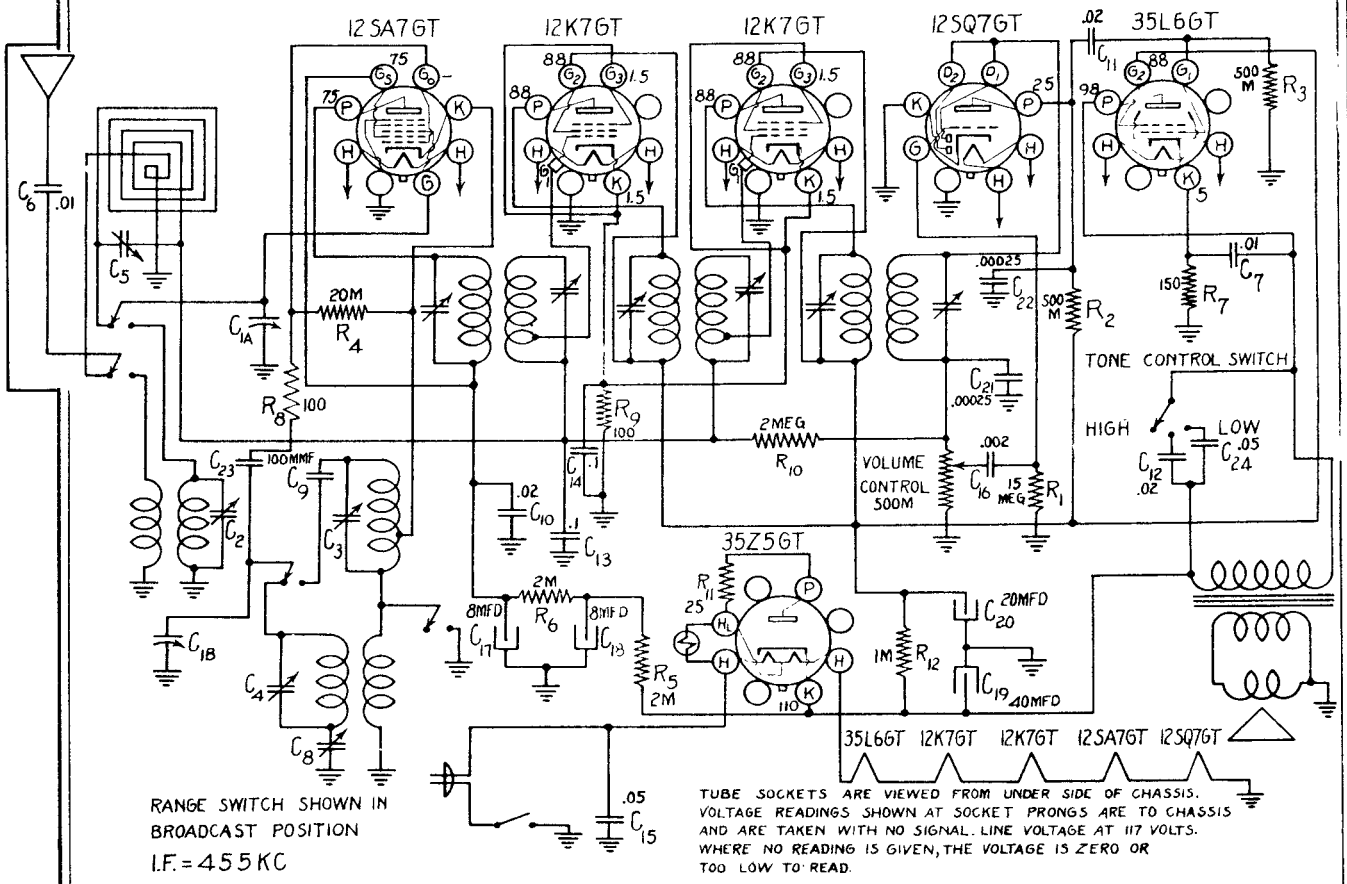

RANGE SWITCH SHOWN IN BROADCAST POSITION

I.F. = 455 KC

TUBE SOCKETS ARE VIEWED FROM UNDER SIDE OF CHASSIS. VOLTAGE READINGS SHOWN AT SOCKET PRONGS ARE TO CHASSIS AND ARE TAKEN WITH NO SIGNAL. LINE VOLTAGE AT 117 VOLTS. WHERE NO READING IS GIVEN, THE VOLTAGE IS ZERO OR TOO LOW TO READ.

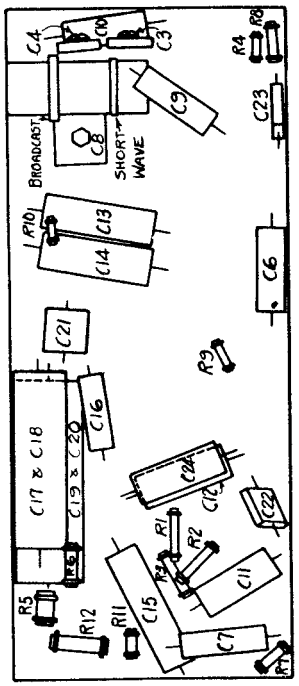

LOUD SPEAKER:
Type . . . Permanent Magnet Dynamic
Size . . . . . 5 inch
Field . . . . . Permanent Magnet

Sears, Roebuck & Co. Chicago.

Models 3361, 3461, 3561, 3621.

Factory No. 109.356

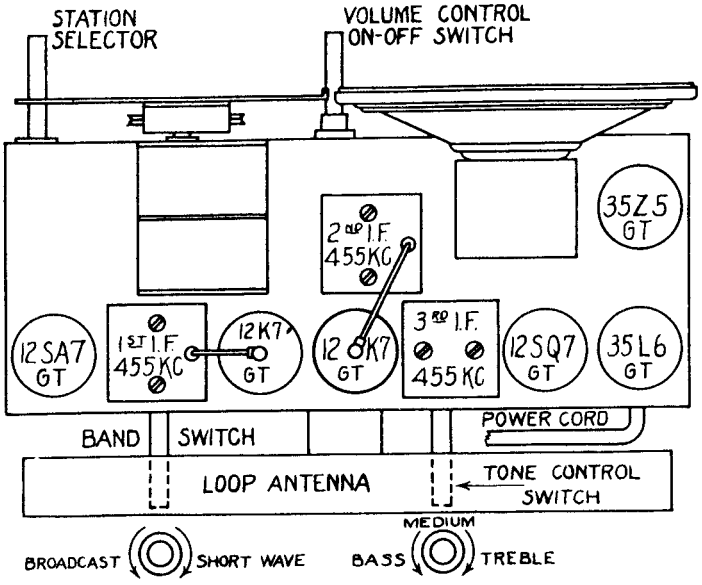

COMPILED BY M. N. BEITMAN, SUPREME PUBLICATIONS

WIRING DIAGRAM FOR GILVERTONE CHASSIS 10L617

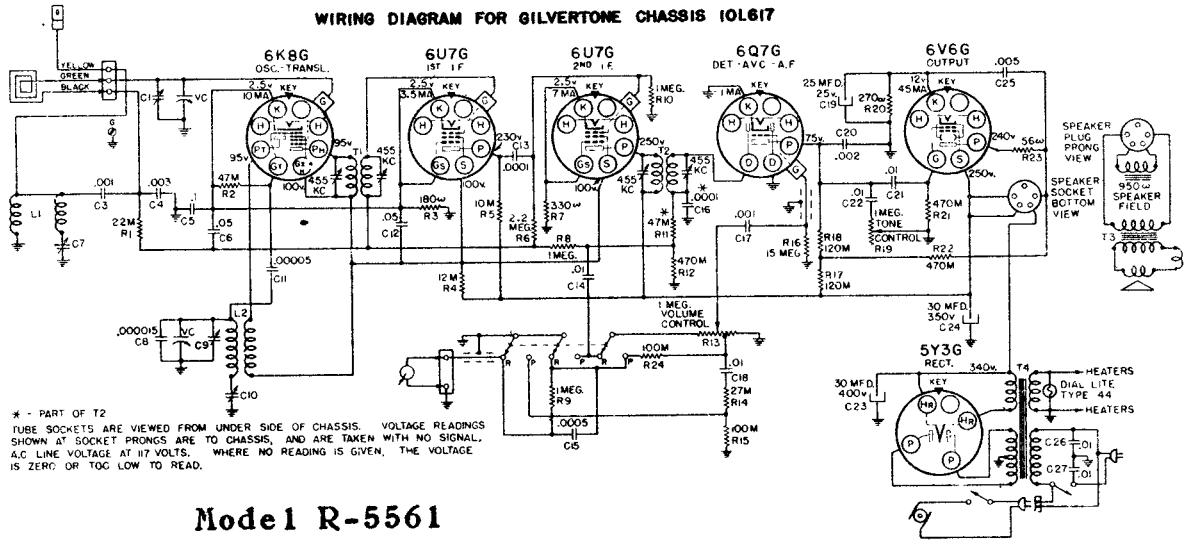

Model R-5561

Sears, Roebuck & Co. Models 5732 and 5732-B
Factory Nos. 109.371 and 109.371-1

These receivers are alike except that the early model C13 is .001 mfd. and C9 is .002 mfd. Also the connection from C13 was connected to the volume control side of C9.

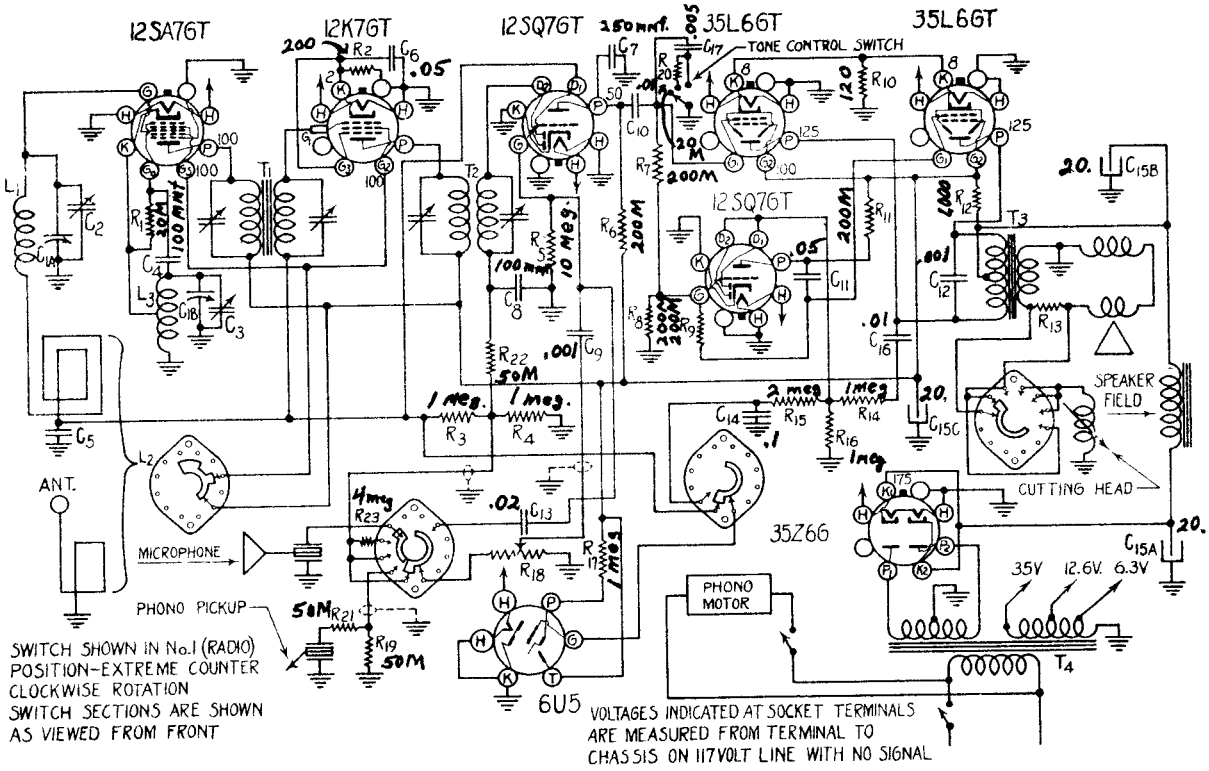

Sears, Roebuck & Co. Models 5601A and 6449

Factory Number 101.628

Intermediate Frequency: 455 KC.

FREQUENCY RANGES:

Band "A"	538-1650 kc
Band "B"	1.45-2.56 mc
Band "C"	5.82-18.3 mc
Band "D"	9.35-9.86 mc
Band "E"	10.89-12.02 mc

ALIGNMENT FREQUENCIES:

Oscillator Trimmer	Antenna-Transl. Trimmer	Padder
1650 kc	1500 kc	600 kc
2.4 mc	2.4 mc	Fixed
18.3 mc	15 mc	Fixed
9.55 mc	9.55 mc	Fixed
11.71 mc	11.71 mc	Fixed

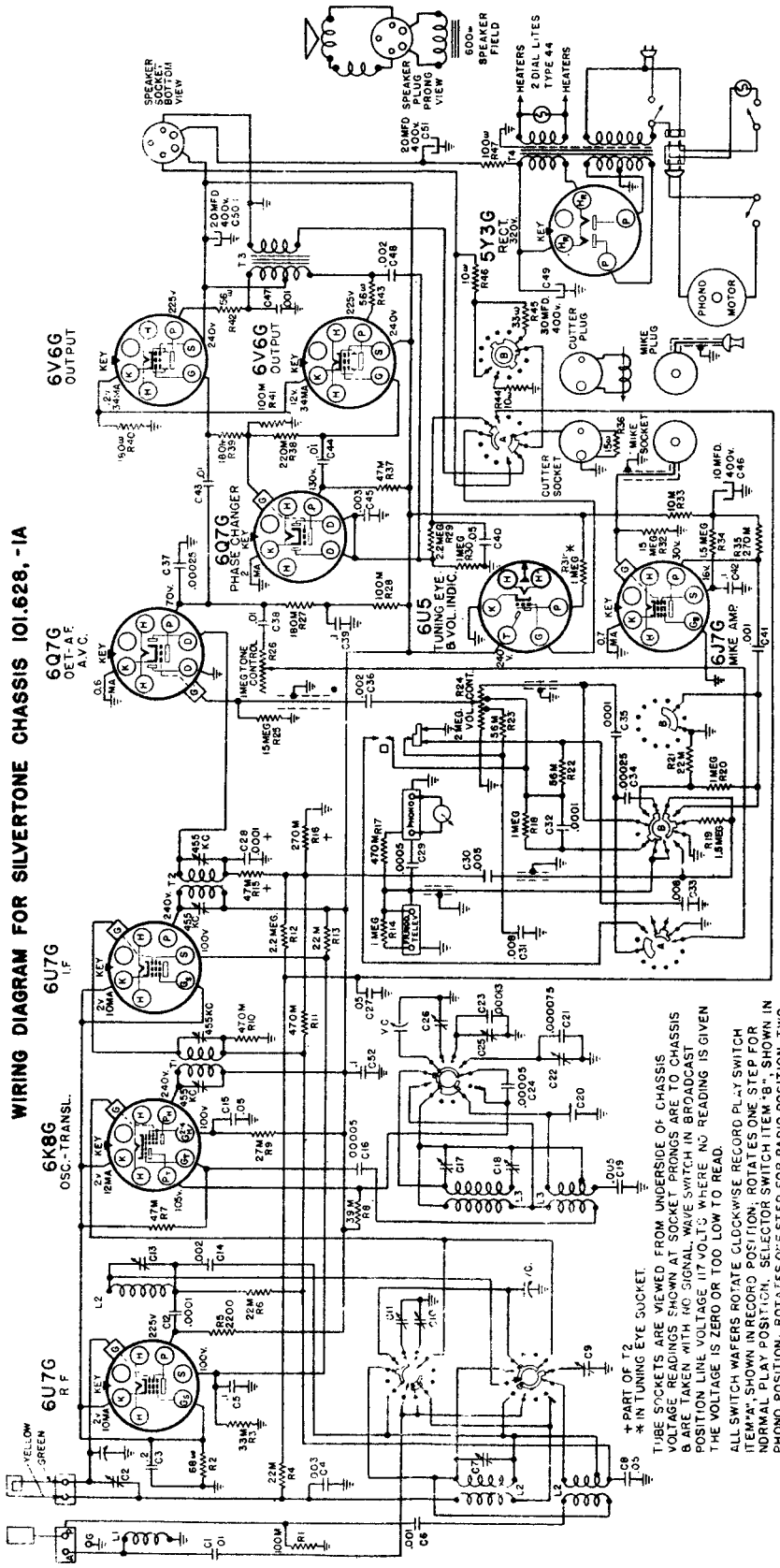

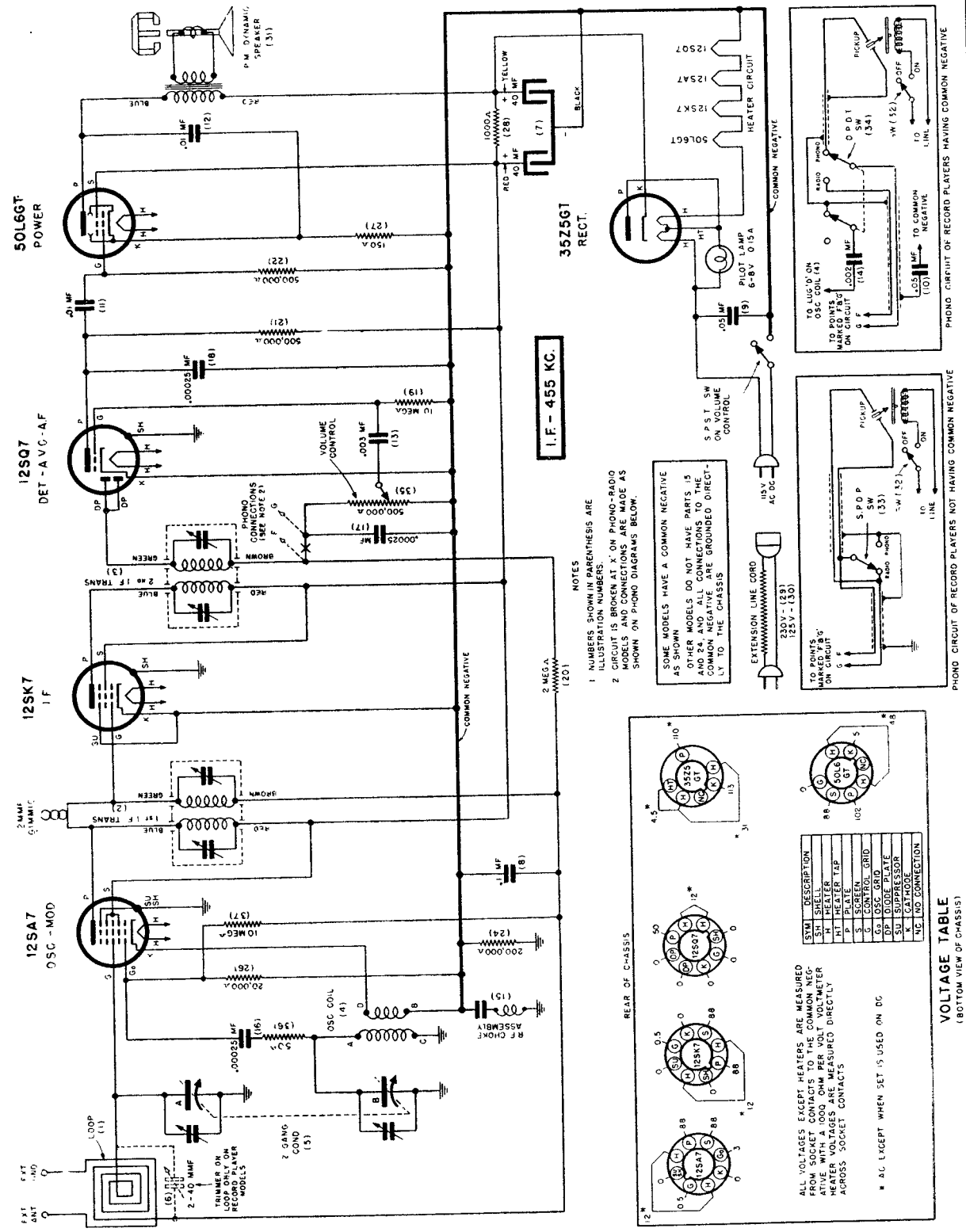

Sentinel Radio Corporation
Model 248

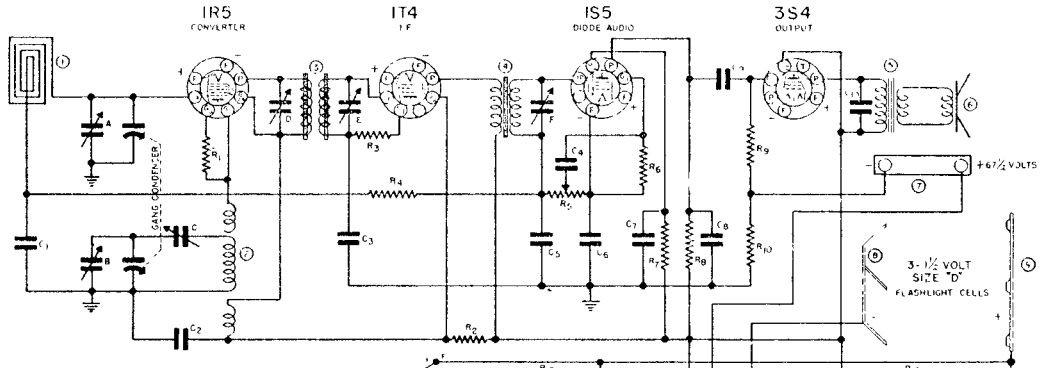

DIAG NO	PART NO	DESCRIPTION
R_1	N-1778	100,000 OHM 5W 20%
R_2	N-4278	4700 OHM 5W 10%
R_3	N-1263	10 MEGOHM 5W 20%
R_4	N-4277	2.2 MEGOHM 5W 20%
R_5	N-4213	1 MEGOHM VOLUME CONTROL
R_6	N-4028	6.8 MEGOHM 5W 20%
R_7	N-4062	3.3 MEGOHM 5W 20%
R_8	N-1262	1 MEGOHM 5W 20%
R_9	N-4277	2.2 MEGOHM .5W 20%
R_{10}	N-4279	820 OHM 5W 10%
R_{11}	N-4228	680 OHM 5W 10%
R_{12}	N-4280	56 OHM 5W 10%
R_{13}	N-4281	1800 OHM .5W. 10%
R_{14}	N-4065	2200 OHM 5W 10%
R_{15}	N 4252	1870 OHM 4.8W 5%
R_{16}		82 OHM 1.3W 10%
R_{17}		1000 OHM 5.6W 10%
	N-4185	2 GANG CONDENSER
1	N-4296	LOOP ANTENNA (WOOD)
	N-4251	LOOP ANTENNA (PLASTIC)
2	N 4257	OSCILLATOR COIL
3	N-4270	1 ST I.F. TRANSFORMER
4	N 4259	2 ND I.F. TRANSFORMER
5	N 4256	OUTPUT TRANSFORMER
6	N-4255	3½" P.M. SPEAKER
7	N-4274	8 BATTERY CONNECTOR
8	N 4220	A BATTERY SPRING CONTACT (NEGATIVE)
9	N 4222	A BATTERY CONTACT STRIP (POSITIVE)
	N-4215	CHANGEOVER SWITCH

SWITCH SHOWN IN COUNTER CLOCKWISE (AC-DC) POSITION

(BOTH VIEWS AS SEEN FROM SHAFT END)

POS	CONTACTS NAME FRONT	REAR
AC DC	8, 9, 11, 12	2, 3, 6-10
OFF	NONE	2, 3-4, 8, 10, 11
BATTERY	2-3, 9-10	3-4-5, 6, 8, 9, 10, 12-2

I.F. 456 KC

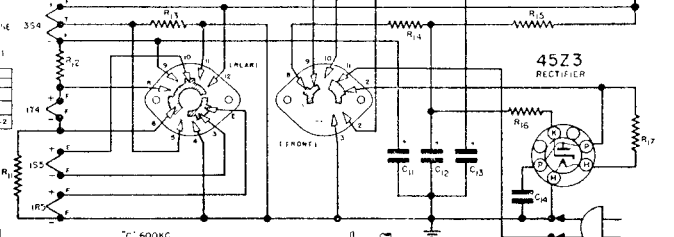

DIAG NO	PART NO	DESCRIPTION
C_1	N-1345	.05 MFD 200 V
C_2	N 1345	.05 MFD 200 V
C_3	N 1344	.01 MFD 400 V
C_4	N-2712	.004 MFD 400 V
C_5		.0001 MFD (IN 2nd I.F. CAN)
C_6	N-1351	1 MFD 200 V
C_7	N-1344	.01 MFD 400 V
C_8	N-1342	50 MMFD MICA
C_9	N-1344	.01 MFD 400 V
C_{10}	N 2712	.004 MFD 400 V
C_{11}	N-4206	100 MFD 12V
C_{12}		30 MFD 150V. ELECTROLYTIC
C_{13}		30 MFD 150V
C_{14}	N-1346	.05 MFD 400 V

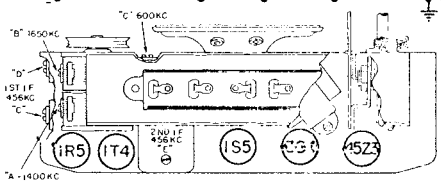

TUBE AND TRIMMER LOCATIONS

5 TUBE - 3 WAY PORTABLE

BATTERY, 110-120 VOLTS AC OR DC

SUPERHETERODYNE

SINGLE BAND

DRWN SC APP D. Lil Lin

MAY 1941

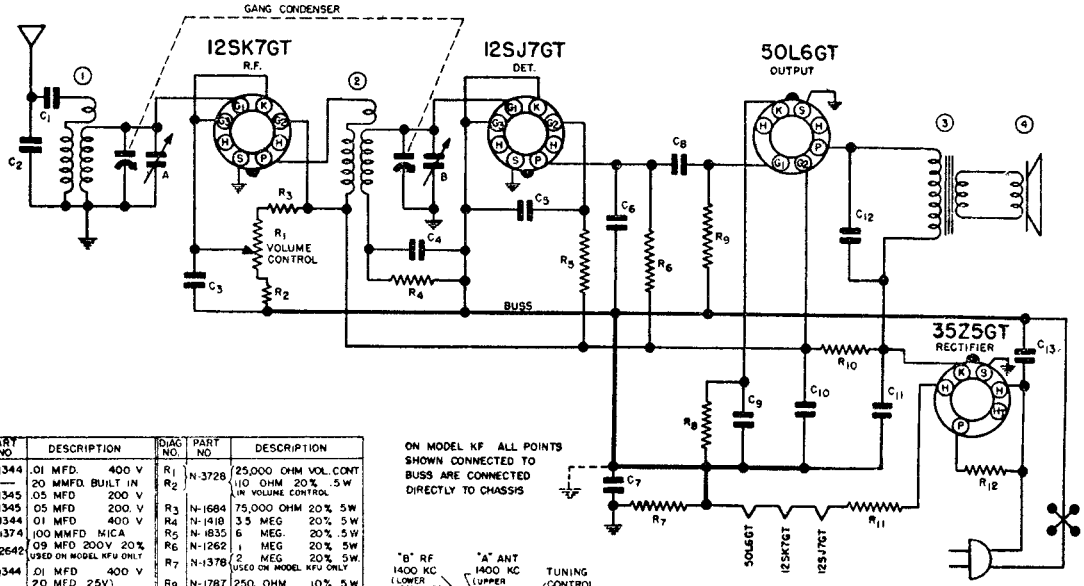

DIAG NO	PART NO	DESCRIPTION
C_1	N-1344	.01 MFD. 400 V
C_2	——	20 MMFD. BUILT IN
C_3	N-1345	.05 MFD 200 V
C_4	N-1345	.05 MFD 200. V
C_5	N-1344	.01 MFD 400 V
C_6	N-1374	100 MMFD MICA
C_7	N-2642	.09 MFD 200V 20% (USED ON MODEL KFU ONLY)
C_8	N-1344	.01 MFD 400 V
C_9	N-3734	20 MFD 25V. ELECTROLYTIC
C_{10}		.15 MFD 150 V.
C_{11}		40 MFD 150 V.
C_{12}	N-1344	.01 MFD. 400 V
C_{13}	N-1346	.05 MFD. 400 V
	N-3731	GANG CONDENSER
R_1	N-3728	25,000 OHM VOL. CONT.
R_2		110 OHM 20% .5W (IN VOLUME CONTROL)
R_3	N-1684	75,000 OHM 20% 5W
R_4	N-1418	3.3 MEG 20% 5W
R_5	N-1835	6 MEG. 20% .5W
R_6	N-1262	1 MEG 20% 5W
R_7	N-1378	2 MEG. 20% 5W. (USED ON MODEL KFU ONLY)
R_8	N-1787	250. OHM 10% 5W
R_9	N-1264	5 MEG 20% 5W
R_{10}	N-1417	3,000 OHM 20% 5W
R_{11}	N-1618	80. OHM 10% 2.W
R_{12}	N-1742	25 OHM 20% 5W
1	N-3722	ANTENNA COIL
2	N-3733	R.F. COIL
3	N-3729	OUTPUT TRANS.
4	N-3730	SPEAKER

ON MODEL KF ALL POINTS SHOWN CONNECTED TO BUSS ARE CONNECTED DIRECTLY TO CHASSIS

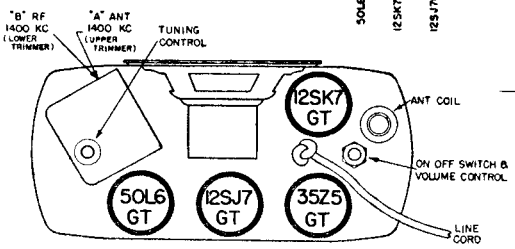

Sonora

4 TUBE T.R.F.

DRWN P.K. APP. 9-10-40

SCHEMATIC DIAGRAM
SPARTON SUPERHETERODYNE MODEL 511U & 511 (SEE NOTE)
INTERMEDIATE FREQUENCY 456 K.C.

BOTTOM VIEWS OF ALL SOCKET CONNECTIONS

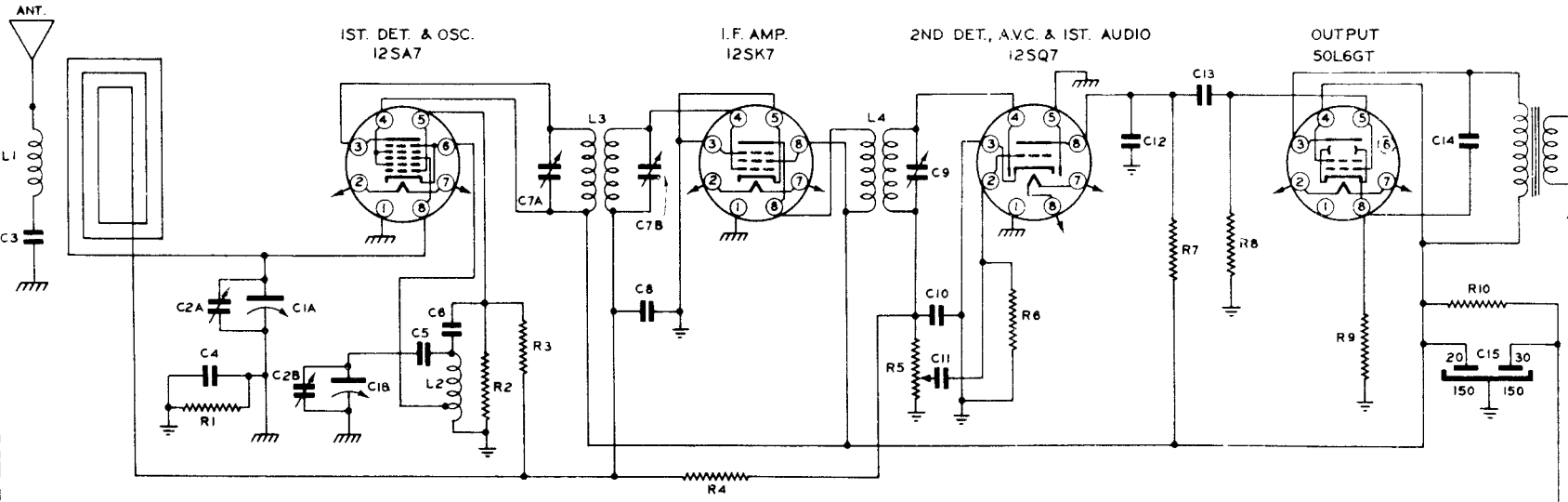

CHASSIS GROUND

COMMON GROUND

NOTE:
FOR MODEL 511 MAKE THE FOLLOWING CHANGES:
OMIT C4, C5 & R1
CONNECT ALL COMMON GROUNDS TO CHASSIS GROUND.
L2 B.C OSC COIL A-20138

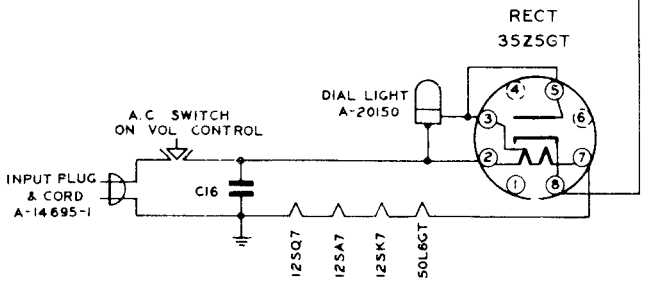

C1A&B	VARIABLE CONDENSER		A-20158
C2A&B	TRIMMERS ON VARIABLE		
C3	.001 MFD.	600V.	C 3206-58C
C4	.2 MFD.	200V.	C-3202-96C
C5	.02 MFD.	200V.	C-3202-78C
C6	50 MMF.	MICA	C-720-315
C7A&B	NO.1 I.F. TRIMMERS		
C8	.05 MFD.	200V.	C-3202-84C

C9	NO 2 I.F. TRIMMER		
C10	250 MMF.	MICA	C-720-324
C11	.01 MFD	400V.	C-3204-78C
C12	500 MMF.	MICA	C-720-316
C13	.002 MFD.	600V	C-3206-60C
C14	.01 MFD.	400V.	C-3204-78C
C15	20-30 MFD.	ELECT.	A-20135
C16	.05 MFD.	400V.	C-3204-84C

R1	150,000 Ω	.5W.	C-2796-26C
R2	20,000 Ω	.5W.	C-2796-190C
R3	15 MEGOHM	.5W.	A-20136
R4	2 MEGOHM	.5W.	C-2796-238C
R5	500,000 Ω V.C & SW.		A-20137
R6	5 MEGOHM	.5W.	C-2796-248C
R7	250,000 Ω	.5W.	C-2796-216C
R8	500,000 Ω	.5W.	C-2796-94C
R9	150 Ω	.5W	C-2796-52C
R10	1000 Ω	1W.	C-2797-13B

L1	LOOP ANTENNA	A-20159
L2	B.C OSC COIL	A-20138-U
L3	NO.1 I.F. COIL	A-20139
L4	NO 2 I.F. COIL	A-20140

SCHEMATIC DIAGRAM
SPARTON SUPERHETERODYNE MODEL 601-S
INTERMEDIATE FREQUENCY 456 K.C.

BOTTOM VIEWS OF ALL SOCKET CONNECTIONS

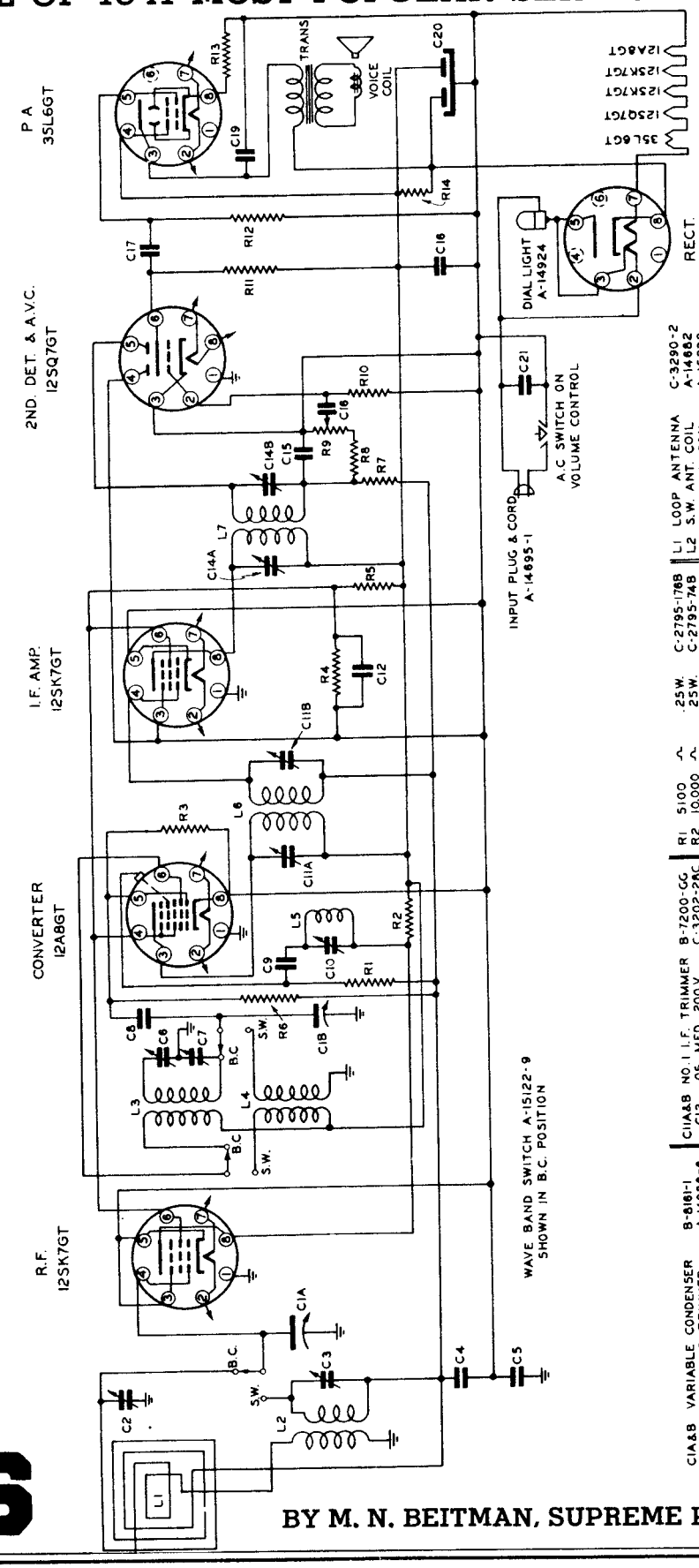

C1A&B	VARIABLE CONDENSER	B-8181-1	C1A&B	NO. 1 I.F. TRIMMER	B-7200-GG	R1	5100 Ω	.25 W.	C-2795-17B	L1	LOOP ANTENNA	C-3290-2
C2	B.C. ANT TRIMMER	A-14088-8	C12	.05 MFD 200 V.	C-3202-28C	R2	10,000 Ω	.25 W.	C-2795-7AB	L2	S.W. ANT. COIL	A-14882
C3	S.W. ANT. TRIMMER	A-14088-1				R3	56,000 Ω	.25 W.	C-2795-20B	L3	B.C. OSC. COIL	A-15232
C4	.05 MFD. 200V.	C-3202-84C	C14A&B	NO. 2 I.F. TRIMMER	B-7200-GN	R4	22,000 Ω	.25 W.	C-2795-7BB	L4	S.W. OSC. COIL	A-15233
C5	.15 MFD. 400V.	C-3204-95C	C15	500 MMF. MICA	C-720-31B	R5	5600 Ω	.5 W.	C-2795-17C	L5	I.F. REJECT. COIL	A-14718-1
C6	B.C. OSC. TRIMMER	A-15741	C16	.01 MFD. 200V	C-3202-20C	R6	8.2 MEGOHM	.25 W.	C-2795-10B	L6	NO. 1 I.F. COIL	A-12064-32
C7	B.C. OSC. PADDER		C17	.01 MFD. 200V.	C-3202-20C	R7	1 MEGOHM	.25 W.	C-2795-9BB	L7	NO. 2 I.F. COIL	A-12064-17
C8	50 MMF. MICA	A-15741	C18	.1 MFD. 200V.	C-3202-38C	R8	56,000 Ω	.25 W.	C-2795-20B			
C9	100 MMF. MICA	C-720-372	C19	.03 MFD. 400V.	C-3204-80C	R9	VOL. CONT. & SW.		A-15129-8			
C10	I.F. REJECT. TRIMMER	C-720-339	C20	.25-25 MFD. ELECT.	A-15571	R10	10 MEGOHM	.25 W.	C-2795-11B			
		A-14088-2	C21	.05 MFD. 400V	C-3204-28C	R11	270,000 Ω	.25 W.	C-2795-9B			
						R12	680,000 Ω	.25 W.	C-2795-96B			
						R13	180 Ω	.5 W.	C-2798-53C			
						R14	1800 Ω	1 W.	C-2797-65B			

SCHEMATIC DIAGRAM

SPARTON SUPERHETERODYNE MODELS 651, 651-D, 651-SX, 651-SXD, 651-SXP

INTERMEDIATE FREQUENCY 456 K.C.

BOTTOM VIEWS OF ALL SOCKET CONNECTIONS

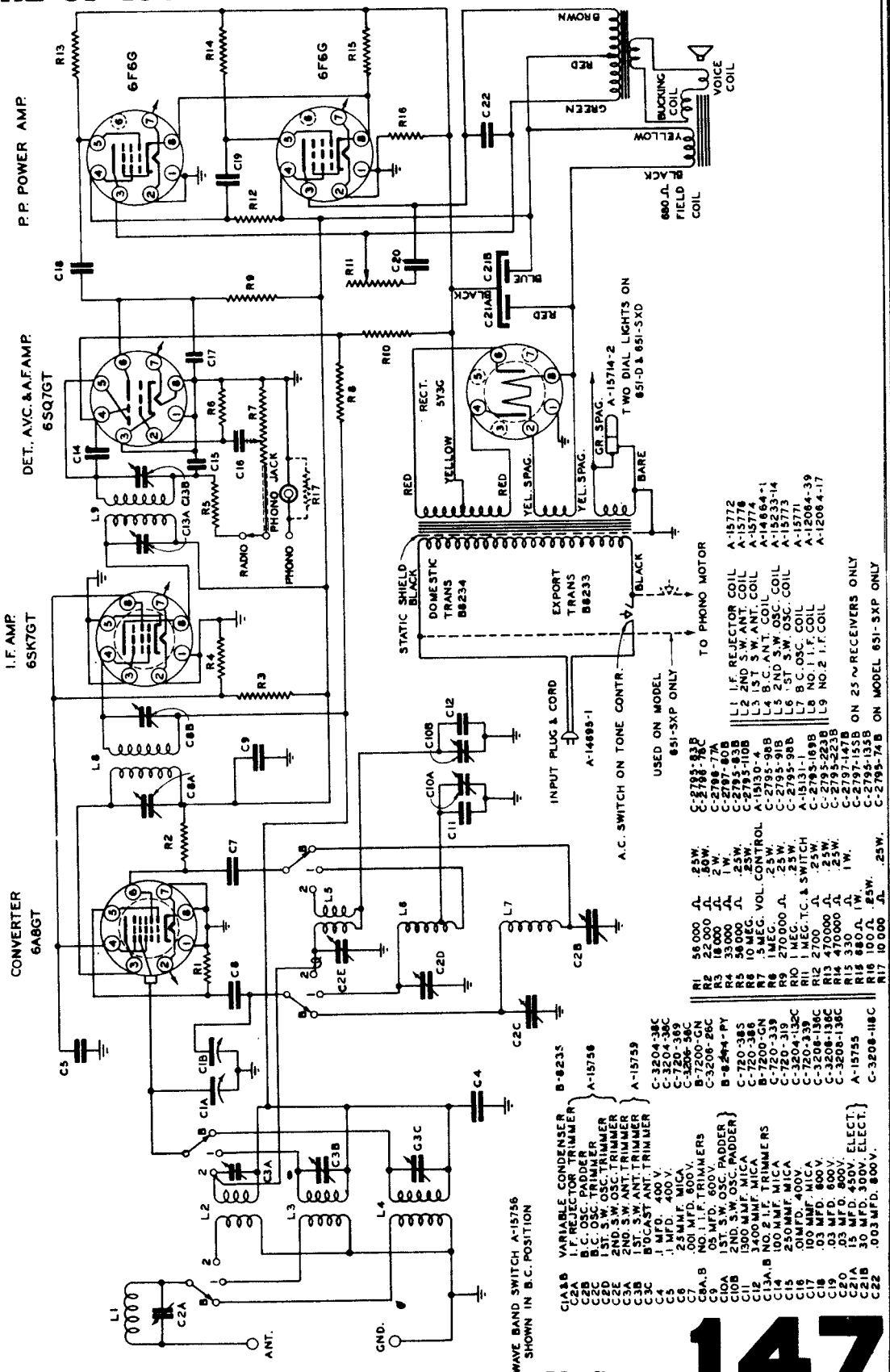

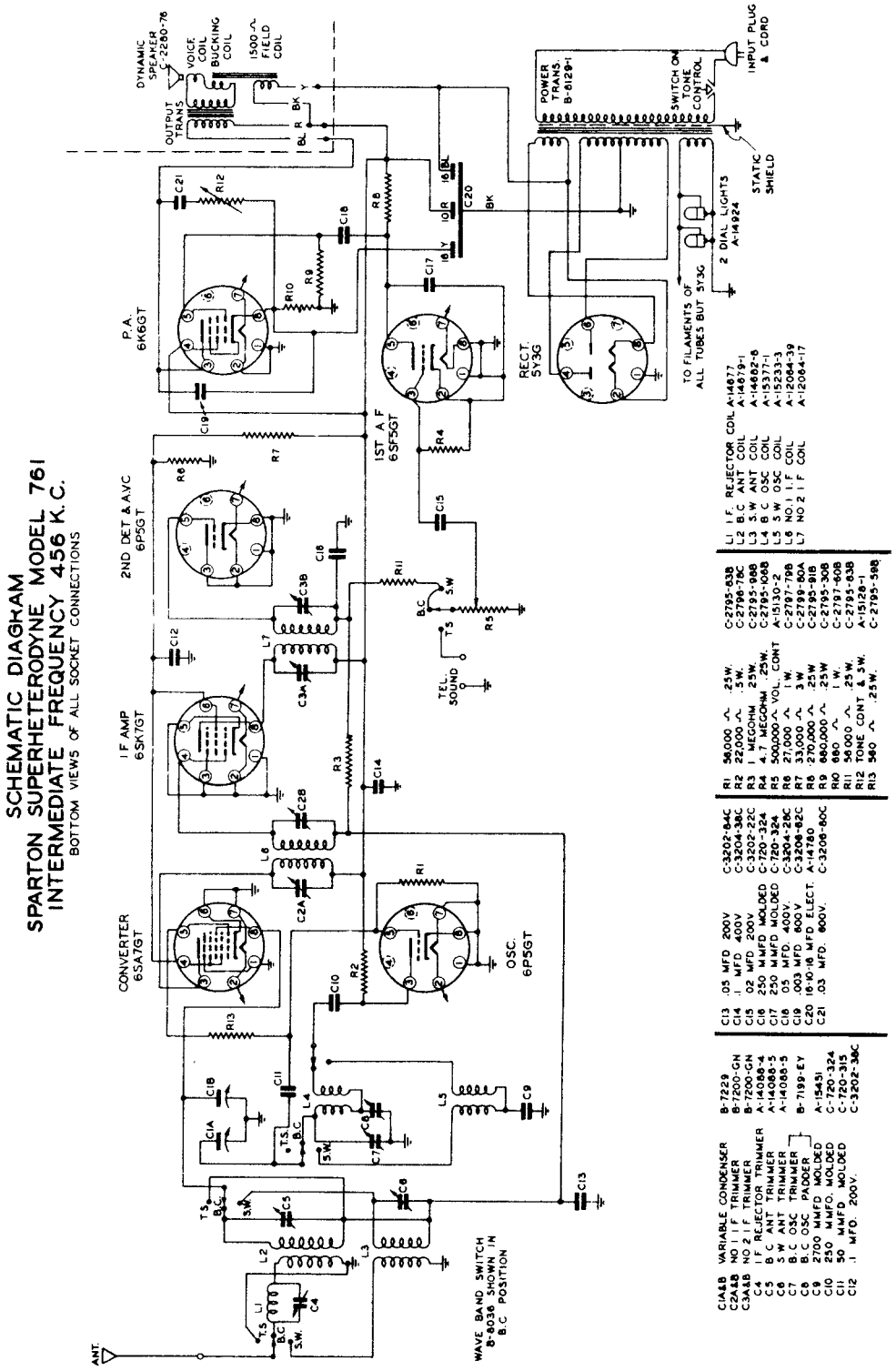
SCHEMATIC DIAGRAM
SPARTON SUPERHETERODYNE MODEL 761
INTERMEDIATE FREQUENCY 456 K.C.
BOTTOM VIEWS OF ALL SOCKET CONNECTIONS
DYNAMIC SPEAKER C-2260-76
VOICE COIL
BUCKING COIL
1500 Ω FIELD COIL
OUTPUT TRANS
POWER TRANS. B-8129-1
SWITCH ON TONE CONTROL
INPUT PLUG & CORD
STATIC SHIELD
2 DIAL LIGHTS A-14924
TO FILAMENTS OF ALL TUBES BUT 5Y3G
P.A. 6K6GT
2ND DET & A.V.C 6P5GT
I F AMP 6SK7GT
CONVERTER 6SA7GT
1ST A F 6SF5GT
RECT. 5Y3G
OSC. 6P5GT
TEL. SOUND
ANT.
WAVE BAND SWITCH B-8038 SHOWN IN B.C POSITION
L1 I.F. REJECTOR COIL A-14677
L2 B.C ANT COIL A-14679-1
L3 S.W ANT COIL A-14602-6
L4 B C OSC COIL A-15377-1
L5 S W OSC COIL A-15233-3
L6 NO.1 I.F. COIL A-12064-39
L7 NO.2 I F COIL A-12064-17
R1 58,000 Ω .25W. C-2795-63B
R2 22,000 Ω .5W. C-2796-78C
R3 1 MEGOHM .25W. C-2795-98B
R4 4.7 MEGOHM .25W. C-2795-106B
R5 500,000 Ω VOL. CONT A-15130-2
R6 27,000 Ω 1W. C-2797-79B
R7 33,000 Ω 3W C-2799-80A
R8 270,000 Ω .25W C-2795-30B
R9 680,000 Ω .25W C-2795-91B
R10 560 Ω 1W. C-2797-60B
R11 500,000 Ω .25W. C-2795-63B
R12 TONE CONT. 4.5W. A-15128-1
R13 560 Ω .25W. C-2795-59B
C13 .05 MFD 200V C-3202-84C
C14 .1 MFD 400V C-3204-38C
C15 .02 MFD 200V C-3202-22C
C16 250 MMFD MOLDED C-720-324
C17 250 MMFD MOLDED C-720-324
C18 .05 MFD. 400V. C-3204-28C
C19 .005 MFD. 600V. C-3204-82C
C20 16-8-16 MFD. ELECT. A-14780
C21 .03 MFD. 600V. C-3206-80C
C1A&B VARIABLE CONDENSER B-7229
C2A&B NO 1 I F TRIMMER B-7200-GN
C3A&B NO 2 I F TRIMMER B-7200-GN
C4 I.F. REJECTOR TRIMMER A-14088-4
C5 B C ANT TRIMMER A-14088-5
C6 S W ANT TRIMMER A-14088-5
C7 B.C OSC TRIMMER
C8 B.C OSC PADDER B-7199-EY
C9 2700 MMFD MOLDED A-15451
C10 250 MMFD. MOLDED C-720-324
C11 50 MMFD MOLDED C-720-315
C12 .1 MFD. 200V. C-3202-38C

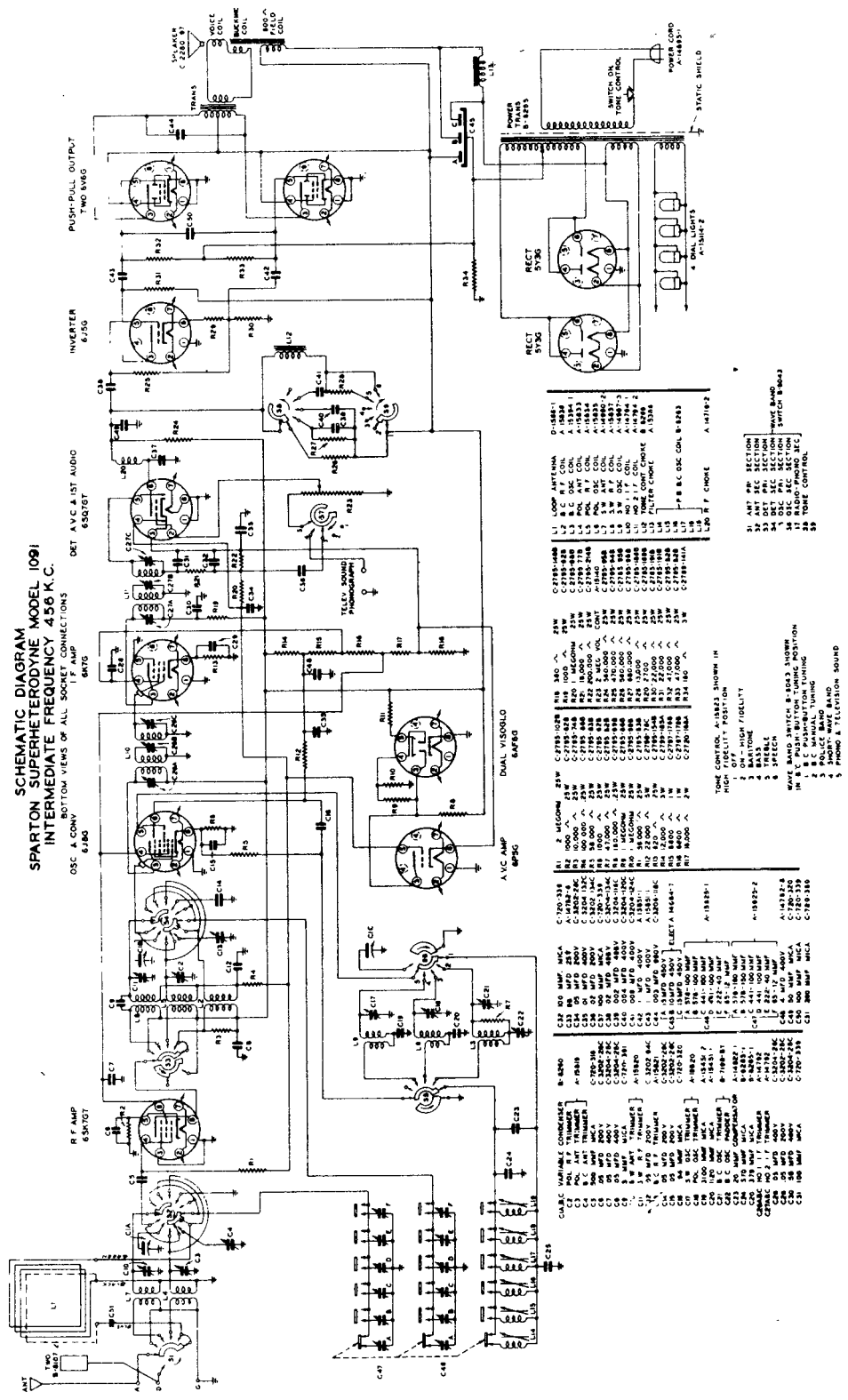
SCHEMATIC DIAGRAM
SPARTON SUPERHETERODYNE MODEL 1091
INTERMEDIATE FREQUENCY 456 K.C.
BOTTOM VIEWS OF ALL SOCKET CONNECTIONS
OSC & CONV 6J6G
I F AMP 6K7G
DET A V C & 1ST AUDIO 6SQ7GT
INVERTER 6J5G
PUSH-PULL OUTPUT TWO 6V6G
R F AMP 6SK7GT
DUAL VISOGLO 6AF6G
A V C AMP 6P5G
RECT 5Y3G
RECT 5Y3G
TELEV SOUND PHONOGRAPH
SPEAKER
VOICE COIL
BUCKING COIL
AUDIO FIELD COIL
TRANS
POWER TRANS
SWITCH ON TONE CONTROL
POWER CORD
STATIC SHIELD
4 DIAL LIGHTS
ANT

STEWART-WARNER 11-5V CHASSIS (MODEL 11-5V9)

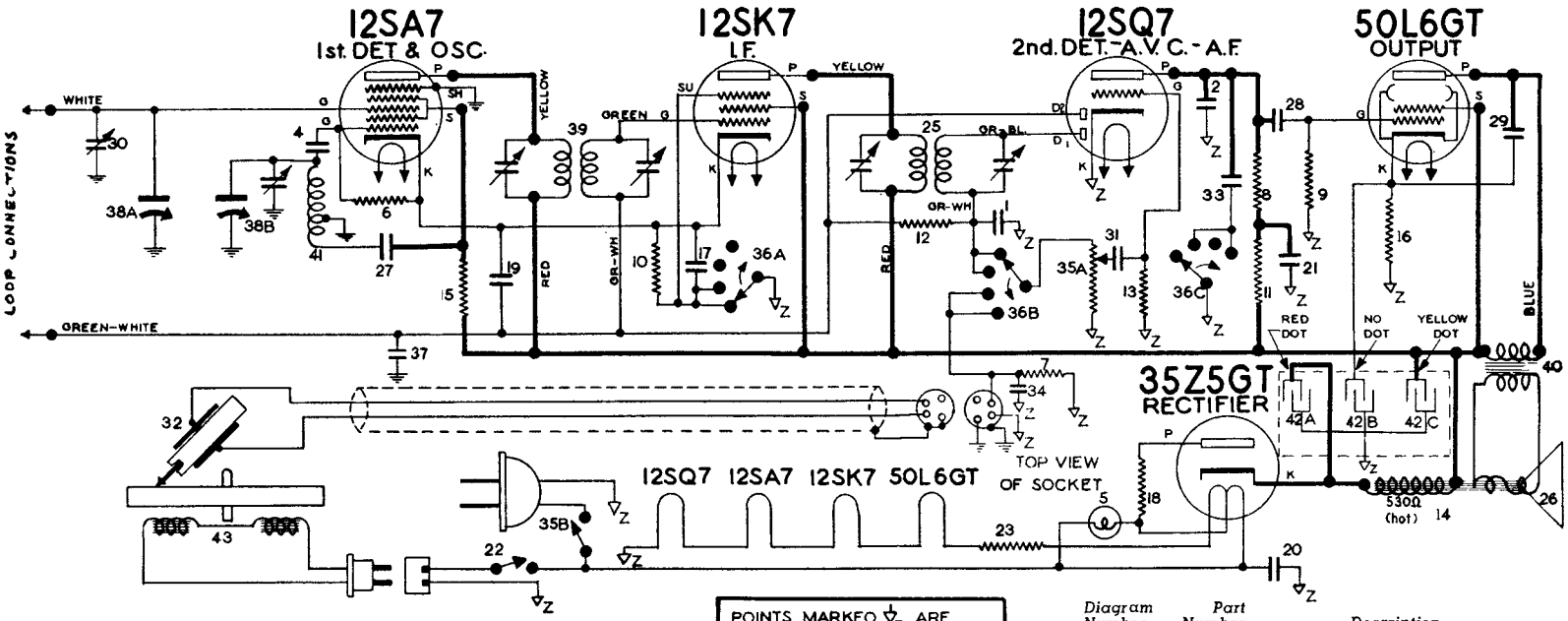

POINTS MARKED ⏚Z ARE CONNECTED TOGETHER TO FORM THE B- CIRCUIT. THE .07MFD. CONDENSER DIAG. NO. 24 CONNECTS FROM THIS CIRCUIT TO CHASSIS.

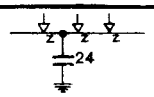

BOTTOM VIEW OF CHASSIS

LINE VOLTAGE 117 VOLTS

VOLTAGES MEASURED BETWEEN SOCKET TERMINALS AND B- LUG

VOLTAGE ACROSS SPEAKER FIELD 28 VOLTS

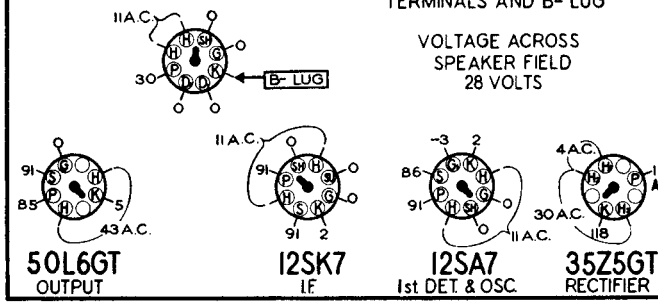

REAR OF CHASSIS

Use a Voltmeter of 1000 ohms per volt.

ELECTRICAL PARTS

Diagram Number	Part Number	Description
1-2	83539	Condenser mica 260 mmfd.
3	83783	Condenser mica 110 mmfd.
4	85061	Condenser mica 51 mmfd.
5	85296	Lamp--dial 6 to 8 volt (Mazda 51).
6	.110552	Resistor - carbon 47,000 ohms ¼ w
7	.110553	Resistor--carbon 220,000 ohms ¼ w
8 9	.110559	Resistor carbon 470,000 ohms ¼ w
10	.110560	Resistor carbon 100 ohms ¼ watt
11	.110564	Resistor carbon 100,000 ohms ¼ w
12	.110570	Resistor carbon 2.2 meg. ¼ watt.
13	.112975	Resistor carbon 10 meg. ¼ watt.
14	R-115102	Speaker -dynamic (5")
15	118803	Resistor- 680 ohms ¼ watt
16	116092	Resistor -140 ohms 1 watt W.W.
17	116706	Condenser - .2 mfd. 600 volt
18	116752	Resistor - 33 ohms 1 watt wire wound
19 to 21	116819	Condenser - .05 mfd. 600 volt
22	116964	Switch--"on-off" for phono motor
23	117395	Resistor - 20 ohms 1 watt
24	118487	Condenser -.07 mfd. 600 volts
25	118903	Transformer- 2nd I.F.
26	118999	Cone & Voice Coil for R-115102 speaker
27 to 29	119193	Condenser--.01 mfd. 600 volt
30	119345	Condenser- trimmer
31	119817	Condenser - .004 mfd. 600 volt
32	119864	Crystal cartridge with leads and needle screw
33-34	119875	Condenser .002 mfd. 600 volt
35A-35B	119912	Volume control 1 meg. (with switch)
36A-36B-36C	119921	Switch tone & phonograph (See table for switch positions)
37	119193	Condenser .01 mfd. 600 volt
38A-38B	119928	Condenser variable tuning
39	119935	Transformer—1st I.F.
40	R-119944	Transformer—output for R-115102 Speaker
41	119954	Coil oscillator
42A-42B-42C	160012	Condenser---electrolytic, A--40 mfd.—200 volt; B—20 mfd. - 25 volt; C—20 mfd. 200 volt

COMPILED BY M. N. BEITMAN, SUPREME PUBLICATIONS

STEWART-WARNER 11-5W CHASSIS

(RECEIVER MODELS 11-5W1 TO 11-5W9)

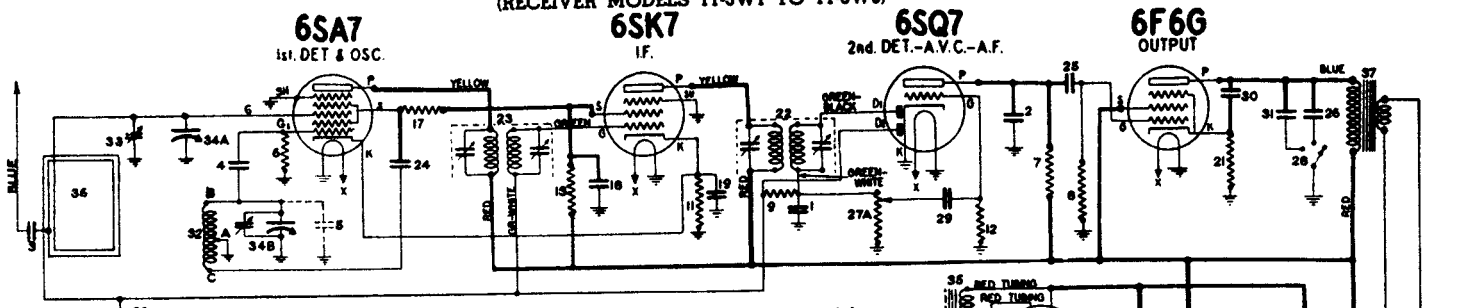

INTERMEDIATE FREQUENCY
455 KC.

Stewart-Warner Corporation
1826 Diversey Parkway
Chicago, Illinois

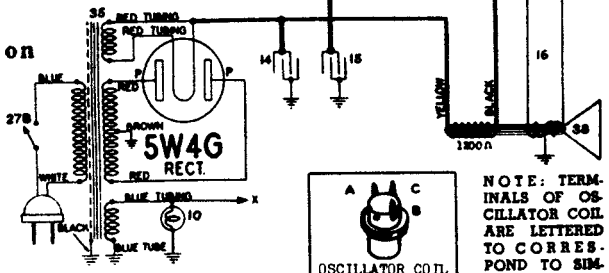

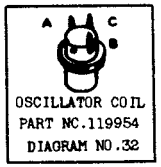

NOTE: TERMINALS OF OSCILLATOR COIL ARE LETTERED TO CORRESPOND TO SIMILARLY LETTERED TERMINALS ON THE CIRCUIT DIAGRAM.

ELECTRICAL PARTS

Diagram Number	Part Number	Description	List Price
1-2	83539	Condenser—Mica, 260 Mmfd.	$ .20
3	83783	Condenser—Mica, 110 Mmfd.	.20
4	85061	Condenser—Mica, 51 Mmfd.	.15
5	85563	Condenser—Mica, 26 Mmfd. (used only on some sets)	.15
6	110552	Resistor—Carbon, 47,000 Ohms, ¼ Watt	.12
7-8	110553	Resistor—Carbon, 220,000 Ohms, ¼ Watt	.12
9	110580	Resistor—Carbon 3.3 meg. ¼ W.	.12
10	110629	Dial Light—6.3 Volt (Mazda No. 44)	.15
11	112874	Resistor—Carbon—220 Ohms, ¼ Watt	.15
12	112975	Resistor—Carbon—10 Meg. ¼ W.	.12
13	112997	Resistor—Carbon—22,000 Ohms, 1 Watt	.15
14-15	114258	Condenser—Electrolytic—8 mfd., 450 Volt	.98
16	U-115114	Speaker—Dynamic (5")	4.50
17	116068	Resistor—680 Ohms, ¼ Watt	.12
18-19	116625	Condenser—.1 Mfd., 600 Volt	.25
20	116819	Condenser—.05 Mfd., 600 Volt	.20
21	116978	Resistor — 420 Ohm — ½ Watt Wire Wound	.15
22	119024	Transformer—2nd I. F.	1.15
23	119042	Transformer—1st I.F.	1.10
24-25-26	118193	Condenser—.01 Mfd., 600 Volt	.15
27A-27B	119629	Vol. Control—(1 meg.) & Switch	1.30
28	119630	Tone Switch	.65
29-30	119817	Condenser—.004 Mfd., 600 Volt	.15
31	119880	Condenser—.04 Mfd., 600 Volt	.20
32	119954	Coil—Oscillator	.36
33	160346	Condenser—Trimmer	.18
34A-34B	160347	Condenser—Variable Tuning	2.30
35	160367	Transformer—Power (50-60 Cycle)	3.60
	181230	Transformer—Power (25 Cycle)	3.90
36	160368	Loop Antenna (Complete)	.80
37	U-160458	Transformer—Output for U-115114 Speaker	1.50
38	U-160459	Cone & Voice Coil for U-115114 Speaker	1.50

MISCELLANEOUS PARTS

Part Number	Description	List Price
160452	Cabinet Back	$ .17
114955	Clamp—Dial Cord	.01
112745	Clip—Coil Mounting	.01
113019	Clip—Dial Scale Retaining	.01
116948	Cord—Dial Drive	.18
160349	Dial Scale	.30
119591	Dial Window	.24
160356	Knob—Push On	.10
160354	Pilot Lamp Socket	.10
160355	Pointer	.14
81145	Retaining Ring for Drive Shaft	.50
83624	Screw—Self Tapping 8x¼	.01
116690	Socket—Octal Base	.12
117078	Socket—Octal with Special Gndg. Lug	.12
111090	Spacer—Steel	.02
114968	Spring—Dial Cord Tension	.03
119615	Tuning Shaft	.07
111456	Washer—For Tuning Shaft	.50

PRICES SUBJECT TO CHANGE WITHOUT NOTICE

SOCKET VOLTAGES

VOLTAGE ON FULL WITH NO SIGNAL — DIAL TUNED TO 540 KC

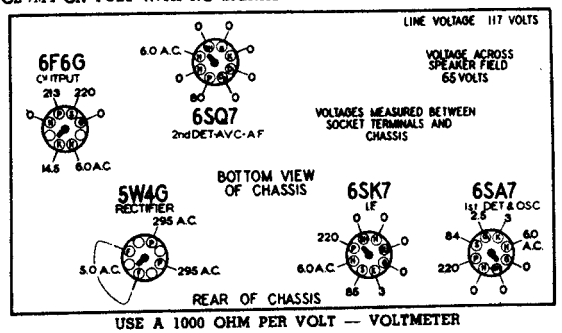

USE A 1000 OHM PER VOLT — VOLTMETER

STEWART-WARNER 15-5Y CHASSIS

(RECEIVER MODELS 15-5Y1 TO 15-5Y9)

SWITCHES 32 & 33 ARE SHOWN IN A.C.-D.C. POSITION.

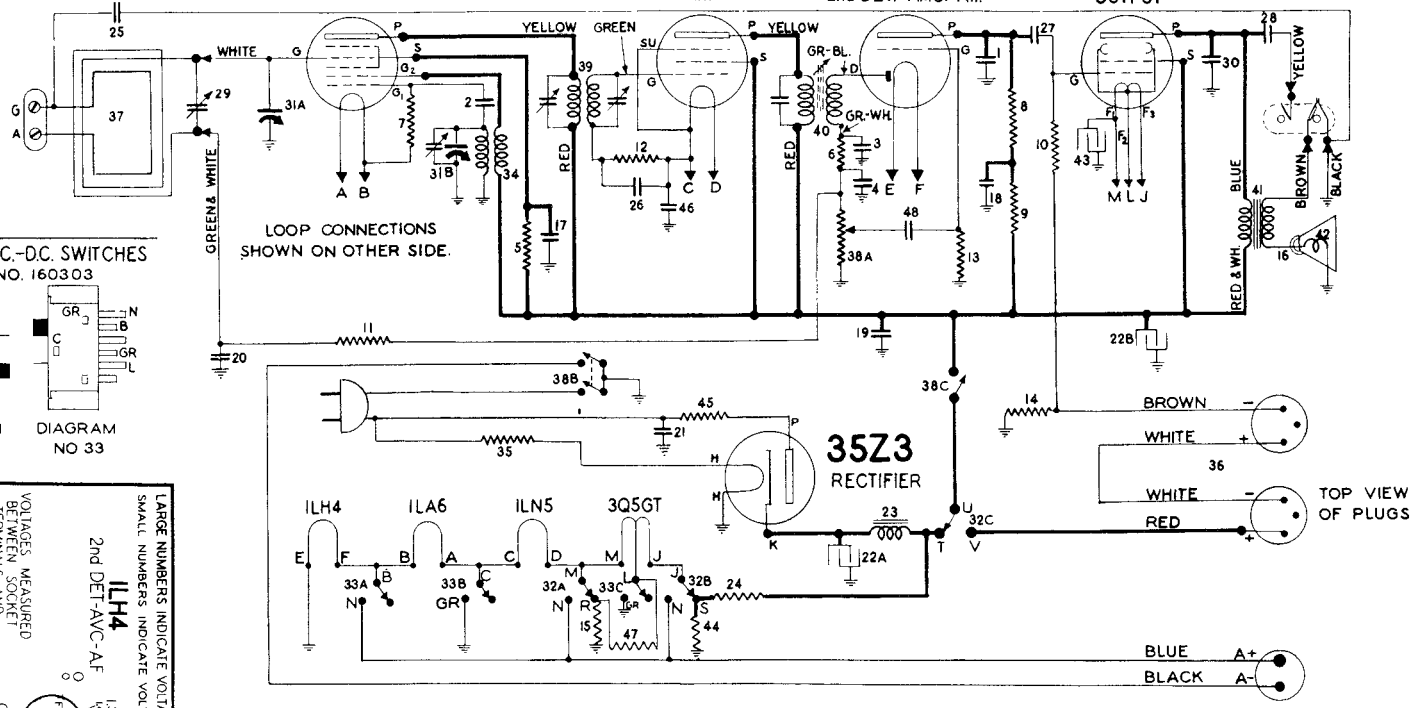

BATTERY & A.C.-D.C. SWITCHES
PART NO. 160303

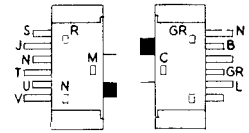

DIAGRAM NO. 32 — DIAGRAM NO 33

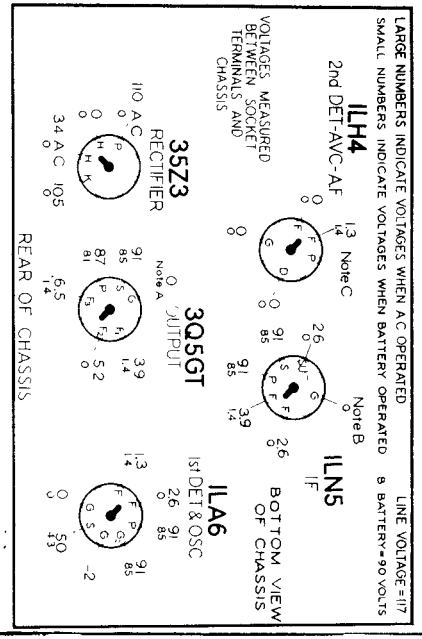

1	81158	Condenser—mica, 100 mmfd.	$ .25
2-3-4	85061	Condenser—mica, '51 mmfd.	.15
5-6	110552	Resistor—carbon 47,000 ohms ¼ watt	.12
7	110553	Resistor—carbon 220,000 ohms ¼ watt	.12
8	110554	Resistor—carbon 1 megohm ¼ watt	.12
9	110559	Resistor—carbon 470,000 ohms ¼ watt	.12
10	110570	Resistor—carbon 2.2 meg. ¼ watt	.15
11-12-13	110580	Resistor—carbon 3.3 meg. ¼ watt	.12
14-15	112977	Resistor—insulated 470 ohm ¼ watt	.15
16	U-115120	Speaker—P.M. (5")	5.50
17-18-19	116625	Condenser—.1 mfd. 600 volt	.25
20-21	116819	Condenser—.05 mfd. 600 volt	.20
22A-22B	117559	Condenser—electrolytic 30-30 mfd. 150 volt	1.20
23	117888	Filter choke	.85
24	118842	Resistor—1680 ohms 5 watts W. W.	.15
25 to 28	119193	Condenser—.01 mfd. 600 volt	.15
29	119845	Condenser—trimmer (on loop)	.16
30	119875	Condenser—.002 mfd. 600 volt	$ .15
31A-31B	160298	Condenser—variable tuning with drum	2.80
32-33	160303	Battery & A.C. switches	.68
34	160475	Coil—oscillator	.44
35	160492	Power cord (resistor type)	.95
36	160493	Battery cable	.54
37	160570	Loop antenna—complete	1.50
38A to 38C	161227	Volume control—(1 meg.) & switch	1.30
39	161247	Transformer—1st I.F.	1.20
40	161248	Transformer—2nd I.F. (iron core)	1.35
41	U-161255	Transformer—output for U-115120 spkr.	1.50
42	U-161256	Cone & Voice coil for U-115120 speaker	1.40
43	161273	Condenser—electrolytic 50 mfd. 25 volt	.50
44	116082	Resistor—insulated 1500 ohms ¼ watt	.15
45	116275	Resistor—50 ohms, ½ watt W. W.	.15
46	118290	Condenser—.5 mfd. 150 volt	.50
47	118827	Resistor—carbon, 270 ohms, ¼ watt	.10
48	119817	Condenser—.004 mfd., 600 volt	.15

MANUAL OF 1941 MOST POPULAR SERVICE DIAGRAMS

STEWART-WARNER 11-6T and 11-6T-S CHASSIS

(Receiver Models 11-6T1 to 11-6T9 and 11-6T1-S to 11-6T9-S)

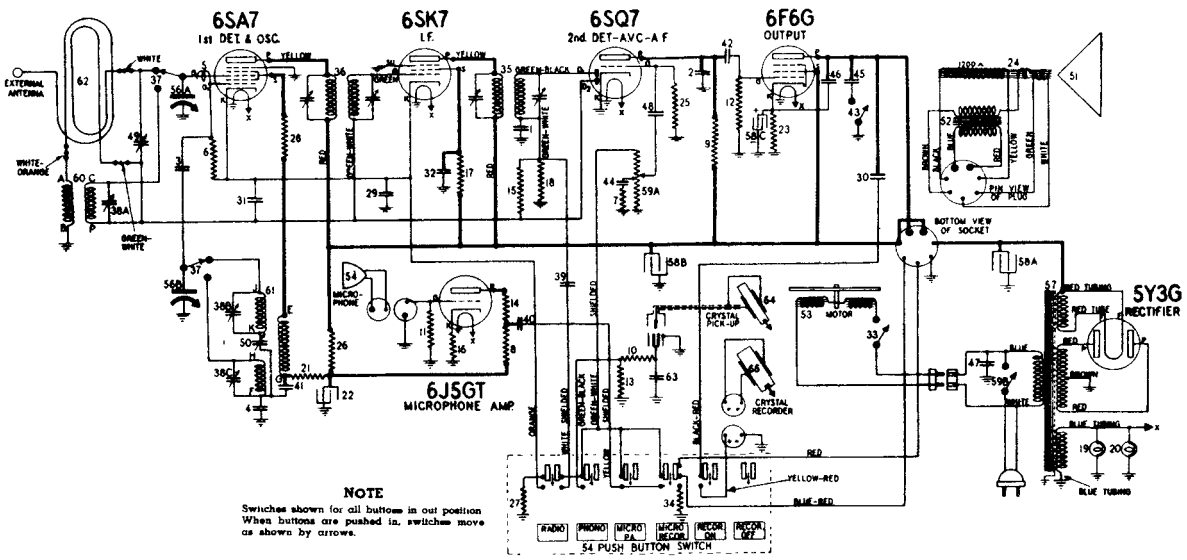

NOTE

Switches shown for all buttons in out position. When buttons are pushed in, switches move as shown by arrows.

ELECTRICAL PARTS

Diagram Number	Part Number	Description	List Price
1-2	83539	Condenser—mica 260 mmfd.	$0.20
3	98173	Condenser—mica 50 mmfd.	.20
4	88587	Condenser—mica .0042 mfd.	.35
5	110510	Condenser—wire 3 mmfd.	.12
6-7-8	110552	Resistor—carbon 47,000 ohms ¼ watt	.12
9-10	110553	Resistor—carbon 220,000 ohms ¼ watt	.12
11	110554	Resistor—carbon 1 megohm ¼ watt	.12
12	110559	Resistor—carbon 470,000 ohms ¼ watt	.12
13	110564	Resistor—carbon 100,000 ohms ¼ watt	.12
14	110565	Resistor—carbon 22,000 ohms ¼ watt	.12
15	110570	Resistor—carbon 2.2 meg. ¼ watt	.15
16	110573	Resistor—carbon 2,200 ohms ¼ watt	.12
17	110578	Resistor—carbon 68,000 ohms ¼ watt	.12
18	110584	Resistor—carbon 330,000 ohms ¼ watt	.12
19-20	110829	Dial light—6.3 volt	.15
21	112952	Resistor—carbon 3,300 ohms ¼ watt	.10
22	114009	Condenser—electrolytic 4 mfd. 350 volt	.72
23	114335	Resistor—wire wound 430 ohms 2 watts	.20
24	U 115107	Speaker—dynamic 6"	6.10
25	116050	Resistor—insulated 10 meg ¼ watt	.12
26	116055	Resistor—carbon 22,000 ohms ½ watt	.12
27-28	116062	Resistor—150 ohms ¼ watt	.12
29-30	116625	Condenser—1 mfd. 600 volt	.25
31-32	116819	Condenser—.05 mfd. 600 volt	.20
33	116964	Switch—on-off for phono motor with escutcheon	.32
34	118819	Resistor—5 ohms 1 watt wire wound	.14
35	119024	Transformer—2nd I.F.	1.15
36	119042	Transformer—1st I.F.	1.10
37	119005	Range switch	.50
38A to 38C	119174	Condenser—trimmer—3 section	.45
39-40-41-42	119193	Condenser—.01 mfd. 600 volt	.15
43	119214	Switch—tone control	48
44-45	119414	Condenser—.02 mfd 600 volt	.15
46	119416	Condenser—.008 mfd. 600 volt	.15
47	119757	Condenser—(metal clad) .01 mfd. 600 volt	.20
48	119817	Condenser—.004 mfd. 600 volt	.15
49	119845	Condenser—trimmer (on loop)	.16
50	119934	Condenser—padder	.36
51	U-160028	Cone & voice coil for U-115107 speaker	1.60
52	U 160029	Transformer—output for U-115107 speaker	1.55
53	160036	Motor (less turntable)	8.00
54	160038	Microphone	12.50
55	160111	Push button switch	2.30
56A 56B	160170	Condenser—variable tuning	2.40
57	160172	Transformer—power (50-60 cycles)	4.20
58A to 58C	160174	Condenser—electrolytic Section A—20 mfd. 400 volt; Section B—15 mfd. 400 volt; Section C—10 mfd. 25 volt	1.30
59A 59B	160175	Volume control—1 meg. (with switch)	1.40
60	160190	Coil—antenna (S.W.)	.44
61	160195	Coil—oscillator	.75
62	160279	Loop antenna & cabinet back (complete) (Model 11-6T9)	1.40
	160783	Loop antenna & cabinet back (with trimmer) (Model 11-6T9)	1.40
63	160430	Condenser—.001 mfd. 600 volt	.15
64	161298	Crystal Pickup Cartridge	5.00
65	161298	Crystal Recorder Cartridge	9.50

PRICES SUBJECT TO CHANGE WITHOUT NOTICE.

DIAL AND MISCELLANEOUS PARTS

Part Number	Description	List Price
117117	Cable—motor	$0.38
114955	Clamp—for dial cord	.01
113019	Clip—dial scale retaining	.01
117057	Cord—drive (supplied in 3 ft. lengths)	15
160200	Dial scale	26
119208	Escutcheon—dial	90
119167	Knob	10
119166	Knob—push button	.08
117769	Name Plate (S.W.) (Model 11-6T8)	.07
117779	Name Plate (Off-Vol.) (Model 11-6T8)	05
117780	Name Plate (Tuning) (Model 11-6T8)	.05
161206	Name Plate (Tone) (Model 11-6T8)	.08
161207	Name Plate (F.B) (Model 11-6T8)	.06
160033	Needle cup	98
160127	Phonograph needles Envelope of 10	10
116883	Pointer	16
81145	Retaining ring for drive shaft	Per C 50
119218	Screw—escutcheon mounting	.02
119204	Shaft—tuning	.10
111008	Socket—dial lamp	.12
160037	Socket—2 prong	.10
160171	Socket—4 prong	.12
160158	Socket—7 prong for speaker	.14
119791	Socket—8 prong	.12
114876	Socket—octal	.15
160039	Socket for pick up	.08
113177	Spring—dial cord tension	.88
161245	Tube & windows for recorder push buttons	.10
111456	Washer—spring washer	Per C 50

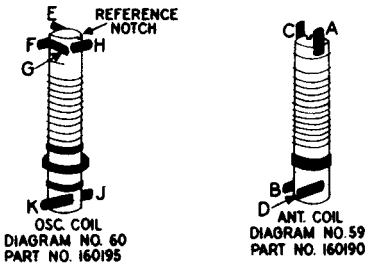

The terminals of the coils illustrated above are lettered to correspond to similarly lettered terminals on the circuit diagram.

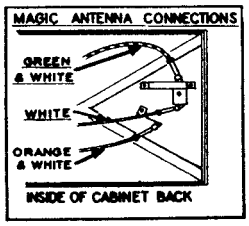

SOCKET VOLTAGES

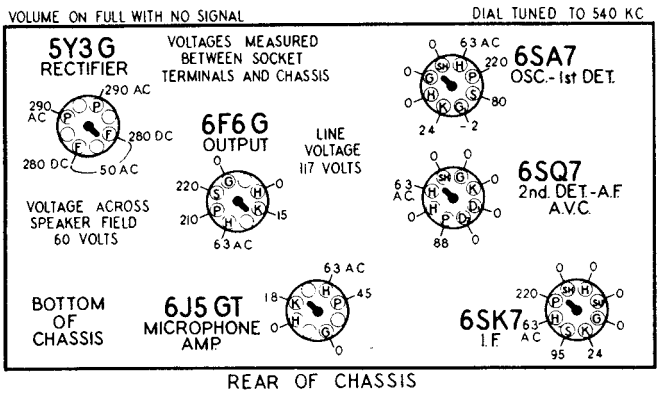

Use a high resistance voltmeter of 1000 oms per volt.

COMPILED BY M. N. BEITMAN, SUPREME PUBLICATIONS

STEWART-WARNER 11-8D and 11-8D-Z CHASSIS

RECEIVER MODELS 11-8D1 TO 11-8D9 & 11-8D1-Z TO 11-8D9-Z

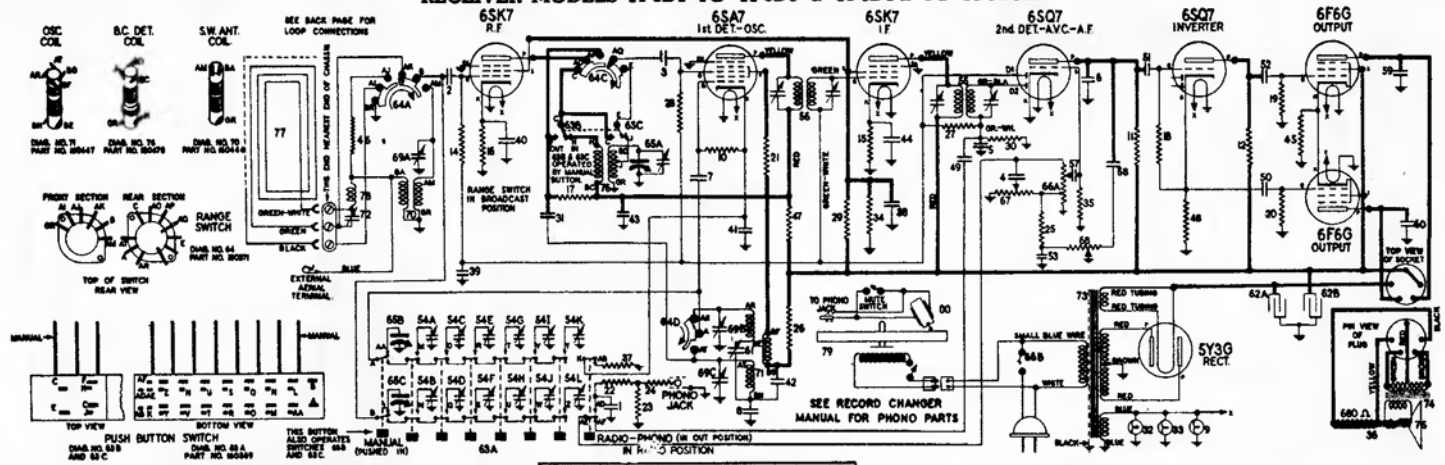

PUSH BUTTON TRIMMER RANGES

TRIMMER COMPONENTS	11-8D RANGE	11-8D-Z RANGE
54K & 54L	540 KC. to 1000 KC.	540 KC. to 1000 KC.
54I & 54J	540 KC. to 1000 KC.	540 KC. to 1000 KC.
54G & 54H	540 KC. to 1000 KC.	750 KC to 1375 KC.
54E & 54F	750 KC to 1375 KC.	750 KC to 1375 KC.
54C & 54D	750 KC to 1375 KC.	990 KC. to 1550 KC.
54A & 54B	990 KC. to 1550 KC.	990 KC. to 1550 KC.

SOCKET VOLTAGES

RANGE SWITCH IN BROADCAST POSITION
VOLUME ON FULL WITH NO SIGNAL

MANUAL BUTTON PUSHED IN
DIAL TUNED TO 540 KC

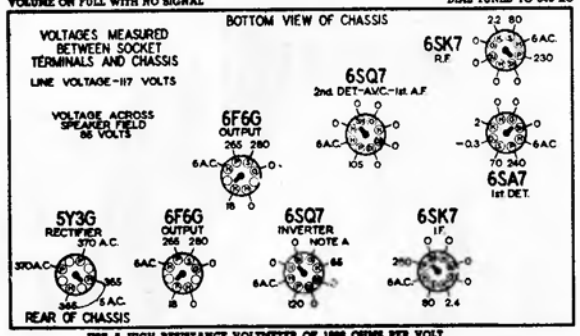

USE A HIGH RESISTANCE VOLTMETER OF 1000 OHMS PER VOLT

NOTE A: The voltage between chassis and the grid of the 6SQ7 Phase Inverter is 65 volts. This voltage cannot be measured with a meter of 1000 ohms per volt because of the high resistance of resistor No. 18.

SERVICE DATA FOR THE RECORD CHANGER IS IN SEPARATE BOOKLET FORM J-22200.

ELECTRICAL PARTS

Diagram Number	Part Number	Description	List Price
1	81155	Condenser—500 mmfd. micar	$ .25
2 to 4	83539	Condenser—mica. 260 mmfd.	.20
5-6	83793	Condenser—mica. 110 mmfd.	.20
7	85563	Condenser—micr 28 mmfd.	.15
8	88587	Condenser—micr .0042 mfd.	.35
9	85296	Lamp—Turntable light, 6 to 8 volt (Mazda 51)	.16
10	110552	Resistor—carbon 47,000 ohms ¼ watt	.12
11 to 13	110553	Resistor—carbon 220,000 ohms ¼ watt	.12
14	110554	Resistor—carbon 1 megohm ¼ watt	.12
15-16	110556	Resistor—carbon 330 ohms ¼ watt	.12
17	110557	Resistor—carbon 4700 ohms ¼ watt	.12
18 to 20	110559	Resistor—carbon 470,000 ohms ¼ watt	.12
21	110560	Resistor—carbon 100 ohms ¼ watt	.12
22 to 24	110564	Resistor—carbon 100,000 ohms ¼ watt	.12
25	110566	Resistor—carbon 33,000 ohms ¼ watt	.12
26	110567	Resistor—carbon 15,000 ohms ¼ watt	.15
27	118570	Resistor—carbon 2.2 meg. ¼ watt	.15
28	110578	Resistor—carbon 68,000 ohms ¼ watt	.12
29	110581	Resistor—carbon 18,000 ohms 2 watt	.30
30	110584	Resistor—carbon 330,000 ohms ¼ watt	.12
31	161315	Condenser—5 mmfd. (twisted wire)	.18
32-33	112636	Lamp—dial (frosted) 6-8 volt	.25
34	112954	Resistor—carbon 10,000 ohms 1 watt	.16
35	112975	Resistor—carbon 10 meg. ¼ watt	.12
36	M-115110	Speaker—12 inch	12.00
37	116077	Resistor—carbon 150 ohms ¼ watt	.12
38	116825	Condenser—.1 mfd. 600 volt	.25
39 to 44	118819	Condenser—.05 mfd. 600 volt	.28
45	117570	Resistor—wire wound 260 ohms 2 watt	.24
46	118904	Resistor—carbon 400 ohms ¼ watt	.10
47	118824	Resistor—carbon 1500 ohms ½ watt	.12
48	118825	Resistor—carbon 180,000 ohms ¼ watt	.12
49 to 52	119193	Condenser—.01 mfd. 600 volt	.15
53	117571	Condenser—.008 mfd. 600 volt	.16
54A to 54L	119662	Condenser—P. B. Trimmer (low freq.)	.24
	119663	Condenser—P. B. Trimmer (med. freq.)	.24
	119664	Condenser—P. B. Trimmer (high freq.)	.24
55	119024	Transformer—2nd I. F.	1.15
56	119042	Transformer—1st I. F.	1.10
57-58	119817	Condenser—.004 mfd. 600 volt	.15
59-60	119975	Condenser—.002 mfd. 600 volt	.15
61	119934	Condenser—padder	.36
62A-62B	160006	Condenser—electrolytic { A-30 mfd. 450 volts; B-15 mfd 450 volts }	1.50
63A to 63C	160369	Push button switch	3.00
64A to 64D	160371	Range switch	1.00
65A to 65C	160373	Condenser—variable tuning	3.20
66A-66B	160412	Volume control—2 meg. (with switch)	1.40
67	160413	Tone control (5 meg.) treble	.85
68	160414	Tone control (1 meg.) bass	.95
69A to 69C	160415	Condenser—trimmer 3 section	.48
70	160444	Coil—short wave antenna	.54
71	160447	Coil—oscillator	.90
72	160449	Condenser—trimmer for loop	.18
73	160450	Transformer—power (50-60 cycle)	6.35
74	M-160464	Transformer—output for M-115110 speaker	1.80
75	M-160465	Cone & voice coil for M-115110 speaker	1.80
76	160478	R. F. coil (interstage B.C.)	.80
77	160572	Loop antenna complete	3.80
78	161228	Coil—loop compensating	.25
79	160086	Motor (60 cycle)	6.95
98	161299	Crystal cartridge	5.00

MANUAL OF 1941 MOST POPULAR SERVICE DIAGRAMS

STROMBERG-CARLSON NO. 515 RADIO RECEIVERS

STROMBERG-CARLSON TELEPHONE MANUFACTURING COMPANY
ROCHESTER, NEW YORK

Input Power Rating ..... 140 Watts
Intermediate Frequency ..... { 455 Kilocycles (Amplitude Modulation) / 4.3 Megacycles (Frequency Modulation)

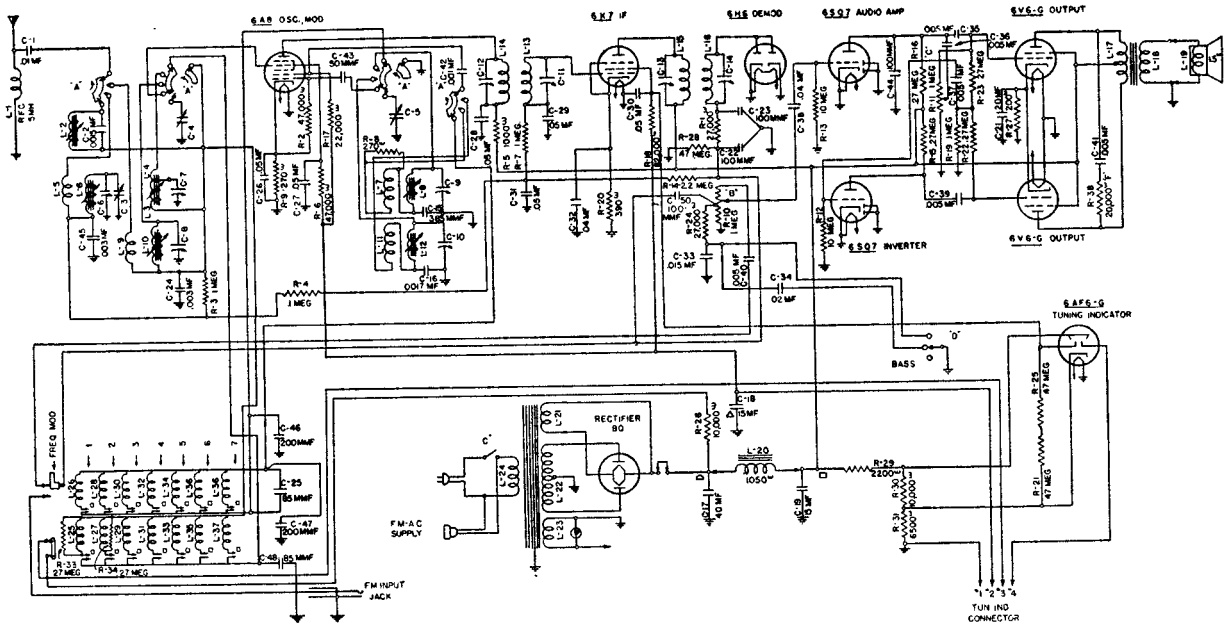

'A' - RANGES
'B' - VOLUME
'C' - OFF-ON-TONE
'O' - BASS
I.F. - 455 K.C.

Wiring and Schematic Diagram
Amplitude Modulation

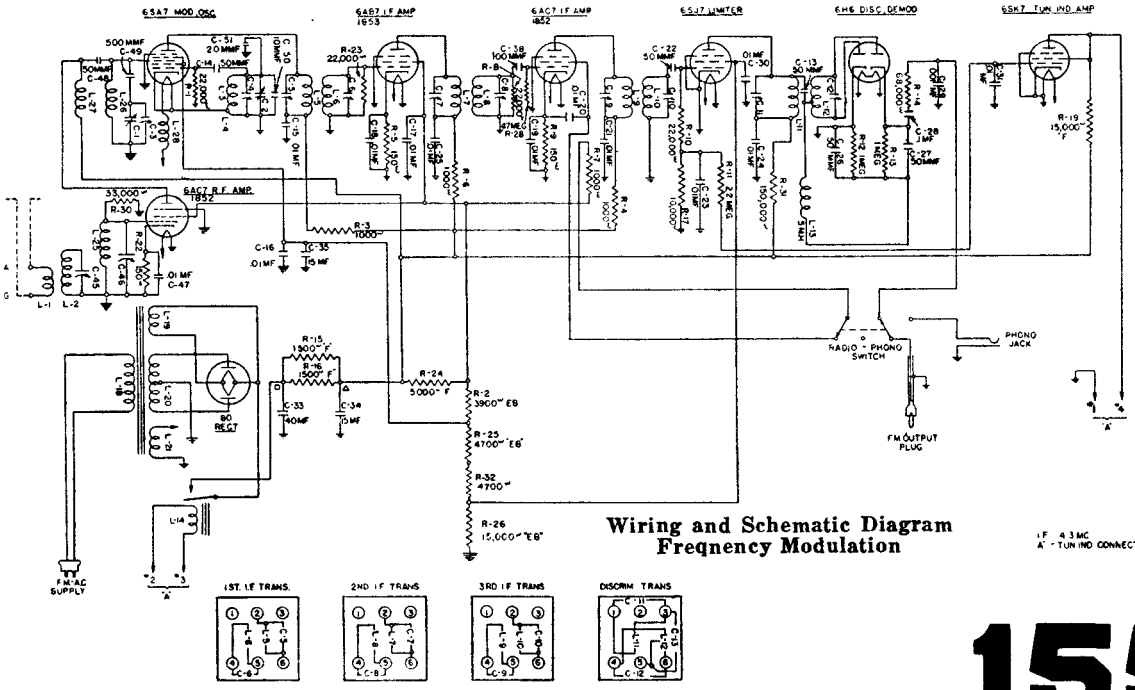

Wiring and Schematic Diagram
Freqnency Modulation

I.F. - 4.3 MC
'A' - TUN IND CONNECTOR

COMPILED BY M. N. BEITMAN, SUPREME PUBLICATIONS

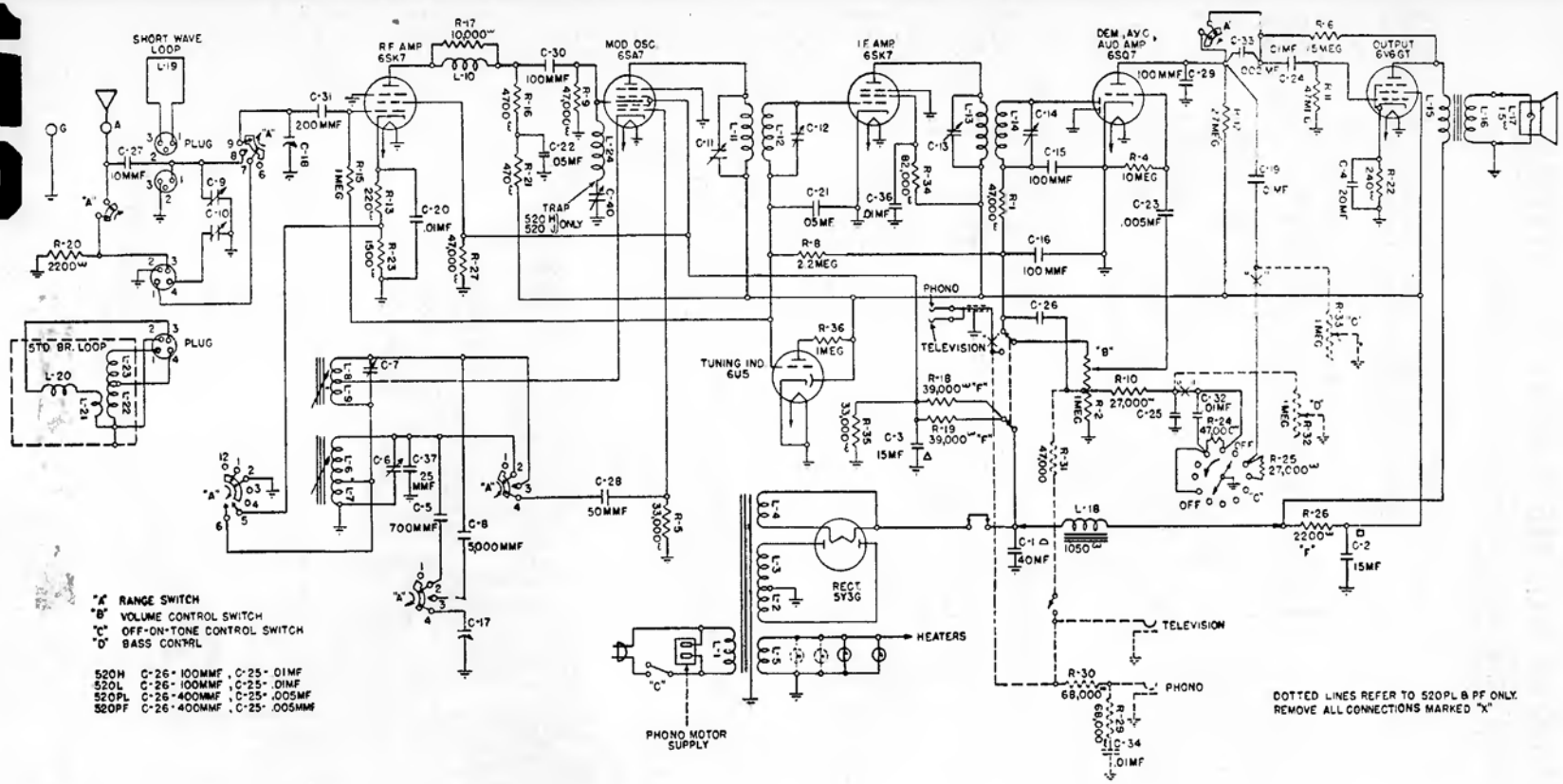

		TERMINALS OF SOCKETS							
Tube	*Circuit*	1	2	3	4	5	6	7	8
6SK7	R. F. Amplifier	0	0	0	0	+3*	+115	*6.3*	+200
6SA7	Modulator and Oscillator	0	0	+250	+115	0	0	*6.3*	0
6SK7	I. F. Amplifier	0	0	0	0	+2	+100	*6.3*	+250
6SQ7	Demodulator, A. V. C., Audio	0	0	0	0	0	+95	*6.3*	0
6V6GT	Output	0	0	+300	+250	0	0	*6.3*	+12*
6U5	Tuning Indicator	*6.3*	+90	0	+250	0	0	—	—
5Y3G	Rectifier	0	+400	0	*385*	0	*385*	0	+400
Speaker Socket	—	+310	0	0	+400	+400	0	+400	—

Stromberg-Carlson

Model 520

I.F. 455 KC.

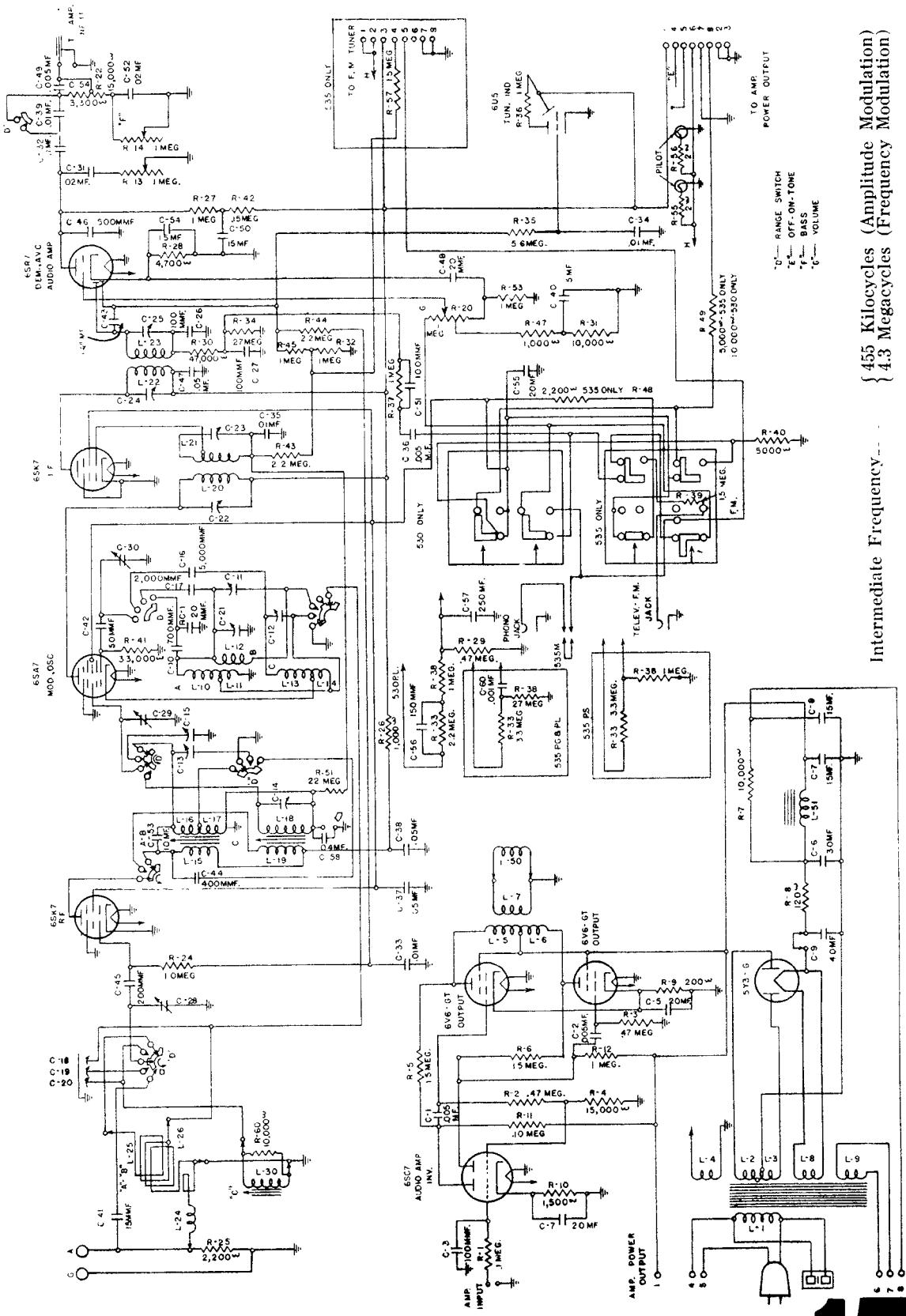

Intermediate Frequency — { 455 Kilocycles (Amplitude Modulation) / 4.3 Megacycles (Frequency Modulation)

STROMBERG-CARLSON NO. 530 AND NO. 535 RADIO RECEIVERS

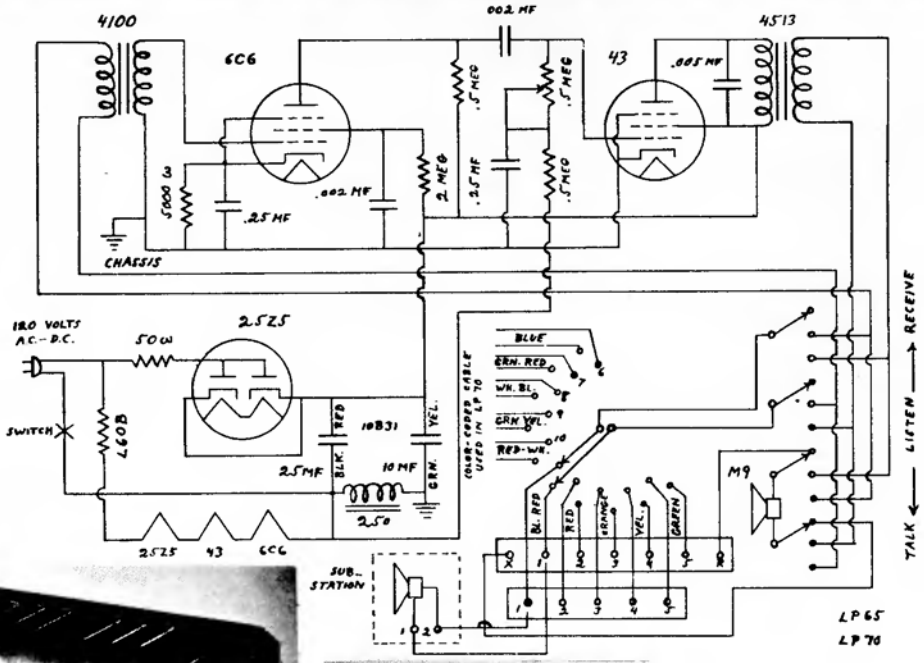

Talk-A-Phone Mfg. Co.

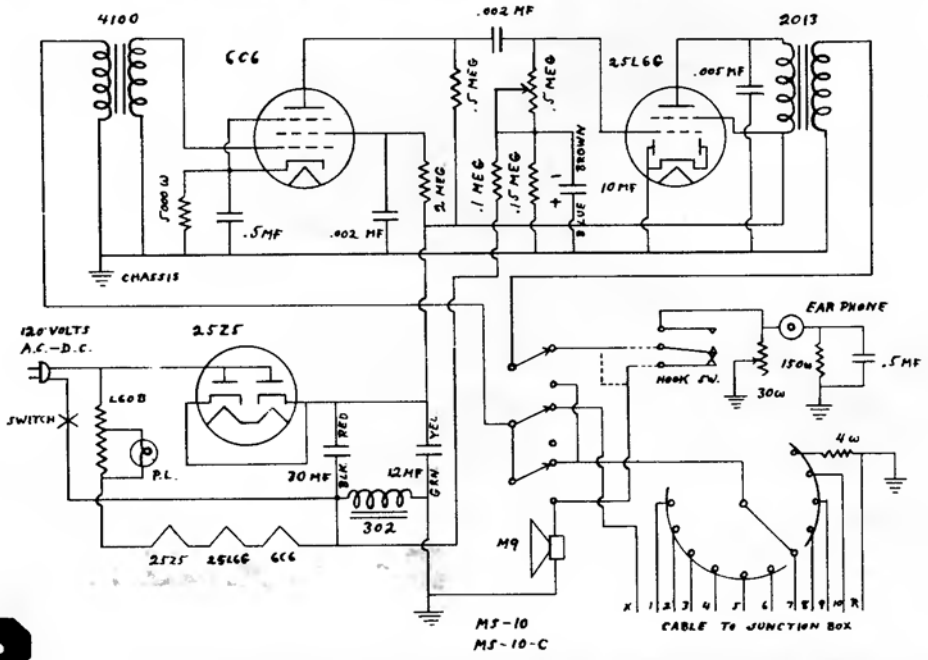

COMPILED BY M. N. BEITMAN, SUPREME PUBLICATIONS

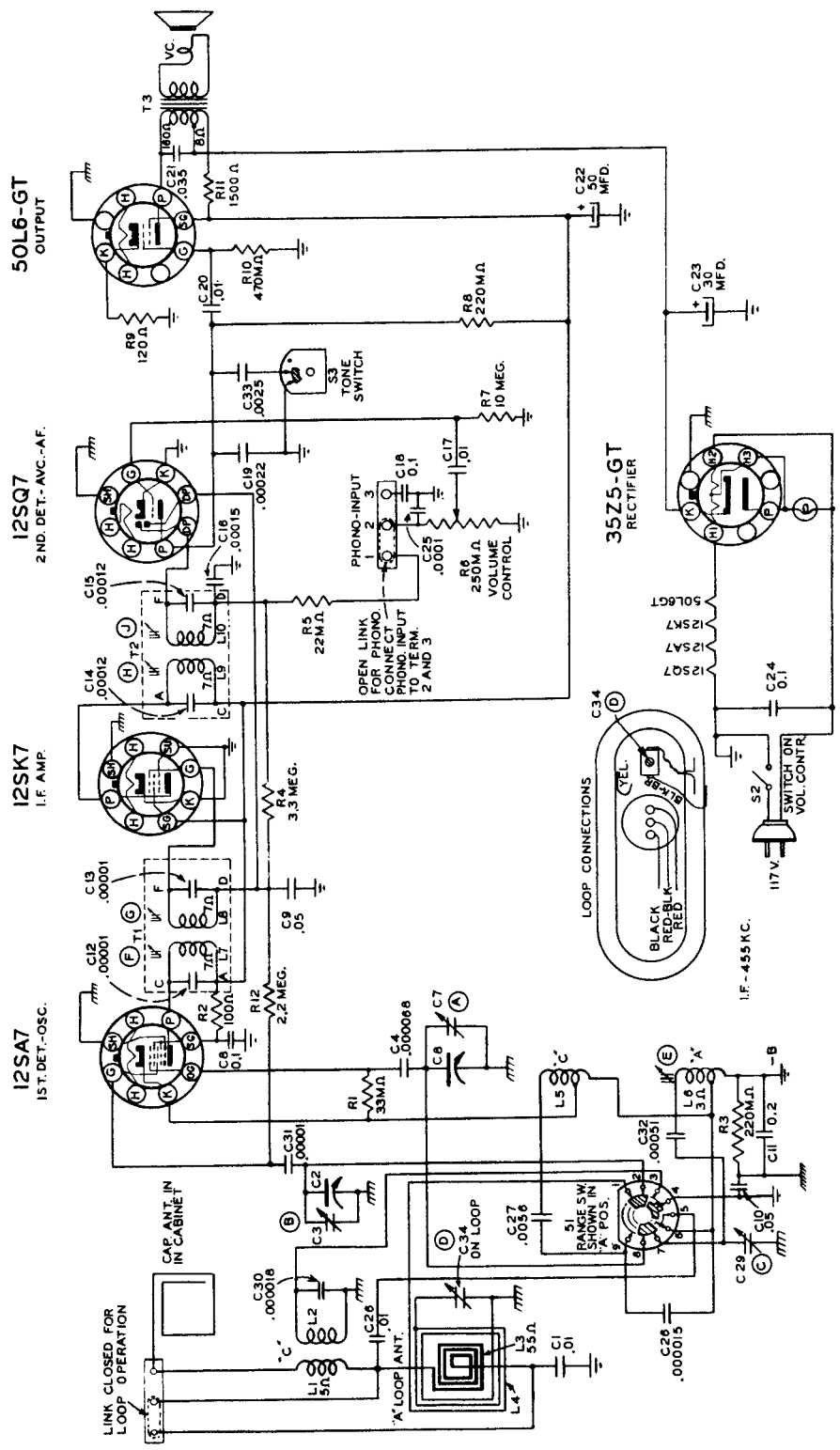

DELCO MODELS R-1176 AND R-1181 CIRCUIT DIAGRAM

DELCO MODELS R-1171, R-1172, R-1173

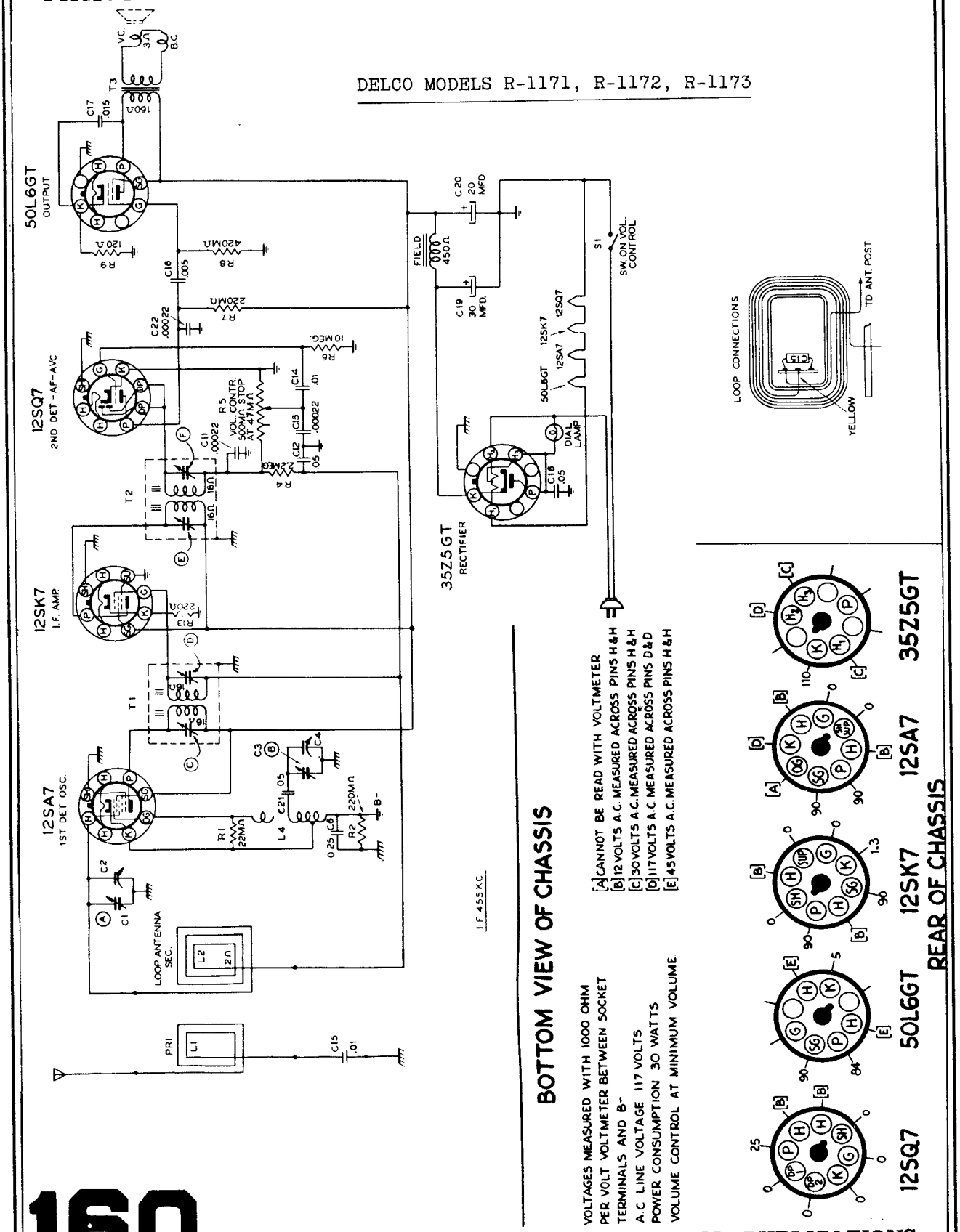

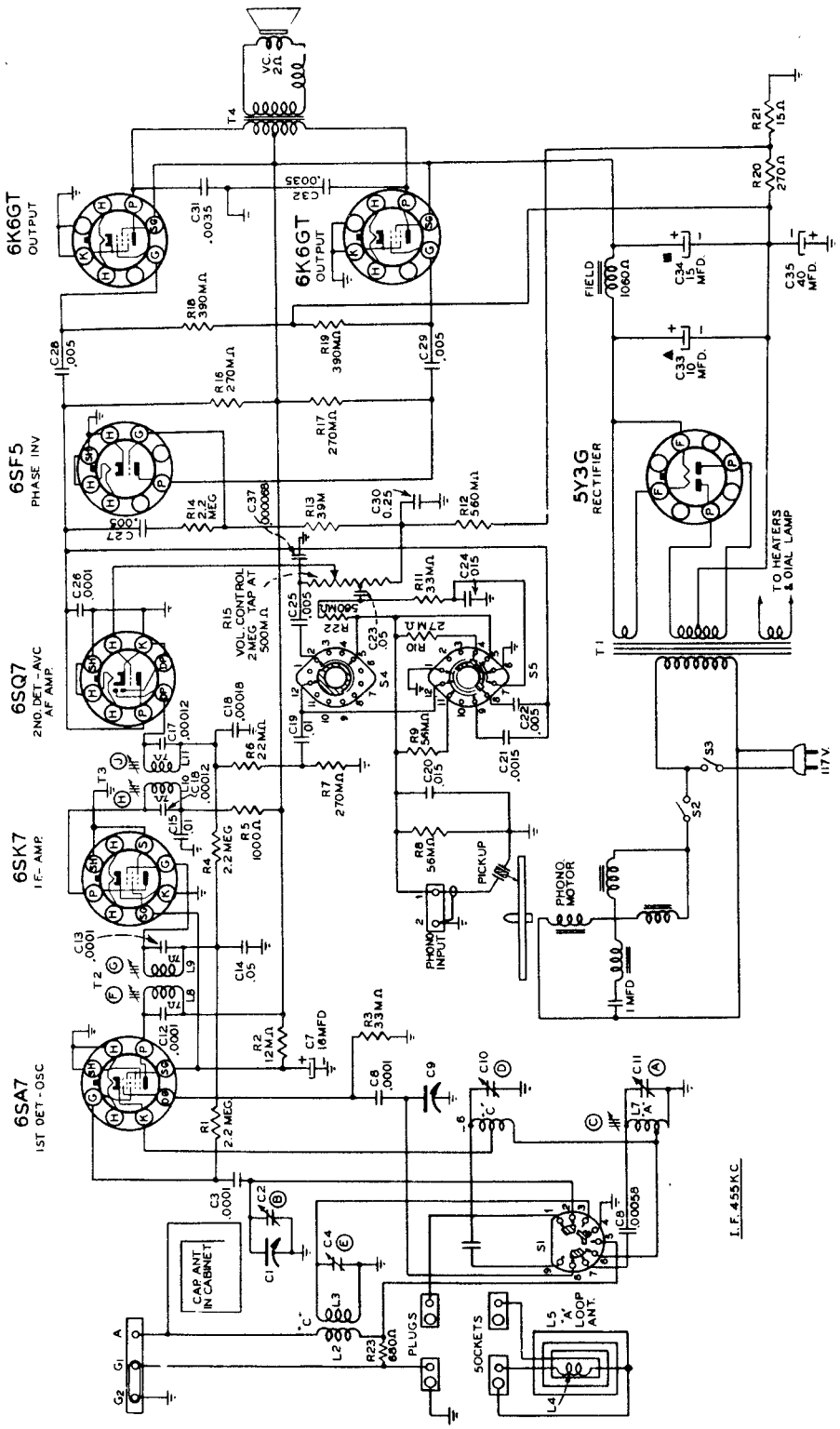

DELCO MODELS R-1186 AND R-1188 CIRCUIT DIAGRAM

UNITED MOTORS SERVICE
INCORPORATED
GENERAL OFFICES—DETROIT

SERVICE INSTRUCTIONS--DELCO MODEL R-1186 AND R-1188 COMBINATION RADIO AND PHONOGRAPH

ADJUSTMENTS FOR PUSH-BUTTON TUNING: The push buttons should be adjusted after the receiver has been operating for a brief warm-up period. Each button may be set up to any standard broadcast station. The preferable arrangement is to adjust for stations in the order of frequency, from low to high. Proceed as follows:

1. Press down on the first push button and hold it down. The screw in back of the push button is now accessible and should be loosened one or two turns with a screwdriver.

2. While still holding down the push button, tune in the first station with the tuning knob, by Dial Tuning. When the station is heard at its best, tighten up the screw in back of the push button. Now let go of the push button, turn the tuning knob in order to detune and again press down the button and let go. To check repeat action.

3. Proceed to set up the other five push buttons in a similar manner.

BOTTOM VIEW OF CHASSIS

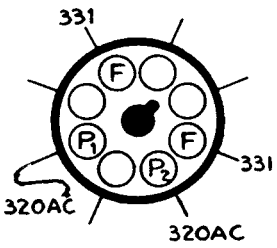

5Y3G

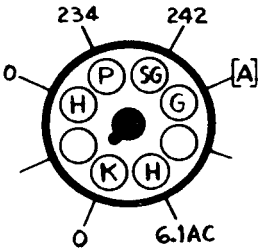

6K6GT

VOLTAGE MEASURED WITH 1000 OHM PER VOLT VOLTMETER BETWEEN SOCKET TERMINALS AND CHASSIS

A.C. LINE VOLTAGE 117 VOLTS
POWER CONSUMPTION 110 WATTS
[A] CANNOT BE MEASURED WITH VOLTMETER

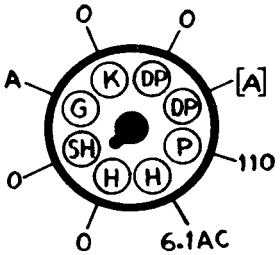

6SQ7

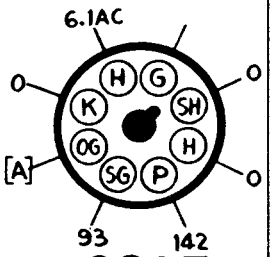

6SA7

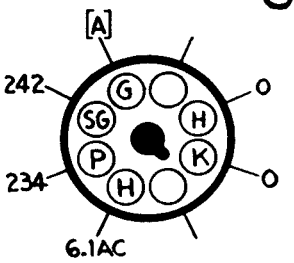

6K6GT

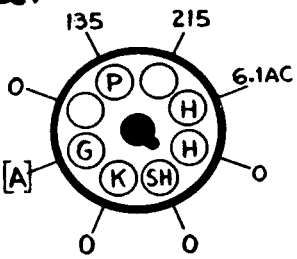

6SF5

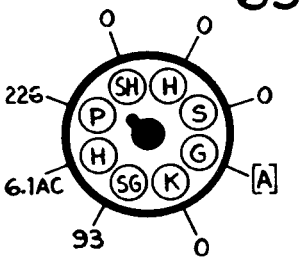

6SK7

REAR OF CHASSIS

COMPILED BY M. N. BEITMAN, SUPREME PUBLICATIONS

Wells-Gardner Series 6B18 Portable Radio

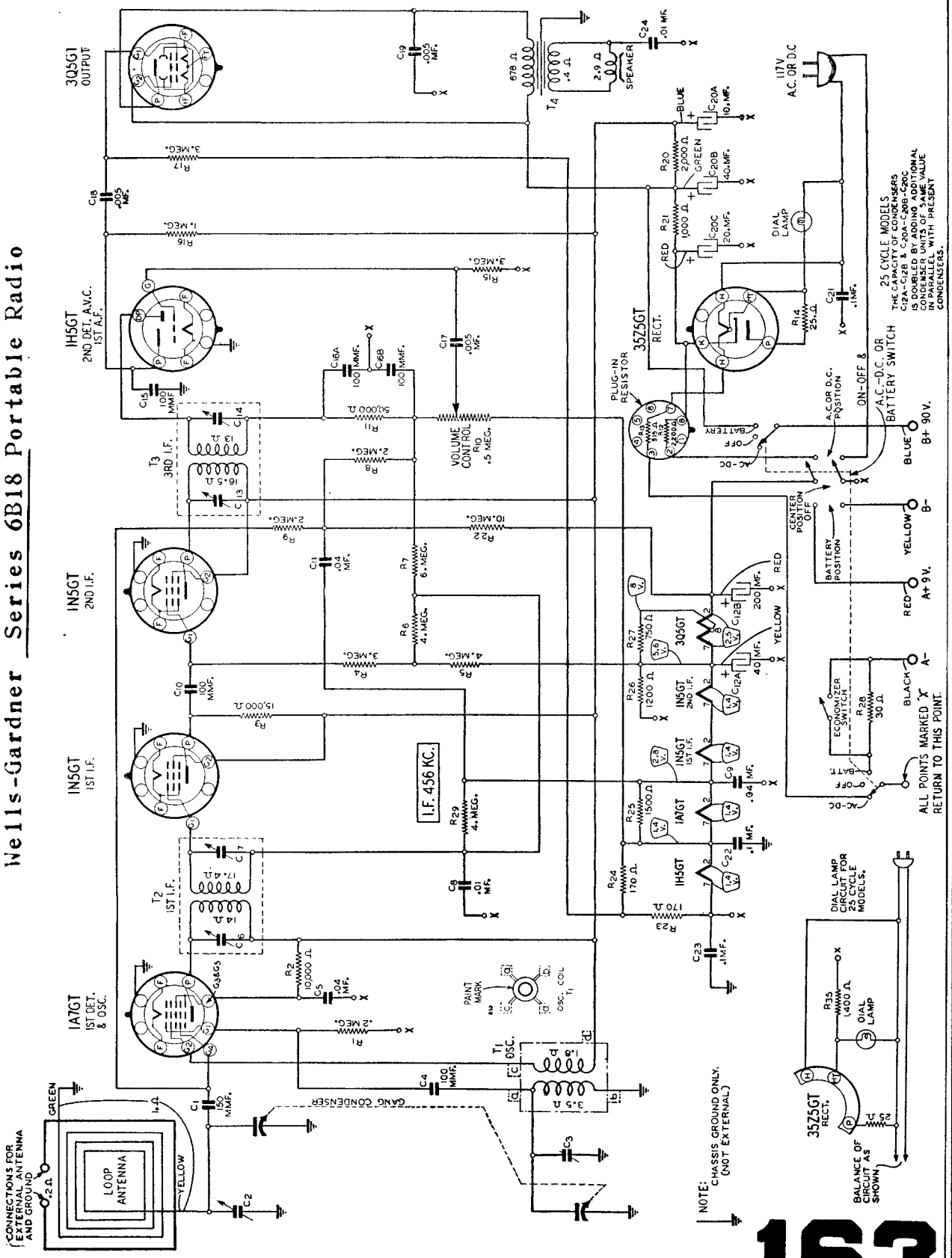

MANUAL OF 1941 MOST POPULAR SERVICE DIAGRAMS

Truetone MODEL D-1175

Generator	Connection at Radio	Dummy Antenna	Range Switch	Dial	Trimmers to Tune	Sensitivity
I. F. 456 K. C.	Center Stator of Variable	.1 MFD.	A	H. F. End	I. F. Transformers	65—70MV.
B. C. 1725 K. C.	Antenna	200 MMF.	A	H. F. Limit of Travel	B. C. Oscillator	
1400 K. C.	Antenna	200 MMF.	A	1400	B. C. Antenna and Loop	5-10 MV.
600 K. C.	Antenna	200 MMF.	A	Rock Rotor	Padder	10-15 MV.
P. B. 6.0 M. C.	Antenna	400 Ohm	B	6.0 M. C.	P. B. Osc. P. B. Ant.	25 MV.
2.2 M. C.	Antenna	400 Ohm	B	2.2 M. C.	Check	40 MV.
31M. 9.6 M. C.	Antenna	400 Ohm	C	9.6 M. C.	31M. Ant. 31M. Osc.	25 MV.
25M. 11.6 M. C.	Antenna	400 Ohm	D	11.6 M. C.	25M. Ant. 25M. Osc.	30 MV.
19M. 15.2 M. C.	Antenna	400 Ohm	E	15.2 M. C.	19M Ant. 19M. Osc.	40 MV.

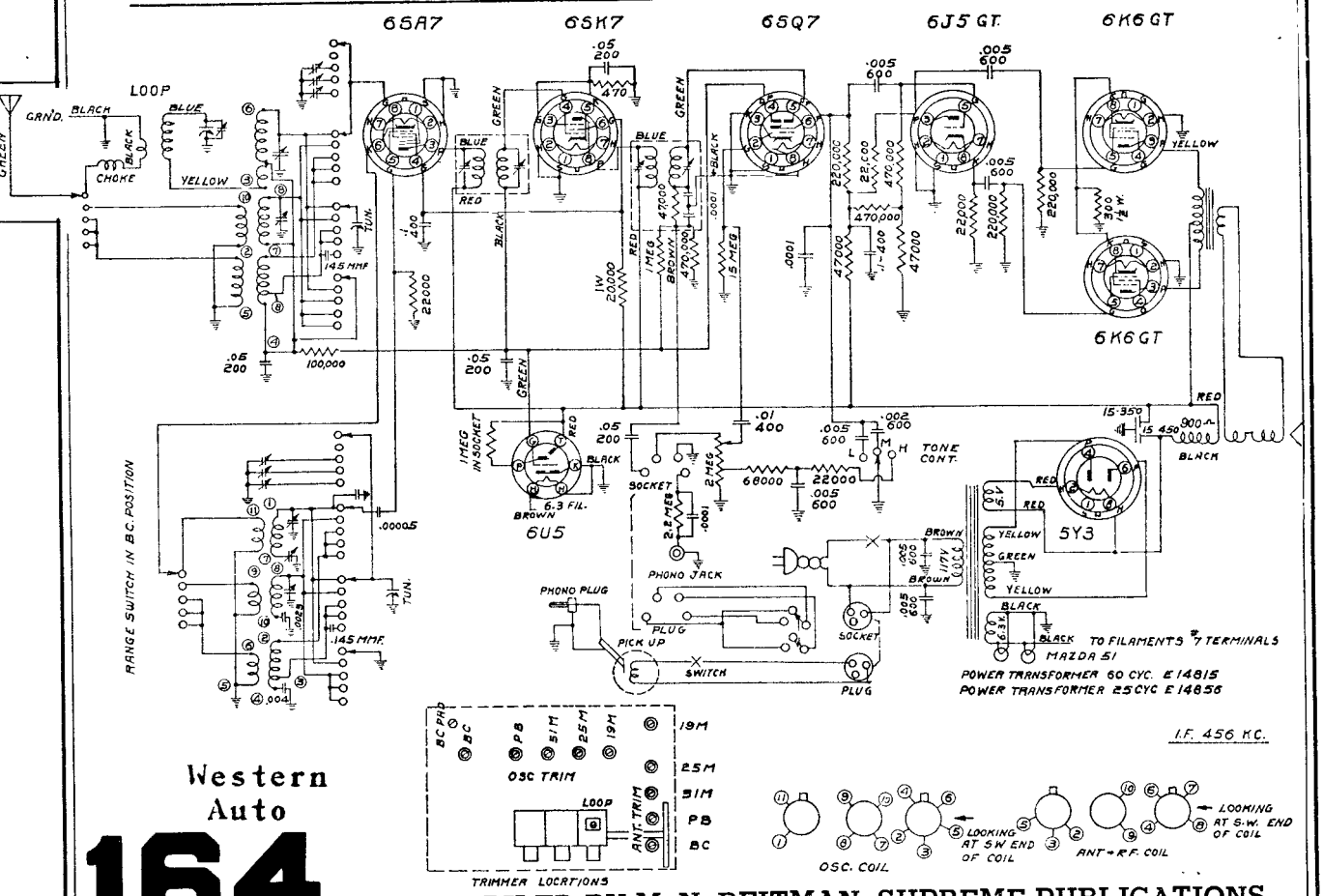

Western Auto

164

COMPILED BY M. N. BEITMAN, SUPREME PUBLICATIONS

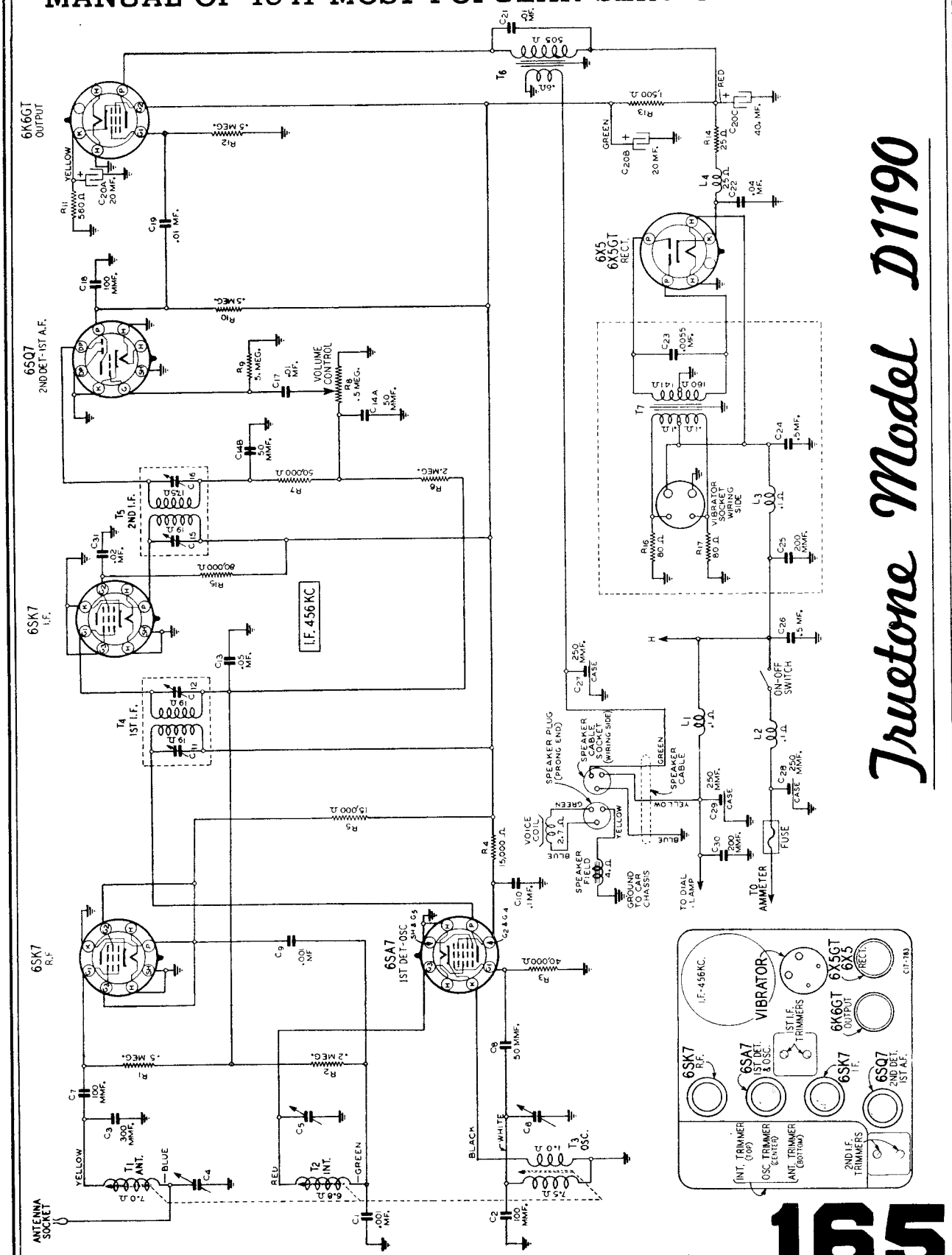

Truetone Model D1190

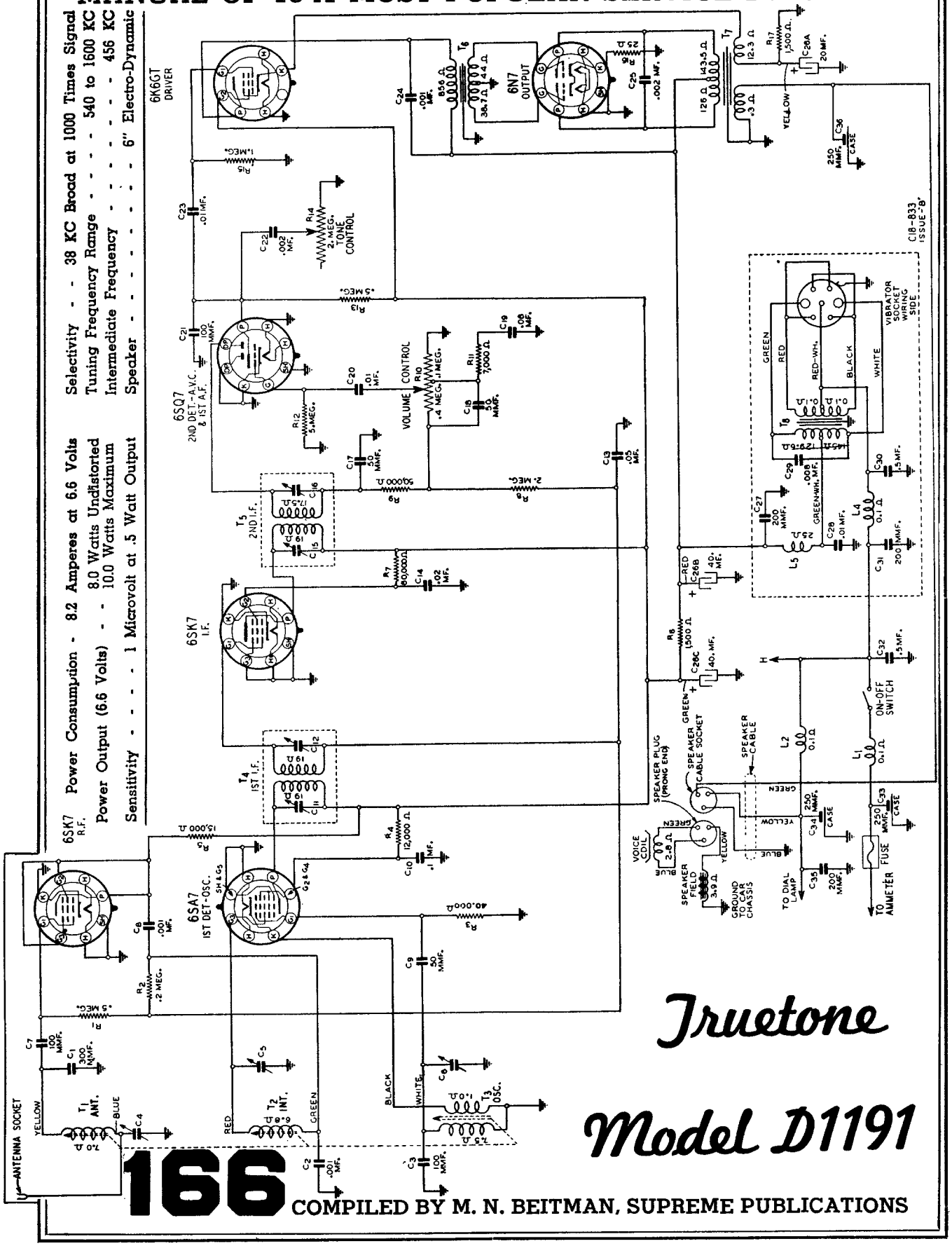

Truetone

Model D1191

Westinghouse Radio

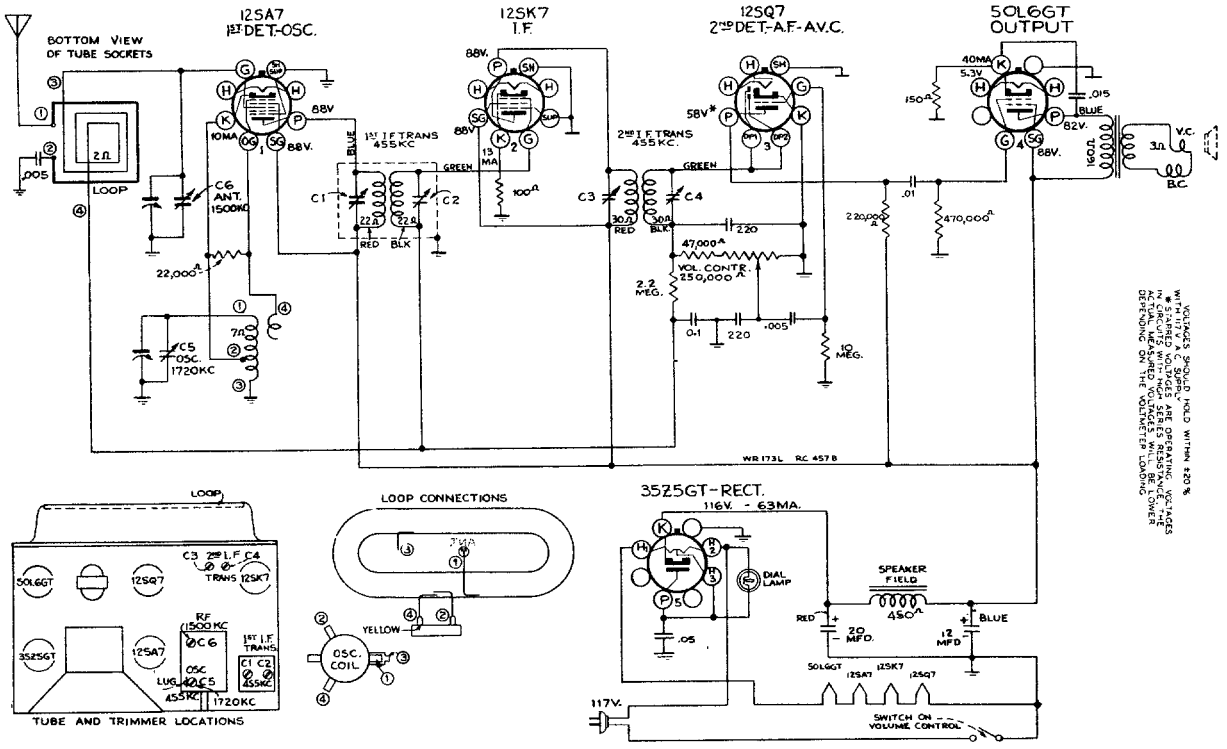

Schematic Circuit Diagram Model WR-173L

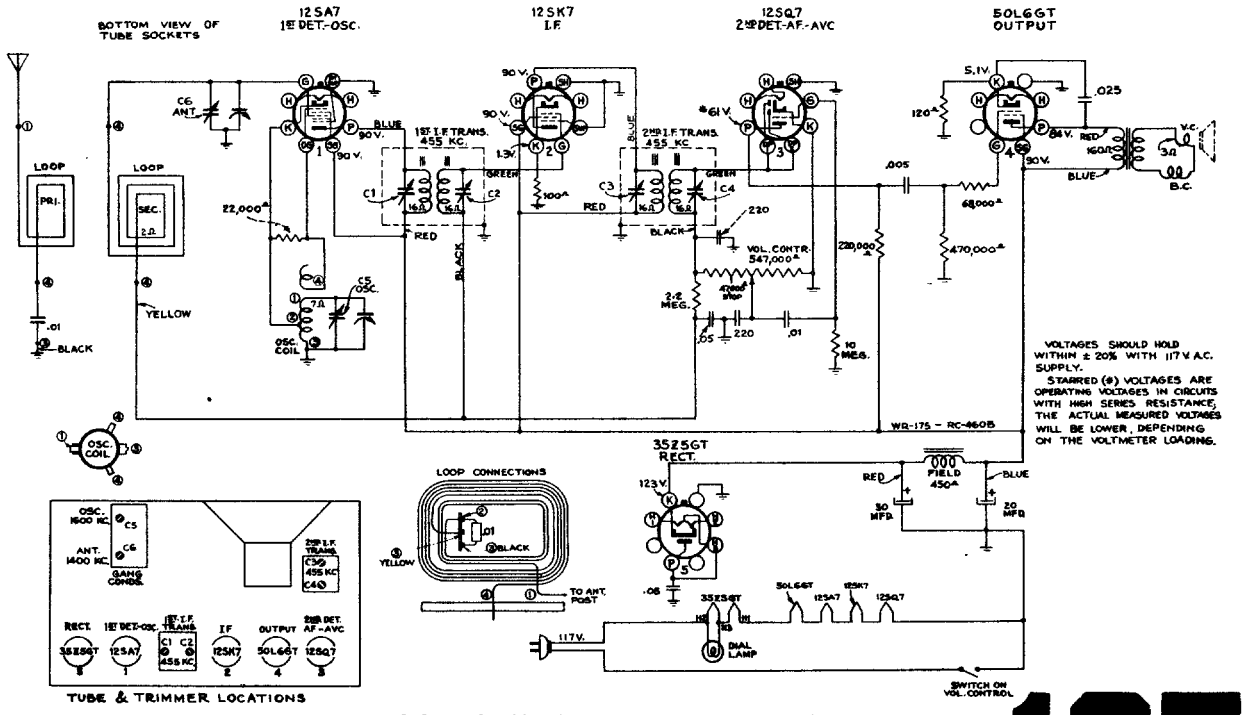

Schematic Circuit Diagram Model WR-175

Westinghouse Radio

Model WR-184

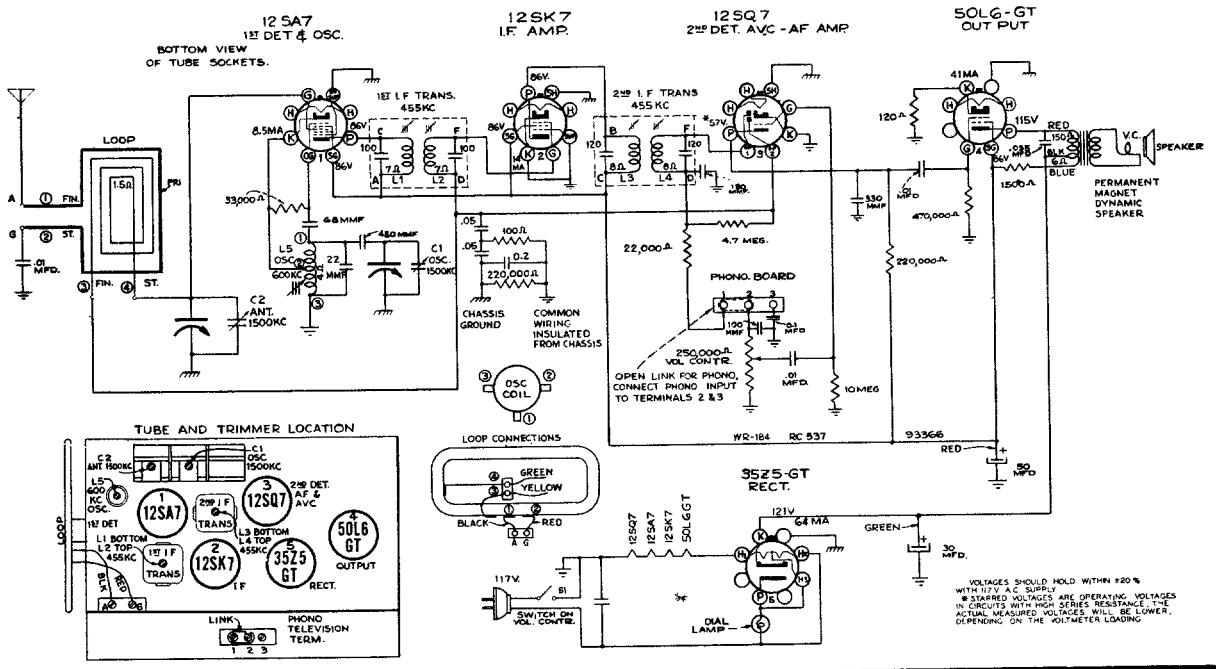

Models WR-682 & WR-682A

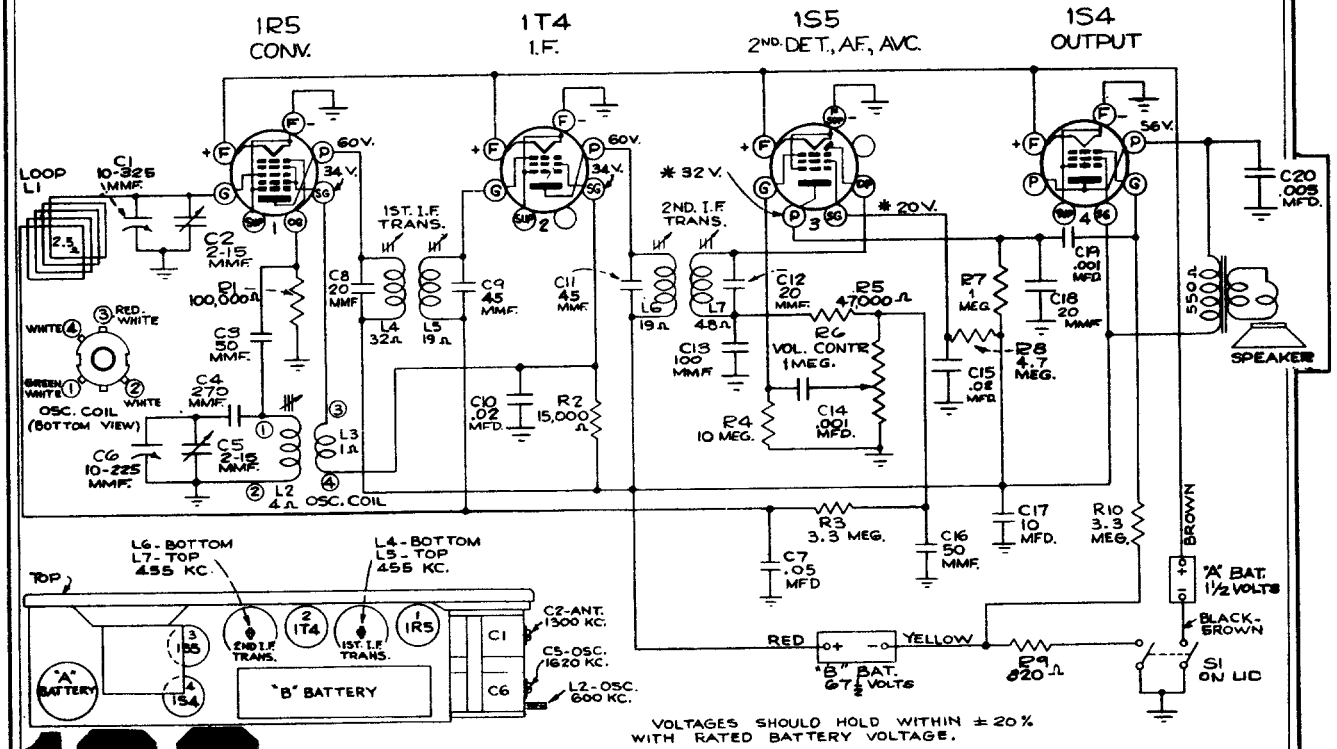

COMPILED BY M. N. BEITMAN, SUPREME PUBLICATIONS

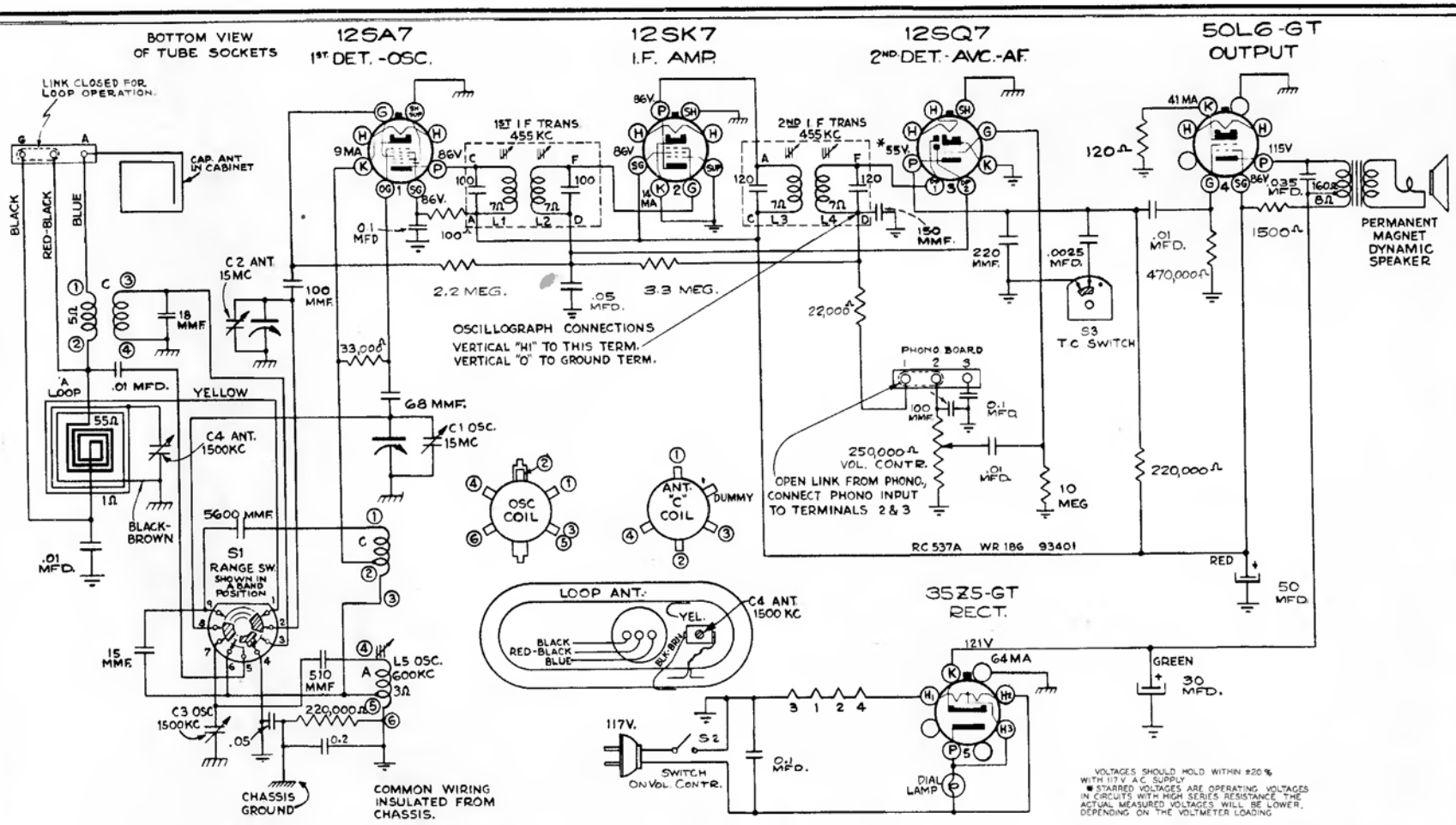

Adjustments for Push Button Tuning

1. Cut out the tabs for your six favorite stations and arrange them in order of frequency in the recesses on the push buttons.
2. Press down on the first push button and hold it down. The screw in back of the push button is now accessible and should be loosened one or two turns with a screwdriver.
3. While still holding down the push button, tune in the first station represented by the station tab with the tuning knob, by Dial Tuning. When the station is heard at its best, tighten up the screw in back of the push button. Now let go of the push button, turn the tuning knob in order to detune and again press down the button and let go. The station should be heard again. If not, repeat the above adjustment process until reception is satisfactory.
4. Proceed to set up the other five push buttons in a similar manner.

196

Westinghouse Radio

Models WR-186, WR-12X7

Westinghouse Radio
Model WR-388

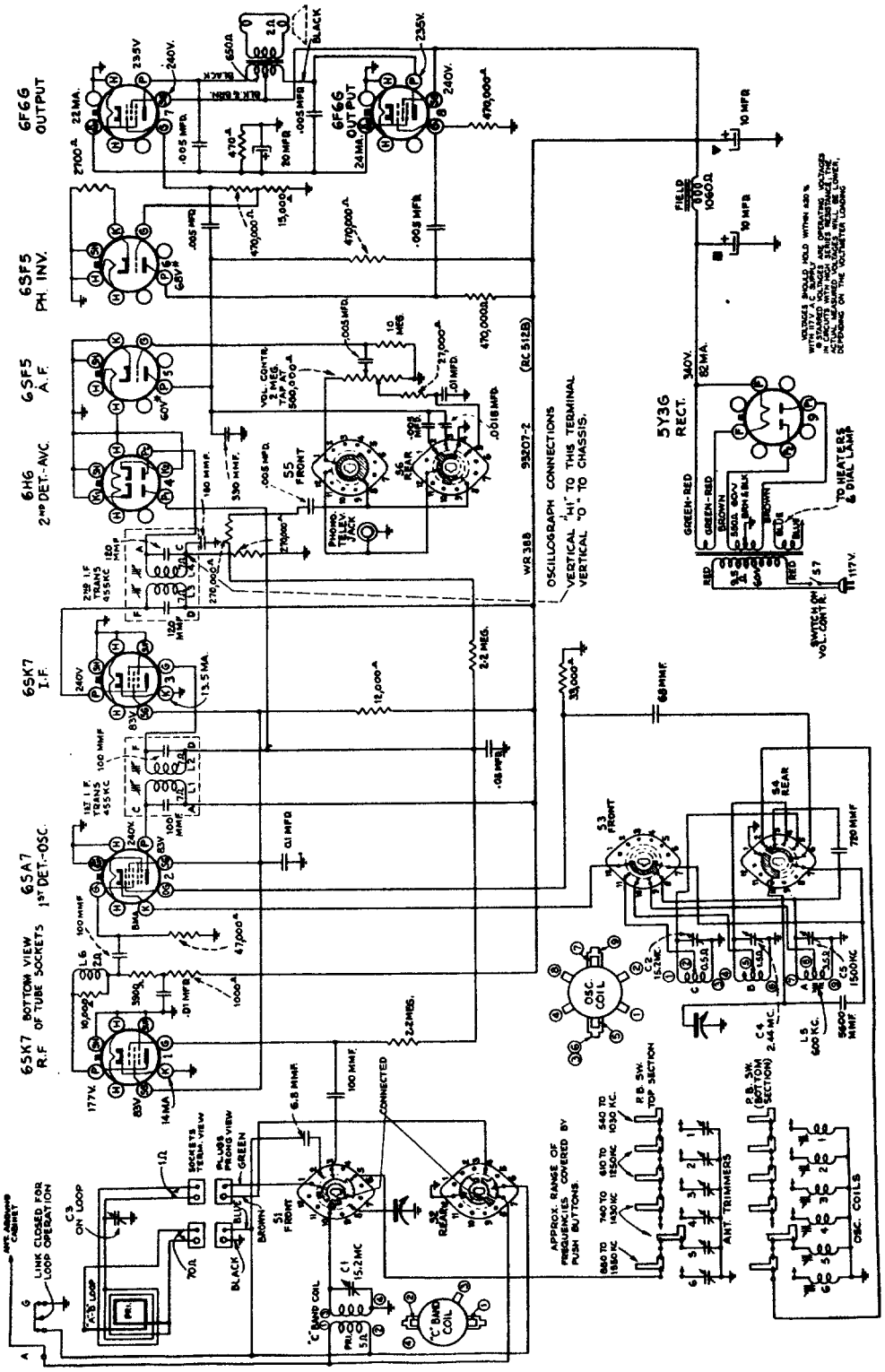

COMPILED BY M. N. BEITMAN, SUPREME PUBLICATIONS

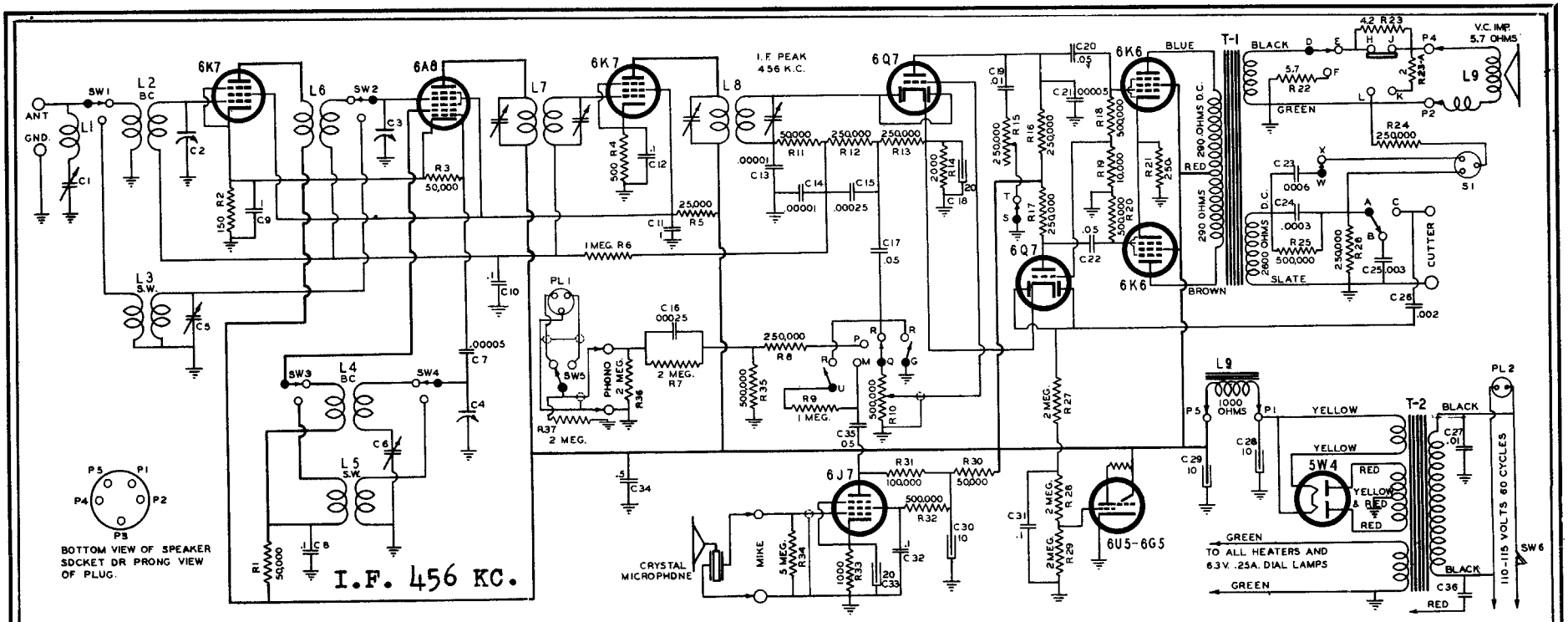

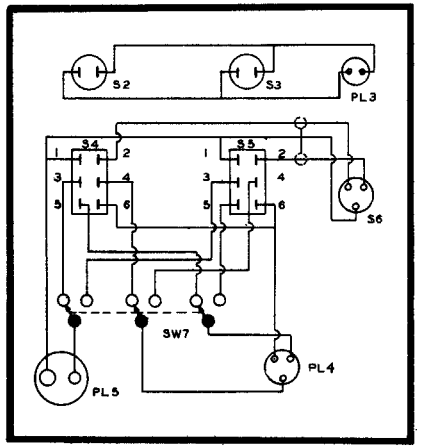

PANEL WIRING - MASTER UNIT
A-101

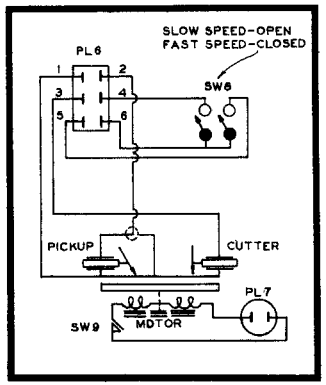

TURNTABLE UNIT
A-102

PLUG CONNECTIONS

PL1 (A-101 CHASSIS) TO S6 (A-101 PANEL)
PL2 (A-101 CHASSIS) TO PL3 (A-101 PANEL)
PL6 (A-102) TO S4 OR S5 (A-101 PANEL)
PL7 (A-102) TO S2 OR S3 (A-101 PANEL)
PL4 (A-101 PANEL) TO S1 (A-101 CHASSIS)
PL5 (A-101 PANEL) TO "CUTTER" SOCKET (A-101 CHASSIS)

PUSH BUTTON CIRCUIT FUNCTIONS	
NORMAL "UP" POSITION OF PUSH BUTTON SWITCHES INDICATED IN SCHEMATIC DIAGRAM	
1	OPENS Q-R, W-X, CLOSES Q-P, R-G
2	OPENS Q-R, CLOSES Q-M
3	FIRST POS. OPENS A-B, T-S, CLOSES U-R SECOND POS. OPENS Q-R, A-B, D-E, T-S CLOSES Q-M, A-C, D-F
4	FIRST POS. OPENS A-B, T-S, CLOSES A-C SECOND POS. OPENS A-B, T-S, H-J CLOSES A-C, K-L
NOTE - ALL OTHER CONTACT POSITIONS INDICATED IN DIAGRAM	

SERVICE DIAGRAMS

Wilcox-Gay Corporation

Models A-89, A-91, A-92, A-93, A-94, A-101, A-102.

See next page for details

MANUAL OF 1941 MOST POPULAR SERVICE DIAGRAMS

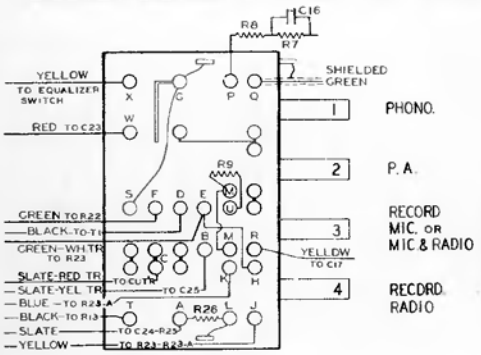

MODELS	CIRCUIT	PHONO-PLAYER
A-89	ILLUSTRATED	MANUAL
A-91	"	"
A-92	"	"
A-93	"	AUTOMATIC
A-94	"	"
A-101	SEE WIRING & NOTE A-101	USED WITH A-102
A-102	SEE NOTE A-102	DUAL TURNTABLE ONLY

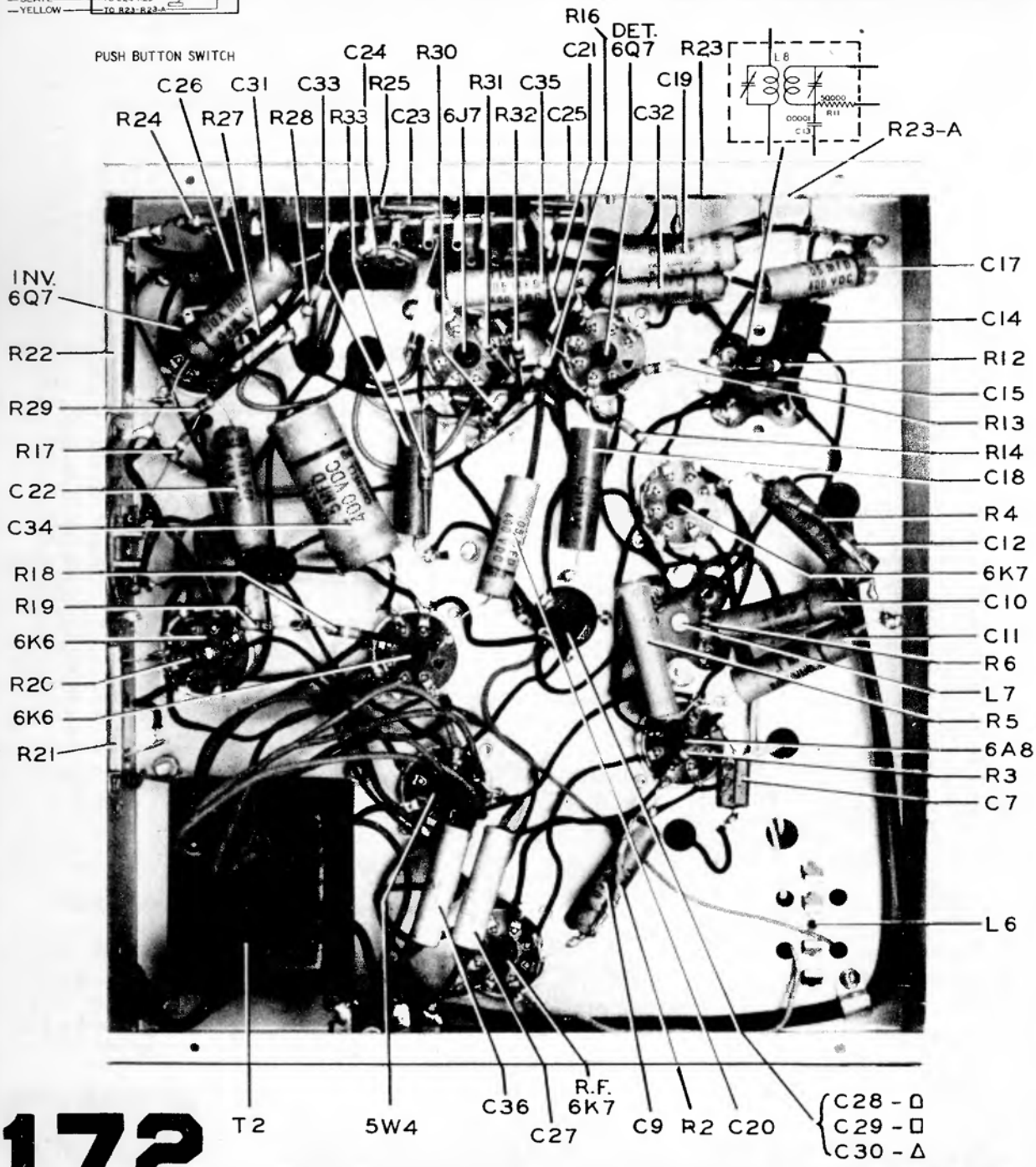

COMPILED BY M. N. BEITMAN, SUPREME PUBLICATIONS

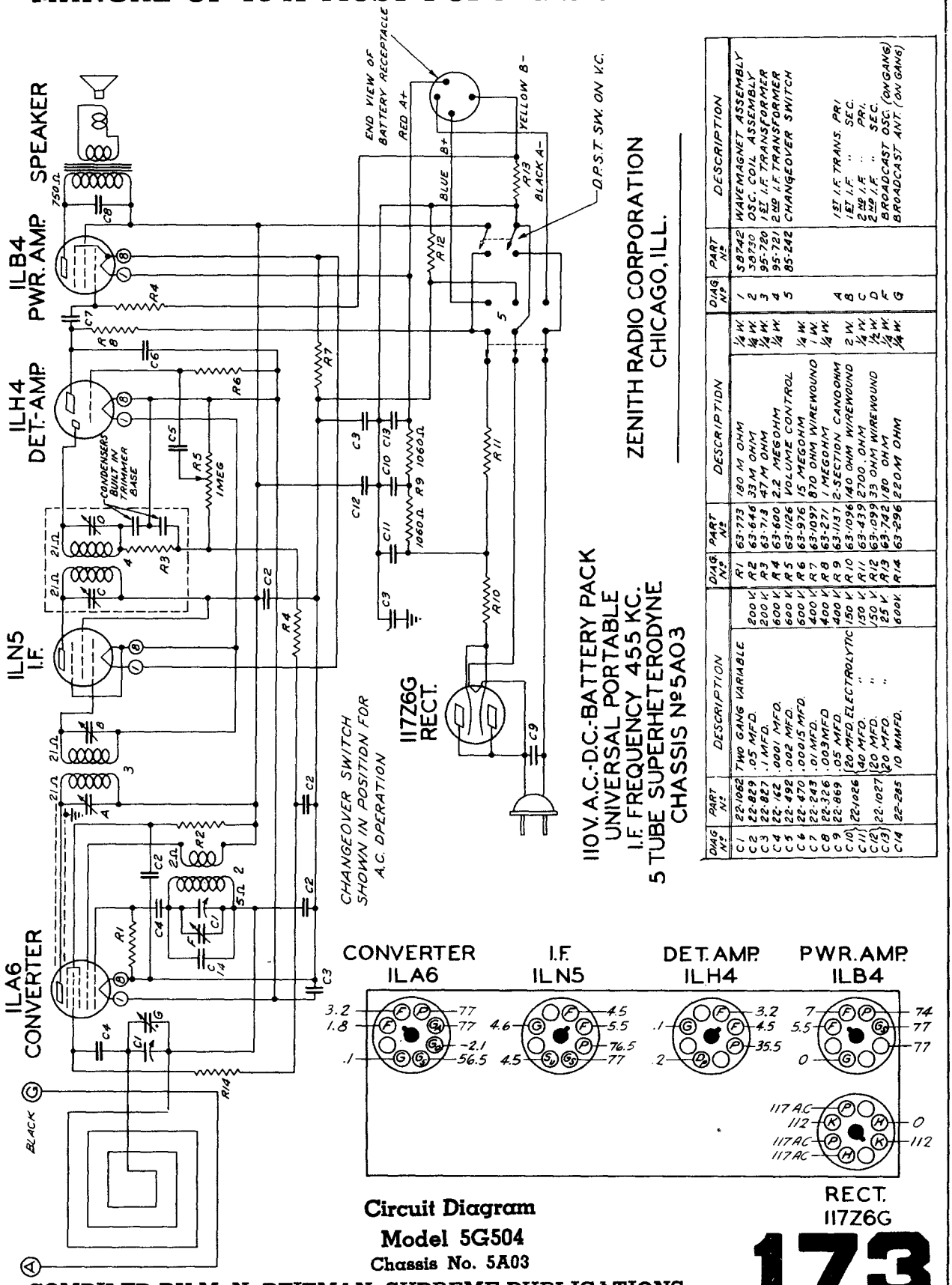

ZENITH RADIO CORPORATION
CHICAGO, ILL.

110V. A.C.-D.C.-BATTERY PACK
UNIVERSAL PORTABLE
I.F. FREQUENCY 455 KC.
5 TUBE SUPERHETERODYNE
CHASSIS Nº 5A03

DIAG. Nº	PART Nº	DESCRIPTION		DIAG. Nº	PART Nº	DESCRIPTION		DIAG. Nº	PART Nº	DESCRIPTION
C1	22-1062	TWO GANG VARIABLE		R1	63-773	180 M OHM	¼ W.	1	58742	WAVEMAGNET ASSEMBLY
C2	22-829	.05 MFD.	200 V.	R2	63-646	33 M OHM	¼ W.	2	58730	OSC. COIL ASSEMBLY
C3	22-827	.1 MFD.	200 V.	R3	63-713	47 M OHM	¼ W.	3	95-720	1ST I.F. TRANSFORMER
C4	22-162	.0001 MFD.	600 V.	R4	63-600	2.2 MEGOHM	¼ W.	4	95-721	2ND I.F. TRANSFORMER
C5	22-492	.002 MFD.	600 V.	R5	63-1126	VOLUME CONTROL	¼ W.	5	85-242	CHANGEOVER SWITCH
C6	22-470	.00015 MFD.	600 V.	R6	63-976	15 MEGOHM	¼ W.			
C7	22-243	.01 MFD.	400 V.	R7	63-1097	870 OHM WIREWOUND	1 W.			
C8	22-326	.003 MFD.	400 V.	R8	63-271	1 MEGOHM	¼ W.			
C9	22-869	.05 MFD.	400 V.	R9	63-1137	2-SECTION CANOHM	2 W.	A		1ST I.F. TRANS. PRI
C10		20 MFD. ELECTROLYTIC	150 V.	R10	63-1096	140 OHM WIREWOUND	2 W.	B		1ST I.F. " SEC.
C11	22-1026	40 MFD.	150 V.	R11	63-439	2700 OHM	¼ W.	C		2ND I.F. " PRI.
C12	22-1027	20 MFD.	150 V.	R12	63-1099	33 OHM WIREWOUND	¼ W.	D		2ND I.F. " SEC.
C13		20 MFD.	25 V.	R13	63-742	180 OHM	¼ W.	E		BROADCAST OSC. (ON GANG)
C14	22-285	10 MMFD.	600V.	R14	63-296	220 M OHM	¼ W.	G		BROADCAST ANT. (ON GANG)

Circuit Diagram
Model 5G504
Chassis No. 5A03

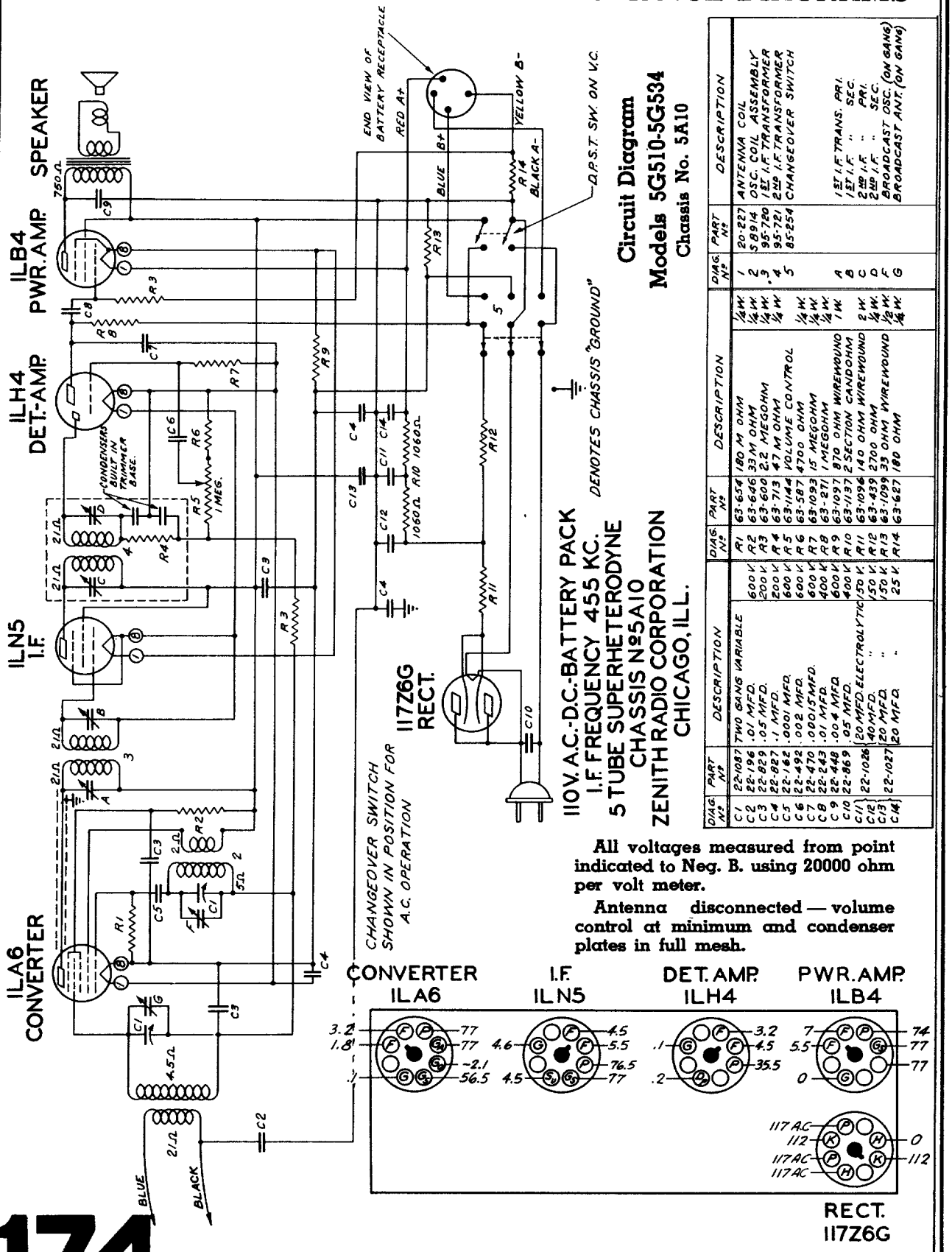

Circuit Diagram
Models 5G510-5G534
Chassis No. 5A10

110V. A.C.-D.C.-BATTERY PACK
I.F. FREQUENCY 455 KC.
5 TUBE SUPERHETERODYNE
CHASSIS №5A10
ZENITH RADIO CORPORATION
CHICAGO, ILL.

DIAG. №.	PART №.	DESCRIPTION
C1	22-1087	TWO GANG VARIABLE
C2	22-196	.01 MFD.
C3	22-829	.05 MFD.
C4	22-827	.1 MFD.
C5	22-162	.0001 MFD.
C6	22-492	.002 MFD.
C7	22-470	.00015 MFD.
C8	22-243	.01 MFD.
C9	22-448	.004 MFD.
C10	22-869	.05 MFD.
C11	22-1026	20 MFD. ELECTROLYTIC
C12		40 MFD. "
C13	22-1027	20 MFD. "
C14		20 MFD. "

DIAG. №.	PART №.	DESCRIPTION
R1	63-654	180 M OHM
R2	63-646	33 M OHM
R3	63-600	2.2 MEGOHM
R4	63-713	47 M OHM
R5	63-1144	VOLUME CONTROL
R6	63-587	4700 OHM
R7	63-1093	.15 MEGOHM
R8	63-271	1 MEGOHM
R9	63-1097	870 OHM WIREWOUND
R10	63-1137	2 SECTION CANDOHM
R11	63-1096	140 OHM WIREWOUND
R12	63-439	2700 OHM
R13	63-1099	33 OHM WIREWOUND
R14	63-627	180 OHM

DIAG. №.	PART №.	DESCRIPTION
1	20-227	ANTENNA COIL
2	5 8914	OSC. COIL ASSEMBLY
3	95-720	1ST I.F. TRANSFORMER
4	95-721	2ND I.F. TRANSFORMER
5	85-254	CHANGEOVER SWITCH
A		1ST I.F. TRANS. PRI.
B		1ST I.F. " SEC.
C		2ND I.F. " PRI.
D		2ND I.F. " SEC.
F		BROADCAST OSC. (ON GANG)
G		BROADCAST ANT. (ON GANG)

All voltages measured from point indicated to Neg. B. using 20000 ohm per volt meter.

Antenna disconnected — volume control at minimum and condenser plates in full mesh.

COMPILED BY M. N. BEITMAN, SUPREME PUBLICATIONS

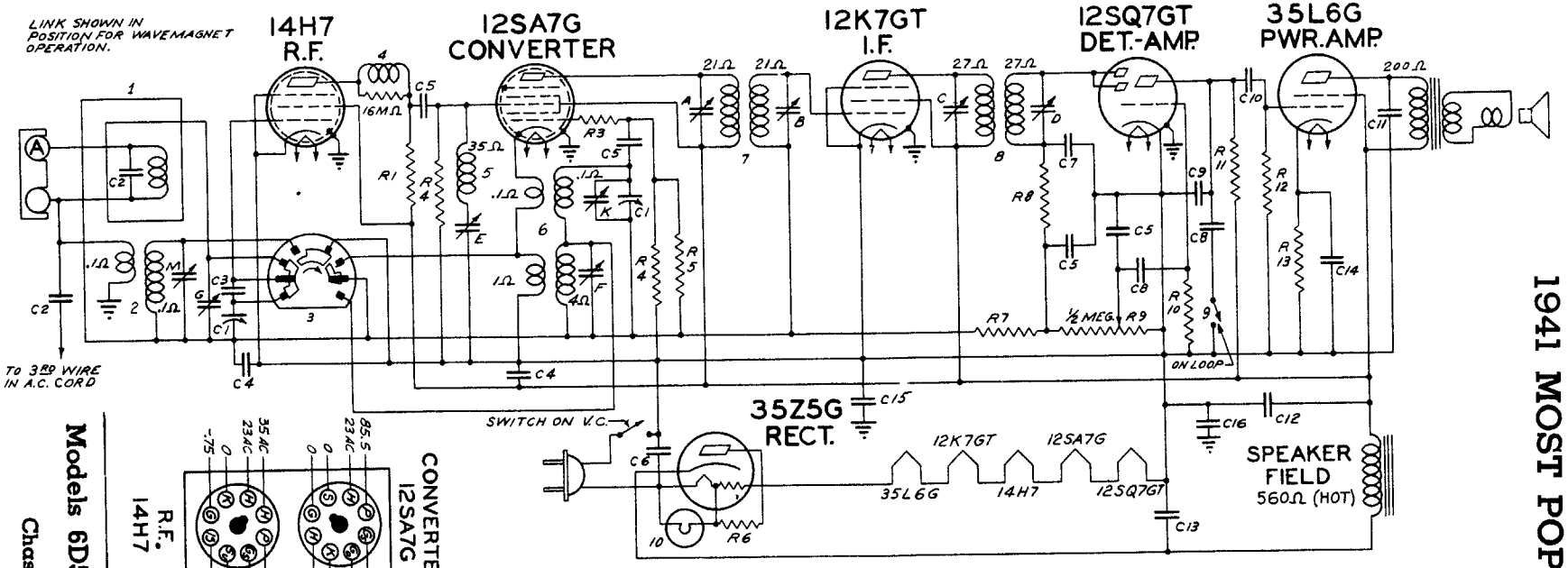

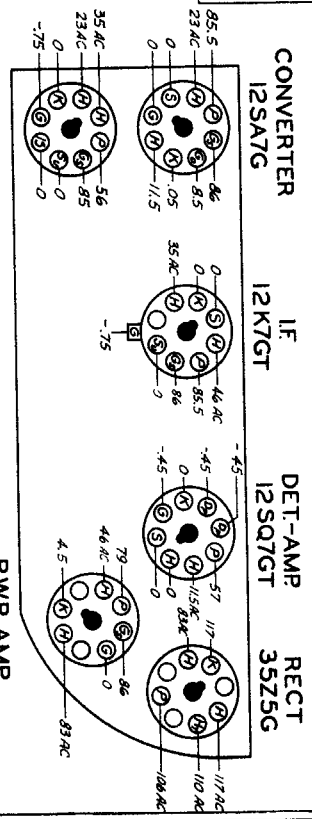

DENOTES CHASSIS "GROUND"

I.F. FREQUENCY 455KC.
6 TUBE SUPERHETERODYNE
CHASSIS Nº6A16A.C.-D.C. 2 BAND
ZENITH RADIO CORPORATION
CHICAGO, ILL.

8-22-40	C16 ADDED & 22-1157 WAS 22-467
8-16-40	C15 ADDED
8-14-40	C5 AT V.C. ADDED

DIAG. Nº	PART Nº	DESCRIPTION		DIAG. Nº	PART Nº	DESCRIPTION		DIAG. Nº	PART Nº	DESCRIPTION
C1	22-1071	TWO-GANG VARIABLE		R3	63-576	68 OHM	⅛ W.	6	S 8881	OSCILLATOR COIL ASSEM.
C2	22-289	50 MMFD.	600 V.	R4	63-591	22 M OHM	¼ W.	7	95-760	1ST I.F. TRANSFORMER
C3	22-1098	.00083 MFD.	600 V.	R5	63-1093	15 MEGOHM	¼ W.	8	95-601	2ND I.F. TRANS. FILTER EXTERNAL
C4	22-829	.05 MFD.	200 V.	R6	63-1023	220 OHM WIREWOUND	½ W.		95-759	2ND I.F. TRANS. FILTER IN CAN
C5	22-162	.0001 MFD.	600 V.	R7	63-599	1.5 MEGOHM	¼ W.	9	85-257	TONE CONTROL SWITCH
C6	22-1017	.05 MFD.	200 V.	R8	63-593	47 M OHM	¼ W.	10	100-67	PILOT LIGHT 6.3 V. .15A.
C7	22-182	.00025 MFD.	600 V.	R9	63-1130	VOLUME CONTROL				
C8	22-492	.002 MFD.	600 V.	R10	63-976	15 MEGOHM	¼ W.			
C9	22-716	.0005 MFD.	600 V.	R11	63-296	220 M OHM	¼ W.	A		1ST I.F. TRANS. PRI.
C10	22-243	.01 MFD.	400 V.	R12	63-597	470 M OHM	¼ W.	B		1ST I.F. TRANS. SEC.
C11	22-1100	.06 MFD.	400 V.	R13	63-686	150 OHM WIREWOUND	½ W.	C		2ND I.F. TRANS. PRI.
C12		15 MFD. ELECTROLYTIC	150 V.					D		2ND I.F. TRANS. SEC.
C13	22-1075	30 MFD. ELECTROLYTIC	150 V.					E		WAVE TRAP (SEE NOTE)
C14		20 MFD. ELECTROLYTIC	25 V.					F		BROADCAST OSC. (SEE NOTE)
C15	22-1157	.03 MFD.	200 V.	1	S 8885	WAVEMAGNET ASSEM.		G		BROADCAST ANT. (SEE NOTE)
C16	22-1158	.05 MFD.	200 V.	2	S 8882	ANTENNA COIL ASSEM.		K		SHORT WAVE OSC. (ON GANG)
				3	85-248	BAND SELECTOR SW.		M		SHORT WAVE ANT. (SEE NOTE)
R1	63-587	4700 OHM	¼ W.	4	S 8359	CHOKE & RES. ASSEM.				NOTE: TRIMMERS E, F, G & M ARE MOUNTED ON STRIP #22-1072
				5	S 8326	WAVETRAP ASSEMBLY				

Models 6D512-6D512W-6D539

Chassis No. 6A16

COMPILED BY M. N. BEITMAN, SUPREME PUBLICATIONS

110V. A.C.-D.C.-BATTERY PACK
UNIVERSAL PORTABLE
I.F. FREQUENCY 455KC.
6 TUBE SUPERHETERODYNE
CHASSIS Nº 6A19
ZENITH RADIO CORPORATION
CHICAGO, ILL.

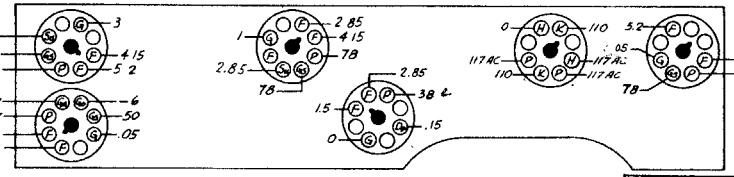

All voltages measured with a 20000 ohm per volt meter from Neg. B to socket contact indicated.

All voltages are positive D.C. unless marked otherwise.

Volume control on full.

Line voltage 117 v. A.C.

DIAG. Nº	PART Nº	DESCRIPTION		DIAG. Nº	PART Nº	DESCRIPTION		DIAG. Nº	PART Nº	DESCRIPTION
C1	22-1024	TWO GANG VARIABLE		R2	63-595	100 M OHM	½ W.	2	S8374	OSCILLATOR ASSEMBLY
C2	22-829	.05 MFD.	200 V.	R3	63-773	180 M OHM	¼ W.	3	S8326	WAVE TRAP ASSEMBLY
C3	22-162	.0001 MFD.	600 V.	R4	63-592	33 M OHM	¼ W.	4	95-739	1ST I.F. TRANSFORMER
C4	22-827	.1 MFD.	200 V.	R5	63-1097	870 OHM WIREWOUND	1 W.	5	95-740	2ND I.F. TRANSFORMER
C5	22-988	20 MMFD.	600 V.	R6	63-600	2.2 MEGOHM	¼ W.	6	85-224	CHANGEOVER SWITCH
C6	22-869	.05 MFD.	400 V.	R7	63-713	47 M OHM	¼ W.	7	85-225	WAVEMAGNET SWITCH
C7	22-492	.002 MFD	600 V.	R8	63-1121	VOLUME CONTROL				
C8	22-1026	20 MFD. ELECTROLYTIC	150 V.	R9	63-587	4700 OHM	¼ W.			
C9		40 MFD. ELECTROLYTIC	150 V.	R10	63-1096	140 OHM WIREWOUND	2 W.			
C10		20 MFD. ELECTROLYTIC	25 V.	R11	63-1132	2-SECTION CANDOHM		A		
C11	22-1159	40 MFD. ELECTROLYTIC	150 V.	R12	63-1156	1800 OHM	½ W	B		1ST I.F. TRANS. SEC.
C12		40 MFD. ELECTROLYTIC	25 V.	R13	63-1093	15 MEGOHM	¼ W.	C		2ND I.F. TRANS. PRI.
C13	22-196	.01 MFD.	600 V.	R14	63-722	2.2 MEGOHM	¼ W.	D		2ND I.F. TRANS. SEC.
C14	22-448	.004 MFD.	600 V.	R15	63-325	150 M OHM	¼ W.	E	22-1086	WAVE TRAP
C15	22-470	.00015 MFD.	600 V.	R16	63-271	1 MEGOHM	¼ W.	F		BROADCAST OSC. (ON GANG)
								G		BROADCAST ANT. (ON GANG)
R1	63-590	15 M OHM	¼ W.	1	S8984	WAVEMAGNET ASSEM.				

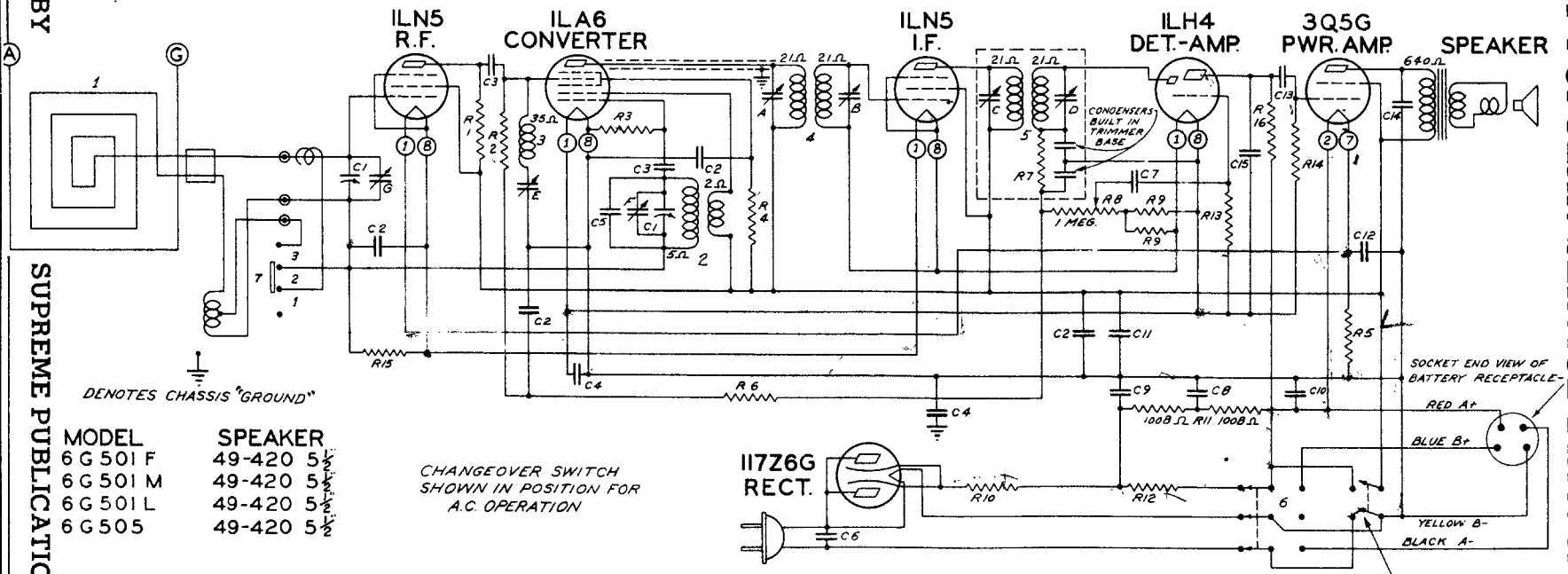

MODEL	SPEAKER
6G501F	49-420 5½"
6G501M	49-420 5½"
6G501L	49-420 5½"
6G505	49-420 5½"

8-13-40	F/L CKT. REVISED
8-15-40	MODEL NOS. CHANGED
8-20-40	22-1156 WAS 22-1069
8-29-40	22-1159 INCLUDES 22-1081 & 22-1156
	DIAG. C15 WAS C12
9-11-40	22-196 WAS 22-243

Models 6G501F-6G501L-6G501M

Chassis No. 6A19

COMPILED BY SUPREME PUBLICATIONS

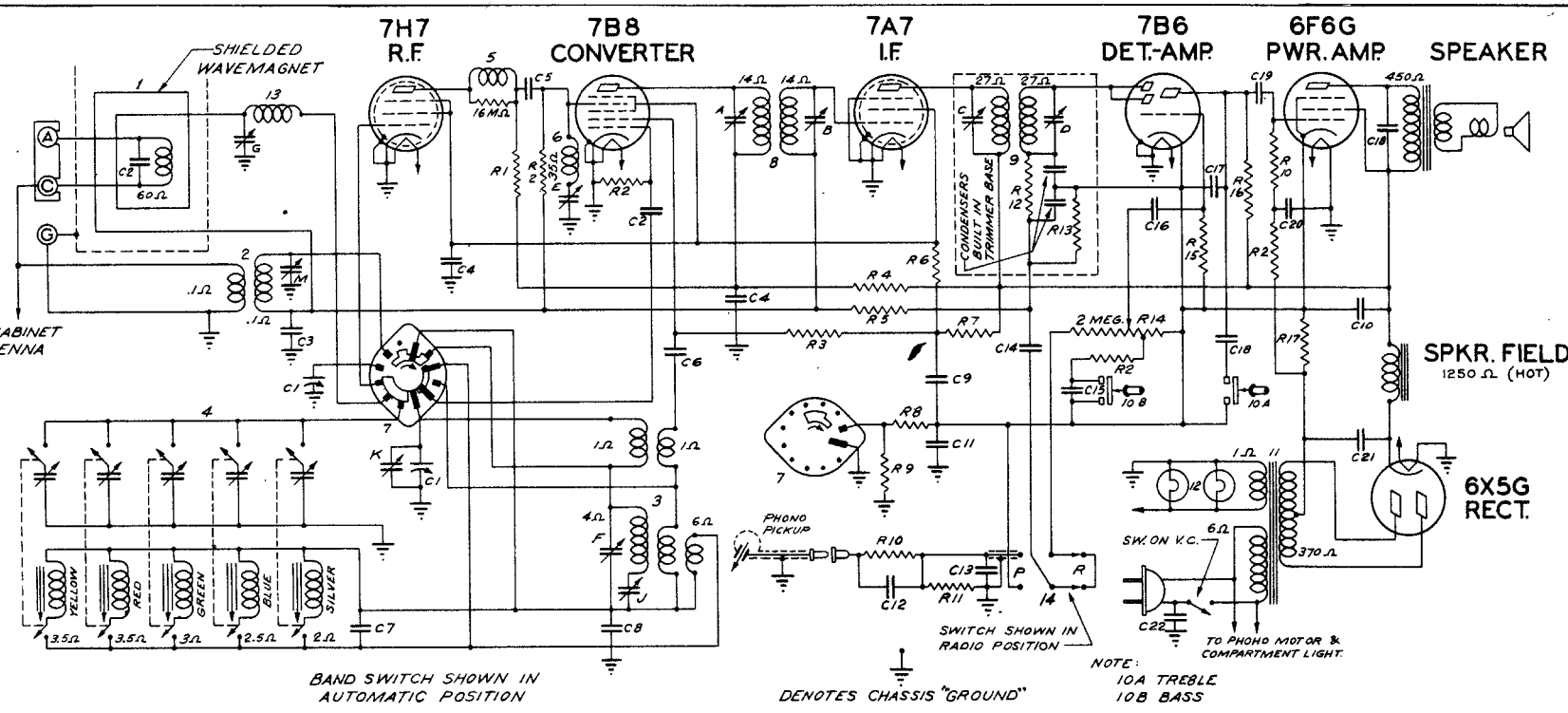

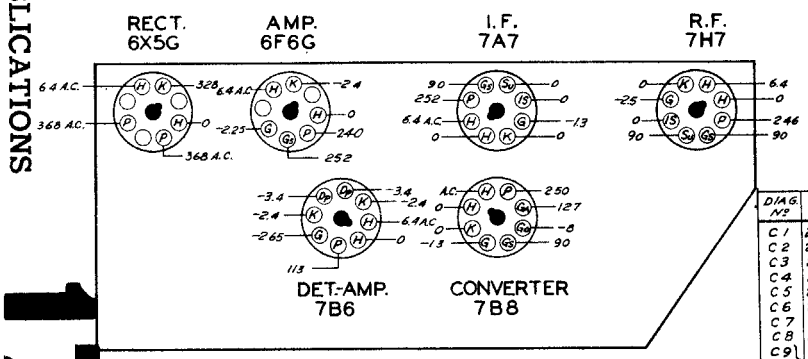

MODEL	SPEAKER
6 S 596	49-396 10"
6 S 597	49-380 10"

Circuit Diagram

Models 6S596-6S597

Chassis No. 6A20

DIAG. Nº	PART Nº	DESCRIPTION	
C 1	22-1044	TWO GANG VARIABLE	
C 2	22-289	50 MMFD.	600 V.
C 3	22-829	.05 MFD.	200 V.
C 4	22-828	.05 MFD	400 V.
C 5	22-162	.0001 MFD.	600 V.
C 6	22-182	.00025 MFD.	600 V.
C 7	22-868	COMPENSATING COND	
C 8	22-1022	.005 MFD.	600 V.
C 9	22-1034	8 MFD ELECTROLYTIC	450 V.
C 10		15 MFD. "	350 V.
C 11	22-827	.1 MFD.	200 V.
C 12	22-470	.00015 MFD.	600 V.
C 13	22-147	.0005 MFD.	600 V.
C 14	22-188	.02 MFD.	400 V.
C 15	22-229	.005 MFD.	600 V.
C 16	22-492	.002 MFD.	600 V.
C 17	22-854	.0005 MFD.	600 V.
C 18	22-448	.004 MFD.	600 V.
C 19	22-830	.02 MFD.	600 V.

DIAG. Nº	PART Nº	DESCRIPTION	
C 20	22-219	.03 MFD.	200 V.
C 21	22-1036	14 MFD. ELECTROLYTIC	450 V.
C 22	22-1041	.005 MFD.	600 V.
R 1	63-637	4700 OHM	¼ W.
R 2	63-593	47 M OHM	¼ W.
R 3	63-150	10 M OHM	½ W.
R 4	63-583	1000 OHM	¼ W.
R 5	63-599	1.5 MEGOHM	¼ W.
R 6	63-1102	15 M OHM	½ W.
R 7	63-1101	8200 OHM	2 W.
R 8	63-1098	42 OHM WIREWOUND	½ W.
R 9	63-624	68 OHM	¼ W.
R 10	63-597	470 M OHM	¼ W.
R 11	63-596	330 M OHM	¼ W.
R 12	63-713	47 M OHM	¼ W.
R 13	63-719	470 M OHM	¼ W.

DIAG. Nº	PART Nº	DESCRIPTION	
R 14	63-1123	VOLUME CONTROL	
R 15	63-976	15 MEGOHM	¼ W.
R 16	63-296	220 M OHM	¼ W.
R 17	63-1056	280 OHM WIREWOUND	1½ W.
1		WAVEMAGNET ASSEMBLY	
2	S8507	ANTENNA COIL ASSEMBLY	
3	S8508	OSCILLATOR COIL ASSEMBLY	
4	S8457	AUTOMATIC TUNING UNIT	
5	S8359	R.F. CHOKE & RES. ASSEMBLY	
6	S8326	WAVE TRAP ASSEMBLY	
7	85-255	BAND SELECTOR SWITCH	
8	95-708	1ST I.F. TRANSFORMER	
9	95-709	2ND I.F. TRANSFORMER	
10	S8531	TONE CONTROL SWITCH	
11	95-705	POWER TRANS. 50-60~ 117 V.	
12	100-36	PILOT LIGHT 6.3 V. .25 A.	

I.F. FREQUENCY 455 KC.
6 TUBE SUPERHETERODYNE
CHASSIS Nº 6A20 2 BAND A.C. PHONO
ZENITH RADIO CORPORATION
CHICAGO, ILL.

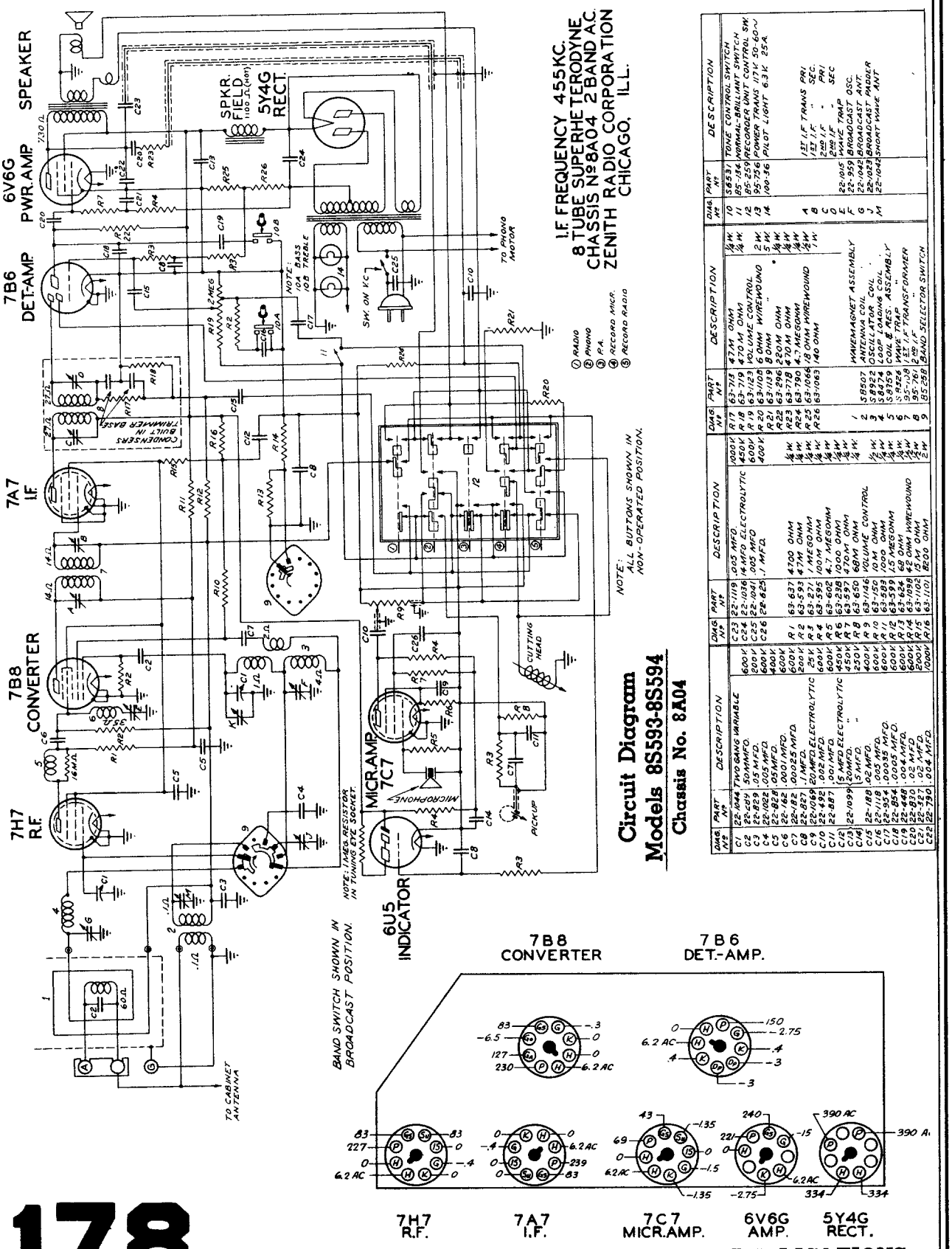

DIAG. Nº	PART Nº	DESCRIPTION		DIAG. Nº	PART Nº	DESCRIPTION		DIAG. Nº	PART Nº	DESCRIPTION		DIAG. Nº	PART Nº	DESCRIPTION
C1	22-1044	TWO GANG VARIABLE		C23	22-1119	.005 MFD.	1000V	R17	63-718	470M OHM	½W	10	S8531	TONE CONTROL SWITCH
C2	22-209	50MMFD.	600V	C24	22-1036	4 MFD ELECTROLYTIC	450V	R18	63-719	470 OHM	¼W	11	85-154	NORMAL-BRILLIANT SWITCH
C3	22-829	.05 MFD.	200V	C25	22-1041	.005 MFD	600V	R19	63-723	4 MEGOHM		12	85-259	RECORDER UNIT CONTROL SW.
C4	22-1022	.005 MFD.	600V	C26	22-825	.1 MFD.	400V	R20	63-1028	6 OHM WIREWOUND	2W	13	95-756	POWER TRANS 117V 50-60~
C5	22-828	.05MFD.	600V					R21	63-139	8 OHM "	5W	14	100-36	PILOT LIGHT 6.3V 25A.
C6	22-162	.0001 MFD.	600V	R1	63-637	4700 OHM	¼W	R22	63-296	220M OHM	¼W			
C7	22-182	.00025 MFD.	600V	R2	63-594	47M OHM	¼W	R23	63-718	470M OHM	¼W			
C8	22-827	.1 MFD.	25V	R3	63-271	1 MEGOHM	¼W	R24	63-790	4.7 MEGOHM	¼W			1ST I.F. TRANS PRI.
C9	22-1049	20 MFD ELECTROLYTIC	600V	R4	63-595	100M OHM	¼W	R25	63-1066	18 OHM WIREWOUND	½W	A		1ST I.F. " SEC.
C10	22-829	.05 MFD.	600V	R5	63-602	4.7 MEGOHM	¼W	R26	63-1063	140 OHM	1W	B		2ND I.F. " PRI
C11	22-827	.01 MFD.	600V	R6	63-238	1000 OHM	¼W					C		2ND I.F. " SEC
C12		5 MFD ELECTROLYTIC	450V	R7	63-597	470M OHM	¼W					D		
C13	22-1099	20MFD. "	450V	R8	63-650	68M OHM	¼W	1		WAVEMAGNET ASSEMBLY		E	22-1015	WAVE TRAP
C14		5 MFD. "	250V	R9	63-1146	VOLUME CONTROL		2	S8507	ANTENNA COIL		F	22-959	BROADCAST OSC.
C15	22-188	.02 MFD.	600V	R10	63-589	1M OHM	½W	3	S8922	OSCILLATOR COIL		G	22-1042	BROADCAST ANT.
C16	22-118	.005 MFD.	600V	R11	63-595	100M OHM	¼W	4	S8474	LOOP LOADING COIL		J	22-1023	BROADCAST PADDER
C17	22-354	.0005 MFD.	600V	R12	63-599	1.5 MEGOHM	¼W	5	S8359	COIL & RES. ASSEMBLY		M	22-1043	SHORT WAVE ANT
C18	22-848	.004 MFD.	600V	R13	63-624	68 OHM	¼W	6	S8326	WAVE TRAP				
C19	22-829	.05 MFD.	600V	R14	63-1098	42 OHM WIREWOUND	¼W	7	95-108	2ND I.F. TRANSFORMER				
C20	22-830	.02 MFD.	600V	R15	63-1102	15M OHM	¼W	8	95-561	2ND I.F. "				
C21	22-827	.02 MFD.	200V	R16	63-1101	8200 OHM	2W	9	85-258	BAND SELECTOR SWITCH				
C22	22-790	.004 MFD.	1000V											

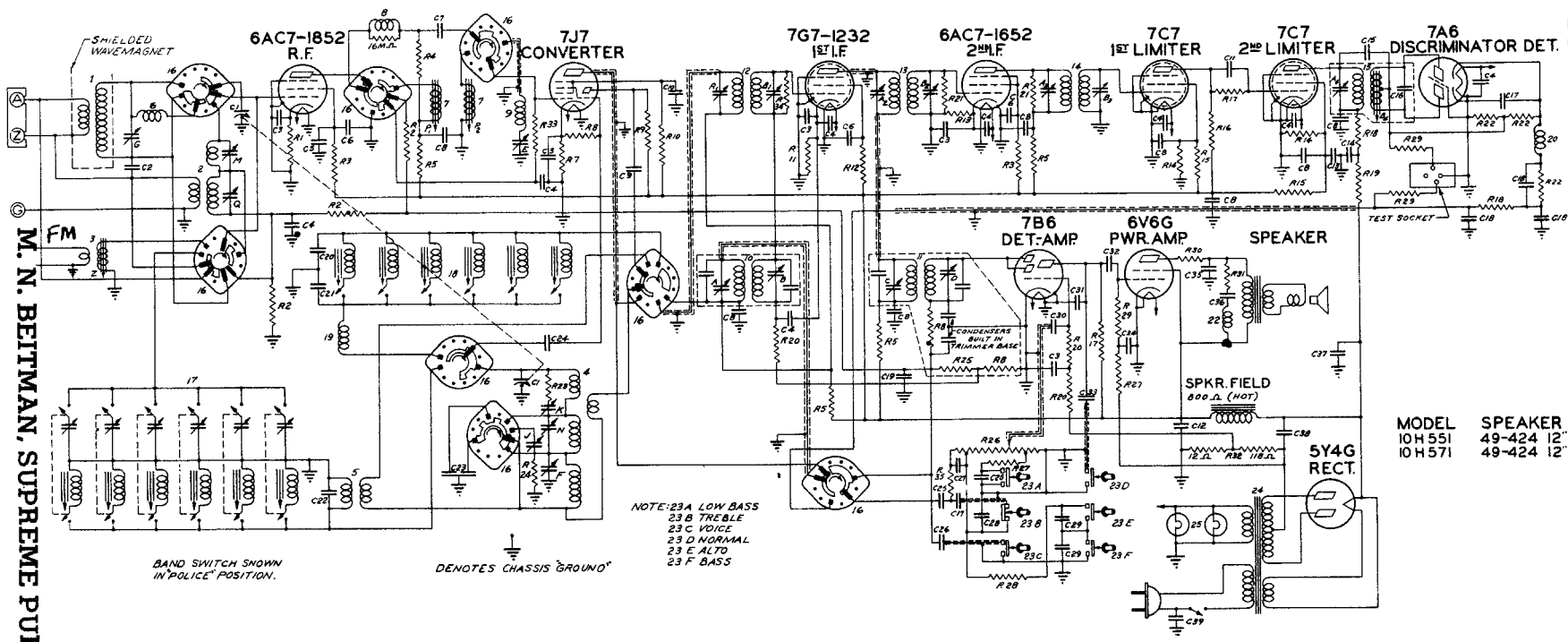

MODEL	SPEAKER
10H551	49-424 12"
10H571	49-424 12"

AMP. MOD. I.F. FREQUENCY 455KC.
FREQ. MOD. I.F. FREQUENCY 4.3MC.
10 TUBE SUPERHETERODYNE
CHASSIS № 10A3-A.C.-4 BAND
ZENITH RADIO CORPORATION
CHICAGO, ILL.

DIAG Nº	PART Nº	DESCRIPTION		DIAG Nº	PART Nº	DESCRIPTION		DIAG Nº	PART Nº	DESCRIPTION		DIAG Nº	PART Nº	DESCRIPTION		DIAG Nº	PART Nº	DESCRIPTION
C1	22-1121	TWO GANG VARIABLE		C30	22-188	.02 MFD.	400V	R17	63-296	220 M OHM	½W.	11	95-766	2ND I.F. TRANSFORMER (A.M.)		A_a		4TH I.F. TRANS. PRI. (F.M.)
C2	22-319	.005 MFD	200V.	C31	22-1136	.0002F MFD	600V	R18	63-589	100Ω OHM	½W.	12	95-767	1ST I.F. " (F.M.)		B_a		4TH I.F. " SEC (F.M.)
C3	22-827	.1 MFD.	200V	C32	22-830	.02 MFD	600V	R19	63-679	82 M OHM	1W.	13	95-768	2ND I.F. " (F.M.)		E	22-1015	WAVETRAP
C4	22-829	.05 MFD	200V	C33	22-448	.004 MFD	600V	R20	63-271	1 MEGOHM	½W.	14	95-769	3RD I.F. " (F.M.)		F		BROADCAST OSC. NOTE 1
C5	22-1123	5 MFD ELECTROLYTIC	300V	C34	22-219	.03 MFD.	200V	R21	63-652	120M OHM	½W.	15	95-772	4TH I.F. " (F.M.)		G	22-1042	BROADCAST ANTENNA
C6	22-243	.01 MFD.	400V	C35	22-1134	.002 MFD	1000V	R22	63-160	100 M OHM	½W.	16	85-234	BAND SELECTOR SWITCH		J	22-688	BROADCAST PADDER
C7	22-162	.0001 MFD	600V	C36	22-1128	.02 MFD	600V	R23	63-576	68 OHM	½W.	17		AUTOMATIC TUNING UNIT (BC)		K		SHORTWAVE OSC. NOTE 1
C8	22-825	.1 MFD.	400V.	C37	22-1129	.0005 MFD	1000V	R24	63-578	15 OHM	½W.	18		AUTOMATIC TUNING UNIT (FM)		M		SHORTWAVE ANT. NOTE 2
C9	22-358	.002 MFD.	600V.	C38	22-1124	30 MFD. ELECTROLYTIC	450V	R25	63-773	180 M OHM	½W.	19	59350	PEAKING COIL		N		POLICE BAND OSC. NOTE 1
C10	22-828	.05 MFD.	400V.	C39	22-1041	.002 MFD	600V	R26	63-1074	VOLUME CONTROL		20	58998	F.M. I.F. WAVETRAP		P		ULTRA HIGH FREQ. DET. (PLATE)
C11	22-127	25 MMFD	600V.					R27	63-593	47M OHM	½W.					P_2		ULTRA HIGH FREQ. DET. (GRID)
C12		15 MFD. ELECTROLYTIC	450V.					R28	63-594	68M OHM	½W.	22	20-230	SPEAKER COMP. FILTER		Q		POLICE BAND ANT. NOTE 2
C13	22-1125	5 MFD ELECTROLYTIC	300V.					R29	63-597	470 M OHM	½W.	23	58490	TONE CONTROL SW. ASSEM		Z		ULTRA HIGH FREQ. ANTENNA
C14		15 MFD ELECTROLYTIC	250V.	R1	63-741	150 OHM	½W.	R30	63-1158	100 OHM	½W.	24	95-771	POWER TRANS.	50-60 ~			
C15	22-956	.0005 MFD	600V.	R2	63-600	2.2 MEGOHM	½W.	R31	63-156	10 M OHM	1W.		95-773		25 ~			
C16	22-1143	25 MMFD	600V.	R3	63-1159	39M OHM	1W.	R32	63-1142	2 SECTION CANDOHM		25	100-36	PILOT LIGHT 6.3V. .25A				NOTE:
C17	22-289	50 M MFD	600V.	R4	63-1163	220 OHM	½W.	R33	63-715	100M OHM	½W.							(1) TRIMMERS F, K & N ARE MOUNTED ON STRIP № 22-850
C18	22-1138	.0005 MFD	600V.	R5	63-605	1000 OHM	½W.	R34	63-589	10M OHM	½W.							
C19	22-348	.001 MFD	600V.	R6	63-595	100 M OHM	½W.	R35	63-701	470 OHM	½W.							
C20	22-1146	50 MMFD. COMP.	600V.	R7	63-1164	300 OHM	½W.			WAVEMAGNET ASSEMBLY		A		1ST I.F. TRANS. PRI. (A.M.)				(2) TRIMMERS M & R ARE MOUNTED ON STRIP № 22-1045
C21	22-1139	50 MMFD. COMP.	600V	R8	63-713	47M OHM	½W.	1	59075	ANTENNA COIL " (S.W.)		B		1ST I.F. " SEC. (A.M.)				
C22	22-868	COMPENSATING COND.		R9	63-608	15M OHM	1W.	2	59065	ANTENNA COIL " (F.M.)		C		2ND I.F. " PRI. (A.M.)				
C23	22-1039	DUAL PADDER		R10	63-1160	56M OHM	1W.	3	59074	OSCILLATOR COIL "		D		2ND I.F. " SEC. (A.M.)				
C24	22-1140	50 MMFD	600V.	R11	63-1161	270 OHM	½W.	4	58466	OSCILLATOR COUPLING COIL		A_1		1ST I.F. " PRI. (F.M.)				
C25	22-1127	.02 MFD.	400V.	R12	63-1109	75M OHM	1W.	5	59044	LOOP LOADING COIL "		B_1		1ST I.F. " SEC. (F.M.)				
C26	22-1135	.005 MFD.	600V	R13	63-246	150 OHM	½W	6	59066	DETECTOR COIL ASSEM. (F.M.)		A_2		2ND I.F. " PRI. (F.M.)				
C27	22-1130	15 MMFD.	600V.	R14	63-607	15M OHM	½W	7	58859	COIL & RES. ASSEMBLY		B_2		2ND I.F. " SEC. (F.M.)				
C28	22-1137	.0005 MFD	600V	R15	63-168	33M OHM	1W	8	58326	WAVETRAP "		A_3		3RD I.F. " PRI. (F.M.)				
C29	22-1126	.01 MFD.	400V.	R16	63-961	47M OHM	1W.	9	95-765	1ST I.F. TRANSFORMER (A.M.)		B_3		3RD I.F. " SEC. (F.M.)				

Circuit Diagram

Models 10H551-10H571

Chassis No. 10A3

MANUAL OF 1941

Models 12S550Z-12S568E-12S568Z-12S569E-12S569Z-12S595Z

Chassis No. 12A1

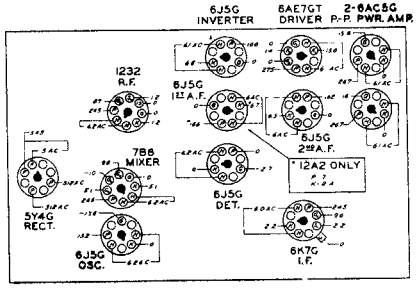

SOCKET VOLTAGES

DIAG. Nº	PART Nº	DESCRIPTION		DIAG. Nº	PART Nº	DESCRIPTION		DIAG. Nº	PART Nº	DESCRIPTION	DIAG. Nº	PART Nº	DESCRIPTION
C 1	22-951	THREE GANG VARIABLE						R22	63-584	1500 OHM ½ W.	B		1ST I.F. TRANS. SEC
C 2	22-889	.05 MFD.	200 V.								C		2ND I.F. TRANS. PRI.
C 3	22-825	.1 MFD.	400 V.								D		2ND I.F. TRANS. SEC
				R 1	63-627	180 OHM	½ W.	1		WAVEMAGNET ASSEMBLY	E	22-1015	WAVE TRAP
C 5	22-868	COMPENSATING CONDENSER		R 2	63-595	100M OHM	½ W.	2	SB142	LOOP LOADING COIL ASSEMBLY	F		BROADCAST OSC (NOTE 1)
C 6	22-853	DUAL OSCILLATOR PADDER		R 3	63-587	4700 OHM	½ W.	3	SB749	ANTENNA COIL ASSEMBLY	G	22-1042	BROADCAST ANTENNA
C 7	22-716	.0005 MFD.	600 V.	R 4	63-591	22M OHM	½ W.	4	SB751	DETECTOR COIL ASSEMBLY	H		BROADCAST DET. (NOTE 1)
C 8	22-828	.05 MFD.	400 V.	R 5	63-580	330 OHM	½ W.	5	SB750	OSCILLATOR COIL ASSEMBLY	J	22-688	BROADCAST PADDER
C 9	22-127	25 MMFD.	600 V.	R 6	63-701	470 OHM	½ W.	6	SB466	OSCILLATOR CPLG. COIL ASSEM.	K		SHORTWAVE OSC (NOTE 1)
C10	22-358	.002 MFD	600 V.	R 7	63-593	47M OHM	½ W.	7	SB389	R.F. COIL ASSEMBLY	L		SHORTWAVE DET (ON GANG)
C11	22-1053	16 MFD. ELECTROLYTIC	200 V.	R 8	63-621	39 OHM	½ W.	8	SB326	WAVE TRAP COIL ASSEMBLY	M		SHORTWAVE ANT (NOTE 2)
C12		16 MFD. ELECTROLYTIC	450 V.	R 9	63-1055	22 M OHM	1 W.	9		AUTOMATIC TUNING UNIT	N		POLICE OSC (NOTE 1)
C13	22-229	.005 MFD.	600 V.	R 10	63-676	27M OHM	1 W.	10	B5-235	BAND SELECTOR SWITCH	Q		POLICE ANT. (NOTE 2)
C14	22-959	.00035 MFD.	600 V.	R 11	63-271	1 MEGOHM	½ W.	11	95-637	1ST I.F. TRANSFORMER			NOTE:
C15	22-470	.00015 MFD.	600 V.	R 12	63-1058	22M OHM	2 W.	12	95-715	2ND I.F. TRANSFORMER			(1) TRIMMERS F, H, K & N ARE MOUNTED ON STRIP # 22-1052
C16	22-448	.004 MFD	600 V.	R 13	63-717	220 M OHM	½ W.	13	SB593	TONE CONTROL SW. ASSEMBLY			
C17	22-492	.002 MFD.	600 V.	R 14	63-711	22 M OHM	½ W.	14	95-714	PWR. TRANS. 60 ~ 117 V.			
C18	22-854	.0005 MFD	600 V.	R 15	63-439	2700 OHM	½ W.	15	100-36	PILOT LIGHT 6.3 V. .25 A.			(2) TRIMMERS M & Q ARE MOUNTED ON STRIP # 22-982.
C19	22-830	.02 MFD	600 V.	R 16	63-592	33M OHM	½ W.	16	B5-148	A.C. SWITCH			
C20	22-196	.01 MFD	600 V.	R 17	63-1078	VOLUME CONTROL							
C21	22-1016	.005 MFD.	1000 V.	R 18	63-594	68 M OHM	½ W.						
C22	22-1108	20 MFD. ELECTROLYTIC	450 V.	R 19	63-657	330 M OHM	½ W.						
C23		20 MFD. ELECTROLYTIC	450 V.	R 20	63-645	27M OHM	½ W.						
C24	22-992	.02 MFD	600 V.	R 21	63-1105	1000 OHM	2 W.	A		1ST I.F. TRANS. PRI.			

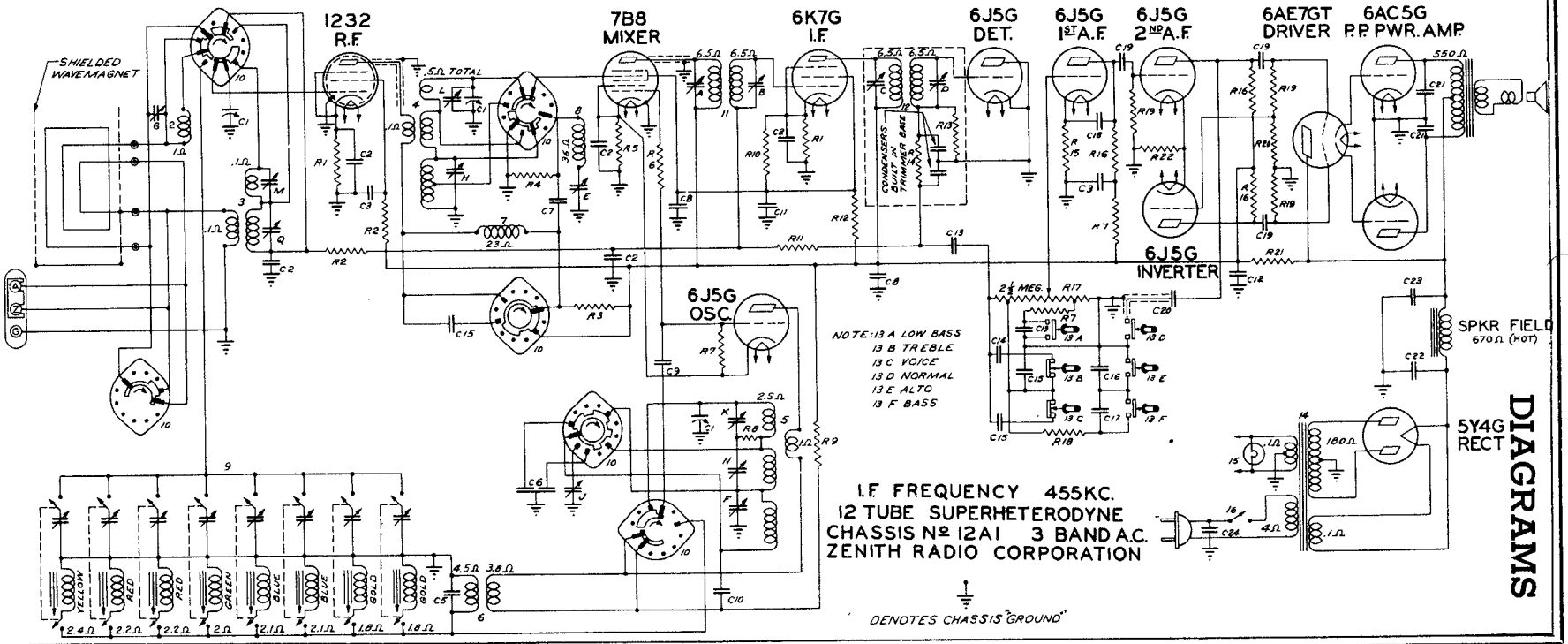

DIAGRAMS

COMPILED BY M. N. BEITMAN, SUPREME PUBLICATIONS

ZENITH RADIO CORPORATION

CHICAGO • ILLINOIS

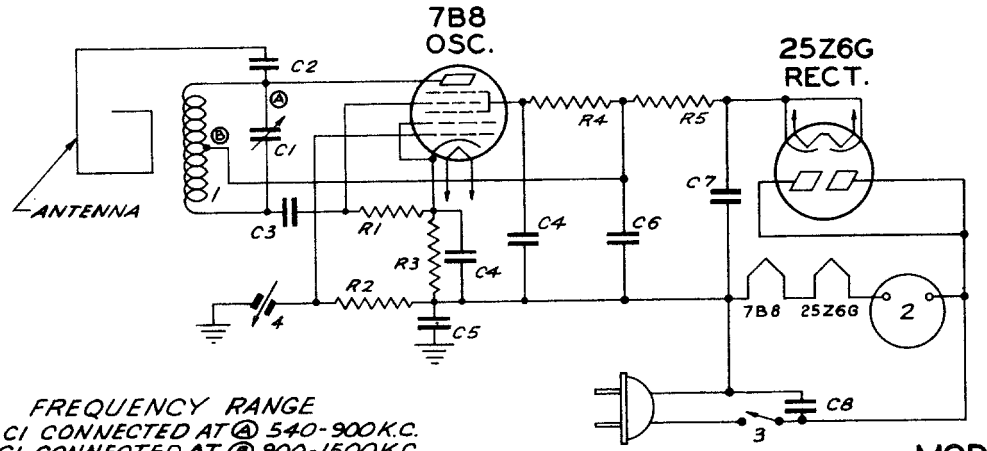

FREQUENCY RANGE
C1 CONNECTED AT Ⓐ 540-900K.C.
C1 CONNECTED AT Ⓑ 900-1500K.C.

MODELS
S8500Z

DIAG. Nº	PART Nº	DESCRIPTION		DIAG. Nº	PART Nº	DESCRIPTION	
C1	22-690	TUNING CONDENSER		R2	63-464	1 MEGOHM	¼W.
C2	22-127	25 MMFD.	600V.	R3	63-581	470 OHM	¼W.
C3	22-182	.00025 MFD.	600V.	R4	63-964	4700 OHM	½W.
C4	22-829	.05 MFD.	200V.	R5	63-707	4700 OHM	¼W.
C5	22-827	.1 MFD.	200V.				
C6	22-1061	8 MFD. ELECTROLYTIC	150V.				
C7		16 MFD. "	150V.	1	S8611	OSC. COIL ASSEM.	
C8	22-869	.05 MFD.	400V.	2	141-85	MOTOR (60~)	
				3	85-191	A.C. SWITCH	
				4	142-30	PICKUP	
R1	63-593	47M OHM	¼W.				

PHONOGRAPH OSCILLATOR
ZENITH RADIO CORPORATION
CHICAGO ILL.

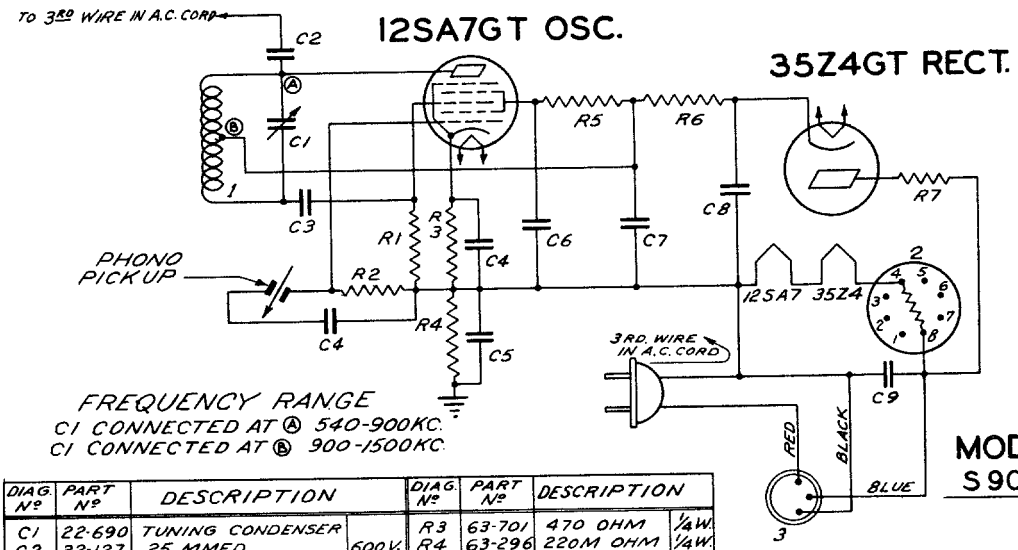

FREQUENCY RANGE
C1 CONNECTED AT Ⓐ 540-900KC.
C1 CONNECTED AT Ⓑ 900-1500KC.

MODEL
S9000

DIAG. Nº	PART Nº	DESCRIPTION		DIAG. Nº	PART Nº	DESCRIPTION	
C1	22-690	TUNING CONDENSER		R3	63-701	470 OHM	¼W.
C2	22-127	25 MMFD.	600V.	R4	63-296	220M OHM	¼W.
C3	22-182	.00025 MFD.	600V.	R5	63-964	4700 OHM	½W.
C4	22-829	.05 MFD.	200V.	R6	63-803	2200 OHM	½W.
C5	22-827	.1 MFD.	200V.	R7	63-575	47 OHM	¼W.
C6	22-243	.01 MFD.	400V.				
C7	22-876	8 MFD. ELECTROLYTIC	150V.				
C8		40 MFD. "	150V.	1	S8611	OSC. COIL ASSEM.	
C9	22-828	.05 MFD.	400V.	2	100-76	BALLAST TUBE	
				3	52-208	3 PRONG RECEPTACLE	
R1	63-591	22 M OHM	¼W.				
R2	63-271	1 MEGOHM	¼W.				

FREQUENCY MODULATION

Broadcasting by the Frequency Modulation method has already proved to be the most satisfactory means of "Local" radio transmission with reduced noise and high fidelity. It is not generally understood that these two features of FM are due in a great measure to the wide frequency band which this method of modulation employs. The FM receiver must be accurately aligned because much of the FM system's noise reducing ability is lost if the FM IF and discriminator circuits are misaligned.

The alignment of FM receivers differs from the familiar AM receiver alignment procedure where a modulated signal from the generator is used and the output is measured with an A.C. voltmeter across the voice coil.

The signal generator for FM alignment must be capable of supplying an unmodulated signal of at least .5 volt at the IF frequencies (4 to 9 Mc.) and a moderate unmodulated signal at the FM RF frequencies (41.5 to 50.5 Mc.) A 50-0-50 microammeter, such as Triplett #321 or #521, makes an excellent output meter when used with our #S9614 four prong plug and cable assembly and a S.P.D.T. switch. (see fig. 1)

The output meter is connected across HALF the diode load resistor for gain alignment and is connected across the FULL diode load resistor for frequency settings. A polarized socket is provided (near the 7A6 tube) which accommodates the output meter plug to facilitate switching the meter across either FULL or HALF the diode load resistor.

IMPORTANT—The FM IF and discriminator alignment must be followed in a stage-by-stage sequence, beginning at the discriminator and working forward to the converter stage. This differs from the conventional AM IF alignment procedure where the signal is applied to the converter grid and all the IFs are aligned simultaneously.

The signal from the generator must be kept just below the point where the limiter action of the receiver begins. To explain further we should consider the purpose of the limiter. It does what its name implies; it limits the amount of signal applied to the discriminator circuit. When the input signal is strong the limiter cuts off, allowing only a portion of the signal to pass, while at low signal levels the limiter acts as an IF amplifier. Therefore, it is easy to understand why the signal input to the receiver and IFs must be held below the limiter operating range during alignment. The most practical way of determining the proper amount of input signal is to watch the output meter (connected across HALF the diode load) while the signal from the generator is increased. The meter will indicate the increase in signal until limiting action begins, from which point on no appreciable increase can be noted on the meter even though the generator signal has been increased considerably. The desired signal input level (from the generator) is just below the limiting point which may be determined by increasing the generator output while watching the output meter, then reducing the generator output slightly when the limiting point is reached.

IF AND DISCRIMINATOR ALIGNMENT

Holes have been placed at the top of all the FM IF transformer shields so that a signal generator may be connected across the transformer secondaries to facilitate alignment. (see fig. 2) A vey high input signal will be necessary to get an output indication for the discriminator alignment. Should the generator be unable to supply sufficient signal, the Discriminator input stage may be aligned first in order that its gain may be utilized to raise the input signal to the discriminator.

1. Connect the output meter across the FULL discriminator load. (fig. 1)
2. Feed an unmodulated signal, at the IF frequency, through the dummy antenna (fig. 2) to the 3rd IF transformer secondary. (The IF frequency is stamped on the IF transformer shields.) Adjust the slug B4 for resonance. Rotating the slug B4 through the resonance point will cause the output meter to swing through zero from positive to negative or vice versa. A zero reading on the meter indicates the desired resonance point.
3. Switch the output meter to HALF discriminator load (fig. 1). Adjust trimmer A4 for maximum output, keeping the signal input below the point of limiting action.
4. (Meter at HALF load) Connect the generator to the 2nd IF transformer secondary and adjust the 3rd IF trimmers A3 and B3 for maximum output.
5. (Meter at HALF load) Connect the generator across the 1st IF transformer secondary and adjust the 2nd IF transformer trimmers A2 B2 for maximum output.
6. (Meter at HALF load) Connect the generator to the converter grid. A small socket is provided near the converter tube which will accommodate the side pin of the #S9615 Dummy Antenna assembly (Fig. 2) to facilitate this generator connection. Adjust the 1st IF transformer trimmers A1 B1 for maximum output.

FM OSCILLATOR AND RF ALIGNMENT

7a. (Meter at FULL load) Connect the generator, through a 100 ohm dummy antenna, to the FM antenna terminals. Set the generator at 50 Mc. and tune in the signal on the receiver. As the pointer passes the 50 Mc. calibration the output meter will swing from negative through zero to a positive reading or vice versa. The resonance point is again at the zero setting. Should the pointer be off calibration more than plus or minus .5 Mc., which is tolerable, the oscillator may be set by adjusting the two flexible green leads between the manual tuning oscillator coil and the band switch. If the pointer is below 50 Mc. it can be raised by bringing the two green leads together and in the same manner the pointer can be lowered by separating the leads.

7b. (Meter still at FULL load) Set the generator at 46 Mc. and check the dial calibration (zero on meter). 46 Mc. should be on scale unless the cam on the condenser shaft has been loosened. If the cam has to be adjusted to scale the oscillator at 46 Mc., the 50 Mc. oscillator adjustment must be repeated. The converter stage is aligned after the receiver has been adjusted to scale within the .5 Mc. limits.

8a. (Meter at FULL load) With generator connected to the FM antenna terminals through 100 ohm dummy, set the generator at 49 Mc. and tune in signal on receiver to get a zero output meter reading. Switch the meter to HALF load and adjust the generator to give an output just below the limiter action point. Adjust slug P1 for maximum output.

8b. (Meter at FULL load) Set generator at 46 Mc. and tune in on receiver. Switch meter to HALF load and adjust "Z" for maximum output.

8c. (Meter at FULL load) Set generator at 42.5 Mc. and tune in on receiver. Switch meter to HALF load and adjust P2 for maximum output.

There are no RF adjustments for the FM push buttons when the push buttons are used on automatic. Button #1 is checked at 50 Mc., buttons #2 and #3 checked at 49 Mc., buttons #5 and #6 checked at 42.5 Mc., and button #4 is the manual switch.

In conclusion we again wish to emphasize the importance of keeping the signal from the generator below the point where limiter action begins, that the output meter is connected across the FULL diode load resistor for frequency and calibration operations, and that the output meter is connected across HALF the diode load resistor for gain checks.

This information on alignment of Frequency Modulation circuits is presented with the permission of Zenith Radio Corp. of Chicago.

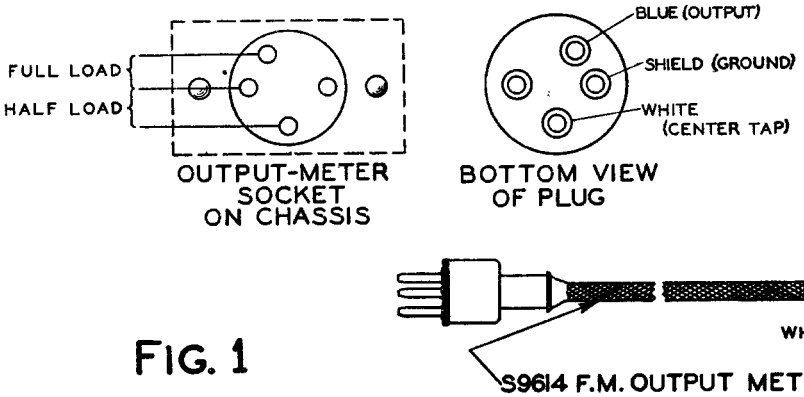

FIG. 1

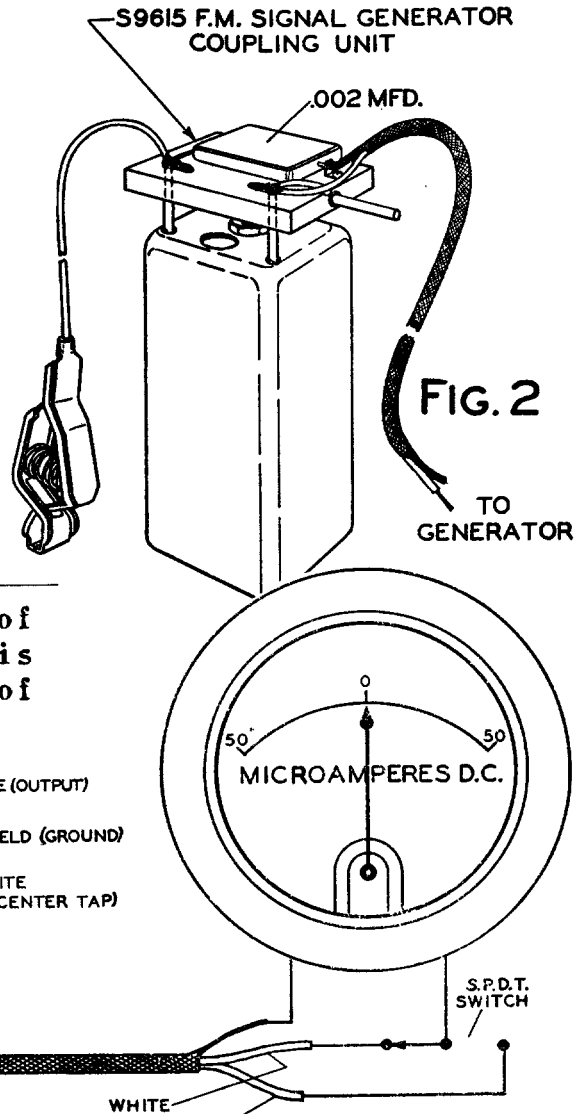

FIG. 2

MANUAL OF 1941 MOST POPULAR SERVICE DIAGRAMS

ALIGNMENT PROCEDURE

Operation	Connect Test Oscillator to	Dummy Antenna	Input Signal Frequency	Band	Set Dial At	Trimmers	Purpose
1	Converter Grid	.1 mfd.	455 Kc.	—	1600 Kc.	A, B, C, D	Align I. F.
2	1 Turn Loop Made from Generator Leads. Diameter Approx. 10"	—	1600 Kc.	—	1600 Kc.	F	Set Oscillator to Scale
3		—	600 Kc.	—	600 Kc.	J	Rock Gang and Adjust for Max.
4		—	1400 Kc.	—	1400 Kc.	G	Align Antenna

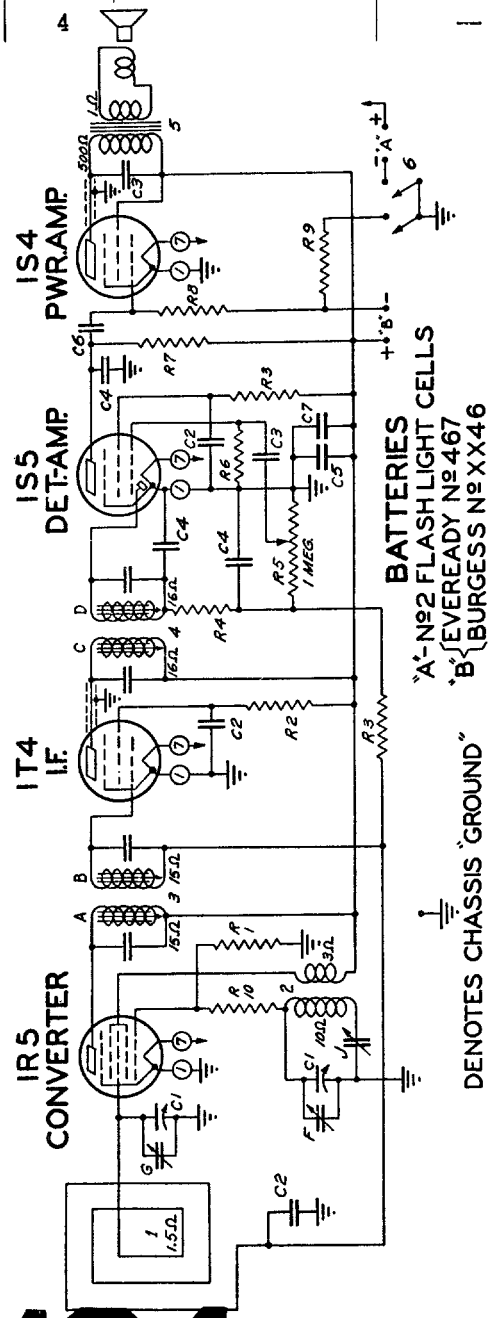

Circuit Diagram
Model 4K600
Chassis No. 4B01

1-29-41	R10 ADDED										
DIAG. Nº	PART Nº	DESCRIPTION		DIAG. Nº	PART Nº	DESCRIPTION		DIAG. Nº	PART Nº	DESCRIPTION
C1	22-1167	TWO GANG VARIABLE		R3	63-724	4.7 MEGOHM	¼W.	4	95-781	2ND I.F. TRANS.
C2	22-1174	.01 MFD.	125V.	R4	63-713	47M OHM	¼W.	5	95-779	SPKR. TRANS.
C3	22-1169	.001 MFD.	600V.	R5	63-1176	VOLUME CONTROL	¼W.	6	85-267	PWR. SWITCH
C4	22-1162	.0001 MFD.	600V.	R6	63-1093	15 MEGOHM	¼W.			
C5	22-1176	5 MFD. ELECTROLYTIC	6V.	R7	63-464	1 MEGOHM	¼W.			
C5	22-1175	.005 MFD.	600V.	R8	63-723	3.3 MEGOHM	¼W.	A		1ST I.F.T. PRI.
C7	22-1188	.05 MFD.	200V.	R9	63-749	680 OHM	¼W.	B		1ST I.F.T. SEC.
				R10	63-1234	680 OHM	¼W.	C		2ND I.F.T. PRI.
								D		2ND I.F.T. SEC.
R1	63-715	100 M OHM	¼W.	1	S9385	WAVEMAGNET ASSEMBLY		F		BDCAST OSCILLATOR
R2	63-765	33M OHM	¼W.	2	S9354	OSC. COIL ASSEMBLY		G		BDCAST ANTENNA
				3	95-780	1ST I.F. TRANS.		J	22-1166	BDCAST PADDER

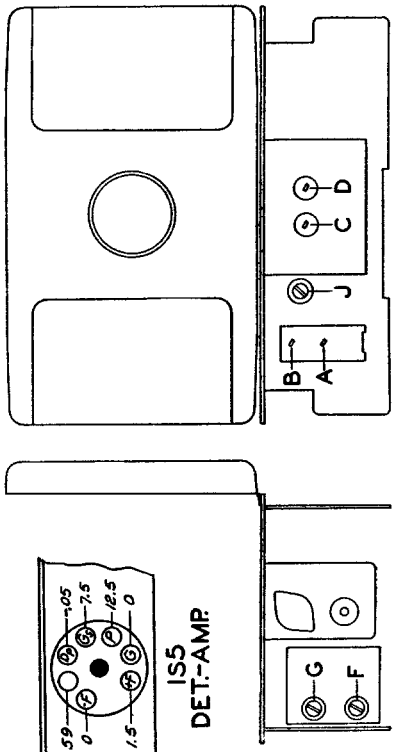

TRIMMER LOCATIONS

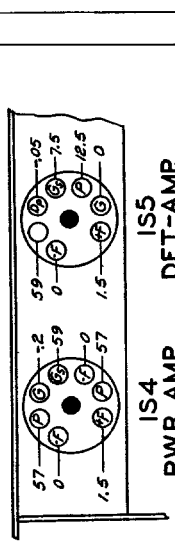

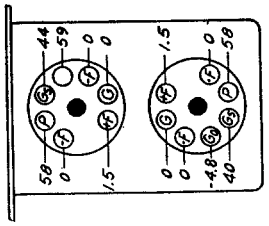

COMPILED BY M. N. BEITMAN, SUPREME PUBLICATIONS

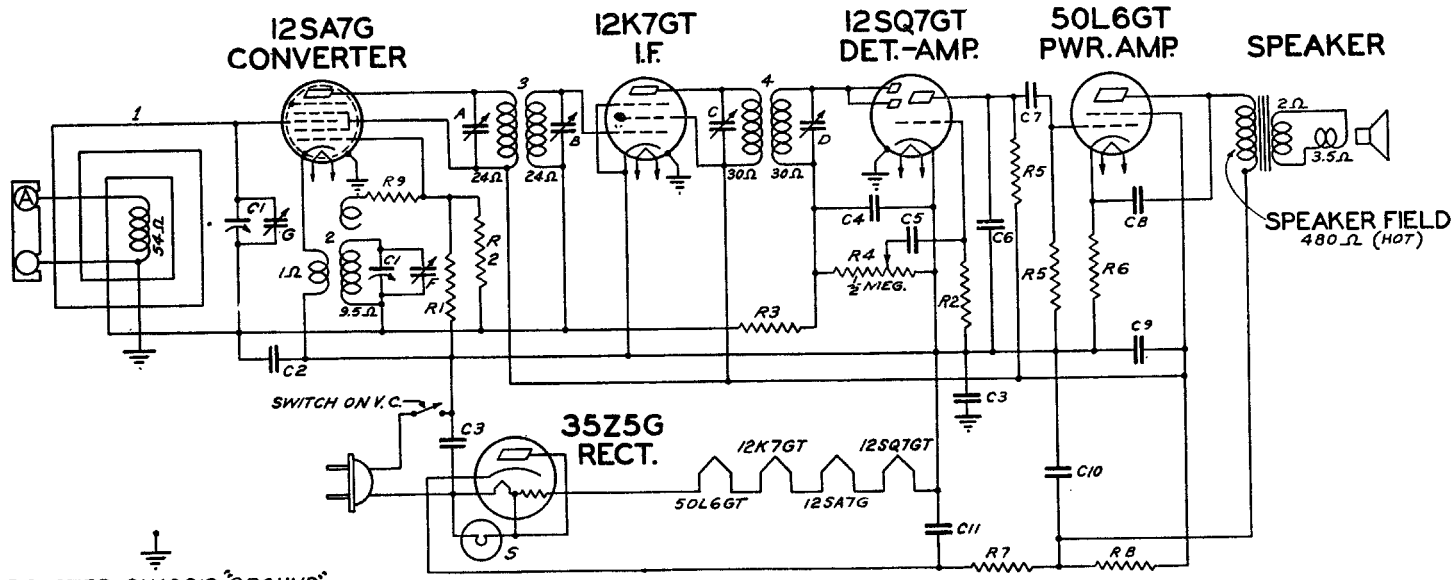

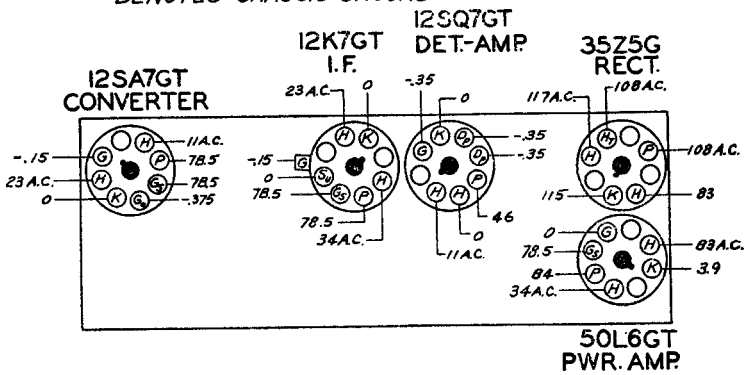

ALIGNMENT PROCEDURE

Operation	Connect Test Oscillator to	Dummy Antenna	Input Signal Frequency	Band	Set Dial At
1	Converter Grid	.1 mfd.	455 Kc.	—	600 Kc.
2	1 Turn Loop Made from Generator Leads.	—	1500 Kc.	—	1500 Kc.
3			1500 Kc.	—	1500 Kc.

ZENITH RADIO CORPORATION
CHICAGO, ILL.

Circuit Diagram

Models 5D610, 5D610W, 5D625

Chassis No. 5B01

1-8-41 R9 ADDED

DIAG. Nº	PART Nº	DESCRIPTION		DIAG. Nº	PART Nº	DESCRIPTION		DIAG. Nº	PART Nº	DESCRIPTION
C1	22-1185	TWO-GANG VARIABLE		R1	63-589	10 M OHM	1/4 W.	2	S9450	OSC. COIL ASSEMBLY
C2	22-829	.05 MFD.	200 V.	R2	63-976	15 MEGOHM	1/4 W.	3	95-696	1ST I.F. TRANS.
C3	22-1017	.05 MFD.	200 V.	R3	63-600	2.2 MEGOHM	1/4 W.	4	95-794	2ND I.F. TRANS.
C4	22-953	.0002 MFD.	600 V.	R4	63-112	VOLUME CONTROL		5	100-67	PILOT LIGHT 6.3V. .15A.
C5	22-492	.002 MFD.	600 V.	R5	63-597	470 M OHM	1/4 W.			
C6	22-854	.0005 MFD.	600 V.	R6	63-171	75 OHM WIREWOUND	1/2 W.	A		1ST I.F. TRANS. PRI.
C7	22-243	.01 MFD.	400 V.	R7	63-172	100 OHM WIREWOUND	1/2 W.	B		1ST I.F. TRANS. SEC.
C8	22-1182	.01 MFD.	400 V.	R8	63-173	1500 OHM	1 W.	C		2ND I.F. TRANS. PRI.
C9	22-1186	20 MFD. ELECTROLYTIC	150 V.	R9	63-579	220 OHM	1/4 W.	D		2ND I.F. TRANS. SEC.
C10		20 MFD. ELECTROLYTIC	150 V.					F		BROADCAST OSC. (ON GANG)
C11		30 MFD. ELECTROLYTIC	150 V.					G		BROADCAST ANT. (ON GANG)
					59452	WAVEMAGNET ASSEMBLY				

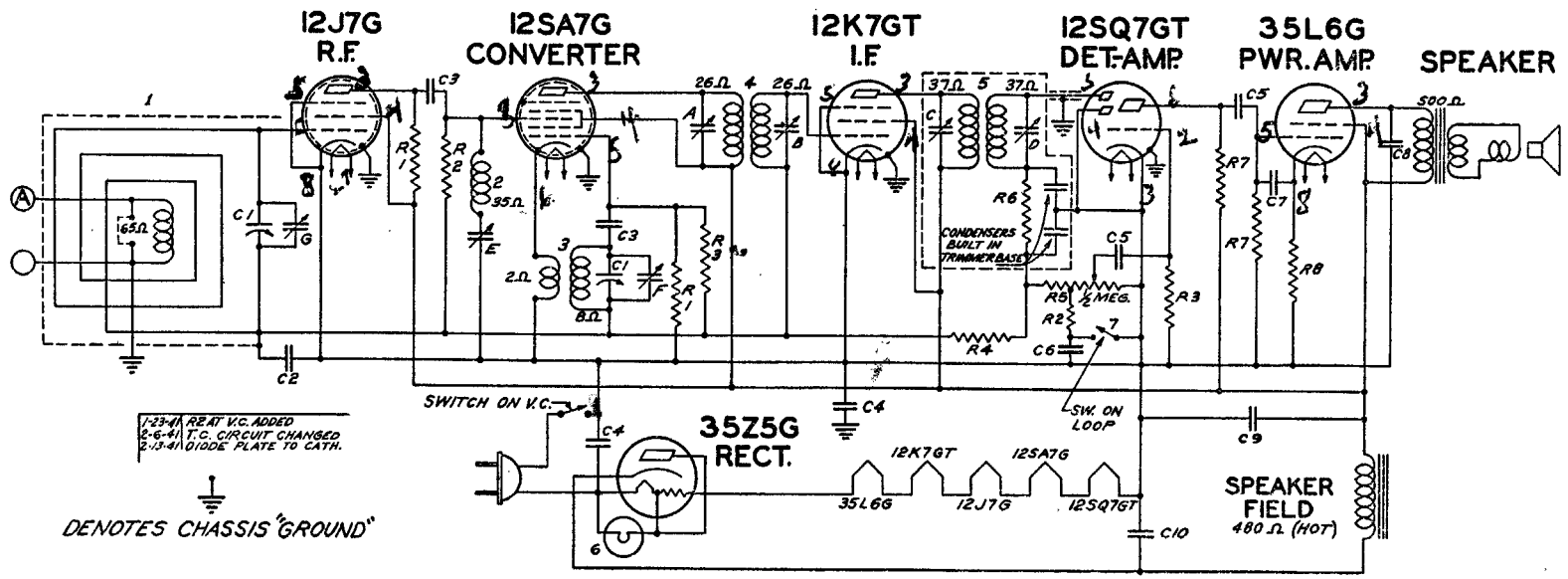

I.F. FREQUENCY 455 KC.

Circuit Diagram
Models 6D520, 6D520W, 6D538
Chassis No. 6A26

Operation	Connect Test Oscillator to	Dummy Antenna	Input Signal Frequency	Band	Set Dial At	Trimmers	Purpose
1	Converter Grid	.5 mfd.	455 Kc.	BC	600 Kc.	A, B, C, D	Align I. F.
2	R. F. Grid	.5 mfd.	455 Kc.	BC	600 Kc.	E	Adj. Wave Trap for Minimum
3	1 Turn Loop Made from Generator Leads.	——	1600 Kc.	BC	1600 Kc.	F	Set Oscillator to Scale
4		——	1400 Kc.	BC	1400 Kc.	G	Align Antenna

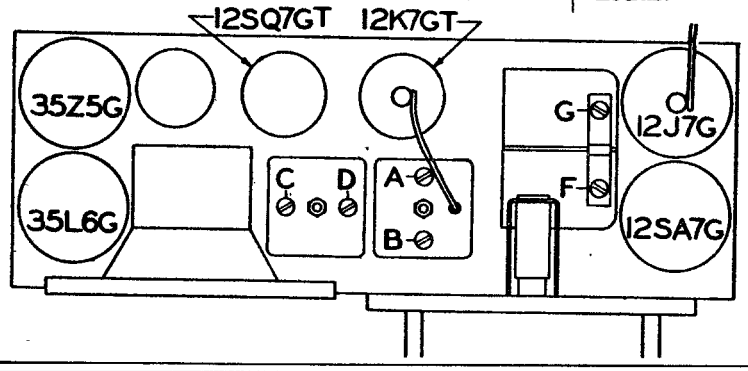

DIAG. Nº	PART Nº	DESCRIPTION		DIAG. Nº	PART Nº	DESCRIPTION		DIAG. Nº	DESCRIPTION
C1	22-1006	TWO-GANG VARIABLE		R2	63-591	22 M OHM	¼ W.	4	1ST I.F. TRANS.
C2	22-829	.05 MFD.	200 V.	R3	63-1093	15 MEGOHM	¼ W.	5	2ND I.F. TRANS.
C3	22-162	.0001 MFD.	600 V.	R4	63-600	2.2 MEGOHM	¼ W.	6	PILOT LIGHT 6.3 V. .15 A.
C4	22-1017	.05 MFD.	200 V.	R5	63-1149	VOLUME CONTROL		7	TONE CONTROL SWITCH
C5	22-243	.01 MFD.	400 V.	R6	63-713	47 M OHM	¼ W.		
C6	22-826	.01 MFD.	200 V.	R7	63-597	470 M OHM	¼ W.		
C7	22-854	.0005 MFD.	600 V.	R8	63-686	150 OHM WIREWOUND	½ W.	A	1ST I.F. TRANS. PRI.
C8	22-1182	.01 MFD.	400 V.					B	1ST I.F. TRANS. SEC.
C9	22-1014	20 MFD. ELECTROLYTIC	150 V.					C	2ND I.F. TRANS. PRI.
C10		20 MFD. ELECTROLYTIC	150 V.					D	2ND I.F. TRANS. SEC.
				1	S8356	WAVEMAGNET ASSEMBLY		E	WAVE TRAP
				2	S8326	WAVE TRAP COIL ASSEMBLY		F	BROADCAST OSC. (ON GANG)
R1	63-589	10 M OHM	¼ W.	3	S8336	OSC. COIL ASSEMBLY		G	BROADCAST ANT. (ON GANG)

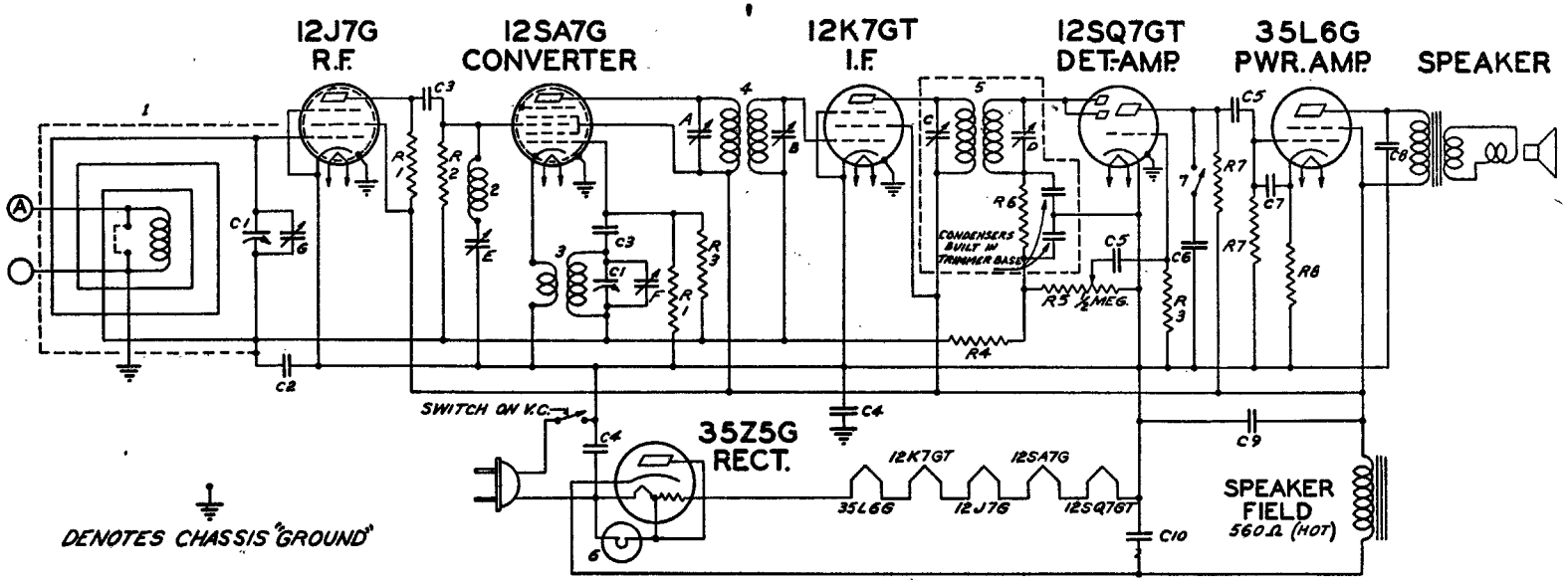

All voltages measured with a 20,000 ohm per volt meter from chassis to socket contact indicated.

All voltages are positive D.C. unless marked otherwise.

Volume control full on.

Line voltage 117 A.C.

Power consumption 25.5 watts.

Power output 1. watt.

Tuning Ranges 540 Kc. to 1600 Kc.

DIAG. Nº	PART Nº	DESCRIPTION		DIAG. Nº	PART Nº	DESCRIPTION		DIAG. Nº	PART Nº	DESCRIPTION
C1	22-1184	TWO-GANG VARIABLE		R2	63-591	22 M OHM	¼ W.	4	95-760	1ST I.F. TRANS.
C2	22-829	.05 MFD.	200V.	R3	63-976	15 MEGOHM	¼ W.	5	95-790	2ND I.F. TRANS.
C3	22-162	.0001 MFD.	600V.	R4	63-600	2.2 MEGOHM	¼ W.	6	100-67	PILOT LIGHT 6.3V. .15A.
C4	22-1017	.05 MFD.	200V.	R5	63-1130	VOLUME CONTROL		7	85-270	TONE CONTROL SWITCH
C5	22-243	.01 MFD.	400V.	R6	63-713	47 M OHM	¼ W.			
C6	22-492	.002 MFD.	600V.	R7	63-597	470 M OHM	¼ W.			
C7	22-854	.0005 MFD.	600V.	R8	63-686	1600 OHM WIREWOUND	½ W.	A		1ST I.F. TRANS. PRI.
C9	22-1049	.03 MFD.	400V.					B		1ST I.F. TRANS. SEC.
C9	22-1014	20 MFD. ELECTROLYTIC	150V.					C		2ND I.F. TRANS. PRI.
C10		20 MFD. ELECTROLYTIC	150V.					D		2ND I.F. TRANS. SEC.
				1	S9465	WAVEMAGNET ASSEMBLY		E	22-1015	WAVE TRAP
				2	S8326	WAVE TRAP COIL ASSEMBLY		F		BROADCAST OSC. (ON GANG)
R1	63-589	10M OHM	¼ W.	3	S9437	OSC. COIL ASSEMBLY		G		BROADCAST ANT. (ON GANG)

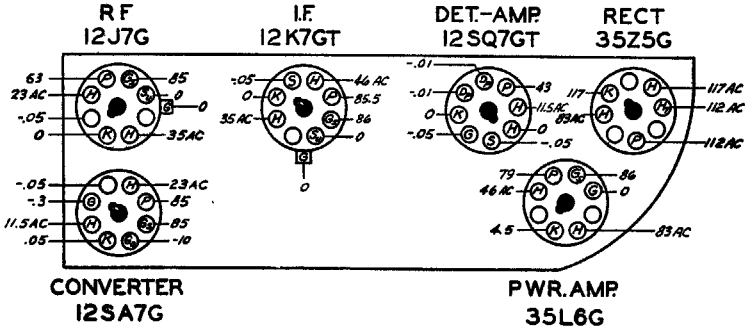

I.F. FREQUENCY 455 KC.
6 TUBE SUPERHETERODYNE
CHASSIS Nº 6A24 A.C.-D.C.
ZENITH RADIO CORPORATION
CHICAGO, ILL.

Circuit Diagram
Model 6D516
Chassis No. 6A24

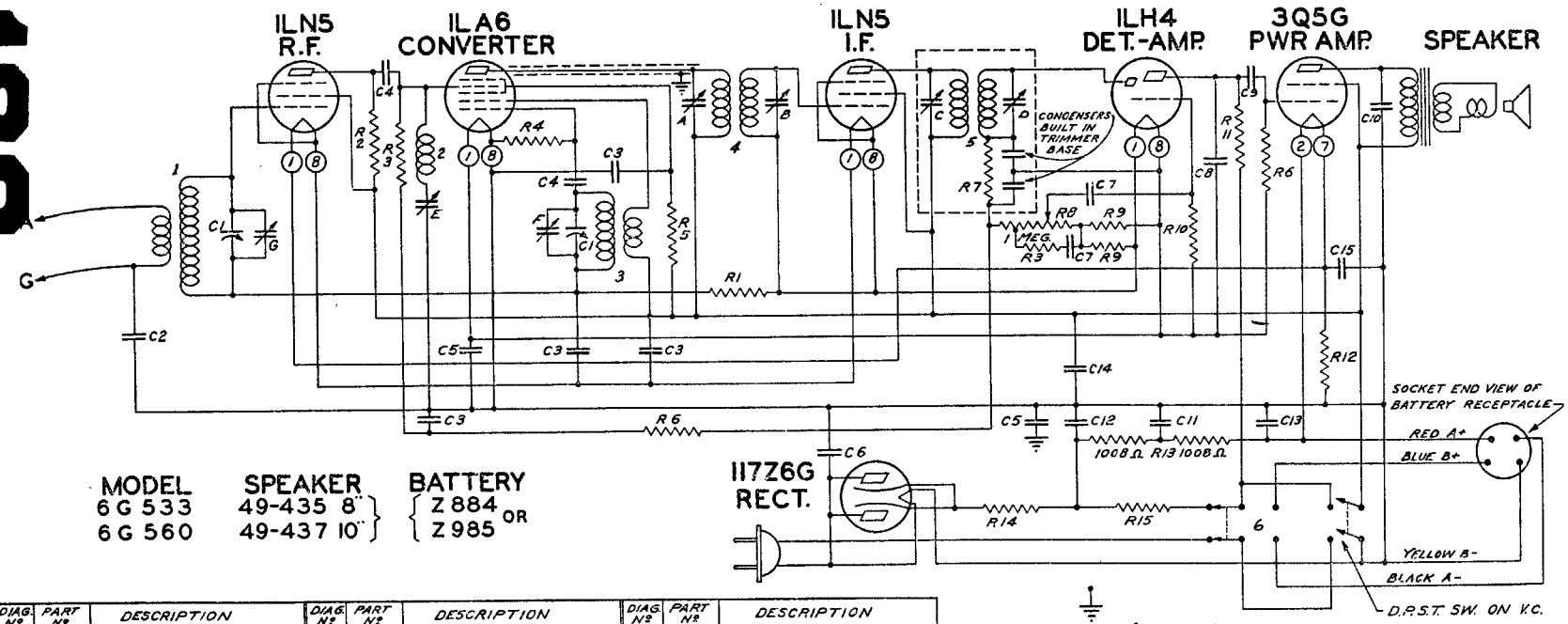

MODEL	SPEAKER	BATTERY
6G533	49-435 8"	Z884 OR
6G560	49-437 10"	Z985

DENOTES CHASSIS "GROUND"

CHANGEOVER SWITCH SHOWN IN POSITION FOR 115 V. A.C.-D.C. OPERATION.

DIAG. Nº	PART Nº	DESCRIPTION		DIAG. Nº	PART Nº	DESCRIPTION		DIAG. Nº	PART Nº	DESCRIPTION
C1	22-1181	TWO GANG VARIABLE		R1	63-325	150 M OHM	¼ W.	1	20-227	ANTENNA COIL
C2	22-1183	.01 MFD.	400 V.	R2	63-590	15 M OHM	¼ W.	2	S 8326	WAVE TRAP COIL ASSEMBLY
C3	22-829	.05 MFD.	200 V.	R3	63-595	100 M OHM	¼ W.	3	S 9446	OSCILLATOR COIL ASSEMBLY
C4	22-162	100 MMFD.	600 V.	R4	63-654	180 M OHM	¼ W.	4	95-792	1ST I.F. TRANSFORMER
C5	22-827	.1 MFD.	200 V.	R5	63-592	33 M OHM	¼ W.	5	95-793	2ND I.F. TRANSFORMER
C6	22-1017	.05 MFD.	200 V.	R6	63-600	2.2 MEGOHM	¼ W.	6	85-171	CHANGEOVER SWITCH
C7	22-492	.002 MFD.	600 V.	R7	63-713	47 M OHM	¼ W.			
C8	22-470	.00015 MFD.	600 V.	R8	63-1178	VOLUME CONTROL				
C9	22-196	.01 MFD.	600 V.	R9	63-555	2200 OHM	¼ W.			
C10	22-448	.004 MFD.	600 V.	R10	63-976	15 MEGOHM	¼ W.	A		1ST I.F. TRANS. PRI.
C11	22-1026	20 MFD. ELECTROLYTIC	150 V.	R11	63-271	1 MEGOHM	¼ W.	B		1ST I.F. TRANS. SEC.
C12		40 MFD. ELECTROLYTIC	150 V.	R12	63-1097	870 OHM WIREWOUND	1 W.	C		2ND I.F. TRANS. PRI.
C13		20 MFD. ELECTROLYTIC	25 V.	R13	63-1132	2-SECTION CANO OHM		D		2ND I.F. TRANS. SEC.
C14	22-1159	40 MFD. ELECTROLYTIC	150 V.	R14	63-1096	140 OHM WIREWOUND	2 W.	E	22-1015	WAVE TRAP
C15		40 MFD. ELECTROLYTIC	25 V.	R15	63-1156	1800 OHM	½ W.	F		BROADCAST OSC. (ON GANG)
								G		BROADCAST ANT. (ON GANG)

Model 6G533 - 6G560

Chassis No. 6A25

I.F. FREQUENCY 455 KC.
6 TUBE SUPERHETERODYNE
CHASSIS Nº 6A25
110 VOLT A.C.-D.C.-BATTERY PACK
ZENITH RADIO CORPORATION
CHICAGO, ILL.

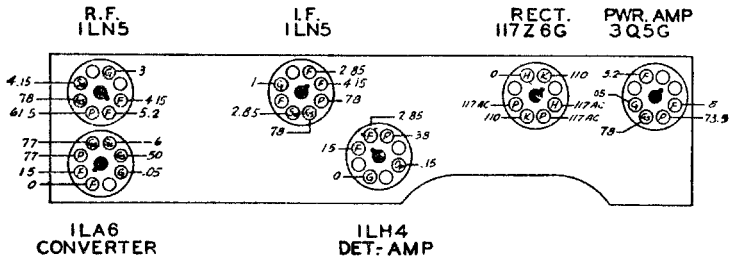

All voltages measured with a 20,000 ohm per volt meter from chassis to socket contact indicated.

All voltages are positive D.C. unless marked otherwise.

Volume control full on.

Line voltage 117 A.C.

Power consumption 20 watts.

Power output .360 watts.

Tuning Ranges 540 Kc. to 1620 Kc.

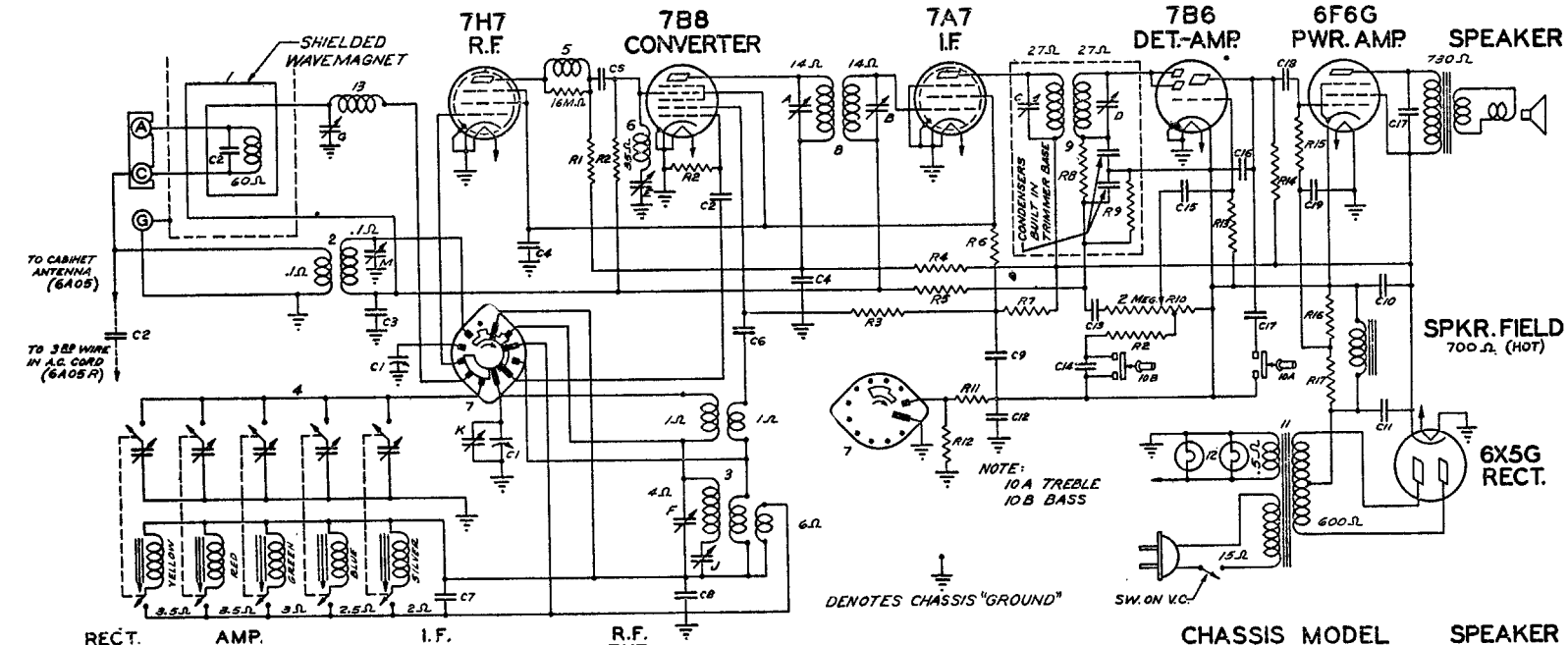

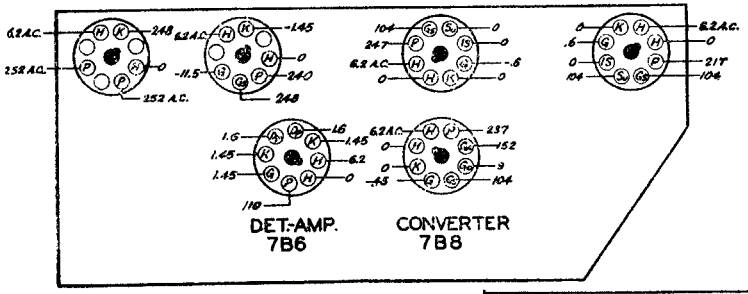

BAND SWITCH SHOWN IN AUTOMATIC POSITION

CHASSIS	MODEL	SPEAKER
6A05	6S546	49-388 6"
6A05	6S556	49-390 10"
6A05R	6S532	49-438 6"

I.F. FREQUENCY 455 KC.
6 TUBE SUPERHETERODYNE
CHASSIS Nº 6A05 & 6A05R 2 BAND A.C.
ZENITH RADIO CORPORATION
CHICAGO, ILL.

DIAG. Nº	PART Nº	DESCRIPTION	
C1	22-1044	TWO GANG VARIABLE	
C2	22-289	50 MMFD.	600 V.
C3	22-829	.05 MFD.	200 V.
C4	22-828	.05 MFD.	400 V.
C5	22-162	.0001 MFD.	600 V.
C6	22-182	.00025 MFD.	600 V.
C7	22-868	COMPENSATING COND.	
C8	22-1022	.005 MFD.	600 V.
C9	22-1034	5 MFD. ELECTROLYTIC	450 V.
C10		15 MFD. "	350 V.
C11	22-1036	14 MFD. "	450 V.
C12	22-827	.1 MFD.	200 V.
C13	22-188	.02 MFD.	400 V.
C14	22-289	.005 MFD.	600 V.
C15	22-492	.002 MFD.	600 V.
C16	22-854	.0005 MFD.	600 V.
C17	22-448	.004 MFD.	600 V.
C18	22-830	.02 MFD.	600 V.

DIAG. Nº	PART Nº	DESCRIPTION	
C19	22-138	.2 MFD. 6A05	200 V.
	22-827	.1 MFD. 6A05R	200 V.
R1	63-637	4700 OHM	½ W.
R2	63-593	47 M OHM	½ W.
R3	63-150	10 M OHM	½ W.
R4	63-583	1000 OHM	½ W.
R5	63-599	1.5 MEGOHM	½ W.
R6	63-1102	15 M OHM	½ W.
R7	63-1101	8200 OHM	2 W.
R8	63-713	47 M OHM	¼ W.
R9	63-719	470 M OHM	¼ W.
R10	63-1123	VOLUME CONTROL	
R11	63-1098	42 OHM WIREWOUND	½ W.
R12	63-624	68 OHM	½ W.
R13	63-976	15 MEGOHM	¼ W.
R14	63-296	220 M OHM	¼ W.

DIAG. Nº	PART Nº	DESCRIPTION	
R15	63-597	470 M OHM	¼ W.
R16	63-654	180 M OHM	¼ W.
R17	63-656	270 M OHM	¼ W.
1		WAVEMAGNET ASSEMBLY	
2	S8507	ANTENNA COIL ASSEMBLY	
3	S8508	OSCILLATOR COIL ASSEMBLY	
4		AUTOMATIC TUNING UNIT	
5	S8359	R.F. CHOKE & RES. ASSEMBLY	
6	S8326	WAVE TRAP ASSEMBLY	
7	85-733	BAND SELECTOR SWITCH	
8	95-708	1ST I.F. TRANSFORMER	
9	95-709	2ND I.F. TRANSFORMER	
10	S8531	TONE CONTROL SWITCH	
11	95-710	POWER TRANS. 50-60 ~ 117 V.	
12	100-36	PILOT LIGHT 6.3 V. .25 A.	

DIAG. Nº	PART Nº	DESCRIPTION
13	S8474	LOOP LOADING COIL
A		1ST I.F. TRANS. PRI.
B		1ST I.F. " SEC.
C		2ND I.F. " PRI.
D		2ND I.F. " SEC.
E	22-1015	WAVE TRAP
F	22-1042	BROADCAST OSCILLATOR
G	22-1042	BROADCAST ANTENNA
J	22-1023	BROADCAST PADDER
K		SHORT WAVE OSC. (ON GANG)
M	22-1042	SHORT WAVE ANTENNA

Circuit Diagram
Model 6S532
Chassis No. 6A05R

Circuit Diagram
Model 7S598
Chassis No. 7A11

I.F. FREQUENCY 455 KC.
7 TUBE SUPERHETERODYNE
CHASSIS Nº 7A11-3 BAND A.C.-PHONO
ZENITH RADIO CORPORATION
CHICAGO, ILL.

DIAG. Nº	PART Nº	DESCRIPTION	
C1	22-1030	TWO GANG VARIABLE	
C2	22-829	.05 MFD.	200V.
C3	22-868	COMPENSATING COND.	
C4	22-1097	DUAL PADDER	
C5	22-828	.05 MFD.	400V.
C6	22-182	.00025 MFD.	600V.
C7	22-289	50 MMFD.	600V.
C8	22-825	.1 MFD.	400V.
C9	22-327	.02 MFD.	200V.
C10	22-954	.00035 MFD.	600V.
C11	22-470	.00015 MFD.	600V.
C12	22-229	.005 MFD.	600V.
C13	22-448	.004 MFD.	600V.
C14	22-492	.002 MFD.	600V.
C15	22-854	.0005 MFD.	600V.
C16	22-196	.01 MFD.	600V.
C17	22-827	.1 MFD.	200V.
C18		(20 MFD. ELECTROLYTIC	450V.
C19	22-1187	(20 MFD. ELECTROLYTIC	450V.
C20		40 MFD. ELECTROLYTIC	35V.
C21	22-1041	.005 MFD.	600V.

DIAG. Nº	PART Nº	DESCRIPTION	
R1	63-694	33 OHM	¼ W.
R2	63-260	100 M OHM	¼ W.
R3	63-587	4700 OHM	¼ W.
R4	63-593	47 M OHM	¼ W.
R5	63-621	39 OHM	¼ W.
R6	63-589	10 M OHM	¼ W.
R7	63-296	220 M OHM	¼ W.
R8	63-599	1.5 MEGOHM	¼ W.
R9	63-605	1000 OHM	½ W.
R10	63-960	68 M OHM	½ W.
R11	63-713	47 M OHM	¼ W.
R12	63-719	470 M OHM	¼ W.
R13	63-1122	VOLUME CONTROL	
R14	63-594	68 M OHM	¼ W.
R15	63-976	15 MEGOHM	¼ W.
R16	63-657	330 M OHM	¼ W.
R17	63-652	120 M OHM	¼ W.
R18	63-975	82 OHM WIREWOUND	½ W.
R19	63-772	150 M OHM	½ W.
R20	63-659	470 M OHM	¼ W.

DIAG. Nº	PART Nº	DESCRIPTION	
R21	63-1174	420 OHM WIREWOUND	½ W.
1		WAVEMAGNET ASSEMBLY	
2	SB404	ANTENNA COIL ASSEMBLY	
3	SB403	OSCILLATOR COIL ASSEM.	
4		AUTOMATIC TUNING ASSEM.	
5	85-247	BAND SELECTOR SWITCH	
6	SB359	R.F. CHOKE & RES. ASSEM.	
7	SB326	WAVE TRAP COIL ASSEM.	
8	95-703	1ST I.F. TRANSFORMER	
9	95-761	2ND I.F. TRANSFORMER	
10	85-171	PHONO-RADIO SWITCH	
11	SB449	TONE CONTROL ASSEM. (LEFT)	
12	SB449	TONE CONTROL ASSEM (RIGHT)	
13	95-756	PWR. TRANS. 50-60~ 117 V.	
14	100-36	PILOT LIGHT 6.3 V. .25 A.	
15		PICK-UP	

DIAG. Nº	PART Nº	DESCRIPTION
A		1ST I.F. TRANS. PRI.
B		1ST I.F. TRANS. SEC.
C		2ND I.F. TRANS. PRI.
D		2ND I.F. TRANS. SEC.
E	22-1015	WAVETRAP
F		BROADCAST OSC. (NOTE 1)
G		BROADCAST ANT. (NOTE 2)
J		BROADCAST PADDER (NOTE 2)
K		SHORT WAVE OSC. (NOTE 1)
M		SHORT WAVE ANT. (NOTE 2)
Q		POLICE BAND ANT. (NOTE 2)

NOTES:
(1) TRIMMERS F & K ARE MOUNTED ON STRIP #22-1033.
(2) TRIMMERS G, J, M & Q ARE MOUNTED ON STRIP #22-1031.

2-7-41	C20 WAS 20 MFD. - C22 OMITTED

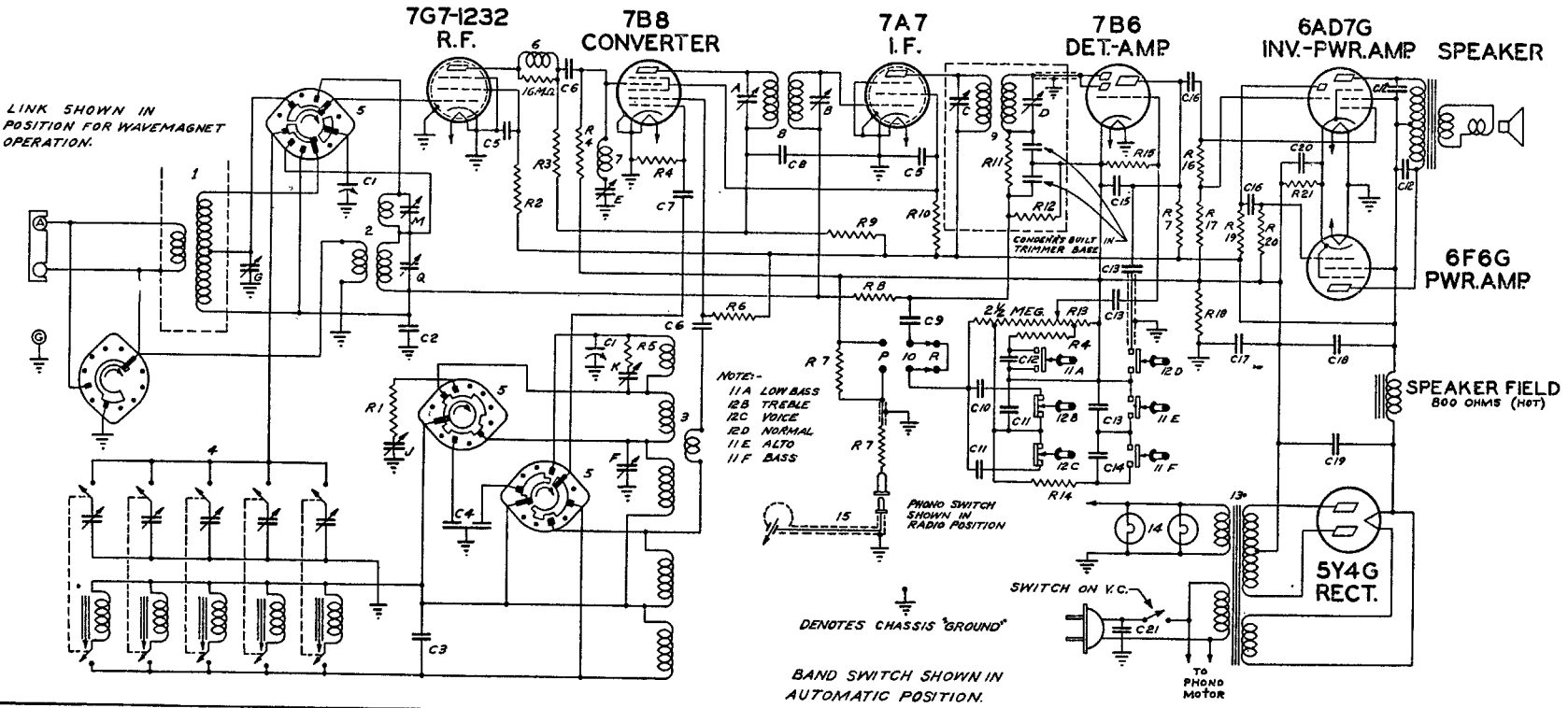

COMPILED BY M. N. BEITMAN, SUPREME PUBLICATIONS

MANUAL OF 1941 MOST POPULAR SERVICE DIAGRAMS

COMPILED BY M. N. BEITMAN, SUPREME PUBLICATIONS

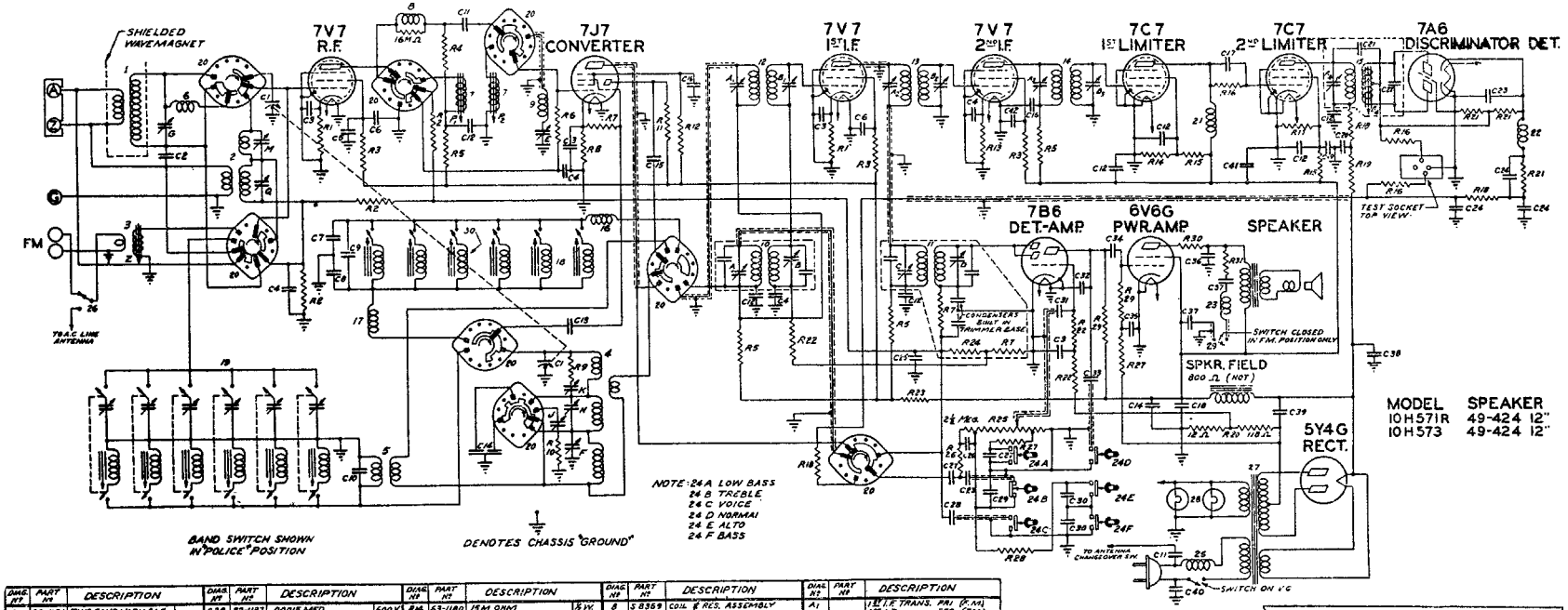

MODEL	SPEAKER
10H571R	49-424 12"
10H573	49-424 12"

DIAG. Nº	PART Nº	DESCRIPTION		DIAG. Nº	PART Nº	DESCRIPTION		DIAG. Nº	PART Nº	DESCRIPTION		DIAG. Nº	PART Nº	DESCRIPTION		DIAG. Nº	PART Nº	DESCRIPTION
C1	22-1121	TWO GANG VARIABLE		C29	22-1197	.0015 MFD.	600V	R14	63-1180	15M OHM	½W.	8	S 8369	COIL & RCS. ASSEMBLY		A1		1ST I.F. TRANS. PRI. (F.M.)
C2	22-319	.005 MFD.	200V	C30	22-1176	.01 MFD.	400V	R15	63-1162	33M OHM	1W.	9	S 8326	WAVETRAP		B1		1ST I.F. - SEC. (F.M.)
C3	22-827	.1 MFD.	200V	C31	22-189	.02 MFD.	400V	R16	63-597	470M OHM	½W.	10	95-763	1ST I.F. TRANSFORMER (A.M.)		A2		2ND I.F. - PRI. (F.M.)
C4	22-829	.05 MFD.	200V	C32	22-1136	.0025 MFD.	600V	R17	63-607	18M OHM	½W.	11	95-764	2ND I.F. - (A.M.)		B2		2ND I.F. - SEC. (F.M.)
C5	22-1123	5MFD. ELECTROLYTIC	300V	C33	22-418	.004 MFD.	600V	R18	63-583	1000 OHM	½W.	12	95-765	1ST I.F. - (F.M.)		A3		3RD I.F. - PRI. (F.M.)
C6	22-263	.01 MFD.	400V	C34	22-830	.02 MFD.	600V	R19	63-679	82M OHM	1W.	13	95-766	2ND I.F. - (F.M.)		B3		3RD I.F. - SEC. (F.M.)
C7	22-1146	30 MMFD. COMP.		C35	22-1202	.04 MFD.	1000V	R20	63-1150	2 SECTION CANDOHM		14	95-767	3RD I.F. - (F.M.)		A4		DISCRIMINATOR I.F. TRANS. PRI.
C8	22-1139	50 MMFD. COMP.		C36	22-1184	.002 MFD.	1000V	R21	63-160	100M OHM	½W.	15	95-788	DISCRIMINATOR I.F. TRANS. (F.M.)		B4		DISCRIMINATOR I.F. - SEC.
C9	22-1139	15 MMFD. CERAMIC		C37	22-366	.04 MFD.	600V	R22	63-271	1 MEGOHM	½W.	16	S 9535	PLATE PEAKING COIL		E	22-1015	WAVETRAP
C10	22-868	COMPENSATING COND.		C38	22-1129	.0005 MFD.	1000V	R23	63-1179	1000 OHM	1W.	17	S 9360	GRID - -		F		BROADCAST OSC. NOTE 1
C11	22-168	.0001 MFD.	600V	C39	22-1184	30 MFD. ELECTROLYTIC	450V	R24	63-773	180M OHM	½W.	18		AUTOMATIC TUNING UNIT (F.M.)		G	22-1042	BROADCAST ANTENNA
C12	22-828	.1 MFD.	400V	C40	22-1041	.003 MFD.	600V	R25	63-1074	VOLUME CONTROL		19		AUTOMATIC TUNING UNIT (B.C.)		J	22-668	BROADCAST PADDER
C13	22-1140	30 MMFD.	600V	C41	22-829	.005 MFD.	600V	R26	63-701	470 OHM	½W.	20	85-284	BAND SELECTOR SWITCH		K		SHORT WAVE OSC. NOTE 1
C14	22-1089	DUAL PADDER		C42	22-692	.002 MFD.	600V	R27	63-593	47M OHM	½W.	21	S 9463	PLATE CHOKE		M		SHORT WAVE ANT. NOTE 2
C15	22-868	.002 MFD.	600V					R28	63-594	68M OHM	½W.	22	S 9503	FM I.F. WAVETRAP		N		POLICE BAND OSC. NOTE 1
C16	22-828	.05 MFD.	400V	R1	63-741	150 OHM	½W.	R29	63-296	220M OHM	½W.	23	20-250	SPEAKER COMP. FILTER		P		ULTRA HIGH FREQ. DET. (PLATE)
C17	22-187	.25 MMFD.	600V	R2	63-600	2.2 MEGOHM	½W.	R30	63-1168	100 OHM	5W.	24	S 8490	TONE CONTROL SW. ASSEM.		Q		ULTRA HIGH FREQ. DET. (GRID)
C18		150 MMFD. ELECTROLYTIC	450V	R3	63-1129	33M OHM	1W.	R31	63-156	10M OHM	1W.	25	S 9504	LINE CHOKE		R		POLICE BAND ANT. NOTE 2
C19	22-1178	5 MFD.	300V	R4	63-1183	2200 OHM	½W.					26	85-238	ANTENNA CHANGEOVER SW.		Z		ULTRA HIGH FREQ. ANTENNA
C20		15 MFD.	250V	R5	63-605	1000 OHM	½W.					27	95-771 / 95-772	POWER TRANS. (50-60~ / 85~)				
C21	22-1196	.0025 MFD.	600V	R6	63-715	100M OHM	½W.			WAVEMAGNET ASSEMBLY		28	100-136	PILOT LIGHT 6.3V. .25A.				NOTE:
C22	22-1143	25 MMFD.	600V	R7	63-713	47M OHM	½W.	1		ANTENNA COIL - (S.W.)		29	85-273	AUDIO FILTER SWITCH				(1) TRIMMERS F, K & N
C23	22-289	50 MMFD.	600V	R8	63-1148	300 OHM	½W.	2	S 9075	ANTENNA COIL - (F.M.)		30	S 9868	MANUAL FM. OSC. COIL				ARE MOUNTED ON
C24	22-1138	.0025 MFD.	600V	R9	63-576	68 OHM	½W.	3	S 9065	OSCILLATOR COIL -		A		1ST I.F. TRANS. PRI. (A.M.)				STRIP #22-850
C25	22-948	.001 MFD.	600V	R10	63-572	15 OHM	½W.	4	S 9074	OSCILLATOR COIL -		B		1ST I.F. - SEC. (A.M.)				(2) TRIMMERS M & Q
C26	22-1130	15 MMFD.	600V	R11	63-943	4700 OHM	1W.	5	S 9466	OSCILLATOR COUPLING COIL		C		2ND I.F. - PRI. (A.M.)				ARE MOUNTED ON
C27	22-1127	.02 MFD.	400V	R12	63-1160	56M OHM	1W.	6	S 9044	LOOP LOADING COIL		D		2ND I.F. - SEC. (A.M.)				STRIP #22-1043
C28	22-1135	.005 MFD.	600V	R13	63-246	150 OHM	½W.	7	S 9066	DETECTOR COIL ASSEM. (F.M.)								

Models 10H571R, 10H573

Chassis No. 10A3R

Note: Adjust FM I.F. frequency to value designated on I.F. transformer.

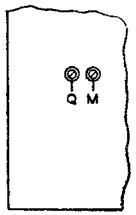

Note!

#S-9434 "Radex" loop may be substituted for 1 turn loop during alignment.

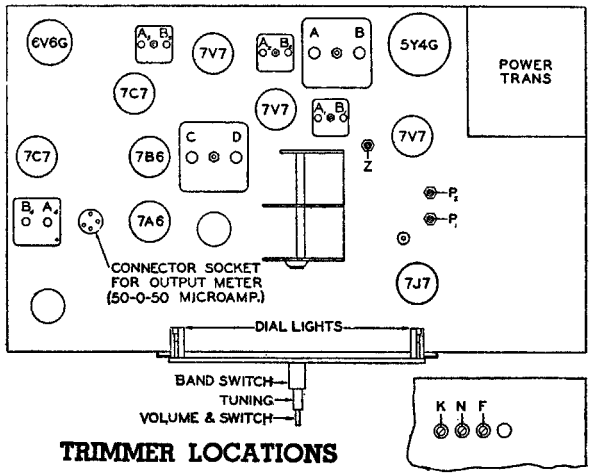

TRIMMER LOCATIONS

191

AMP. MOD. I.F. FREQUENCY 455 KC.
FREQ. MOD. I.F. FREQUENCY 8.6 MC.
10 TUBE SUPERHETERODYNE
CHASSIS Nº 10A3R-A.C.-4 BAND
ZENITH RADIO CORPORATION
CHICAGO, ILL.

MANUAL OF 1941 MOST POPULAR SERVICE DIAGRAMS

Models 10H571R, 10H573

Chassis No. 10A3R

All voltages measured with a 20,000 ohm per volt meter from chassis to socket contact indicated.

All voltages are positive D.C. unless marked otherwise.

Volume control full on.

Line voltage 117 A.C.

Power consumption 90 watts.

Power output 6.5 watts.

Tuning Ranges

540 Kc. to 1600 Kc.
1.5 Mc. to 5.2 Mc.
5.7 Mc. to 18.5 Mc.
41.5 Mc. to 50.5 Mc.

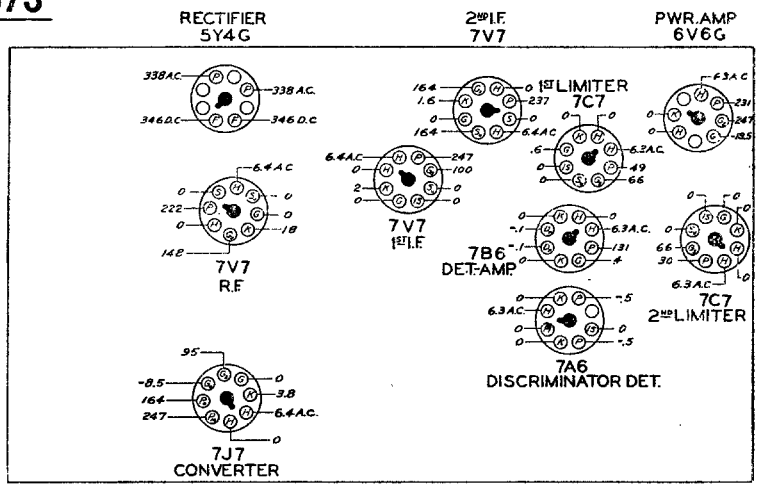

ALIGNMENT PROCEDURE

Opr.	Connect Test Oscillator to	Dummy Antenna	Input Signal Frequency	Band	Set Dial At	Trimmers	Purpose
1	Converter Grid	.5 mfd.	455 Kc.	BC	600 Kc.	A, B, C, D,	Align I. F.
2	R. F. Grid	"	455 Kc.	BC	600 Kc.	E	Adj. Wave Trap for Minimum
3	Antenna Z and G	400 ohms	18 Mc.	SW	18 Mc.	K	Set Oscillator to Scale
4	"	"	16 Mc.	SW	16 Mc.	M	Align Antenna
5	"	"	5.0 Mc.	Med.	5.0 Mc.	N	Set Oscillator to Scale
6	"	"	4.5 Mc.	Med.	4.5 Mc.	Q	Align Antenna
7	1 Turn Loop Made with Generator Leads to 10" dia. See Note!	—	1400 Kc.	BC	1400 Kc.	F	Set Oscillator to Scale
8		—	1400 Kc.	BC	1400 Kc.	G	Align Antenna
9		—	600 Kc.	BC	600 Kc.	J	Rock Gang to Track BC Padder
	F. M. ALIGNMENT — See Pages 126-127 X — FM output meter across full discriminator load. Y — FM output meter across half discriminator load.						
10	7V7 2nd I.F. Grid	.5 mfd.	8.6 Mc.	Manual FM	8.6 Mc.	A 4	Align for Maximum deflection—Y
11	"	"	8.6 Mc.	"	8.6 Mc.	B 4	Align for Zero deflection—X
12	"	"	8.6 Mc.	"	8.6 Mc.	A 3 - B 3	Align for Maximum deflection—Y
13	7V7 1st I. F. Grid	"	8.6 Mc.	"	8.6 Mc.	A 2 - B 2	" — Y
14	Converter Grid	"	8.6 Mc.	"	8.6 Mc.	A 1 - B 1	" — Y
15	FM Ant. Terminals	100 ohms	46. Mc.	"	46. Mc.	Adj. Cam on Gang Shaft to Scale Osc.	Align for Zero deflection—X
16	"	"	42.5 Mc.	"	42.5 Mc.	P1	Align for Maximum deflection—Y
17	"	"	49. Mc.	"	49. Mc.	P 2	" — Y
18	"	"	46. Mc.	"	46. Mc.	Z	" — Y

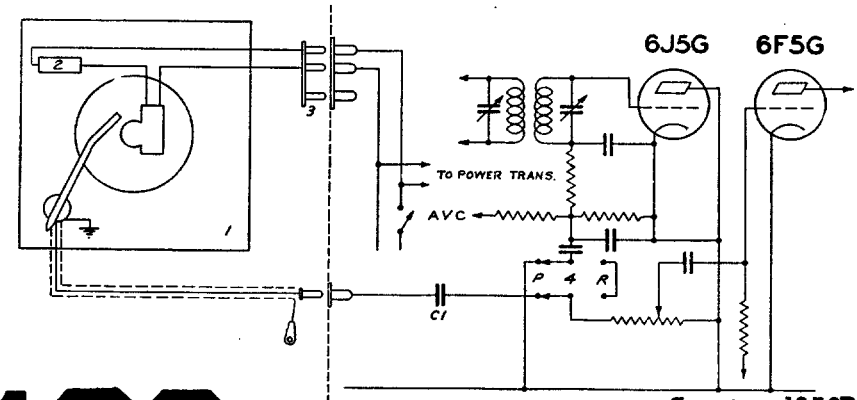

DIAG. Nº	PART Nº	DESCRIPTION	
C1	22-1189	.00075 MFD.	600 V.
1	169-63 169-64	WEBSTER AUTOMATIC RECORD PLAYER	60~ 50~
2	85-191	A.C. SWITCH	
3	58-85	A.C. PLUG	
4	85-228	PHONO-RADIO SW.	

PHONO CIRCUIT DATA
MODEL SPEAKER
10S599 49-442-14"
CHASSIS Nº10A2R

Same as 10A2R with audio compensation revised to match new pickup.

COMPILED BY M. N. BEITMAN, SUPREME PUBLICATIONS