Most - Often - Needed

1926-1938

RADIO DIAGRAMS

and Servicing Information

Compiled by

M. N. BEITMAN

SUPREME PUBLICATIONS
CHICAGO

Index

Allied Radio
SG-8 6
A9710 7
A9711 7
A9712 7

Apex
10 213
46, 47 214

Arvin
see Noblitt Sp.

Atwater Kent
Chassis F 16
30 8
32 8
35 8
37 9
38 11
40 10
42 10
43 12-13
44, 45 10
46 12-13
47 12
48 8
52 10
53 12-13
55, 55C 14
56 10
57 10
60, 60C 15
70 16
81 17
82 18
84 early 19
84 late 20
84F early 19
84F late 20
85 18
145 21
155 22
165 23
317 24
325 21
328 25
337 24
856 26
976 26

Baldwin Radio
80 27

Belmont Radio
525 29

Bosch
60 204

Brandes Radio
B15, B16 28

Buckingham Radio
80 29

Chevrolet
364441 208
600565 209
601574 210
985100 211

Chrysler
CT-11 116

Clarion
51, 53 202
55 202
480 203

Columbia Radio
SG-8 6

Corona Radio
127 187

Crosley Corp.
5B3 31
6H2 35
30-S 30
31-S 30
33-S 30
34-S 30
40-S 30
41-S 30
42-S 30
48 33
54 33
57 33
82-S 30
124 36
125 32
147 37
148 37
158 38
160 39
167 40
168 41
169 42

Crosley Corp.
170 43
171 44
172 32
515 45
517 46
536 34
547 46
555 47
666 48
706 49
716 51
726 50
5515 45
5536 34
5555 47
5666 48

Day-Fan
5091 78

Delco
see United Mot.

Detrola Radio
5W, 5X 52
100A 53
106 53
134 53

Edison
R-6, R-7 55

Emerson Radio
UV4 56
U6A 54
19 56
107 54
AD-108 57
110 57
111 54
125 57
AL-130 56
AL-132 56
AL-149 56
AL-168 56

Eveready
50 113
52-54 113

Fada Radio
360 59

Fairbanks Morse
9A 58

Galvin Mfg. Co.
5T1 60
5T2 60
5Y, 5-2 60
6T, 6Y, 6-2 60
50 61
60 61

General Electric
S-22 159
S-22A 160
H-31 177
H-32 175
B-40 169
F-40 62
T-41 174
S-42 159
S-42B 171
K-43 179
K-50-P 169
H-51 177
K-51-P 169
K-52 179
K-53 179
L-53 180
E-61 64-65
E-62 64-65
K-62 163
A-63 63
F-63 67
K-63 181
A-65 63
F-65 67
F-66 67
E-68 64-65
J-70 157
H-71 177
J-75 157
J-80 161
E-81 69
A-82 68
A-83 70
A-85 70
E-86 69
A-87 68
E-101 71
E-105, E-106 71
E-126 66

General Househo.
5B 73
7B 76
8A 74
11G 75
12B, 12W 72
501 73
520, 530 73
550 73
750-753 76
801 74
1191, 1191B 75
1291 72
1297 72

General Motors
120 77
130 77
140 77
A5003 78
A5004 78
A5010 78
5091 78

Graybar Electric
GT-7 157
GB-8 159
GB-8-A 160
GT-8 161
GB-9 163
GC-13 157
GC-14 161
GB-100 175
GB-300 165
GB-310 167
GB-330 176
500, 550 172
GB-678 174
GB-700 177
GB-770 177
GB-900 177
GB-989 162

Grisby-Grunow
see Majestic

Grunow
see General H.

Hallicrafters
Sky Buddy 101
5T 101

International
40, 41 103
43, 44 103
66X 103
86 103
96 103
1019 102

Kadette
see International

Kolster Radio
K20, K22 104
K27 104

Majestic (old)
7BP3 79
7P3 79
7BP6 79
7P6 79
8P3 79
8P6 79
9P3 79
9P6 79
15, 15B 80

Majestic (old)
20 81
55 82
59 82
60 83
66 84
70 85-86
70B 85-86
71, 72 85-86
90 87
90B 88
91, 92 87
93 88
116 89
130 90
130A 90
131, 132 90
160 91
200 92
220 93
230A 94
290-294 95
330 96
360 97
400 98
400A 99
460 100

Mid-West Radio
16-34 105

Montgomery Ward
62-49 106
62-68 106
62-70 106
62-72 106
62-97 107
62-99 107
62-123 110
62-131 110
62-133 110
62-142 110
62-144 110
62-152 110
62-158 110
62-185 108
62-187 108
62-190 108
62-196 108
62-233 109
62-265 111
62-425 111

Motorola
see Galvin

3

National Carbon
50 113
52 to 54 113

Noblitt Sparks
RE-29 112
RE-35 112
58, 58-A 112
88 112

Oldsmobile
982006 212

Pacific Radio
40MB1 7

Philco Radio
5 115
T11, CT-11 116
16 117
20, 20A 118
21 118
45 119
50, 50A 120
53 121-122

Philco Radio
54 121-122
57 123
60 124
66 114
70, 70A 125-126
70 AVC 127
70A AVC 127
71 128-129
80 130-131
82 133
84 132
86 133
87 134-135
89 (123) 136
90, 90A 137-140
96, 96A 141-142
118 143
610 143
620 (late) 144
623 145
650 146
37-10 147
37-11 147
37-33 148
37-38 149
37-84 149
37-93 150
37-602 151
37-623 152
37-640 153
37-650 154
38-116 155

RCA Mfg. Co.
4X 156
4X3, 4X4 156
R-4 157
5T6 158
5T7, 5T8 158
R-6 157
R-7 159
R-7-A 160
R-8 161
R-9 159
R-10 162
R-11 163
R-12 161
13K 164
Radiola 16 165
Radiola 17 166
R-17-M 171
Radiola 18 167
R-28-P 169
R-32 168
M-34 169
R-35 170
R-39 170
R-43 171
44 172
RE-45 168
46 172
Radiola 47 173
Radiola 48 174
R-50 175
R-52 168
R-55 175
RE-57 170
Radiola 60 176
RE-75 168
Radiola 80 177
" 82,86 177
94BK2 175
94BT2 175
96K2 178
96T3 178
97E 178
97KG 178
97T 178
R-100 179
R-101 179
110 179
111 179
U-111 180
114 180
115 179
120 181
810K, 810T 182
811K 183

Sears, Roebuck
1320 184
1322 184
1324 184
1326X 184

Sears, Roebuck
1386 184
1450 184
1454 184
1456 184
1531 184
1907 187
1923 185
1933 185
1939 187
1957 187
1983 185
1993 185
4414, 4415 186
4500 186
4505, 4506 186
4509-4511 186
7004 184

Sparton
518, 518X 191
558 191
568 191
578, 578X 191
589 192
591 189
593 189
600 192
610 192
620 192
737 AC 192
930 188
931 AC 189
1068 190
1078 190

Stewart-Warner
R-100-A,B,E 193
R-102 195
112 194
R-134 197
R-136 196
R-160 198
950 AC 199
1121 194
1341-1349 197
1361-1369 196
1601-1609 198

Stromberg-Carls.
635 200

Supreme Instrum.
504 201

Transf. C. of A.
51 202
53 202
55 202
480 203

United Am. Bosch
60, 61 204

United Motors
R-640 205
4037 207
364441 208
600565 209
601574 210
980441 207
982006 212
985100 211

U.S.Radio & Tel.
10 213
46, 46A 214
47, 47A 214

Wards
see Montgomery

Wells Gardner
7D 110

Westinghouse El.
WR-4 174
WR-5, 6, 7 177
WR-10 159
WR-10-A 160
WR-12 159
WR-15 163
WR-15-A 162
WR-17 157
WR-18 161
WR-27 169
WR-32 179
WR-33 169
WR-35 179
WR-36 181

Zenith Radio
4-F-227 215
5-F-134 216
5-F-166 216
5-J-217 217
5-J-247 217
5-J-255 217
5-R-303 218
5-R-312 218
5-R-316 218
5-R-317 218
5-R-337 218
5-S-29 219
5-S-56 219
5-S-119 206
5-S-126 206
5-S-127 206
5-S-150 206
5-S-151 206
5-S-161 206
5-S-201 220
5-S-218 220
5-S-220 220
5-S-228 220
5-S-237 220

Zenith Radio
5-S-250 220
5-S-252 220
5-X-230 221
5-X-248 221
5-X-274 221
6-S-27 222
6-S-52 222
6-S-128 223
6-S-137 223
6-S-147 223
6-S-152 223
6-S-157 223
6-S-203 224
6-S-222 224
6-S-223 224
6-S-229 224
6-S-239 224
6-S-241 224
6-S-254 225
6-S-256 225
6-V-27 226
6-V-62 226
7-D-119 227
7-D-126 227
7-D-127 227
7-D-138 227
7-D-148 227
7-D-151 227
7-D-162 227
7-D-168 227
7-J-232 229
7-D-259 229
7-S-28 230
7-S-53 230
7-S-204 228
7-S-240 228
7-S-242 228
7-S-258 228
7-S-260 228
7-S-261 228
7-S-323 231
7-S-342 231
7-S-343 231
7-S-363 231
7-S-364 231
7-S-366 231
8-S-129 232
8-S-154 232
9-S-203 233
9-S-232 233
9-S-242 233
9-S-244 233
9-S-262 233
9-S-263 233
9-S-264 233
10-S-130 234
10-S-147 234
10-S-153 234
10-S-155 234
10-S-156 234
10-S-157 234
10-S-160 234

Zenith Radio
12-A-57 235
12-A-58 235
12-L-57 235
12-L58 235
12-S-205 236
12-S-232 236
12-S-245 236
12-S-265 236
12-S-266 236
12-S-267 236
12-S-268 236
12-U-158 237
12-U-159 237
50, 52 238
54 238
60 to 62 238
64 238
67 238
474 239
585 239
602 238
612 238
622 238
642 238
672 238
705-07 240
711, 712 240
715 239
750 240
755, 756 239
785 239
1004 234
1202 235
1203 237
1204 236
2052A,B,C 240
2053 239
5408 215
5513 219
5516 206
5518 216
5521 220
5523 221
5524 217
5528 218
5619 222
5621 226
5634 223
5638 224
5644 225
5704 230
5707 227
5709 228
5711 229
5714 231
5801 232
5905 233

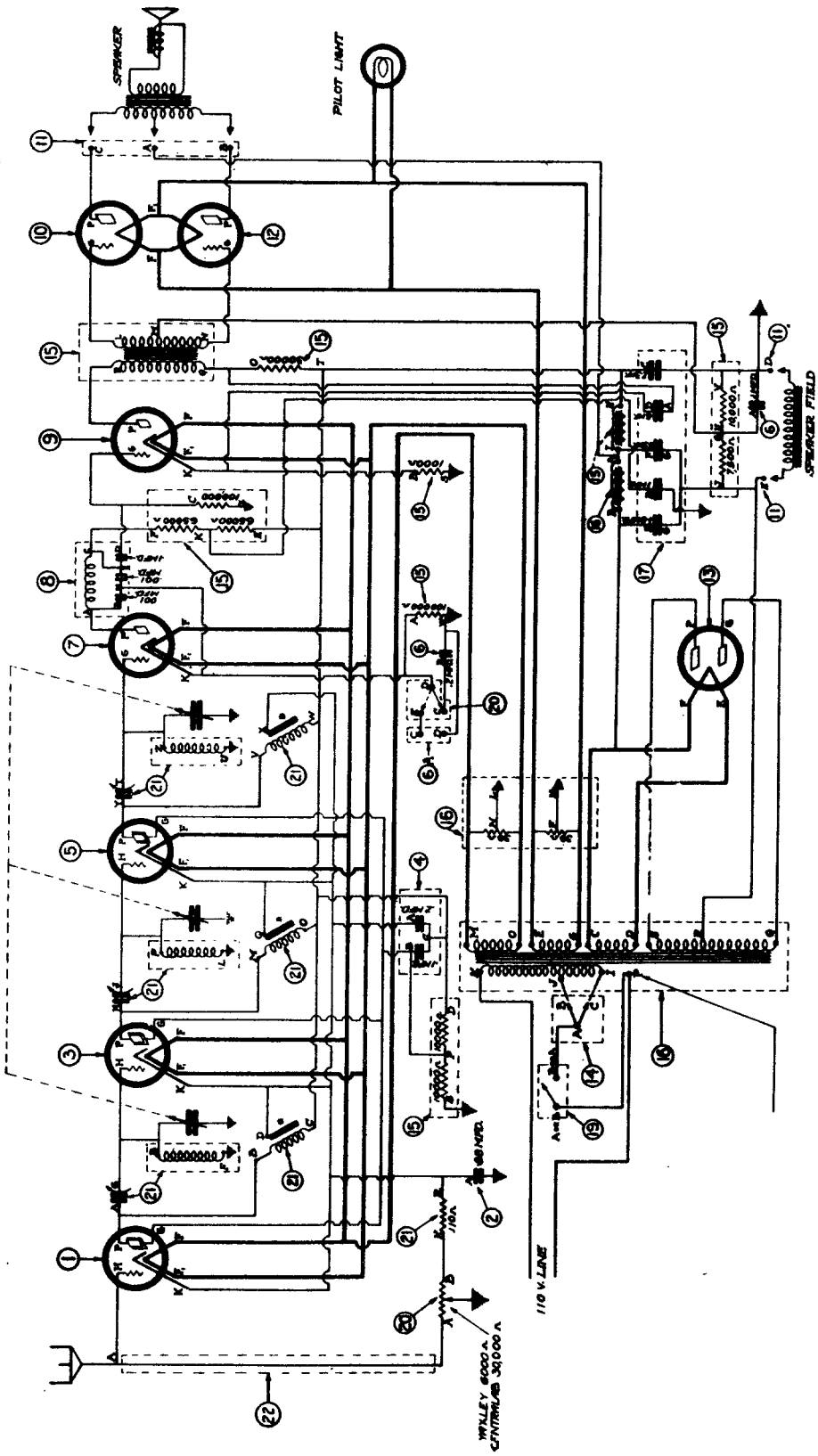

Allied Radio Corp.
Columbia SG-8

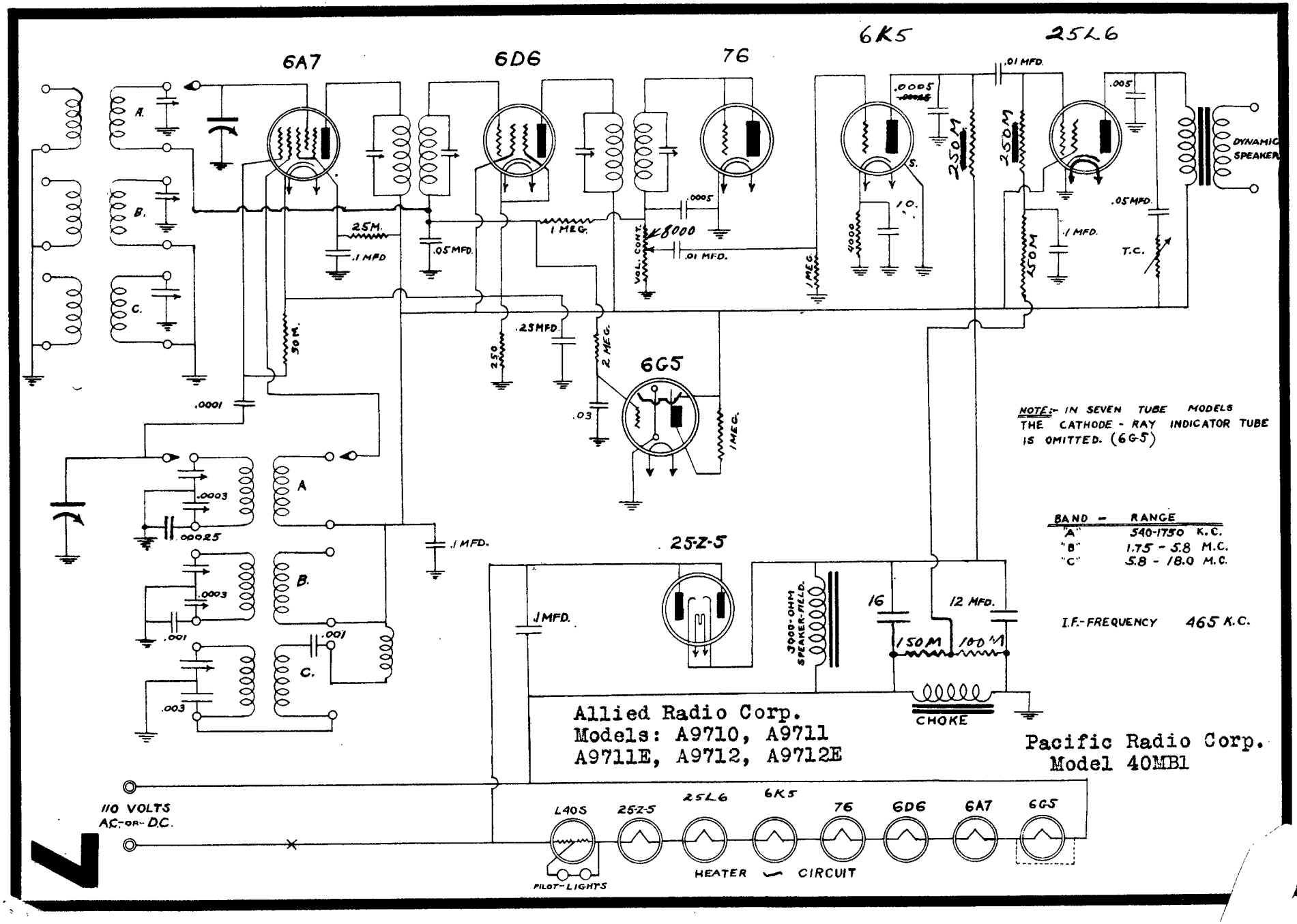
6A7
6D6
76
6K5
25L6
6G5
25Z-5
DYNAMIC SPEAKER
NOTE:- IN SEVEN TUBE MODELS THE CATHODE - RAY INDICATOR TUBE IS OMITTED. (6G-5)
BAND - RANGE
"A" 540-1750 K.C.
"B" 1.75 - 5.8 M.C.
"C" 5.8 - 18.0 M.C.
I.F.-FREQUENCY 465 K.C.
Allied Radio Corp.
Models: A9710, A9711
A9711E, A9712, A9712E
Pacific Radio Corp.
Model 40MB1
110 VOLTS AC-OR-DC.
L40S
PILOT-LIGHTS
HEATER CIRCUIT
CHOKE
3000-OHM SPEAKER-FIELD.
VOL. CONT.
T.C.

MANUAL OF MOST-OFTEN-NEEDED RADIO DIAGRAMS

MODEL 30, 32, 35 AND 48

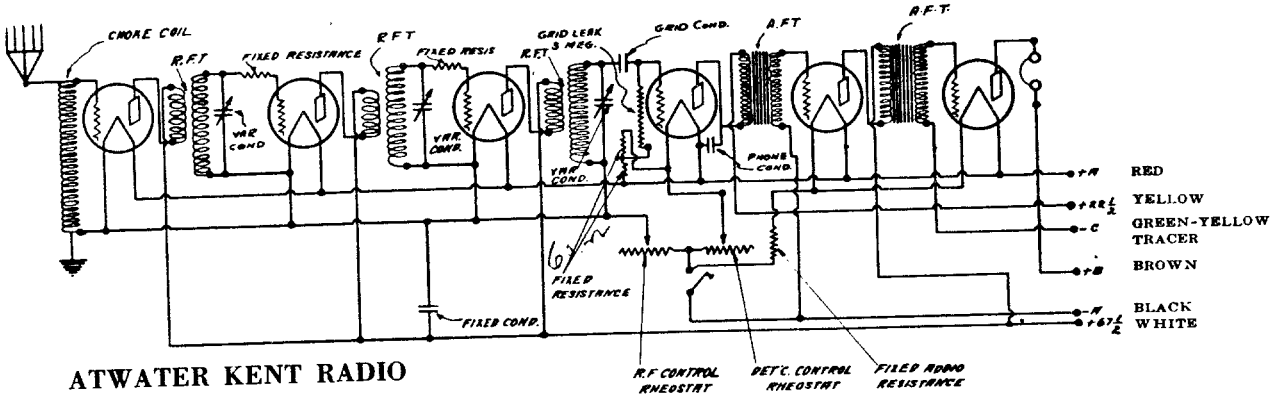

ATWATER KENT RADIO

WIRING DIAGRAM OF MODEL 30, 35 AND 48.

In Model 35, one rheostat controls the three R. F. filaments and a fixed resistor is connected in series with the detector and two A. F. filaments

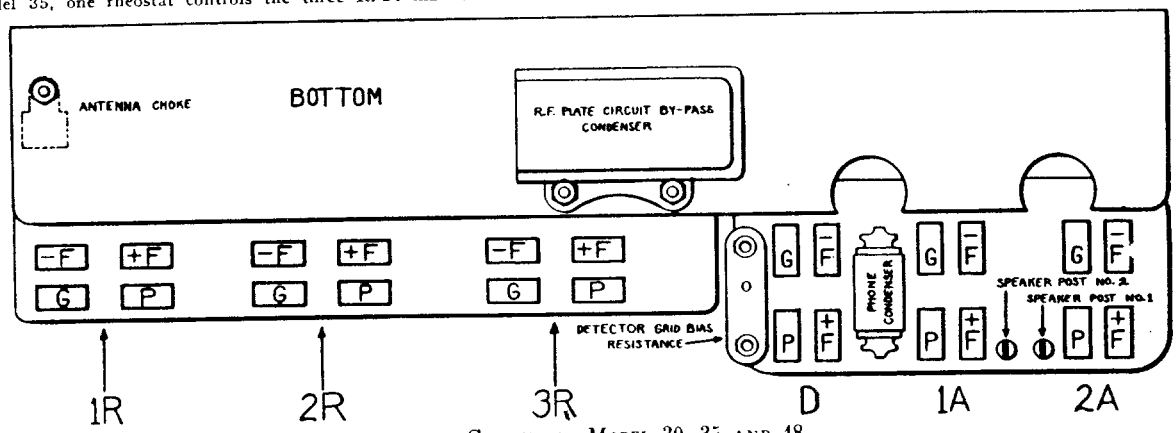

CHART FOR MODEL 30, 35 AND 48.

Early Model 30 Sets have separate R. F. sockets, but the socket contacts are in same relative position as shown in above chart.

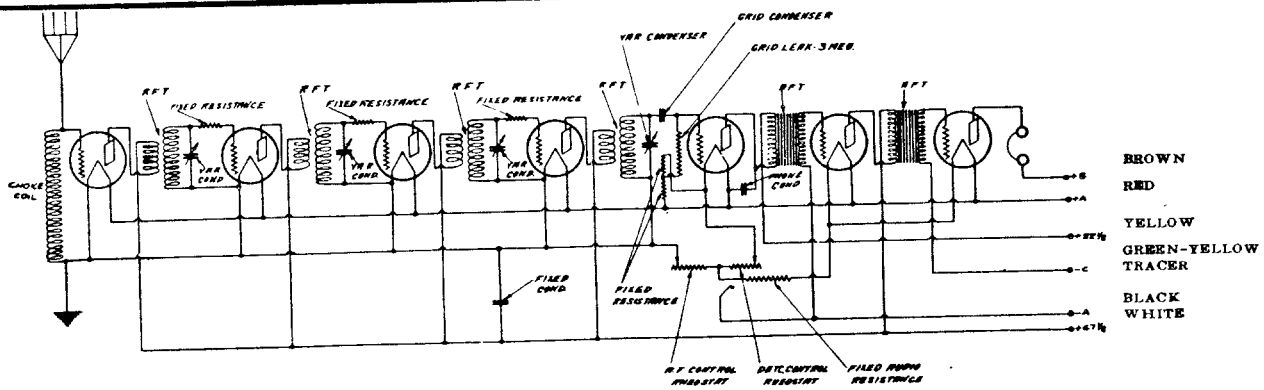

WIRING DIAGRAM OF MODEL 32.

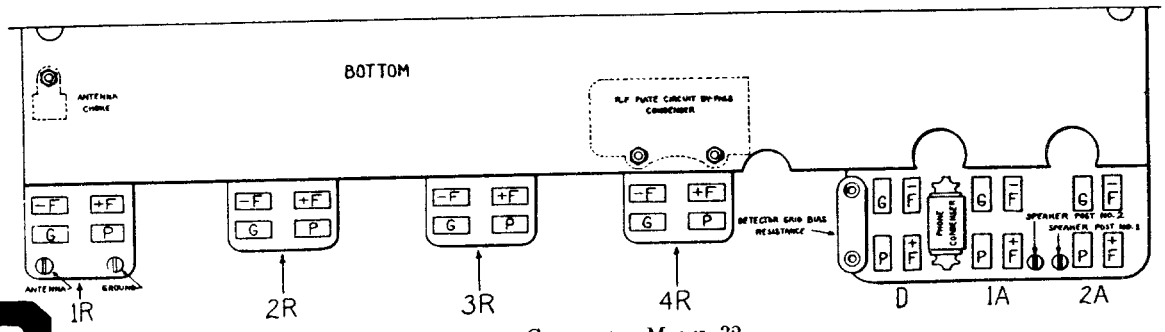

CHART FOR MODEL 32.

COMPILED BY M. N. BEITMAN, SUPREME PUBLICATIONS

MANUAL OF MOST-OFTEN-NEEDED RADIO DIAGRAMS

ATWATER KENT RADIO

MODEL 37, 37-F. 37-C CHASSIS

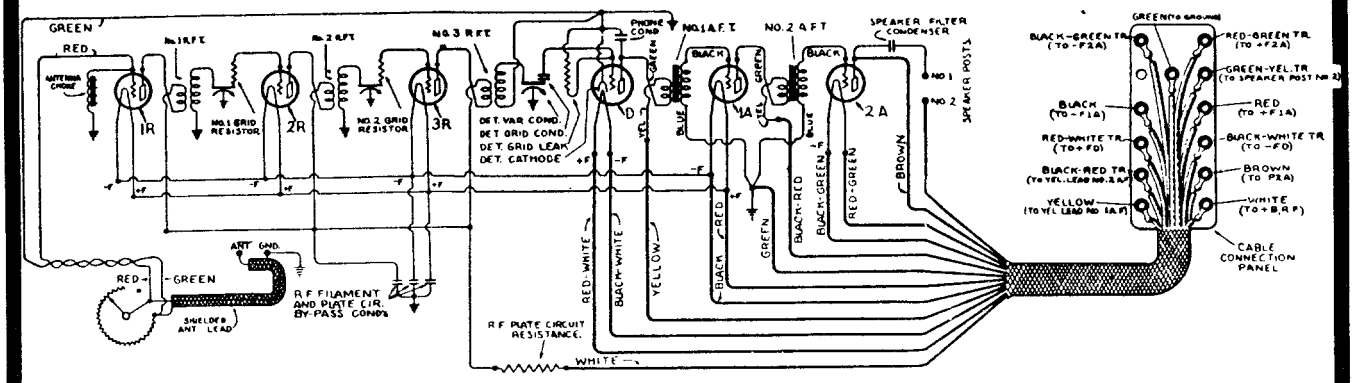

WIRING DIAGRAM OF MODEL 37, 37-F, 37-C.

A 2nd-A. F. filament-shunt resistor is used before Serial No. 1,385,000, in which case speaker post No. 2 connects to the centre-tap of this resistor, and the green-yellow tracer lead is not used. The R. F. plate circuit resistor is used after Serial No. 1,385,000.

In Model 37-C the on-off switch is connected to the two terminals on either side of the ground eyelet. A 2nd A. F. filament shunt resistor is used in the chassis of all Model 37-C receivers.

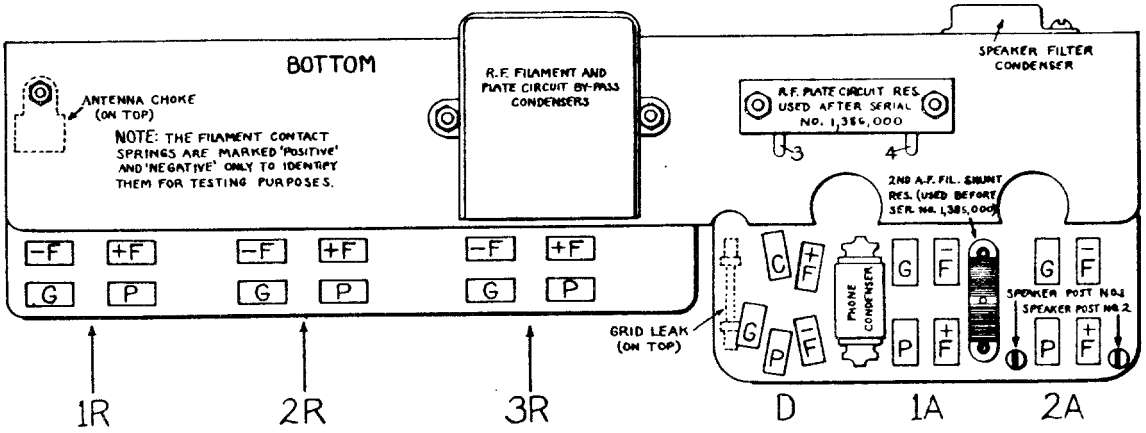

CHART FOR MODEL 37, 37-F, 37-C.

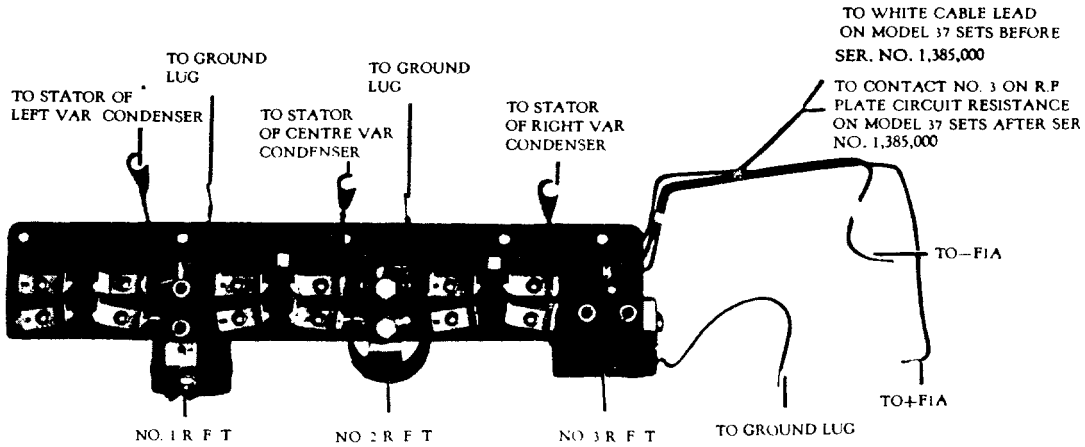

VIEW OF R. F. AMPLIFIER.

ATWATER KENT RADIO

MODEL 40, 40-F, 42, 42-F, 44, 44-F, 45, 52, 56 AND 57 CHASSIS

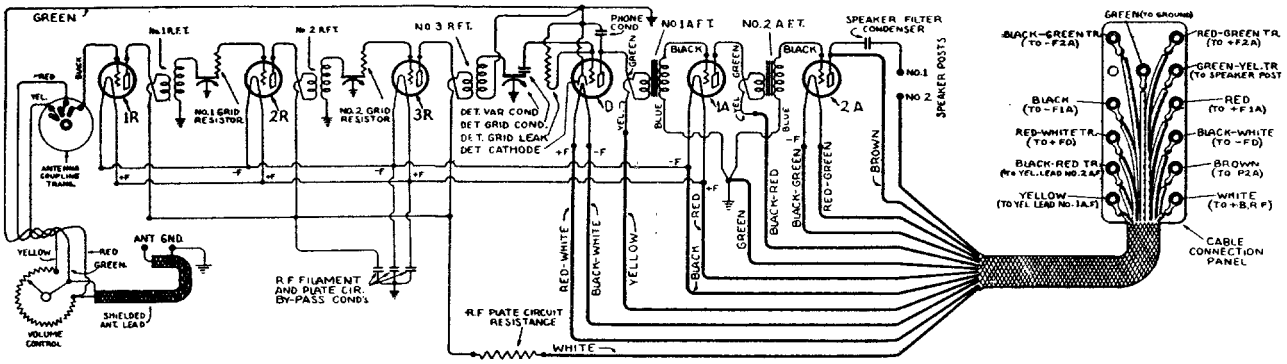

WIRING DIAGRAM OF MODEL 40, 40-F, 42, 42-F, 52, 56 AND 57.

Model 52 does not have the shielded antenna lead, but is provided with two twenty-foot leads which are connected to the volume control, black antenna and black-green tracer for ground. Model 56 and 57 have antenna and ground posts at the bottom of the cabinet.

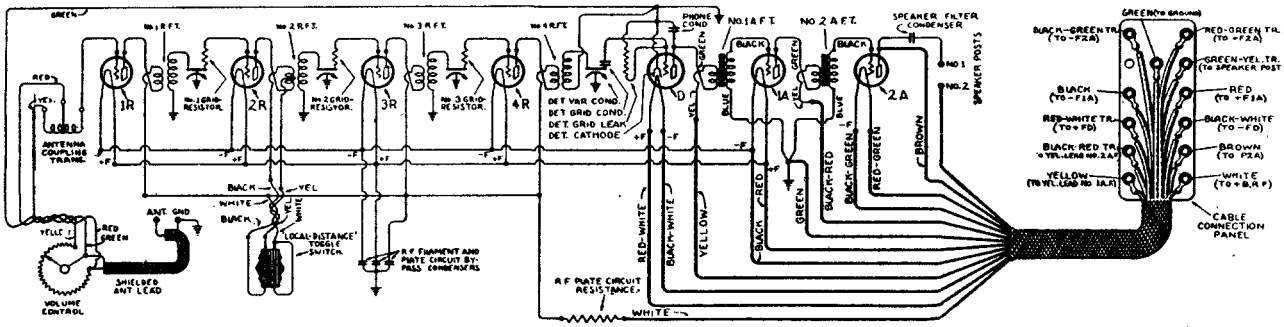

WIRING DIAGRAM OF MODEL 44, 44-F AND 45.

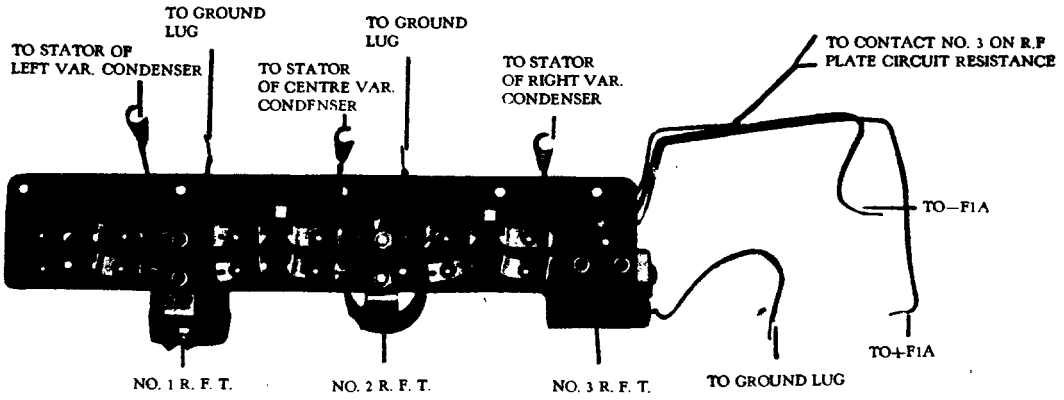

VIEW OF R. F. AMPLIFIER ASSEMBLY IN MODEL 40, 40-F, 42, 42-F, 52, 56 AND 57.

COMPILED BY M. N. BEITMAN, SUPREME PUBLICATIONS

ATWATER KENT RADIO

MODEL 38 CHASSIS

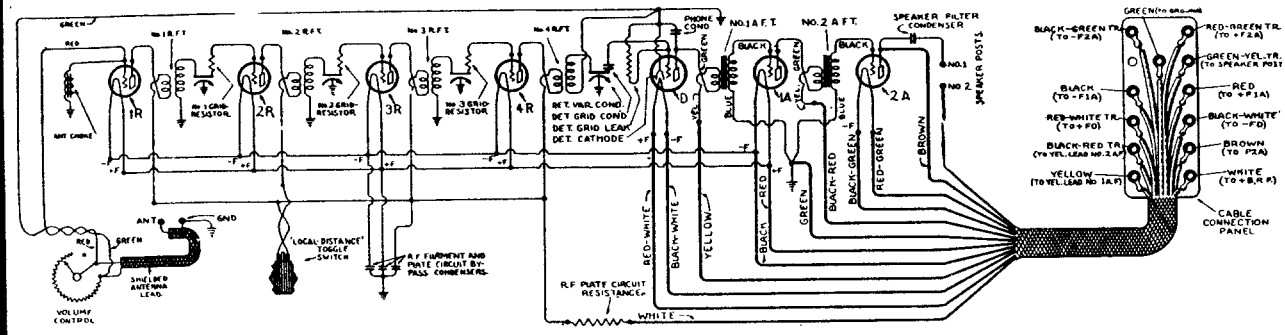

WIRING DIAGRAM OF MODEL 38.

A 2nd-A. F. filament-shunt resistor is used before Serial No. 1,752,000 and the green-yellow tracer cable lead is not used.

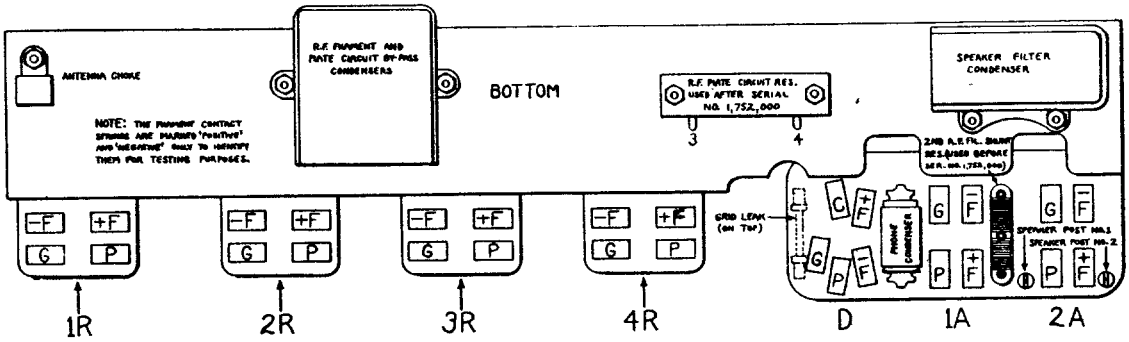

CHART FOR MODEL 38.

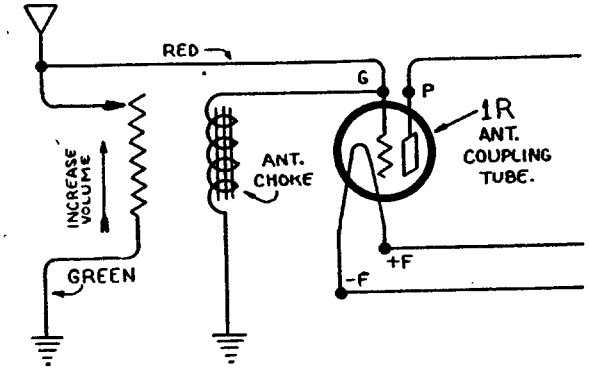

SCHEMATIC DIAGRAM OF VOLUME CONTROL IN MODEL 37, 37-F, 37-C AND 38.

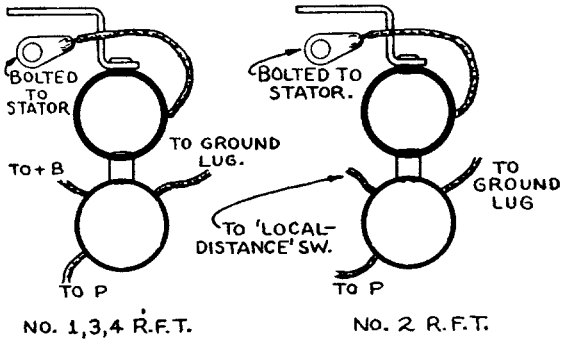

SKETCH SHOWING CONNECTIONS FROM R. F. TRANSFORMERS, MODEL 38.

ATWATER KENT RADIO

MODEL 43, 46, 47 AND 53

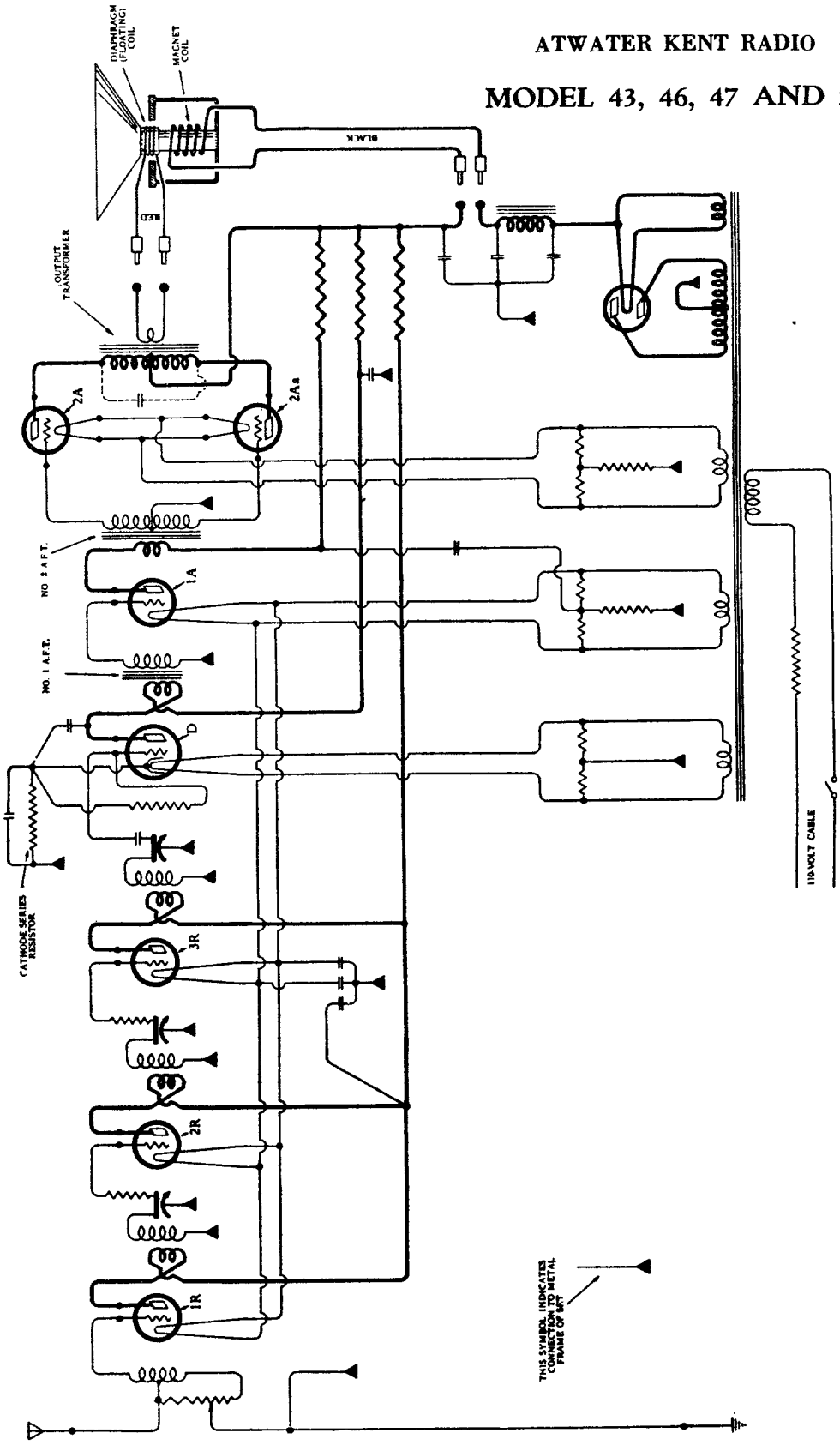

DIAGRAM OF MODEL 43, 46 AND 53. (The output transformer is sealed in the power unit.)
Model 47 is similar to this but has one extra stage of R. F. amplification and a local-distance switch similar to that in Model 44.

MANUAL OF MOST-OFTEN-NEEDED RADIO DIAGRAMS

MODEL 43, 46, 47 AND 53 DIAGRAM

ATWATER KENT RADIO

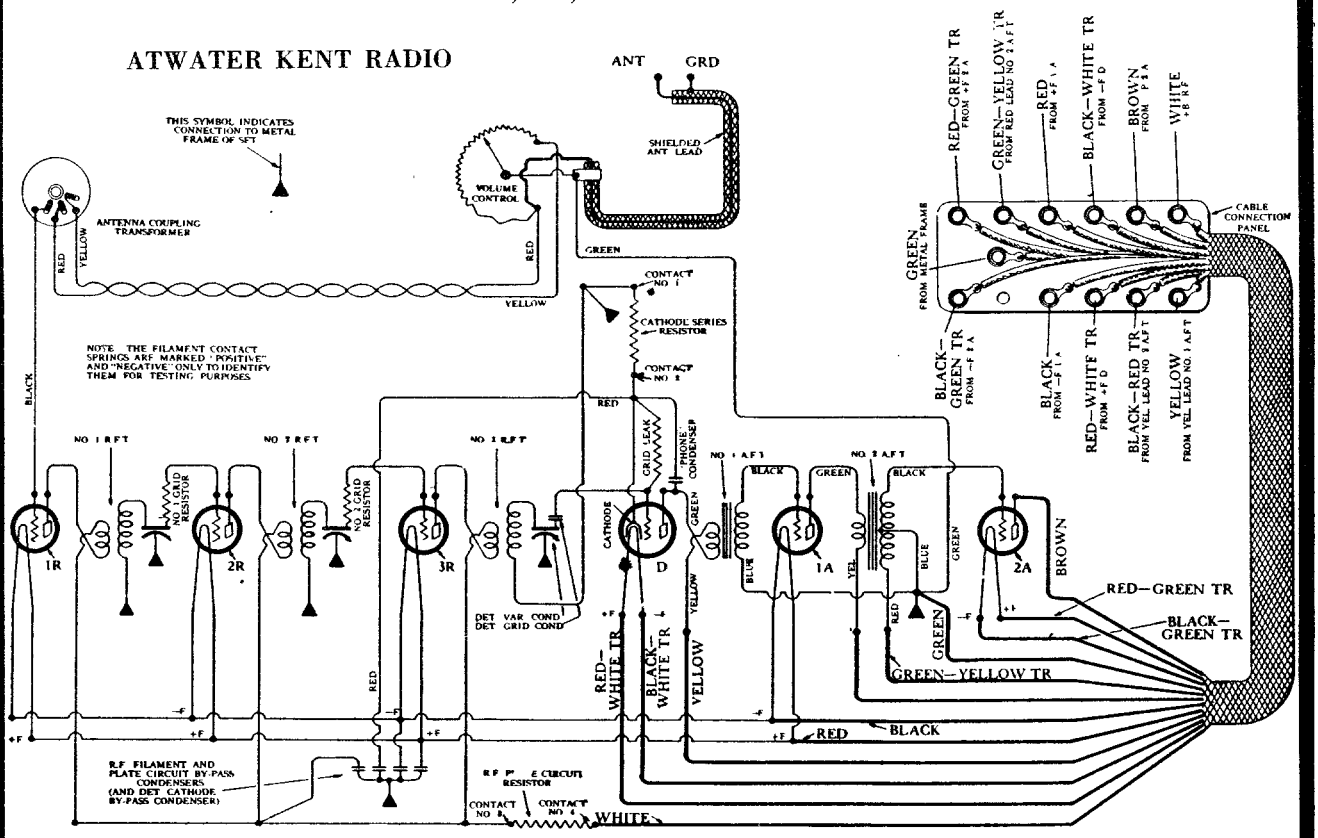

WIRING DIAGRAM OF MODEL 43, 46 AND 53.
The +B, 1st A. F. cable lead is black with a red tracer.
Model 47 is similar but has one additional stage of R. F. amplification and a local-distance switch like that on Model 44.

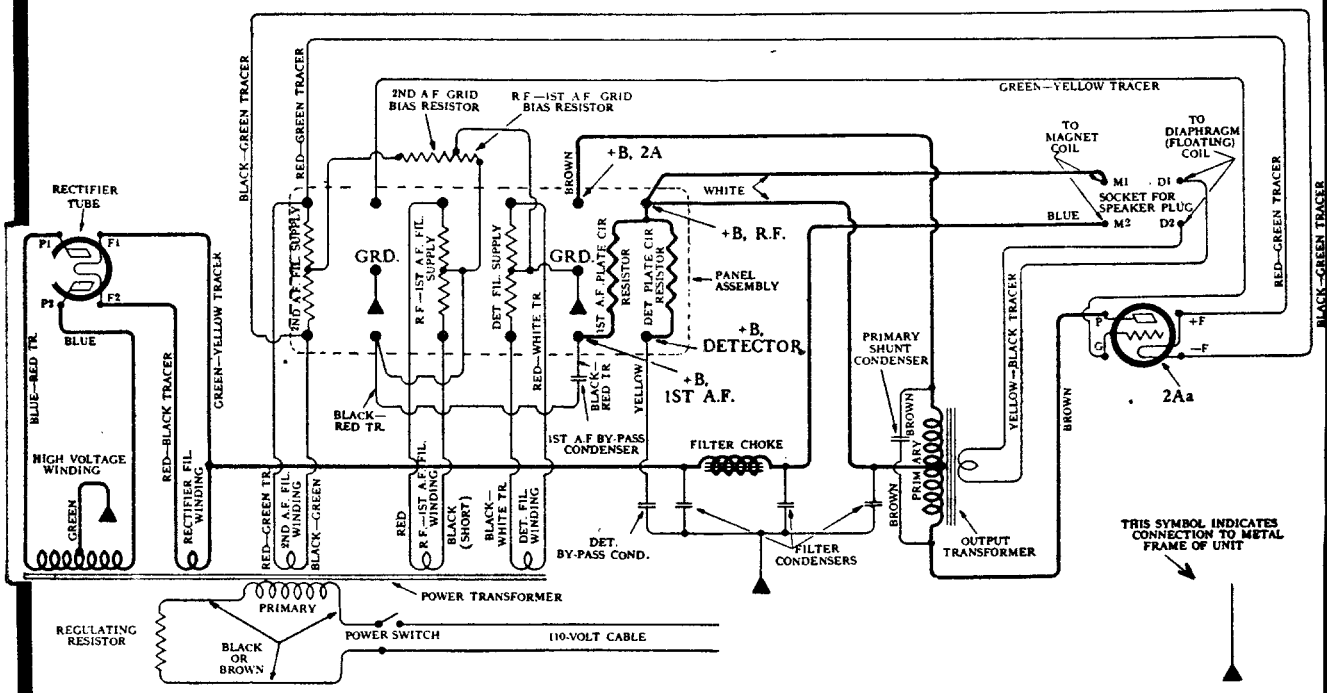

WIRING DIAGRAM OF POWER UNIT IN MODEL 43.

MODEL 55 AND 55-C

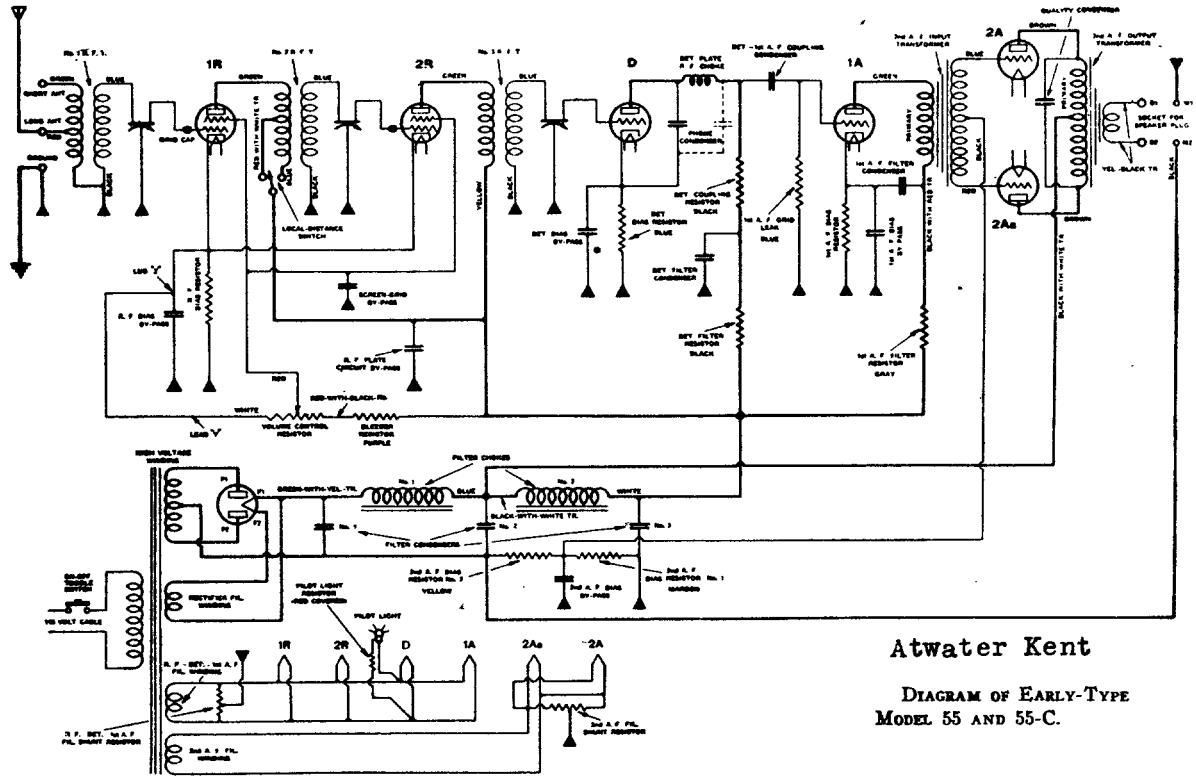

Atwater Kent

DIAGRAM OF EARLY-TYPE MODEL 55 AND 55-C.

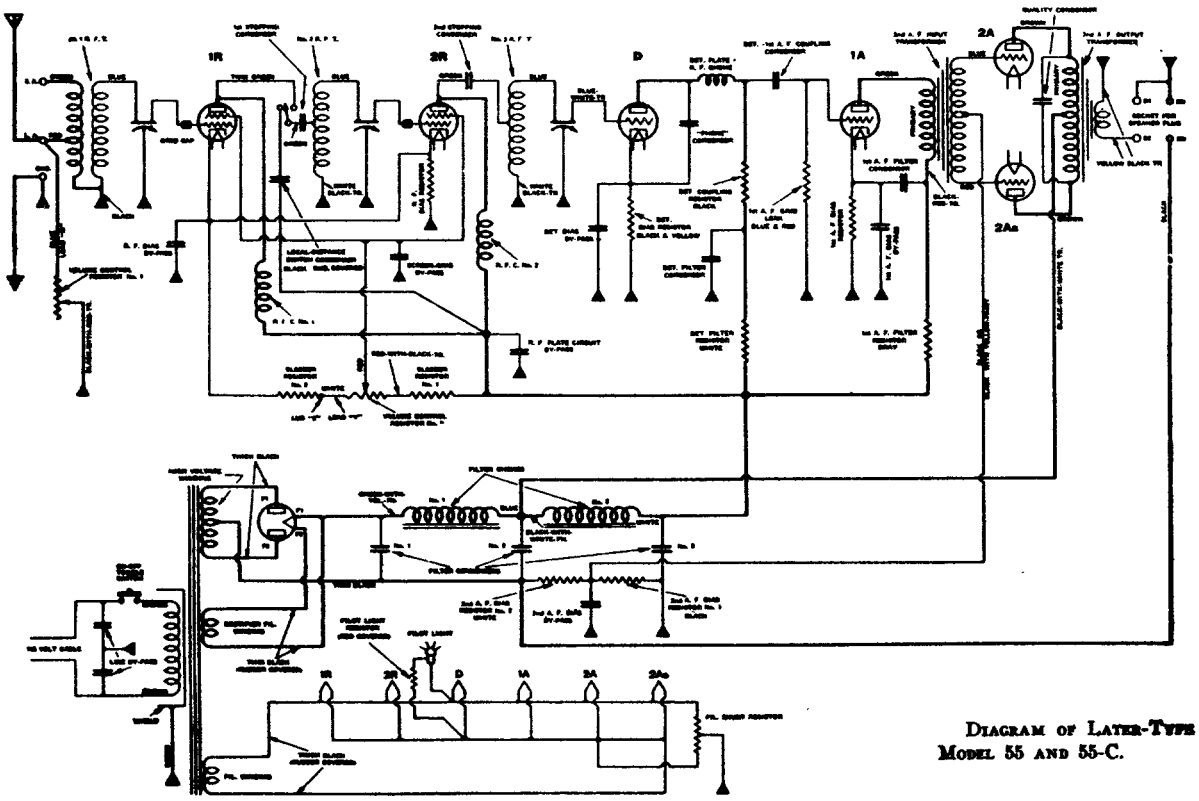

DIAGRAM OF LATER-TYPE MODEL 55 AND 55-C.

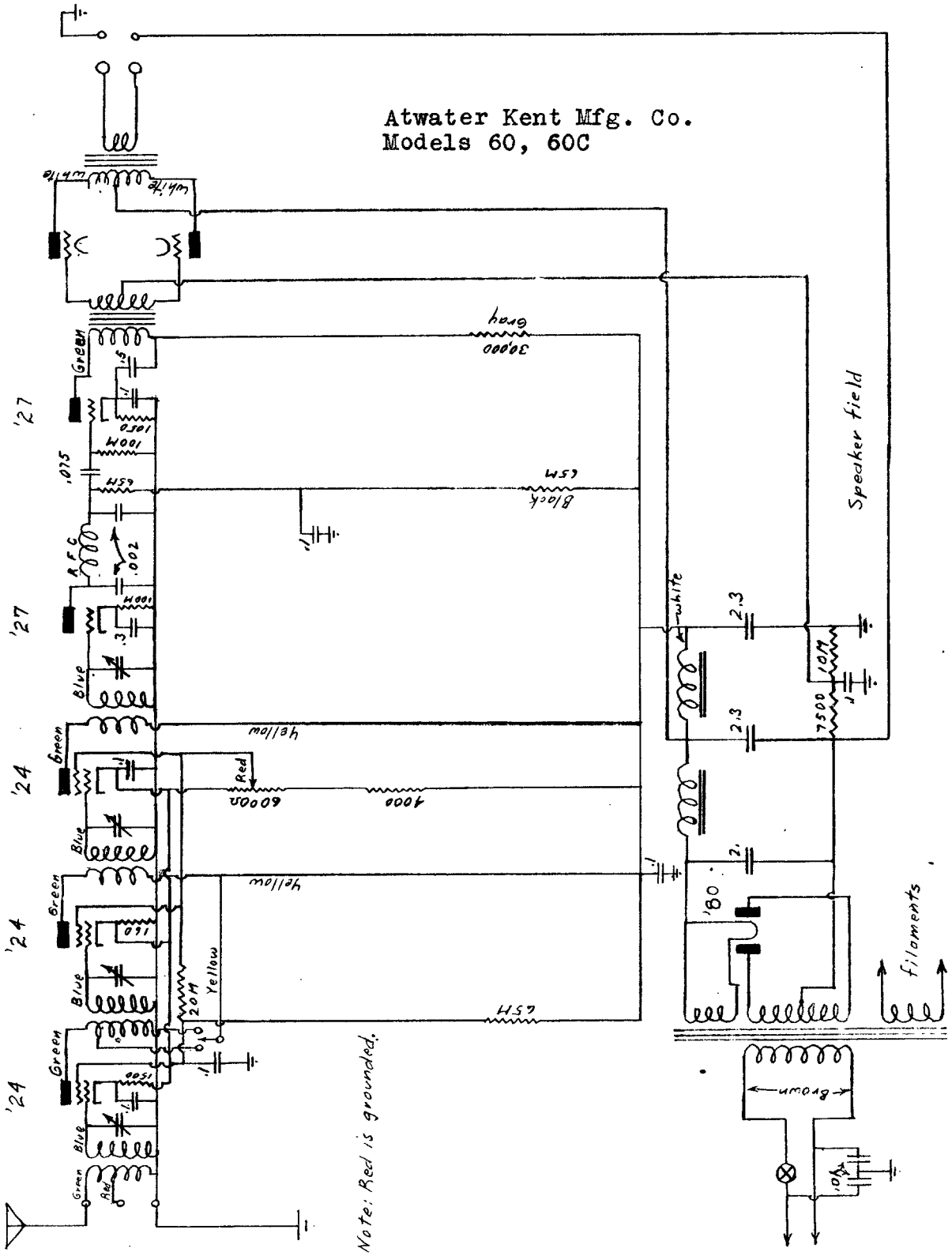
Atwater Kent Mfg. Co.
Models 60, 60C
Speaker field
Filaments
Note: Red is grounded.
'27
'27
'24
'24
'24
'80
White
Gray
Black
Yellow
Green
Blue
Red
30,000
65M
100M
.015
.002
R.F.C.
2.3
10M
7500
60000
4000
160
20M
150
.01

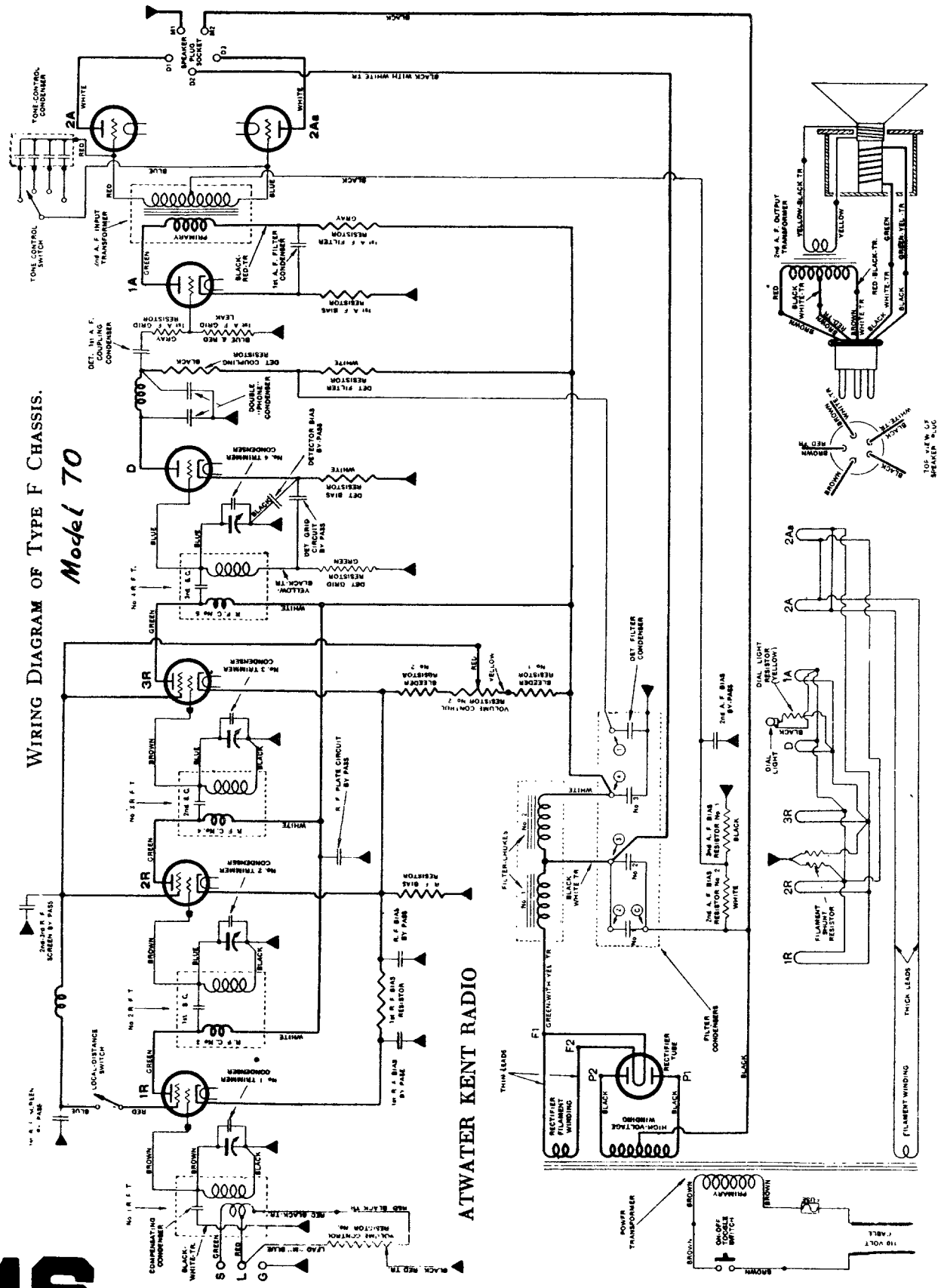
WIRING DIAGRAM OF TYPE F CHASSIS.
Model 70
ATWATER KENT RADIO
TONE-CONTROL CONDENSER
TONE-CONTROL SWITCH
2nd A. F. INPUT TRANSFORMER
1st A. F. FILTER CONDENSER
1st A. F. FILTER RESISTOR
1st A. F. BIAS RESISTOR
1st A. F. GRID LEAK
1st A. F. GRID RESISTOR
DET. 1st A. F. COUPLING CONDENSER
DET. COUPLING RESISTOR
DET. FILTER RESISTOR
DOUBLE 'PHONE CONDENSER
DETECTOR BIAS BY-PASS
No. 4 TRIMMER CONDENSER
DET. BIAS RESISTOR
DET. GRID CIRCUIT BY-PASS
DET. GRID RESISTOR
No. 3 TRIMMER CONDENSER
No. 2 TRIMMER CONDENSER
No. 1 TRIMMER CONDENSER
R. F. PLATE CIRCUIT BY-PASS
R. F. BIAS RESISTOR
R. F. BIAS BY-PASS
1st R. F. BIAS RESISTOR
1st R. F. BIAS BY-PASS
2nd R. F. SCREEN BY-PASS
1st R. F. SCREEN BY-PASS
LOCAL-DISTANCE SWITCH
COMPENSATING CONDENSER
VOLUME CONTROL RESISTOR No. 1
VOLUME CONTROL RESISTOR No. 2
BLEEDER RESISTOR No. 1
BLEEDER RESISTOR No. 2
DET. FILTER CONDENSER
2nd A. F. BIAS BY-PASS
2nd A. F. BIAS RESISTOR No. 1
2nd A. F. BIAS RESISTOR No. 2
FILTER CONDENSERS
FILTER CHOKES
RECTIFIER TUBE
RECTIFIER FILAMENT WINDING
HIGH-VOLTAGE WINDING
THIN LEADS
THICK LEADS
FILAMENT WINDING
DIAL LIGHT RESISTOR (YELLOW)
DIAL LIGHT
FILAMENT SHUNT RESISTOR
2nd A. F. OUTPUT TRANSFORMER
TOP VIEW OF SPEAKER PLUG
POWER TRANSFORMER
ON-OFF TOGGLE SWITCH
110 VOLT CABLE
PRIMARY
SPEAKER PLUG SOCKET

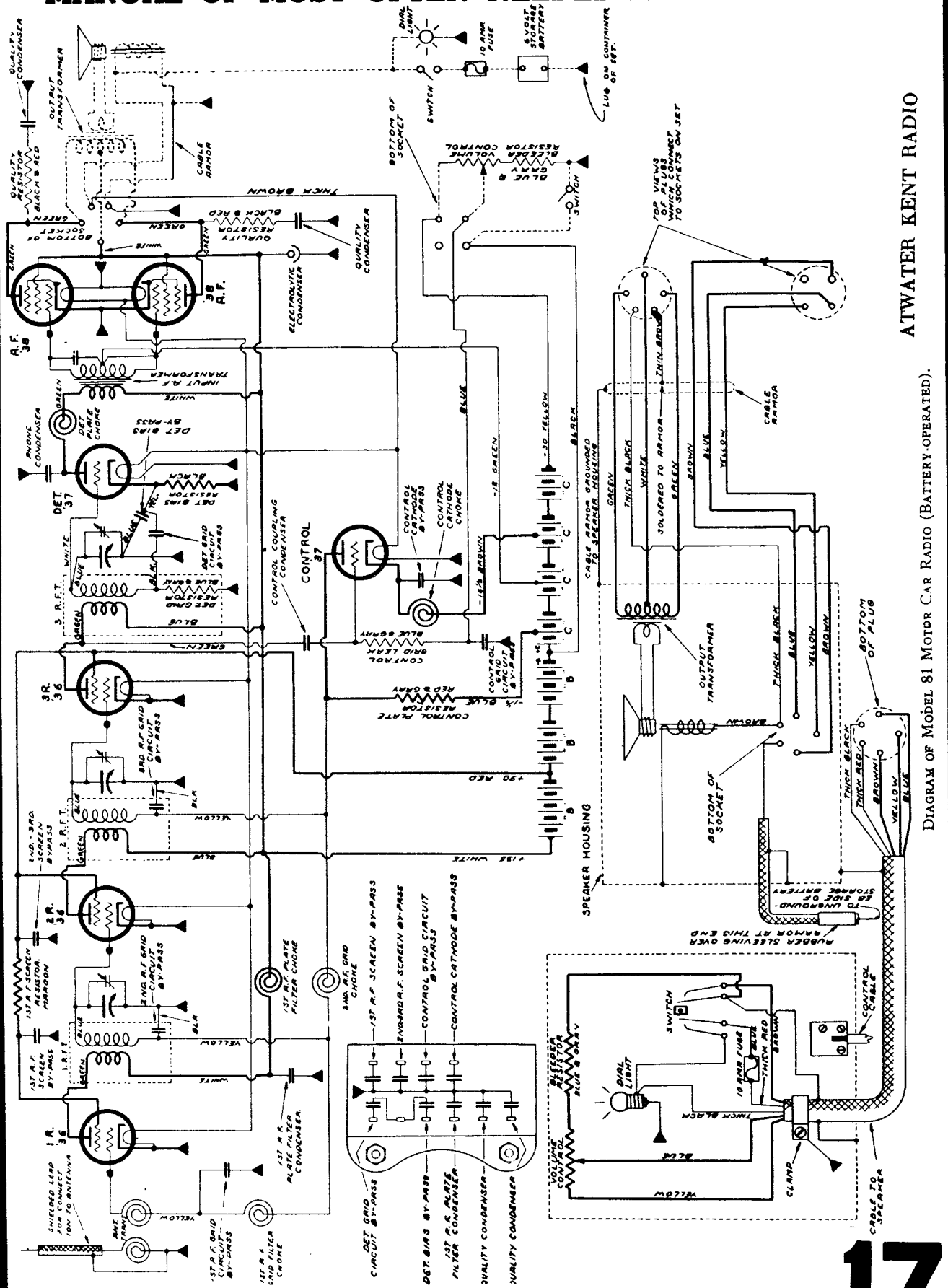
ATWATER KENT RADIO
DIAGRAM OF MODEL 81 MOTOR CAR RADIO (BATTERY-OPERATED).
A.F. 38
DET. 37
CONTROL 37
3 R.F.T.
3R. 36
2 R.F.T.
2R. 36
1 R.F.T.
1R. 36
SPEAKER HOUSING
OUTPUT TRANSFORMER
CABLE ARMOR
SWITCH
DIAL LIGHT
10 AMP FUSE
6 VOLT STORAGE BATTERY
CLAMP
CONTROL CABLE
CABLE TO SPEAKER
BOTTOM OF SOCKET
BOTTOM OF PLUG
TOP VIEWS OF PLUGS WHICH CONNECT TO SOCKETS ON SET
SOLDERED TO ARMOR
CABLE ARMOR GROUNDED TO SPEAKER HOUSING
RUBBER SLEEVING OVER ARMOR AT THIS END
TO UNGROUND-ED SIDE OF STORAGE BATTERY
VOLUME CONTROL RESISTOR
RESISTOR BLUE & GRAY
QUALITY CONDENSER
QUALITY RESISTOR BLACK & RED
ELECTROLYTIC CONDENSER
PHONE CONDENSER
DET. PLATE CHOKE
DET. BIAS BY-PASS
DET. BIAS RESISTOR
DET. GRID CIRCUIT BY-PASS
DET. GRID RESISTOR
CONTROL COUPLING CONDENSER
CONTROL CATHODE BY-PASS
CONTROL CATHODE CHOKE
CONTROL GRID LEAK
CONTROL PLATE RESISTOR
CONTROL GRID CIRCUIT BY-PASS
3RD R.F. GRID CIRCUIT BY-PASS
2ND R.F. GRID CIRCUIT BY-PASS
2ND.-3RD SCREEN BY-PASS
1ST R.F. SCREEN RESISTOR
1ST R.F. SCREEN BY-PASS
1ST R.F. PLATE FILTER CHOKE
2ND. R.F. GRID CHOKE
1ST R.F. PLATE FILTER CONDENSER
1ST R.F. GRID CIRCUIT BY-PASS
1ST R.F. GRID FILTER CHOKE
SHIELDED LEAD FOR CONNECT ION TO ANTENNA
ANT. TRANS.
1ST R.F. SCREEN BY-PASS
2ND-3RD R.F. SCREEN BY-PASS
CONTROL GRID CIRCUIT BY-PASS
CONTROL CATHODE BY-PASS
DET. GRID CIRCUIT BY-PASS
DET. BIAS BY-PASS
1ST R.F. PLATE FILTER CONDENSER
QUALITY CONDENSER
QUALITY CONDENSER
+90 RED
+135 WHITE
-30 YELLOW
-18 GREEN
-16½ BROWN
-1½ BLUE
THICK BROWN
THICK BLACK
THICK RED
BROWN
YELLOW
BLUE
WHITE
GREEN
BLACK

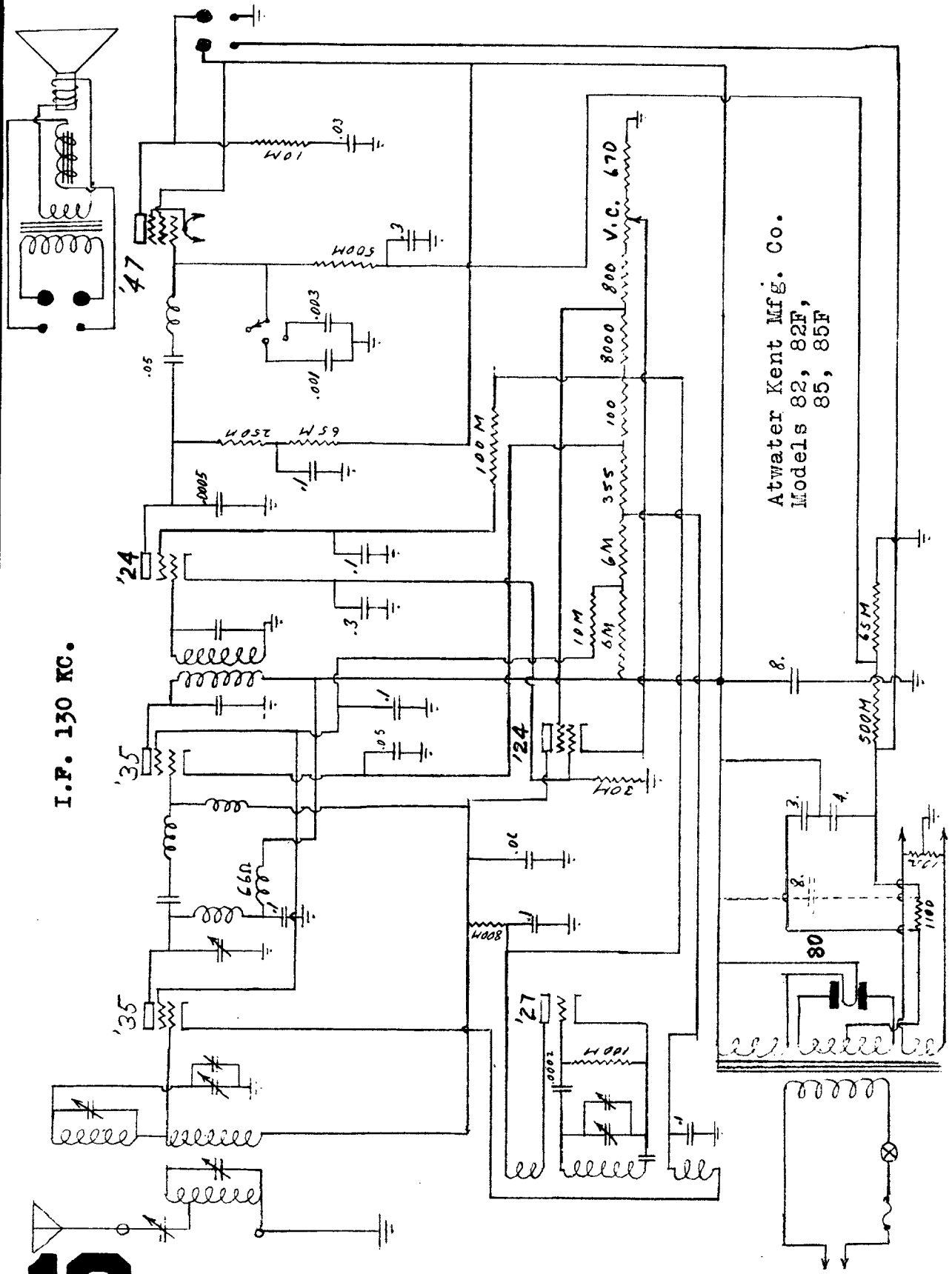
Atwater Kent Mfg. Co.
Models 82, 82F,
85, 85F
I.F. 130 KC.
'47
'24
'35
'24
'35
'27
80
V.C. 670
800
8000
100
355
6M
10M
6M
100M
65M
500M
W01
W005
W052
W59
W08
W008
W001
U99
.03
.05
.003
.001
.0005
.1
.3
.05
.01
.1
.1
8.
3.
4.
1100
1000

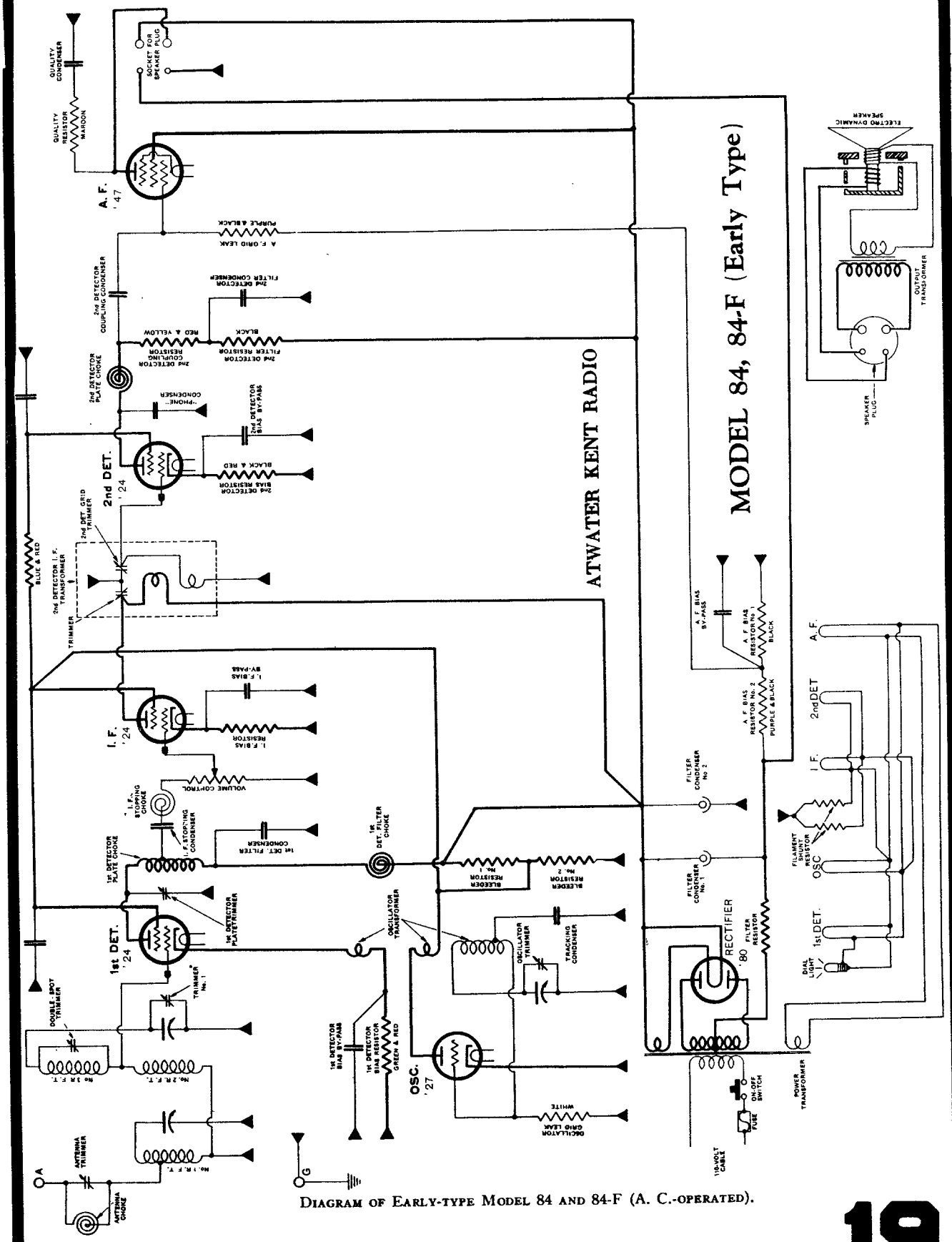

DIAGRAM OF EARLY-TYPE MODEL 84 AND 84-F (A. C.-OPERATED).

ATWATER KENT RADIO

MODEL 84, 84-F (Late Type)

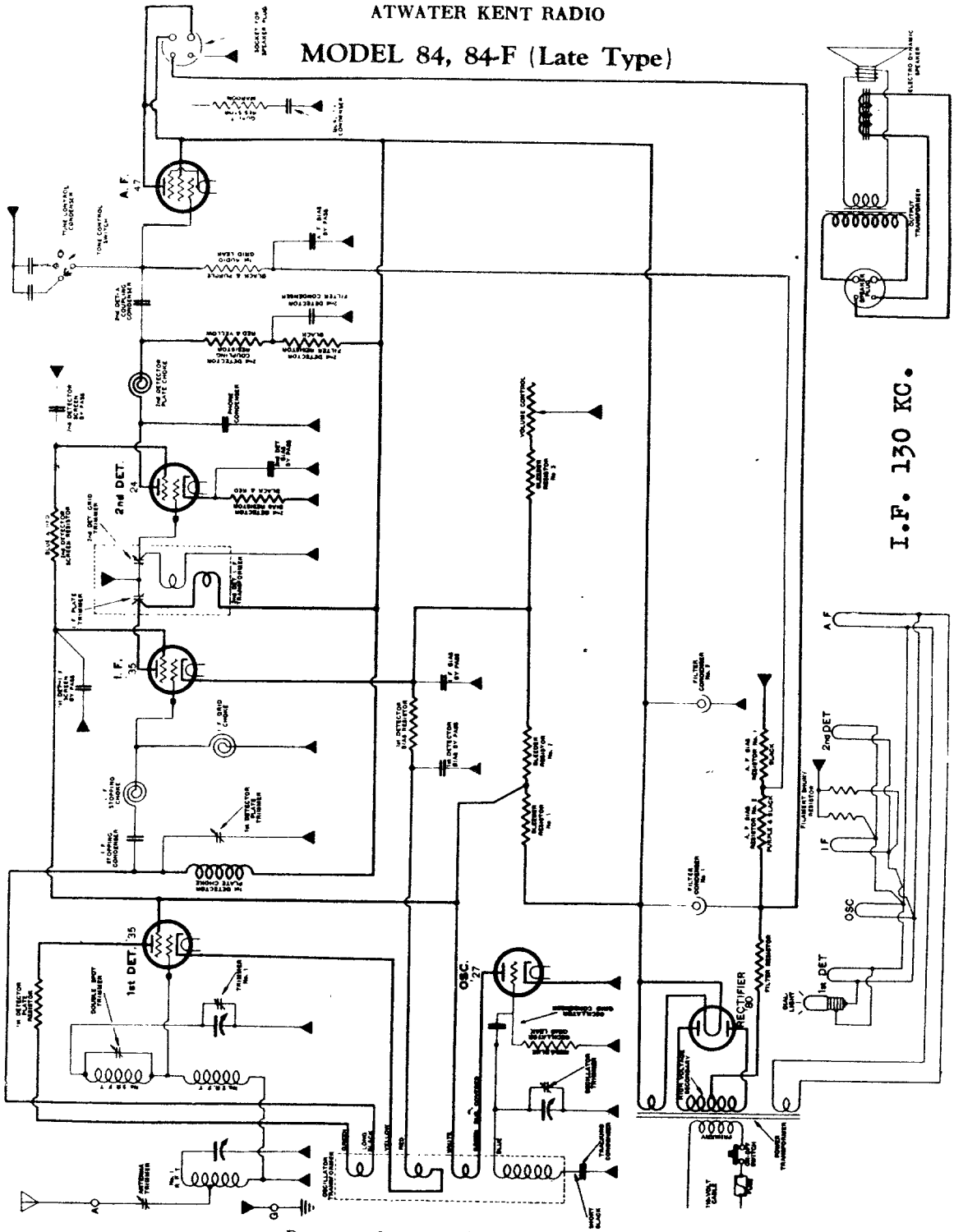

DIAGRAM OF LATE-TYPE MODEL 84 AND 84-F (A. C.-OPERATED).

A few late-type Model 84 and 84-F receivers have slightly different oscillator transformers, as explained in the notes accompanying the parts list for these sets.
The filter resistor shown in the above diagram is NOT used in Model 84-F.
This set has a 1st-detector plate filter choke and condenser not shown in the diagram.

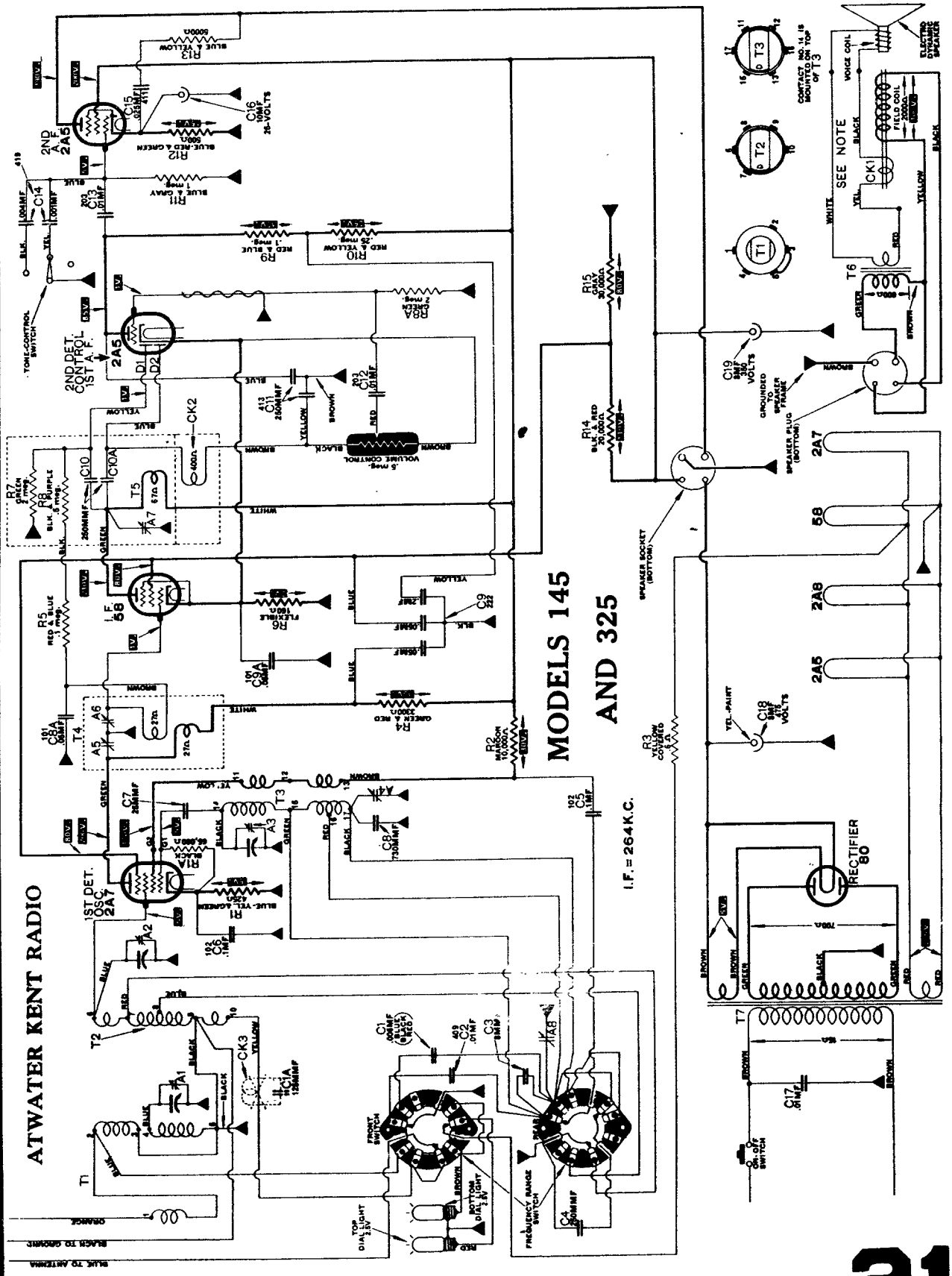
ATWATER KENT RADIO
MODELS 145
AND 325
I.F. = 264 K.C.
SEE NOTE
2ND A.F. 2A5
2ND DET. CONTROL 1ST A.F. 2A5
I.F. 58
1ST DET. OSC. 2A7
RECTIFIER 80
2A7
58
2A8
2A5
TONE CONTROL SWITCH
VOLUME CONTROL
SPEAKER SOCKET (BOTTOM)
SPEAKER PLUG (BOTTOM)
GROUNDED TO SPEAKER FRAME
ELECTRO DYNAMIC SPEAKER
VOICE COIL
FIELD COIL
CONTACT NO. 14-15 MOUNTED ON TOP OF T3
FRONT SWITCH
REAR SWITCH
FREQUENCY RANGE SWITCH
TOP DIAL LIGHT
BOTTOM DIAL LIGHT
ON-OFF SWITCH
BLACK TO GROUND
BLUE TO ANTENNA

ATWATER KENT RADIO

MODEL 155, 1st TYPE, Below Serial No. 7086900

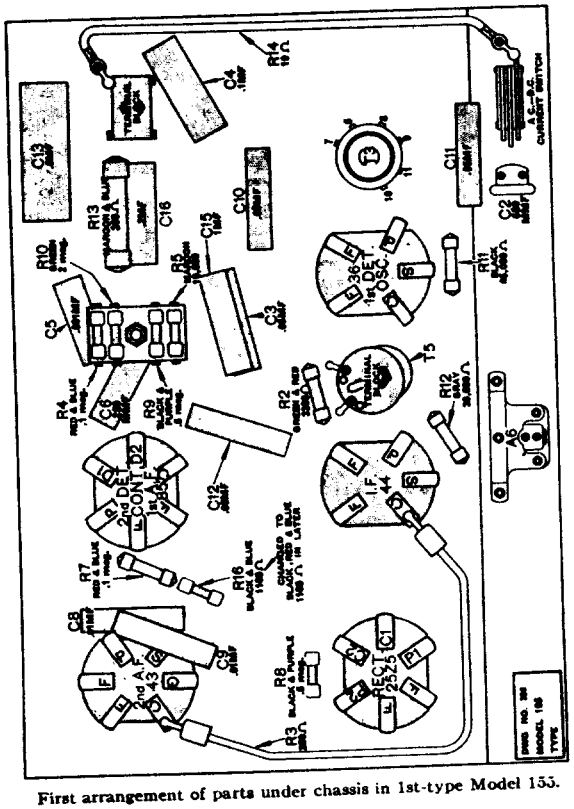

First arrangement of parts under chassis in 1st-type Model 155.

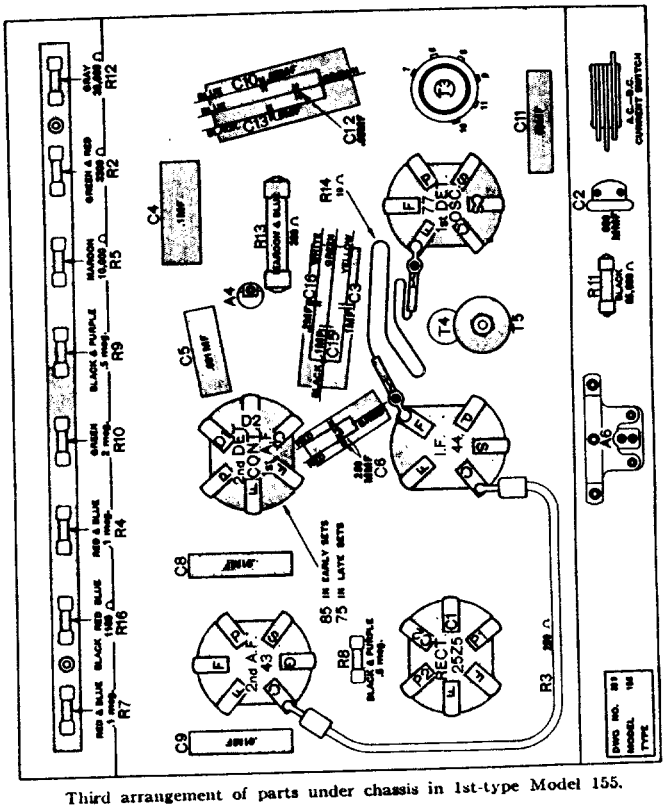

Third arrangement of parts under chassis in 1st-type Model 155.

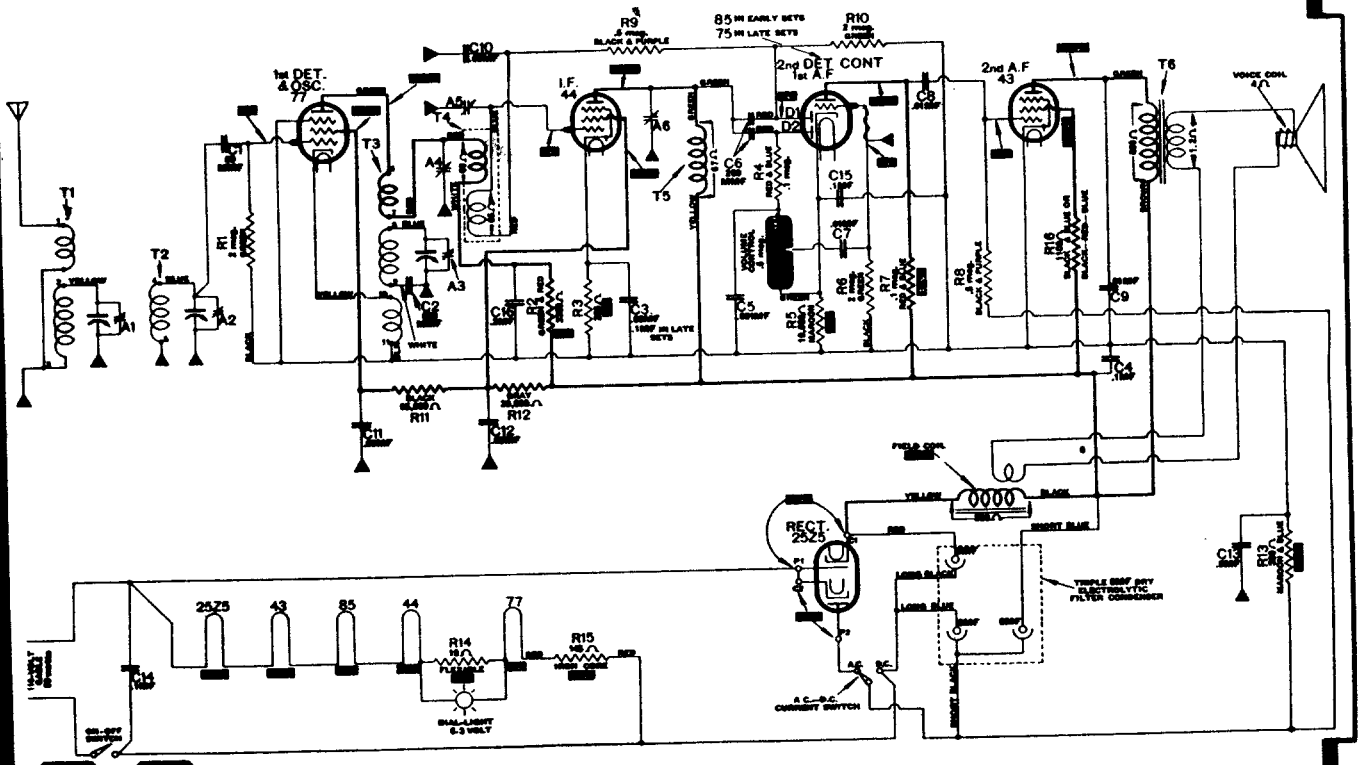

MODEL 165 DIAGRAM

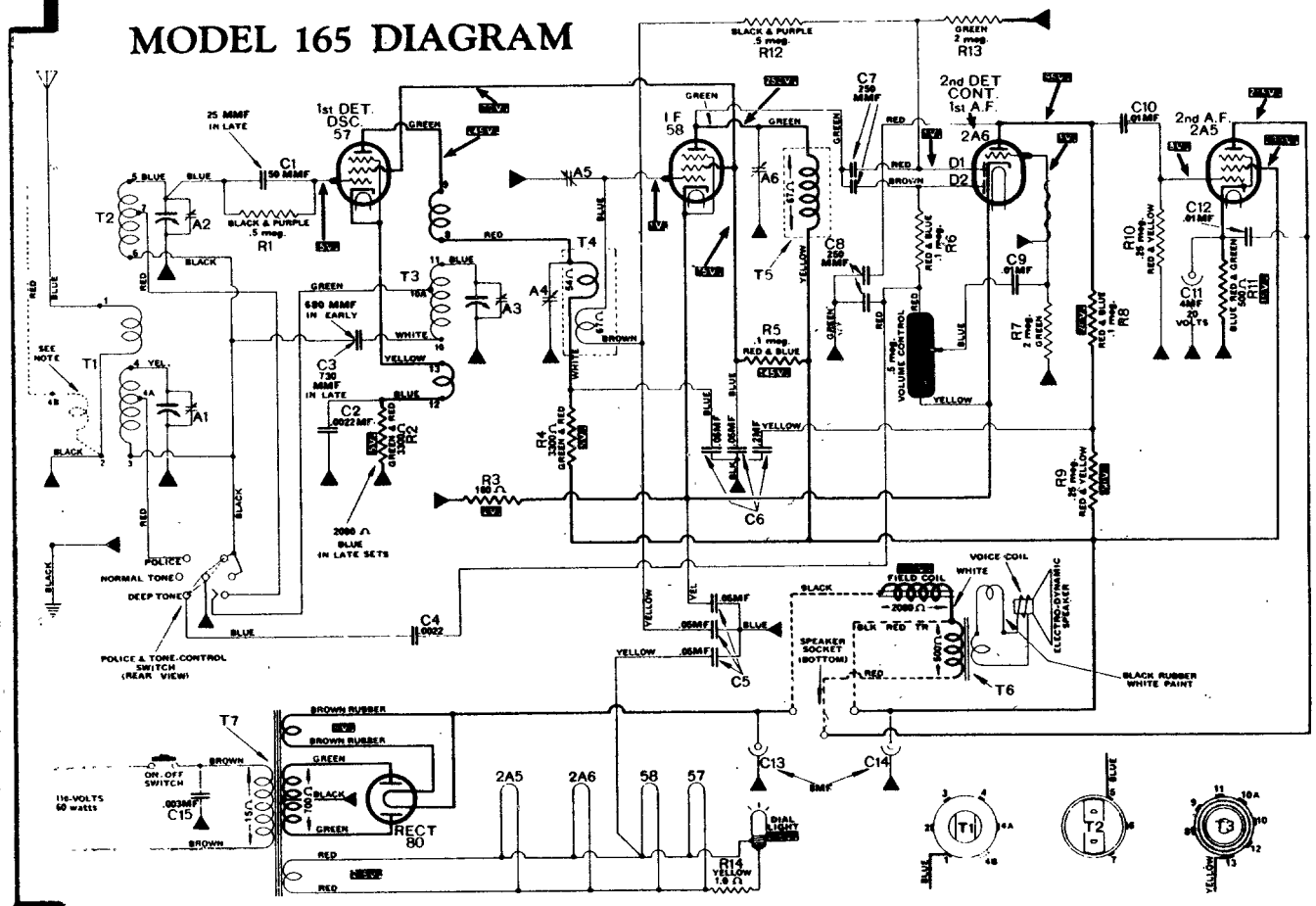

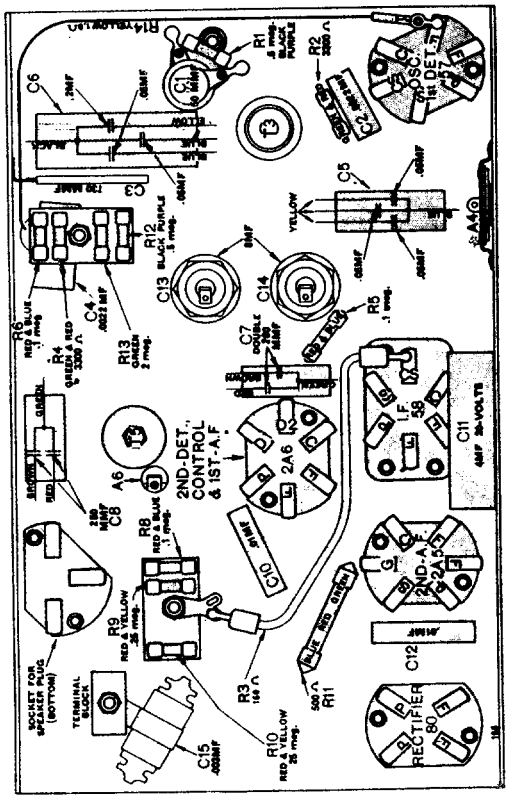

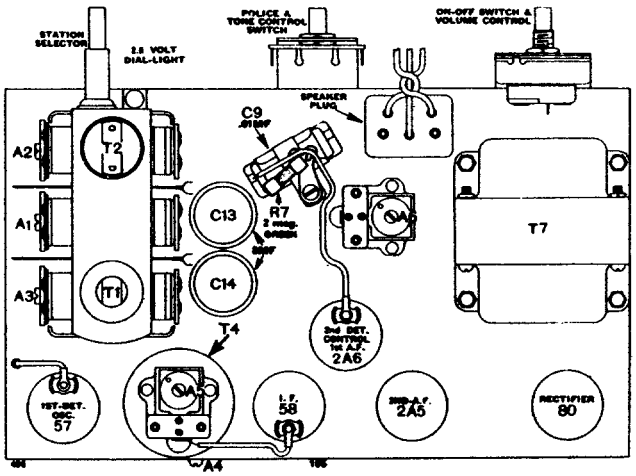

In late type 165, the 1st-detector bias resistor R2 is 2000 ohms, ½ watt (blue).

In a few early 165 sets, the tracking condenser C3 is 680MMF.

In late sets, C1 is 25MMF instead of 50MMF.

The additional primary, shown in dotted lines on No. I R.F.T., is used in some 165 sets.

I.F. 262.5 KC.

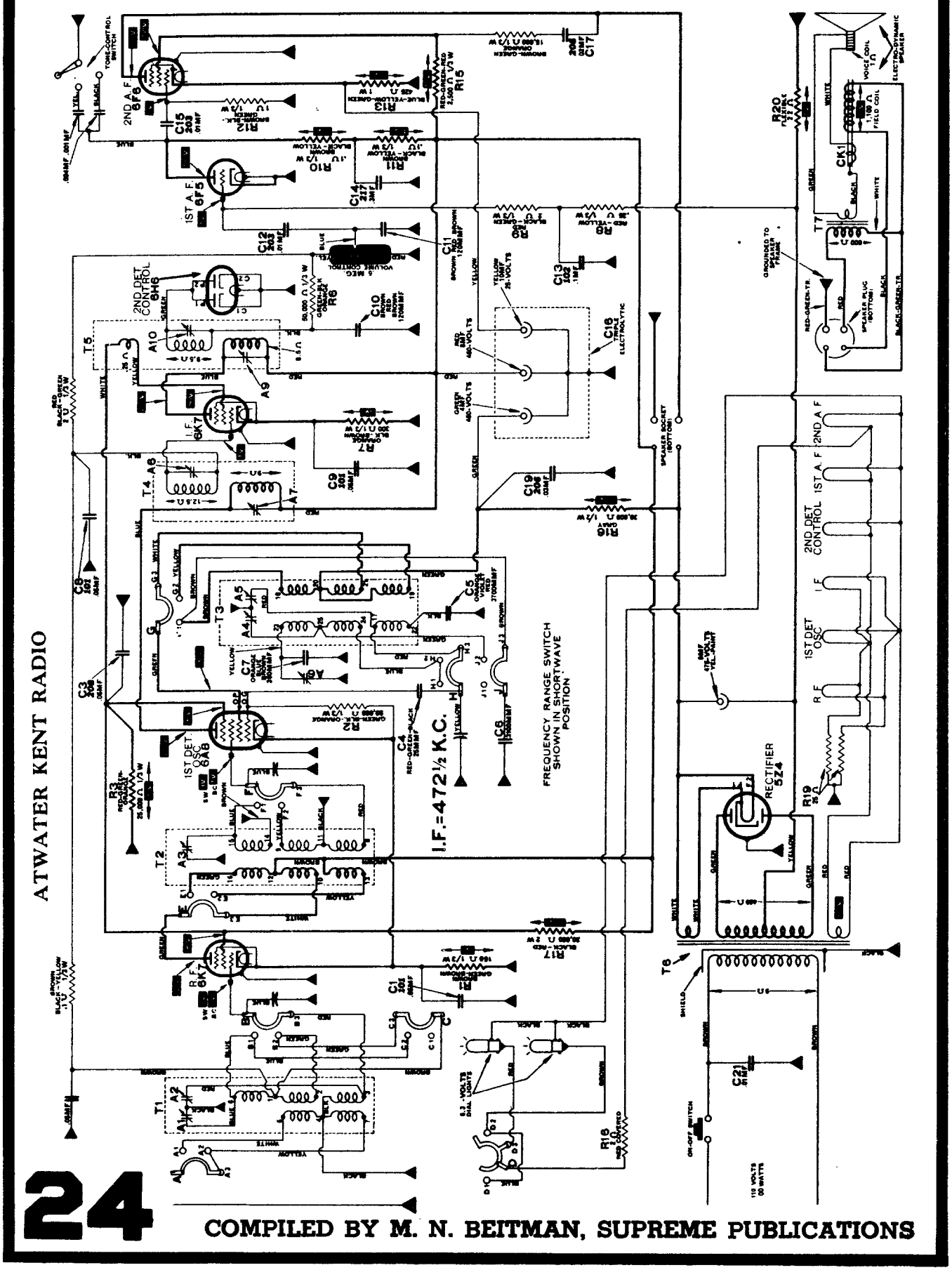
ATWATER KENT RADIO
I.F.=472½ K.C.
FREQUENCY RANGE SWITCH SHOWN IN SHORTWAVE POSITION
2ND A.F. 6F6
1ST A.F. 6F5
2ND DET CONTROL 6H6
I.F. 6K7
1ST DET OSC 6A8
R.F. 6K7
RECTIFIER 5Z4
2ND A.F.
1ST A.F.
2ND DET CONTROL
I.F.
1ST DET OSC
R.F.
T1
T2
T3
T4
T5
T6
T7
CK1
ELECTRO-DYNAMIC SPEAKER
VOICE COIL
FIELD COIL
SPEAKER PLUG (BOTTOM)
SPEAKER SOCKET (BOTTOM)
TONE-CONTROL SWITCH
VOLUME CONTROL
ON-OFF SWITCH
110 VOLTS 60 WATTS
6.3-VOLTS DIAL LIGHTS
SHIELD

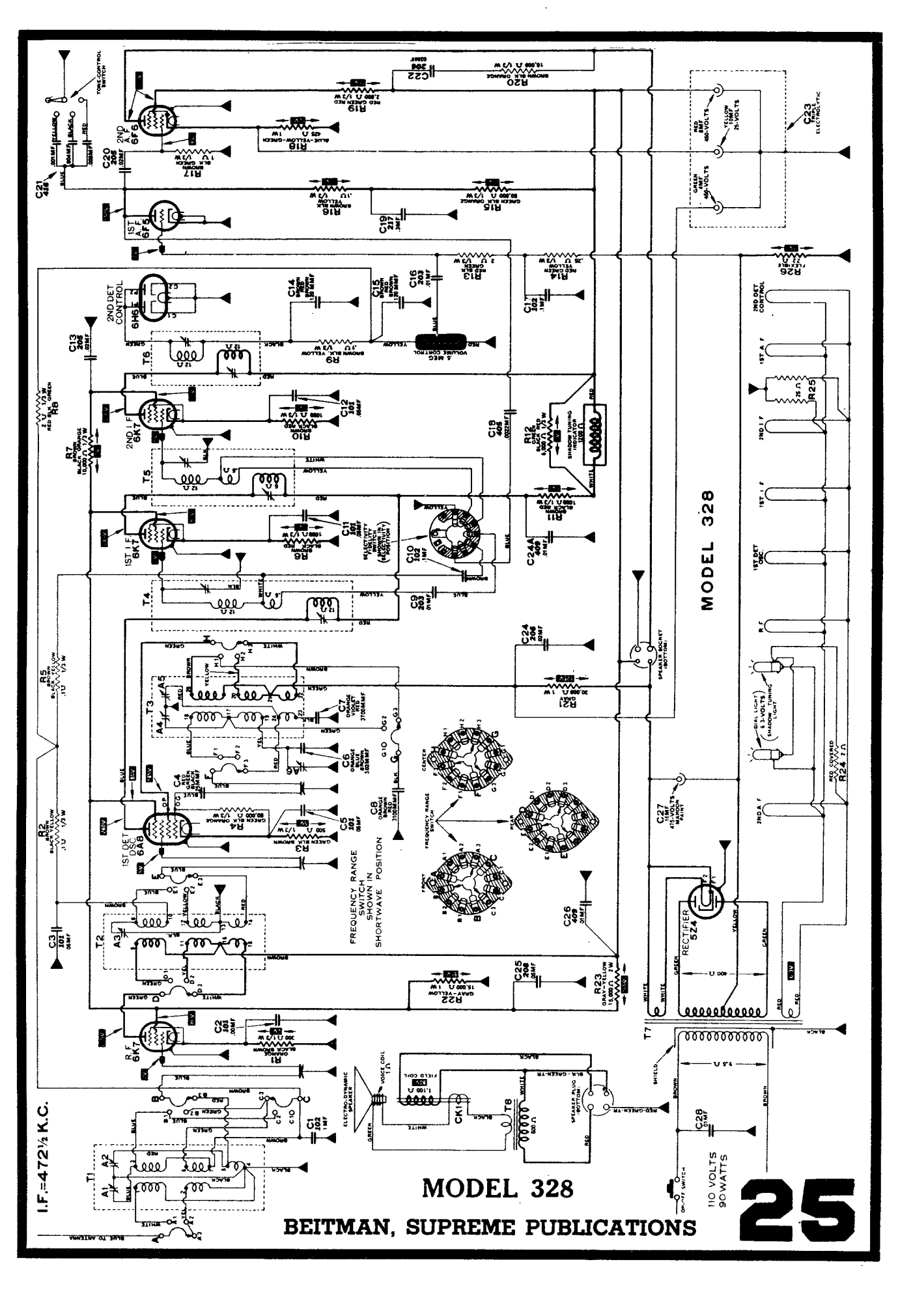

MODEL 328

BEITMAN, SUPREME PUBLICATIONS

25

ATWATER KENT RADIO

MODELS 856 AND 976

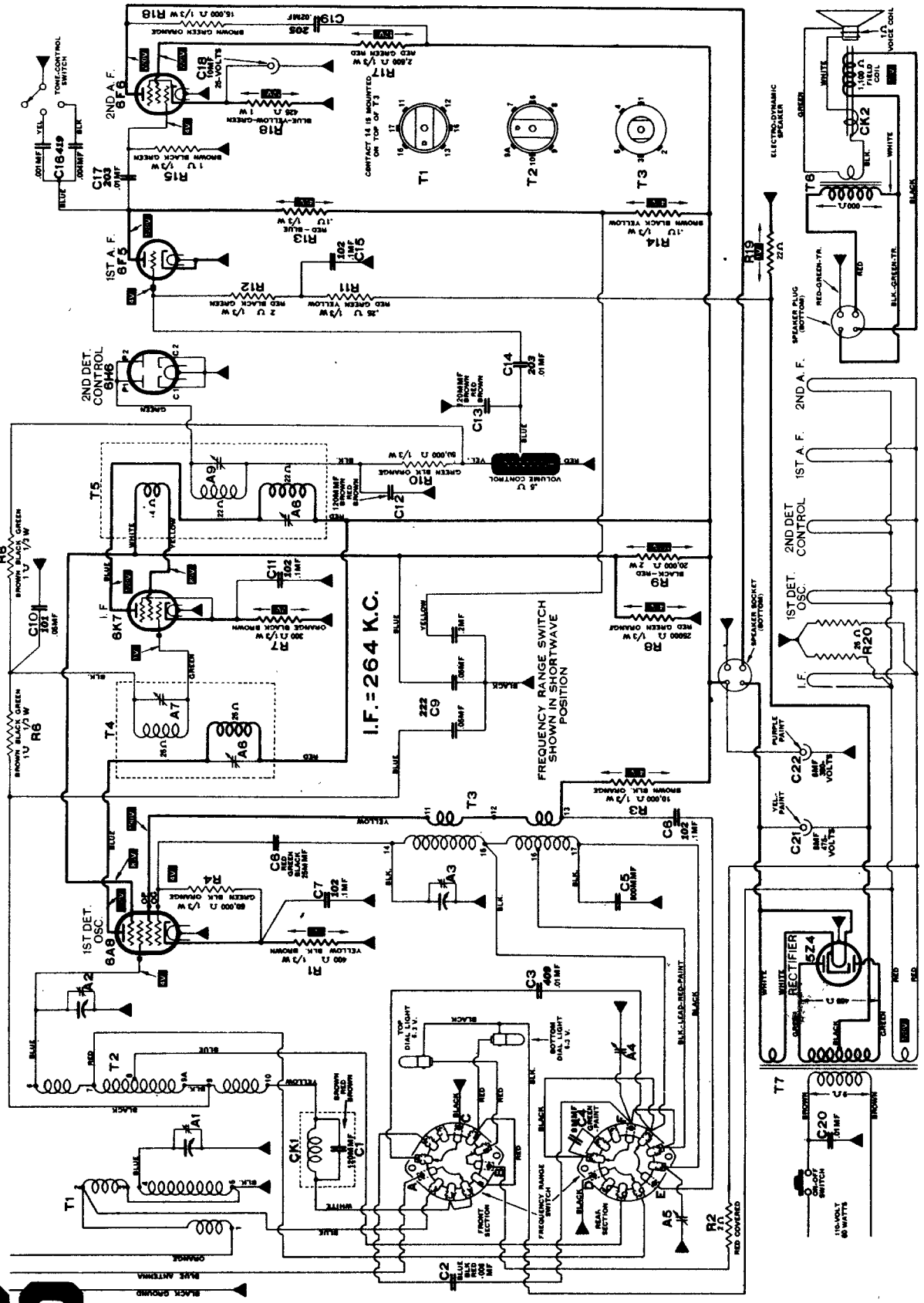

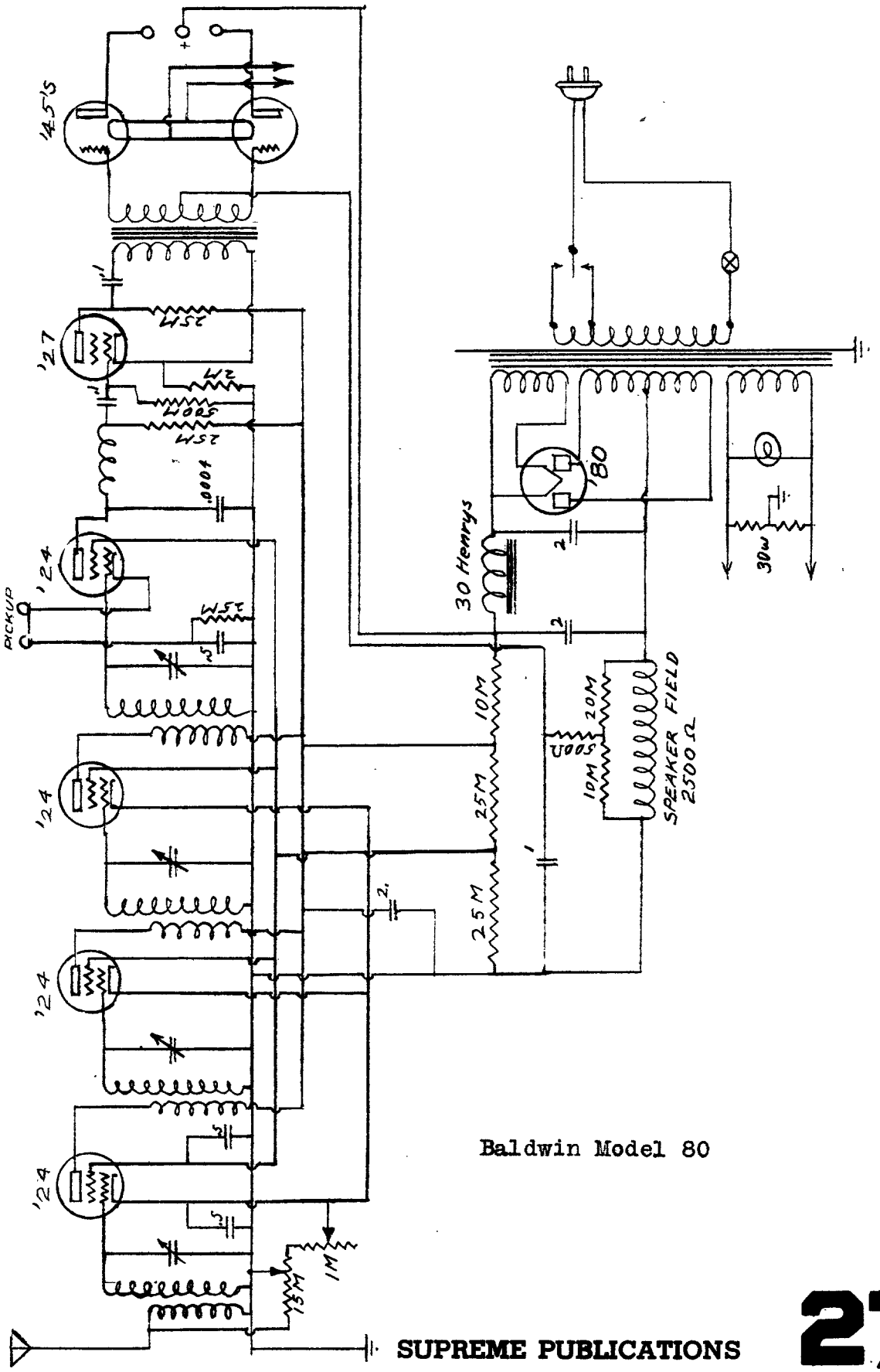

Baldwin Model 80

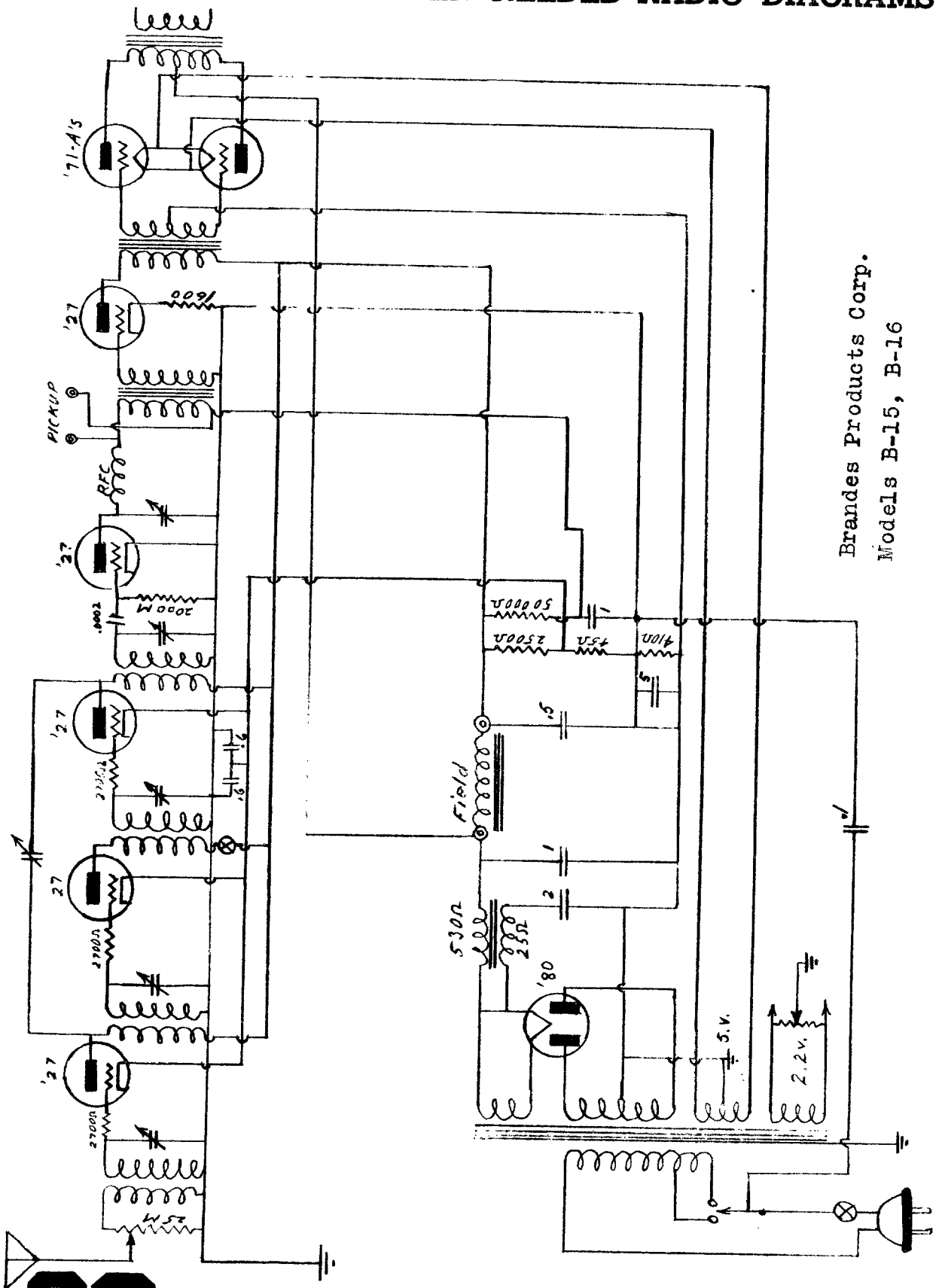

Brandes Products Corp.
Models B-15, B-16

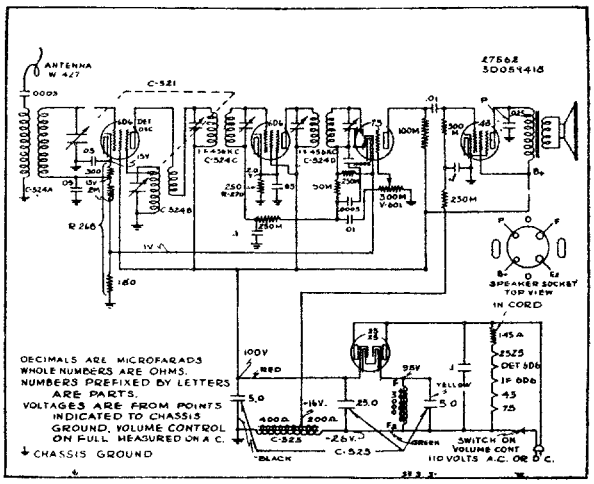

Schematic circuit diagram Model 525 AC-DC Superheterodyne, with automatic volume control

Should it be necessary, at any time, to rebalance this set the procedure is as follows: Attach a 456 kilocycle oscillator to the grid of the 6D6 tube in back of the variable condenser and adjust the trimming condensers of the I. F. transformers to maximum deflection on an output meter connected across the primary of the speaker input transformer. While adjusting these trimmers, the variable condenser should be at the maximum capacity position—at the extreme right of its rotation.

Next disconnect the antenna wire and connect an oscillator in series with a 75 mmf. condenser to the antenna coil. Rotate the condenser plates to the minimum capacity position—extreme left turn, and adjust the trimmer condenser of the rear section of the variable condenser to resonance with an oscillator set at 1725 kilocycles, then adjust the condenser of the front section of the variable condenser to resonance. Align at 1400—1200—1000—800—600—550 kilocycles. Bend slotted plates of variable condenser if necessary.

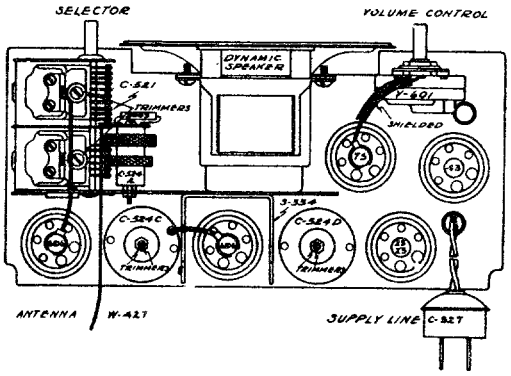

Belmont Radio Corp.

MODEL 525

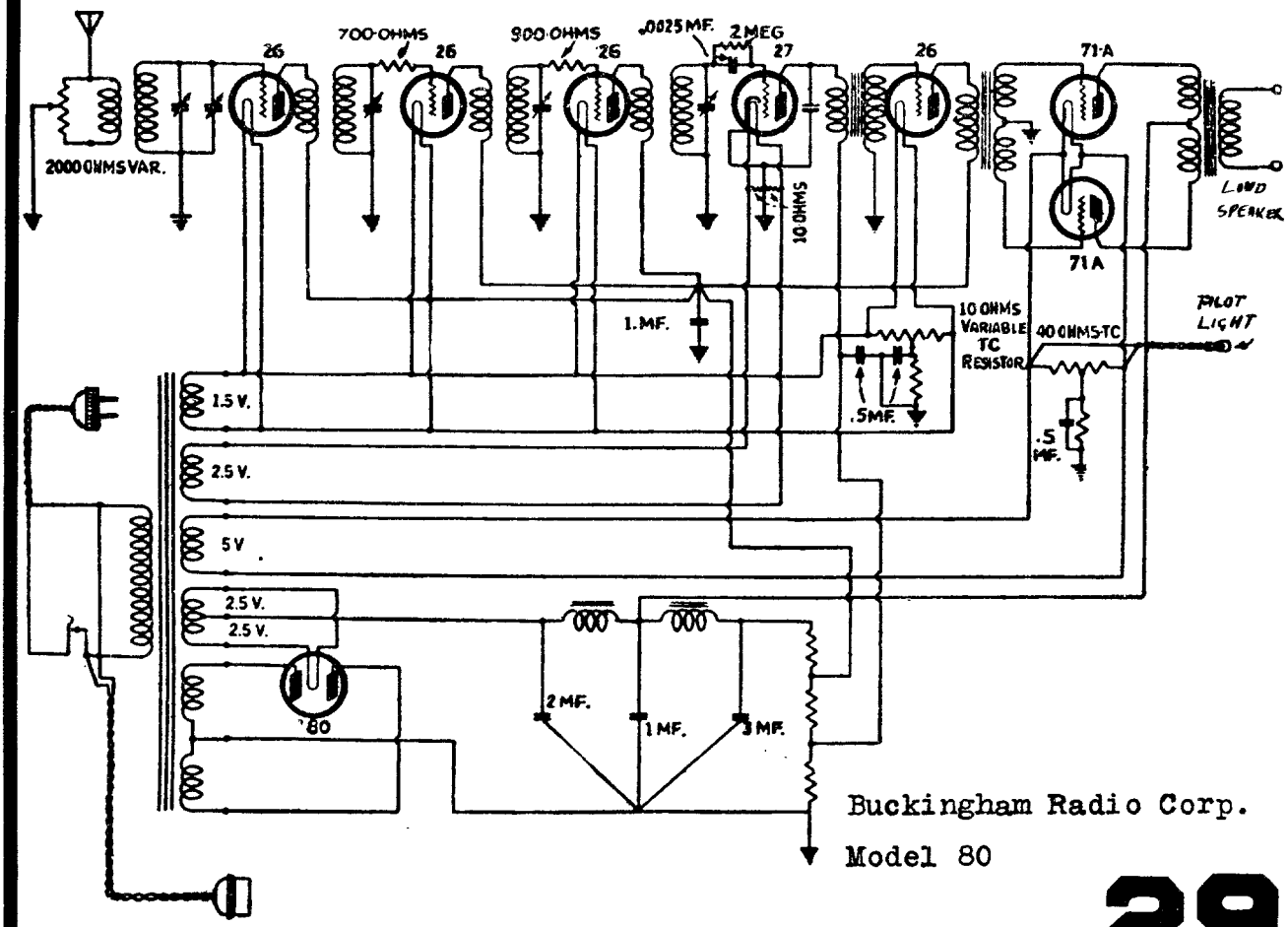

Buckingham Radio Corp.

Model 80

MANUAL OF MOST-OFTEN-NEEDED RADIO DIAGRAMS

MODELS 30S, 31S, 33S, 34S.

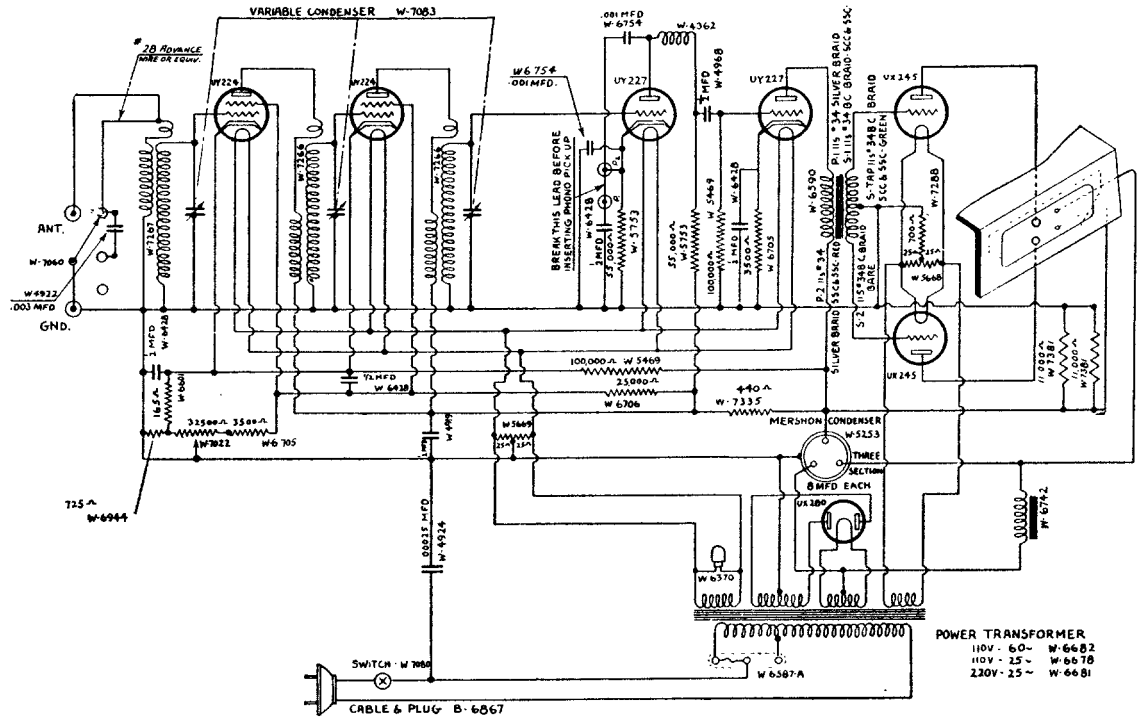

Crosley Corp., Cincinnati, Ohio

Models 40S, 41S, 42S, 82S

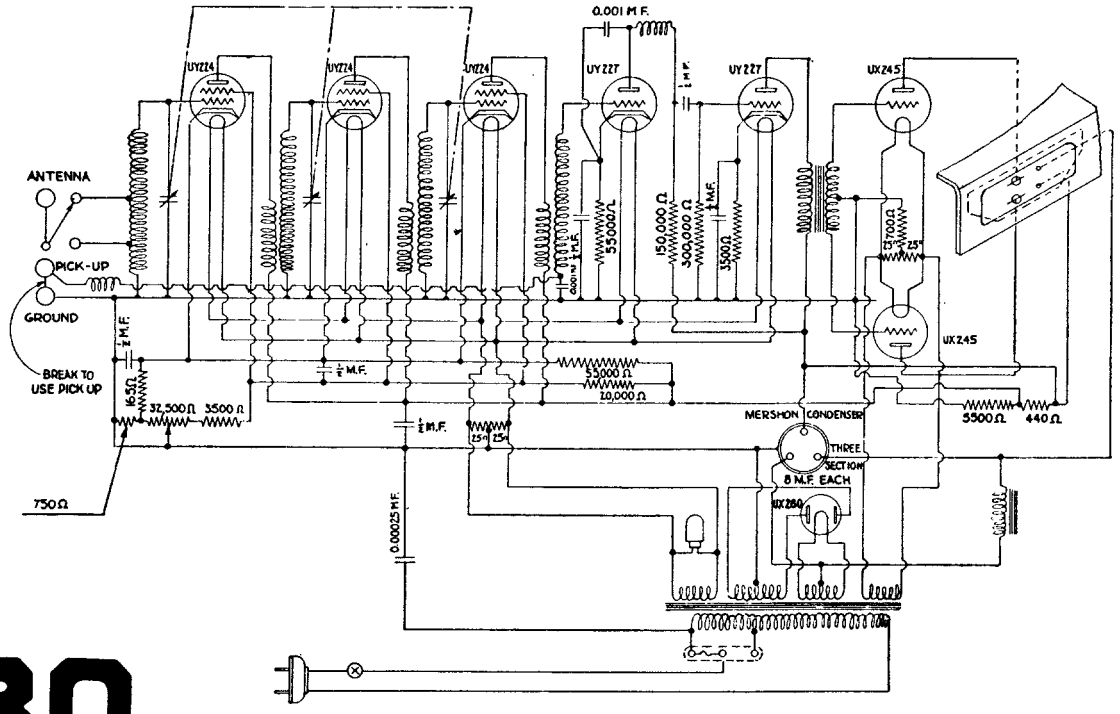

30

COMPILED BY M. N. BEITMAN, SUPREME PUBLICATIONS

Wiring Diagram For Model 5B3

The Crosley Corp.

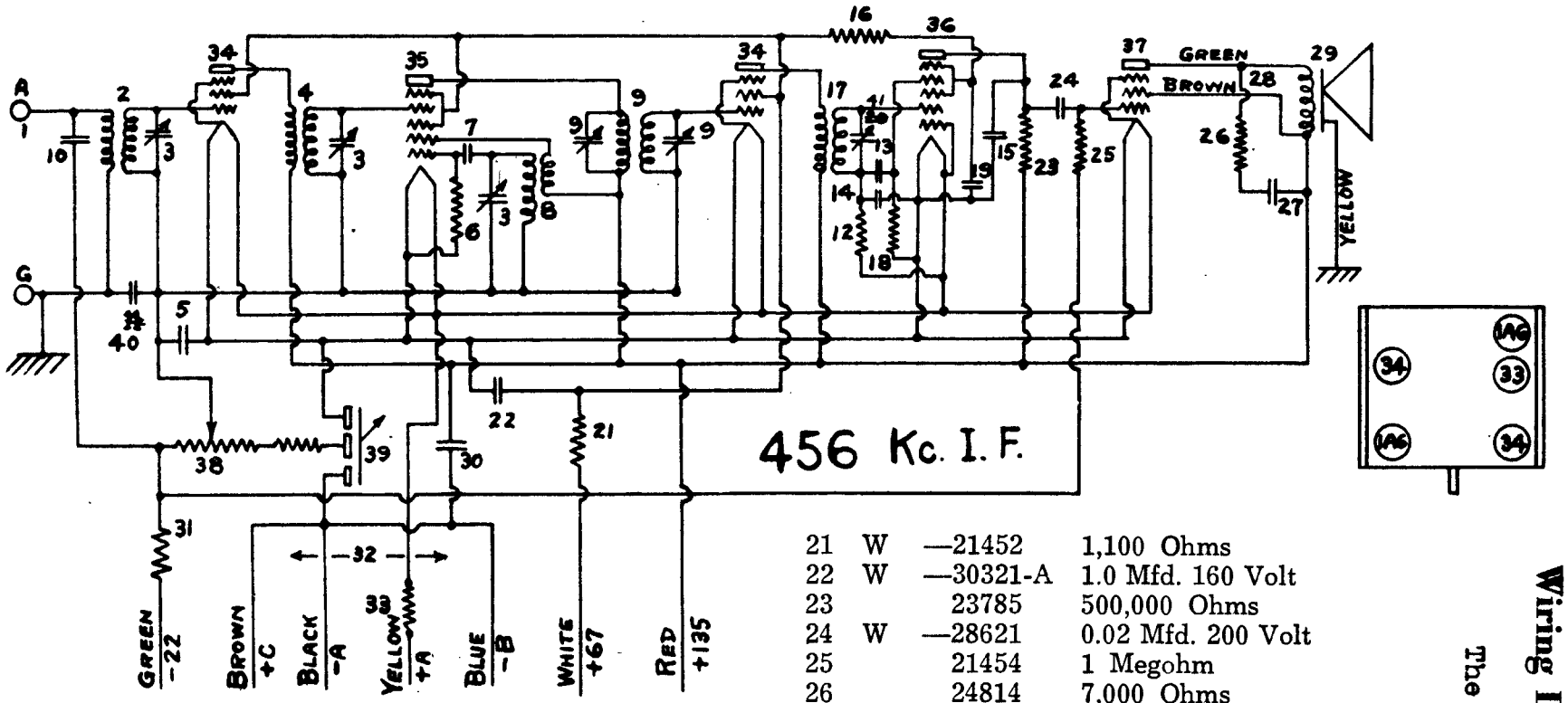

4	G17	—32001	R. F. Transformer
5	W	—24049-B	0.1 Mfd. 200 Volt
6		21875	100,000 Ohms
7	G1	—34004	.025 Mfd. (Mica)
8	G9	—32002	Oscillator Coil
9	G9	—32004	1st I. F. Trans.
10	W	—28621	.02 Mfd. 200 Volt
12		23785	500,000 Ohms
13	W	—28621	.02 Mfd. 200 Volt
14	W	—26152-A	.00015 Mfd. 400 Volt
15			.0001 Mfd. 400 Volt
16		21237-A	60,000 Ohms
17	G13	—32004	2nd I. F. Trans.
18		21454	1 Megohm
19	W	—24049-B	0.1 Mfd. 200 Volt
21	W	—21452	1,100 Ohms
22	W	—30321-A	1.0 Mfd. 160 Volt
23		23785	500,000 Ohms
24	W	—28621	0.02 Mfd. 200 Volt
25		21454	1 Megohm
26		24814	7,000 Ohms
27	W	—28619	.006 Mfd.
28	W	—27933	Speaker Cable
29		30418	336-3B Speaker
30	W	—29910-A	0.25 Mfd. 200 Volt
31		27121	5,000 Ohms
32	G2	—29237	Battery Cable
33	G2	—23300	Air Cell Resistor .53 Ohms
34	G31	—27975	34 Socket
35	G55	—27975	1A6 Socket
36	G4	—33070	1A6 Flex. Socket
37	G36	—27975	33 Socket
38	W	—32649	Volume Cont. 10,000 Ohms
39			Switch 3. P. S. T.
40	W	—24049-B	0.1 Mfd. 200 Volt

Figures in first column correspond to figures in diagram

1	G15-24995	ANTENNA COIL
2	G20-24996	OSCILLATOR COIL
3	D-28592E	GANG CONDENSER
4	G7-25444	1st I.F. TRANS.
5	G8-25948A	1st I.F. TUNING COND.
6		I.F. SEC. TUNING COND.
7	G9-25445	2nd I.F. TRANS.
8	G9-25948	2nd I.F. TUNING COND.
9	26577	3 MEG.
10	28588	2700 Ω
11	W-28589	350 Ω
12	W-22514	750 Ω
13	W-29597	0.85 Ω
14	W-27088A	CORD & PLUG
15	G1-28859	POWER SUPPLY FIL. CHOKE
16	W-29264A	16 MFD. 125V. D.C.
17		16 MFD. 100V. D.C.
18		8 MFD. 10V. D.C.
19	G39-28807	78 SOCKET
20	G49-28807	6A7 SOCKET
21	G15-28807	38 SOCKET
22	G50-28807	1223 SOCKET
23	W-28594A	VOLUME CONTROL
24		S.P.S.T. SWITCH
25	W-28620	0.003 MFD. 200V.
26	W-28623	0.02 MFD. 200V.
27		0.02 MFD. 200V.
28	W-29271	0.02 MFD. 400V.
29		0.02 MFD. 400V.
30	W-29265	0.008 MFD. 200V.
31		0.05 MFD. 200V.
32	W29266A	0.03 MFD. 400V.
33		0.002 MFD. 400V.
34	26578	5 MEG.
35	29319	3½-2m SPEAKER
36	W-28959A	D.P.S.T. SWITCH
37	22159A	25,000 Ω
38	W-4099A	6.3V. DIAL LIGHT
39	W-29597A	244 Ω
40		26.7 Ω
41		
42		
43		
44		
45		

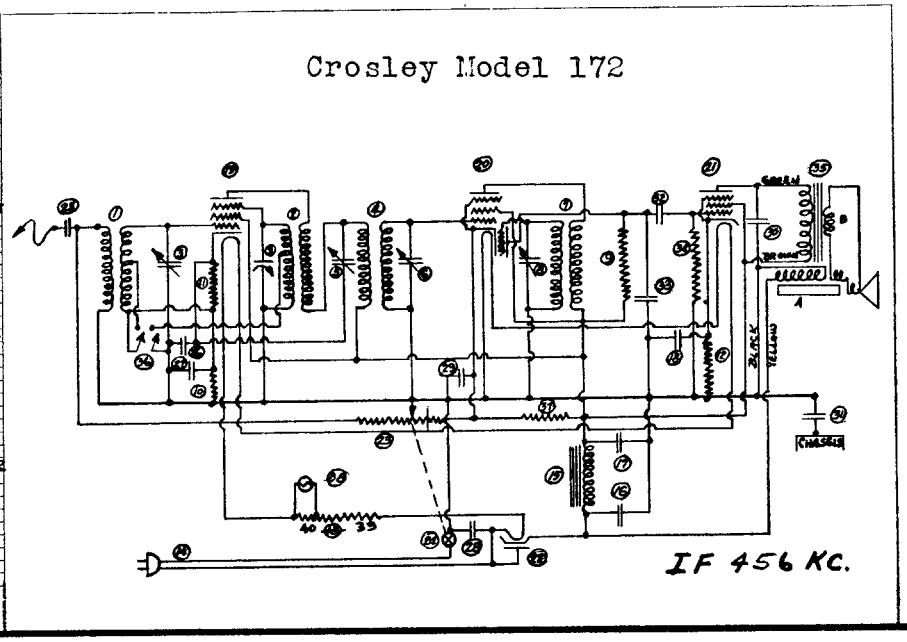

Control Grid Voltages

Pentode ..0.5 to 1.5
I. F. .....1.5 to 2.5 (20-30 vol. cont. off)
1st Det. ..5.5 to 7.5
2nd Det. ..4.0 to 6.0

Filament Voltages

All tubes but rectifier .....2.3 to 2.5
Rectifier tube .....4.6 to 5.0

Screen Grid Voltages

Pentode ..200 to 230
I. F. ..... 75 to 95
1st Det. .. 75 to 95
2nd Det. 15 to 25 (250V scale), 3-8 (50V scale)

Plate Voltages

Pentode 200 to 230
I. F. .....200 to 230
1st Det. ..160 to 180
2nd Det. 75 to 90 (250V scale), 20-30 (50V scale)

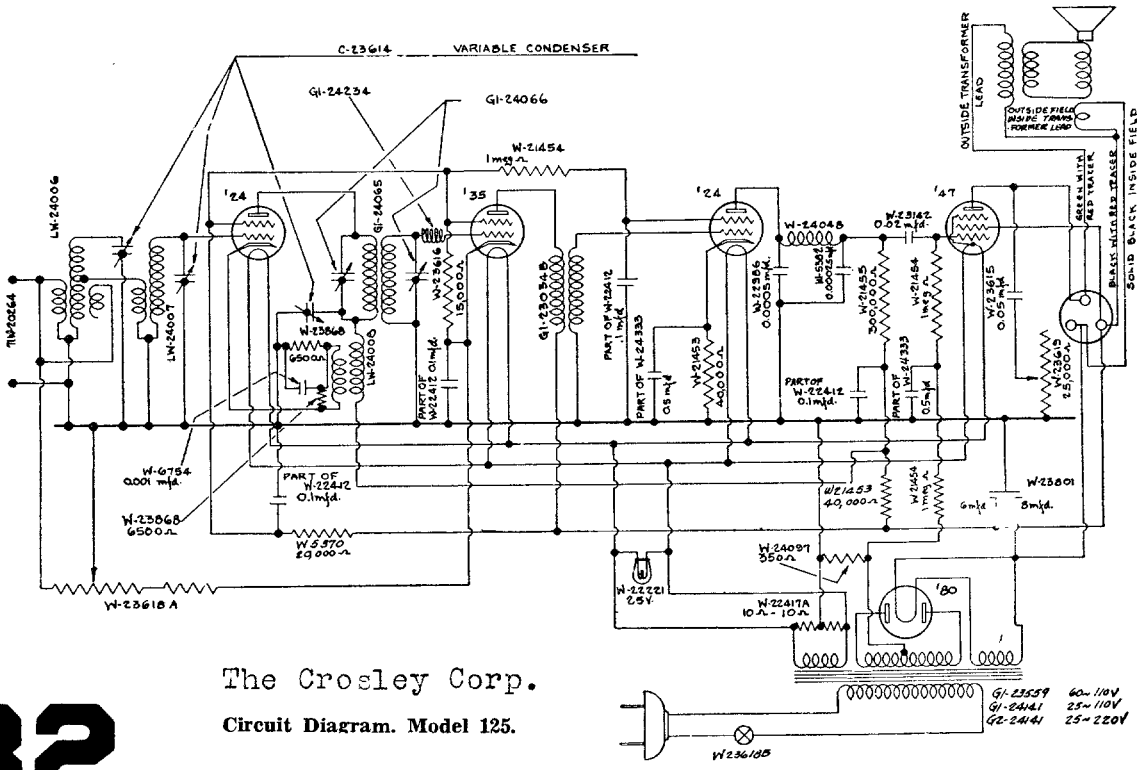

The Crosley Corp.

Circuit Diagram. Model 125.

MODEL 48

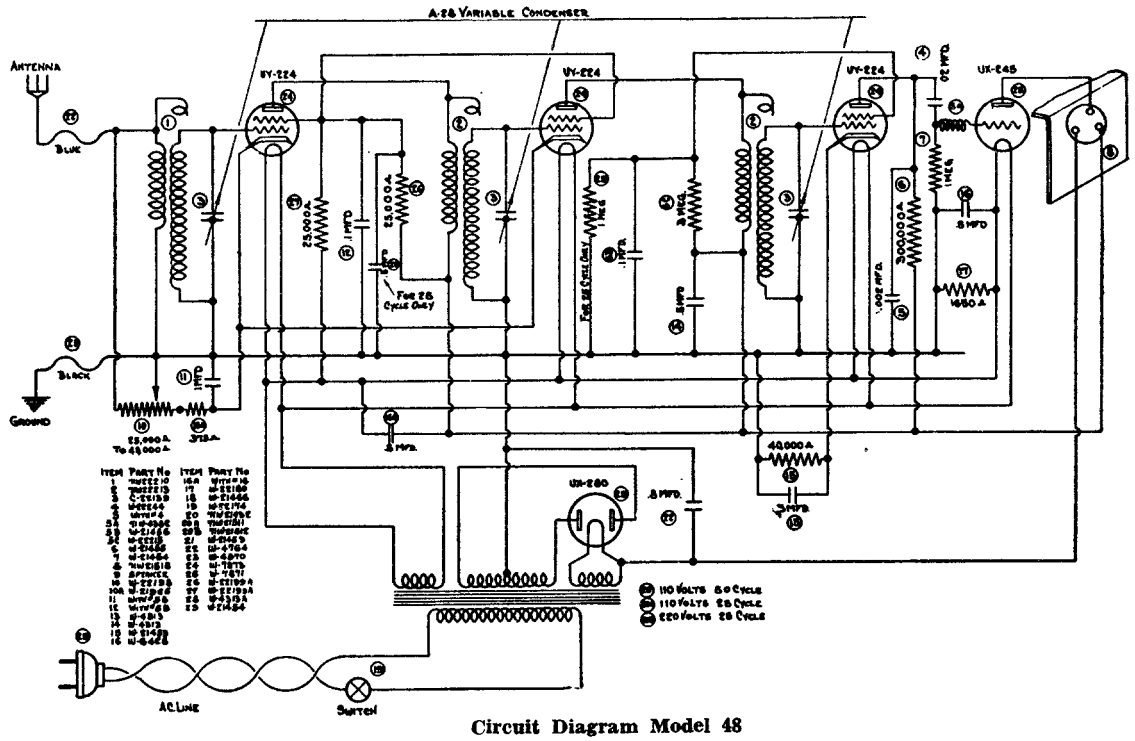

Circuit Diagram Model 48

The Crosley Corp.

Models 53, 54 and 57

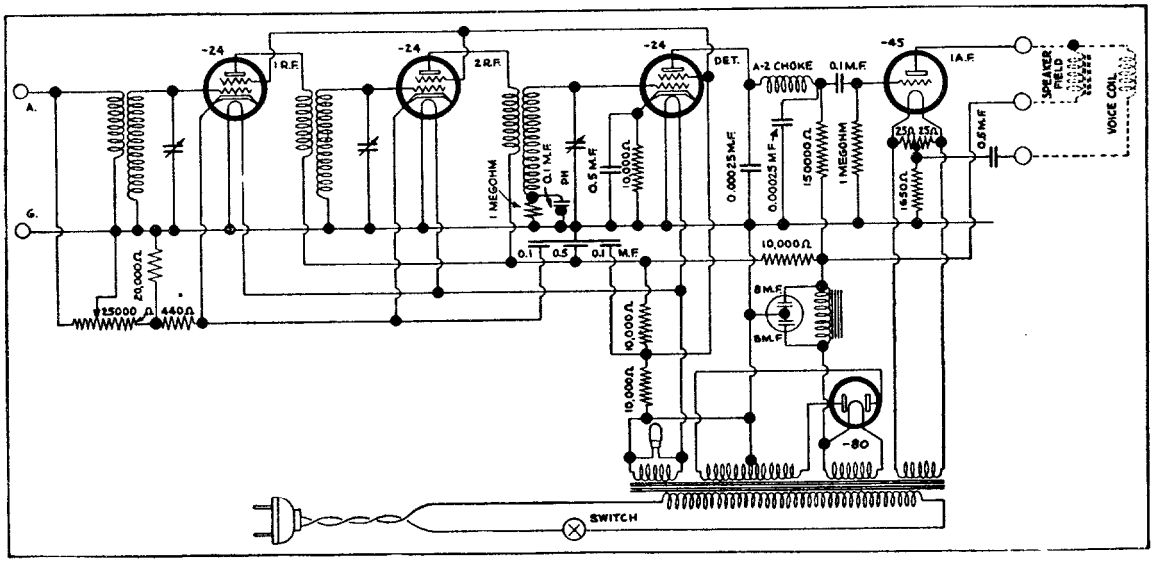

MODEL 536 AND 5536

Figures in first column refer to parts in Diagrams.

Item No.	Part No.	Description
1	W —29784B	Antenna—Flexible
2A	W — 4099B	Dial Light
2B	W — 4099B	Dial Light
	G6 —27134	Dial Light Socket Assembly
3	G4 —28859	Filter Choke
4	G106—32000	Ant. Coil
5	G104—32004	1st I-F Coil
6	G103—32004	2nd I-F Coil
7	G94 —32002	Osc. Coil
8Z, 8Y, 8X	W —29804A	Condenser, 8 Mfd. 125 V. / 16 Mfd. 125 V. / 25 Mfd. 100 V.
9	G1 —34002	Condenser, .00025 Mfd. (Molded)
10	W —28620	Condenser, .003 Mfd. 200 V.
11	W —23191A	Condenser, .01 Mfd. 400 V.
12A	W —36541	Condenser, .02 Mfd. 160 V.
12B	W —36541	Condenser, .02 Mfd. 160 V.
12C	W —36541	Condenser, .02 Mfd. 160 V.
12D	W —36541	Condenser, .02 Mfd. 160 V.
13	W —32780B	Condenser, .05 Mfd. 400 V.
14	W —24049C	Condenser, 1 Mfd. 160 V.
16	W —37075	Condenser, 2 Section Trimmer
17	W —40998	Condenser, 1 Section Trimmer
18	G22 —33001	2 Section Var. Tuning Condenser
	C —40926	Dial Glass—536 only
	W —40632B	Pointer Disc—536 only
	W —41014A	Dial Glass Bracket R-H—536 only
	W —41013A	Dial Glass Bracket L-H—536 only
	W —41227	Drive Chain—536 only
	W —40633B	Bearing Support—536 only
	W —41112A	Driven Sprocket—536 only
	W —41113A	Driver Sprocket
	W —40486	Pointer Disc Mtg. Screw
	C —40927	Dial Glass—5536 only
	B —40818B	Pointer Disc—5536 only
	W —41158	Support Bracket L-H—5536 only
	W —41143	Support Bracket R-H—5536 only
	W —40797	Dial Glass Bracket—5536 only

Item No.	Part No.	Description
	W —41162	Drive Chain—5536 only
	W —41160	Bearing Bracket—5536 only
	W —41159A	Shaft—5536 only
	W —40909	Spring Washer—5536 only
	W —31840A	Snap Ring—5536 only
19	B —40999	Power Cord & Plug
20	—36316	Resistor, 2700 Ohm ¼W.
21	— 4921C	Resistor, 10,000 Ohm 1W.
22	—35928	Resistor, 60,000 Ohm ¼W.
23A	—35600	Resistor, 100,000 Ohm ¼W.
23B	—35600	Resistor, 100,000 Ohm ¼W.
24	—35601	Resistor, 300,000 Ohm ¼W.
25	—36322	Resistor, 500,000 Ohm ¼W.
26	—35927	Resistor, 2 Megohm ¼W.
27	—33490	Resistor, 10 Megohm ¼W.
28	W —28589	Resistor, 350 Ohm ½W. Flex.
29	W —41000	Candohm—2 Sections
30A	G151—36400	Socket Type 6K7
30B	G151—36400	Socket Type 6K7
31	G157—36400	Socket Type 6J7
32	G161—36400	Socket Type 25A6
33	G162—36400	Socket Type 25Z6
	W —40911	Tube Shield
	W —27981A	Tube Shield Base
34	B —41012	Speaker 237BL9
	W —40593	Speaker Mtg. Bracket
	— 6415	Mtg. Bracket Screw
35	—41004	Band Selector Switch
36Z, 36Y	—41002	Volume Control 4800 Ohm Tap 160 Ohm Line Switch
	B —40590	Escutcheon
	D — 28	Escutcheon Mtg. Screws (4) } 536 only
	W —41019	Knob
	W —40839	Escutcheon
	W —40840	Escutcheon Plate
	W —29760A	Escutcheon Pin } 5536 only
	W —41019	Knob (2)
	W —41021	Knob (1)

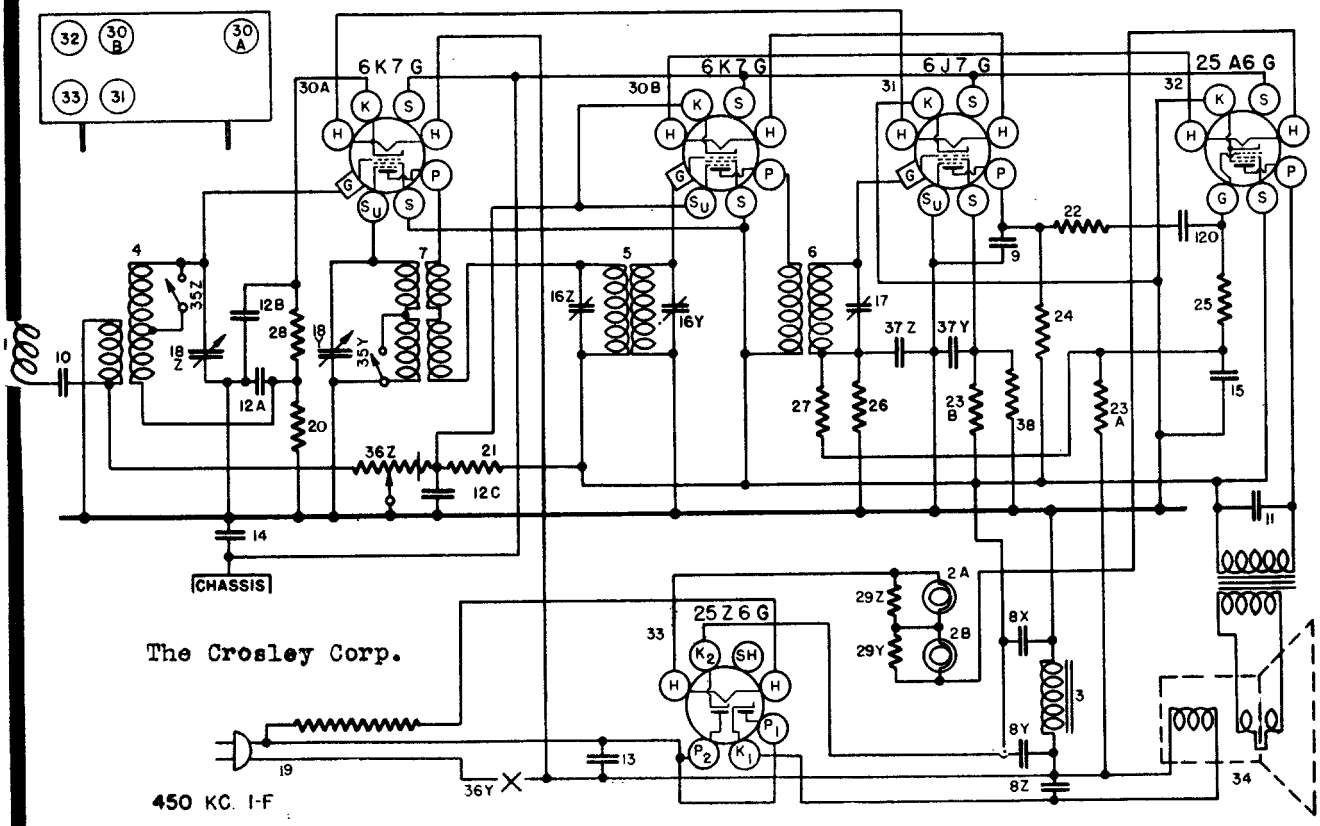

MANUAL OF MOST-OFTEN-NEEDED RADIO DIAGRAMS

PARTS LIST—MODEL 6H2

*** Figures in 2nd last column refer to parts shown in wiring diagram of Model 6H2**

Qty.	Part No.	Description	Item
1	G3-32000	Antenna Coil (Low Freq.)	2
1	G1-32002	Antenna Coil (High Freq.)	3
1	G2-32001	R. F. Trans. Coil (L. F.)	4
1	G1-32001	R. F. Trans. Coil (H. F.)	5
1	G2-32002	Oscillator Coil (L. F.)	6
1	G1-32002	Osc. Coil (H. F.)	7
1	G9-32004	1st I. F. Trans. (With Trimmers	8-18 19
1	G10-32004	2nd I. F. Trans. (With Trimmers	9-20 21
6	W25200	Coil Shield Socket	
3	W30802	Coil Shield	
2	W25025A	Coil Shield	
1	W25025A	Coil Shield	
3	W26891	Insulating Washer L. F. Ant.-R. F. and Osc.	2-4-6
3	W21541B	Retaining Ring	2-4-6
2	W30026	Retaining Ring	3-5-7
1	G1-33008	L. F. & H. F. Antenna Trimmer Cond.	11-12
1	G1-33008	L. F. & H. F. R. F. Trimmer Cond.	13-14
1	G15-33009	L. F. & H. F. Osc. Trimmer Condenser	15-75
1	G2-33007	L. F. & H. F. Osc. Seriea Trimmer Cond.	16-17
1	G19-33002	Variable Tuning Condenser Gang	10
1	G5-32086	Dial Drive Assm.	
1	W32208A	Dial Hand	
2	W32293	Dial Hand Nut	
1	G75-27456	6D6 Socket	61
1	G47-27456	6A7 Socket	62
1	G48-27456	6B7 Socket	63
1	G80-27456	76 Socket	64
1	G25-27456	42 Socket	65
1	G6-27456	80 Socket	66
3	W26010	Tube Shield Base	
2	W27328A	Tube Shield (6A7, 6B7)	
1	B26009C	Tube Shield (6D6)	
1	G6-30745	Power Transformer 60 cy. 110 V.	71
	G7-30745	Power Transformer 25 cy. 110 V.	72
	G8-30745	Power Transformer 25 cy. 220 V.	73
1	B32285	Band Change Switch	74

Qty.	Part No.	Description	Item
1	B30375A	Cable & Plug	67
1	W28552	Level Control (Volume) (3 Megohms)	58
2	G4-27134	Dial Light Brkt Assm.	
1	W25594B	Tone Control (80000 Ohm) & Line Switch	59-60
1	G16-26719	Ant.-Gnd. Terminal	1
		FILTER & BY-PASS CONDENSERS	
1	W29097C	8.-8.-8. Mfd. 450 V.-450 V.-250 V.	37-38 39
1	W26194B	12. Mfd. 475 V.	36
1	W30321	1. Mfd. 160 V.	32
3	W32379	0.02 Mfd. 200 V.	22 23 25
1	W32304	0.0014 Mfd.	24
1	W30322A	0.00017-0.006 Mfd. 200 V.-200 V.	26-27
1	W25537A	0.001-0.03 Mfd. 400 V.-400 V.	28-29
1	W30805	0.01 Mfd. 400 V.	30
1	W32378	0.01 Mfd. 400 V.	31
1	W24784	0.25 Mfd. 200 V.	33
1	W25517	0.008-0.05 Mfd. 400 V.-400 V.	34-35
1	W27540	0.0005 Mfd. 400 V.	40
		RESISTORS	
1	W28589	350 Ohms (Flexible)	41
1	21453	40000 Ohms	42
4	23785	500000 Ohms	43-48 50-53
2	26577	3 Megohms	44-46
1	W27504	100 Ohms (Flexible)	45
1	21454	1 Megohm	47
1	23403	150000 Ohms	49
1	21876	10000 Ohms	51
1	24814	7000 Ohms	52
1	33474	120000 Ohms	54
1	W31883	8500-25000 Ohms	56-57
3	W32352	Knob	
1	W32353	Knob	
1	W31007A	Speaker Cord (4 Lead)	
1	W32219A	Dial Glass	
1	W32220A	Dial Glass Retainer	
1	B32190C	Escutcheon	
1	W33106A	Escutcheon Gasket	
4	D28	Escutcheon Screws (.10 doz)	

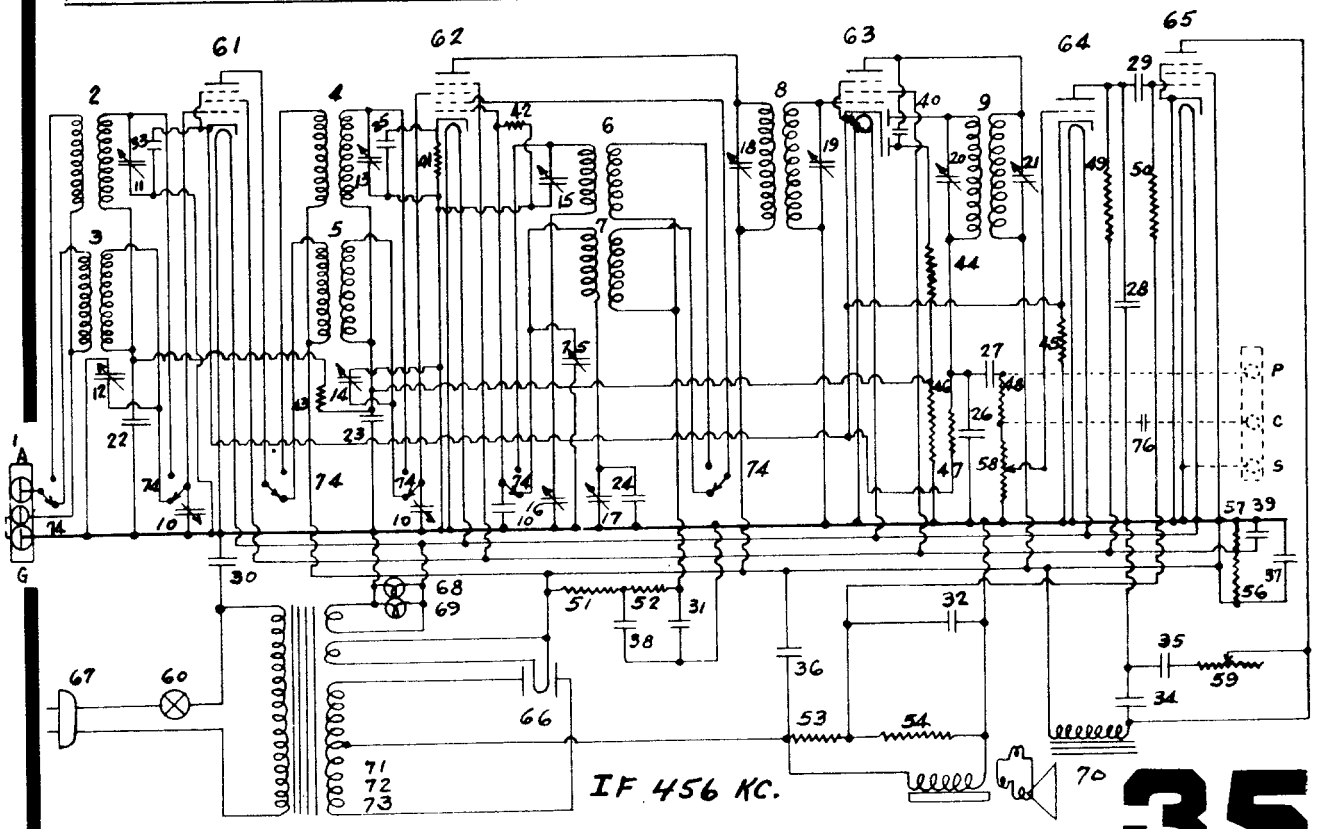

Crosley Radio Corporation

Model 124

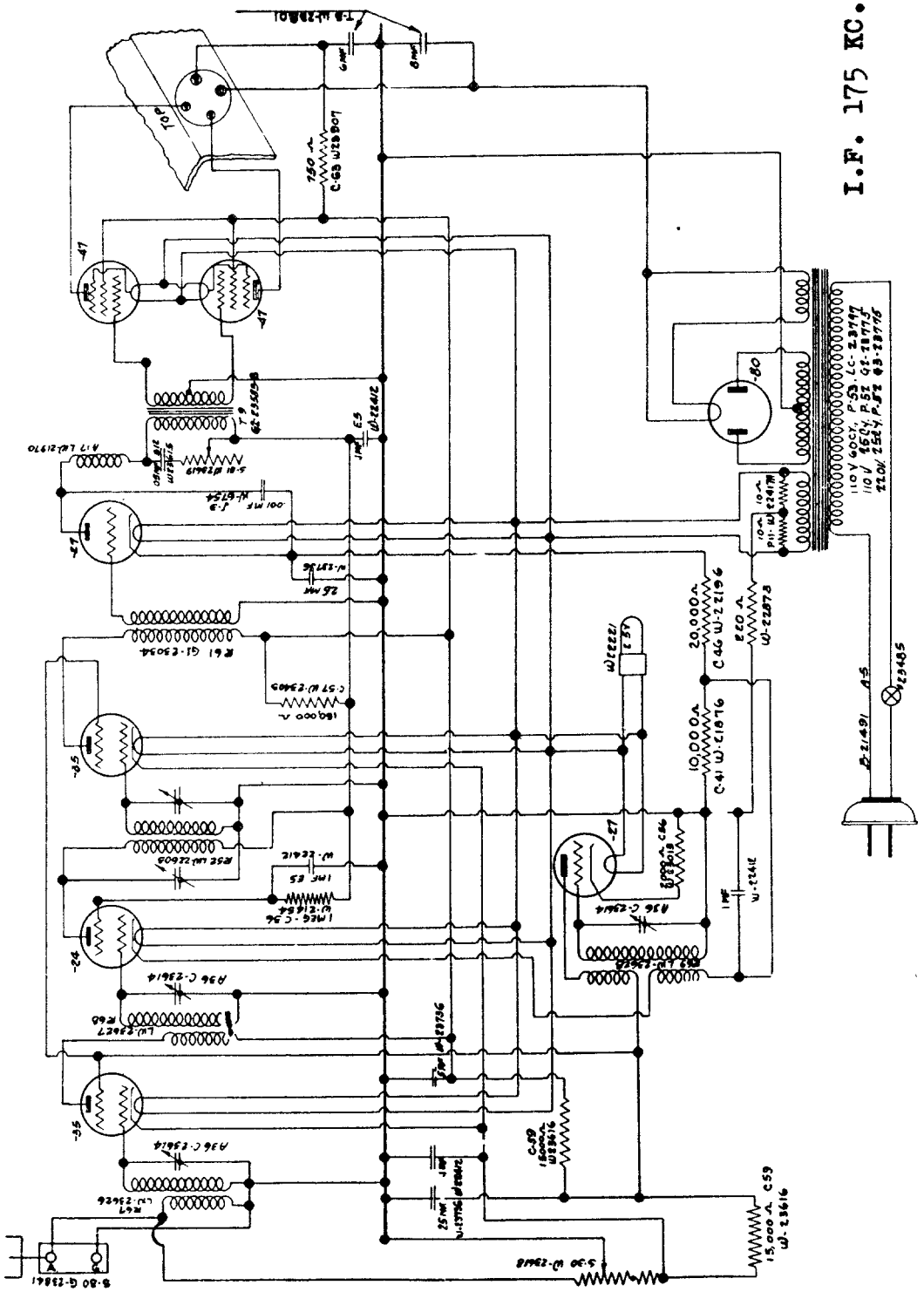

Crosley Model 147

1	W-27652	.003 MFD.
2	LW-27680	ANTENNA COIL
3	LW-27681	INTERSTAGE COIL
4	B-27706	TUNING CONDENSER
5	W-27694	VOLUME CONT. 4500Ω
6		LINE SWITCH
7	W-25438	.1 MFD.
8		.1 MFD.
9	W-27677A	8 MFD.
10		8 MFD.
11	W-21237A	60,000 Ω
12	W-26577	3 MEG.
13	W-27203	.02 MFD.
14	W-26578	5 MEG.
15	W-26690	4500 Ω
16	~~W-28438~~	~~.003 MFD.~~
17	W-27675	300 Ω RED DOT
18	~~GR-24284~~	~~10 MH.~~
19	GR-24774	FILTER CHOKE
20	W-27676	4 MFD.
21		4 MFD.
22	LW-27815	CORD & PLUG
23		~~E SOCKET~~
24	G11-27727	-36 SOCKET
25	G15-27727	-38 SOCKET
26	G17-27727	-39 SOCKET
27	27790	340 SPEAKER
28	W-26072	ANTENNA LEAD
29	W-4639C	2 AMP. FUSE
30	W-27652	.003 MFD.
31	W-28100	200 Ω CARBONM
32	G12-27727	- 37 SOCKET
33	W-27652	.003 MFD.
34	G1-24234	FILTER CHOKE

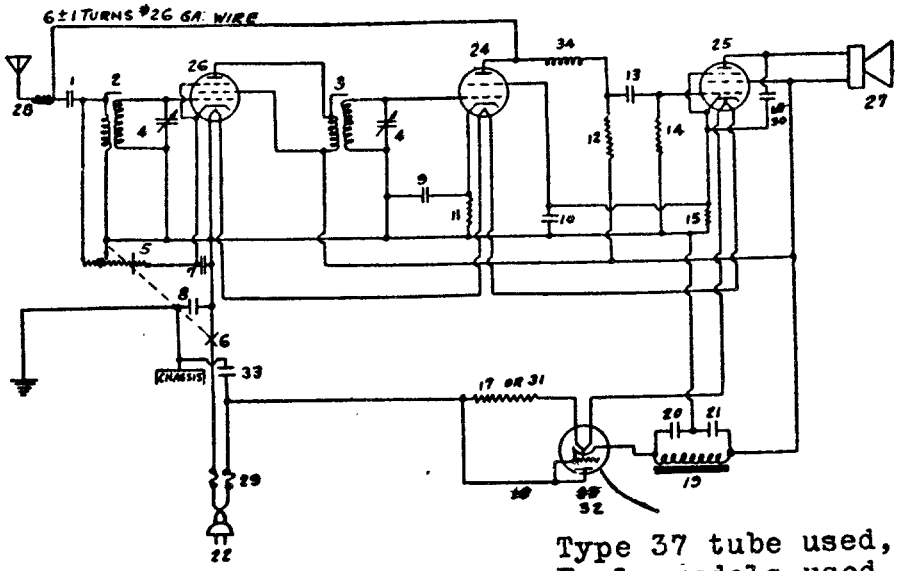

Type 37 tube used, Early models used type KR tube.

Crosley Model 148

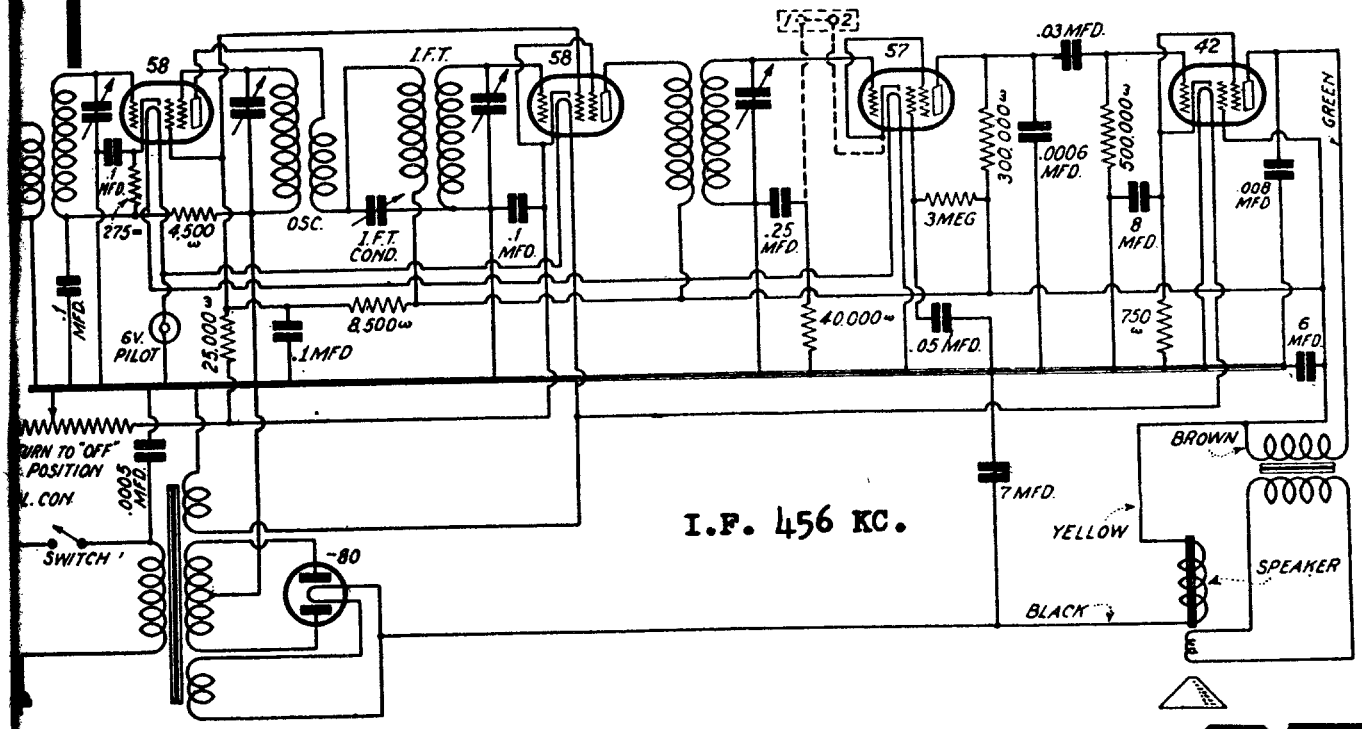

I.F. 456 KC.

The Crosley Radio Corporation, Cincinnati, Ohio

Model 158

Specifications

Model 158 is a seven tube superheterodyne designed for operation from A. C. electric circuits. The intermediate frequency used is 181.5 KC.

Tubes And Voltage Limits

The following are the voltages measured with the receiver in operating condition, but with no signal to the antenna circuit. Use a high resistance D. C. Voltmeter (1000 ohms per volt, or more) for all but filament voltages. In measuring filament or heater voltages use a low range A. C. meter. The voltage limits are + or — 10% of values given in the following table.

Line voltage—117.5 (235 for 220 volt receivers).

Plate voltage measured from plate contact to cathode contact.

Screen grid voltage measured from screen grid contact to cathode contact.

Suppressor grid voltage measured from suppressor grid contact to cathode contact.

Bias voltage measured from cathode contact to chassis.

Tube	Position	Voltages Plate	Screen Grid	Supp. Grid	Bias	Fil.
-58	R. F. Amplifier	270	85	0	0	2.5
-57	Oscillating Detector	270	80	0	6.0	2.5
-58	I. F. Amplifier	275	80	0	4.0	2.5
-56	Detector	0				2.5
-56	A. F. Amplifier	40			1.6	2.5
-42	Output	245	250		22.0	6.3
-80	Rectifier	350				4.8

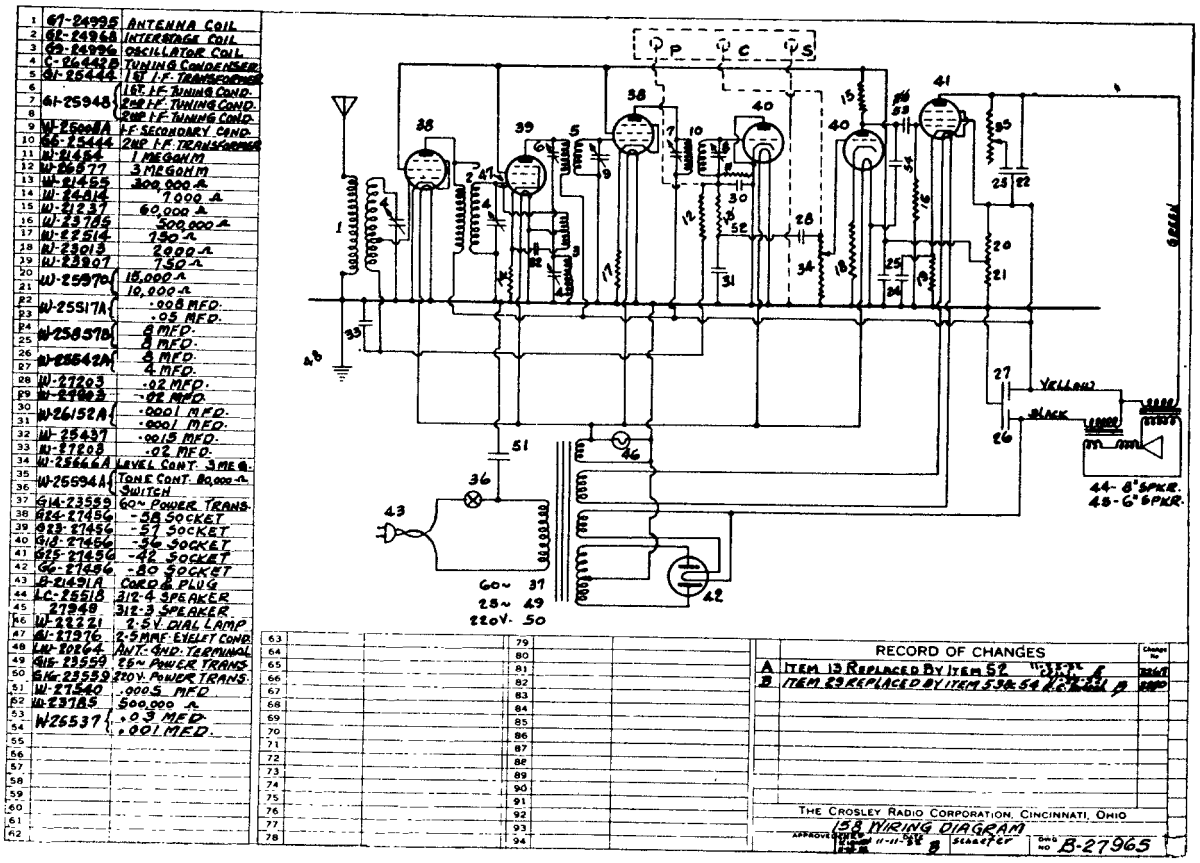

Model 160

1	G7-24995	ANTENNA COIL
2	G2-25968	INTERSTAGE COIL
3	G14-24996	OSCILLATOR COIL
4	G5-24065	1ST I.F. TRANS.
5	G10-24065	2ND I.F. TRANS.
6	C-26442B	TUNING CONDENSER
7	G3-25948	I.F. TUNING COND.
8	W-27204	.02 MFD.
9		.02 MFD.
10	W-25438	.1 MFD.
11		.1 MFD.
12	W-25937	275 Ω
13	W-21964	165 Ω
14	W-23785	500,000 Ω
15	W-21454	1 MEGOHM
16	W-23013	2000 Ω
17	W-22514	750 Ω
18	W-21455	300,000 Ω
19	W-27540	.0005 MFD.
20		
21	G3-25445	COUPLING CHOKE
22	W-21454	1-MEGOHM
23	W-23785	500,000 Ω
24	W-26152	.00015 MFD.
25		.0001 MFD.
26	W-26578	5-MEGOHM
27	W-26577	3-MEGOHM
28	W-27203	.02 MFD.
29	W-28287A	LEVEL CONT. 5000 Ω
30	W-25666	AUDIO LEVEL CONT. 3-MEG
31	W-26577	3-MEGOHM
32	W-23403	150,000 Ω
33	W-25516	.25 MFD.
34		.25 MFD.
35	W-27120	8500 Ω
36		25,000 Ω
37	W-21237	60,000 Ω
38	W-21875	100,000 Ω
39	W-23142	.02 MFD.
40	W-23615	.05 MFD.
41	W-22873	220 Ω
42	W-21455	300,000 Ω
43	W-25857A	8 MFD. 25 V
44		8 MFD. 200 V
45		
46		
47	W-28340	8 MFD. 350 V
48		12 MFD. 475 V
49	W-25594A	TONE CONT. 80,000 Ω
50		LINE SWITCH
51	B-21491A	CABLE & PLUG
52	W-22221	2.5V. DIAL LAMP
53	W-20264	ANT.-GND. TERMINAL
54	G19-25669	POWER TRANS. 60~
55	27869	337-4M. SPEAKER
56	G24-27456	-58 SOCKET
57	G18-27456	-56 SOCKET
58		
59	G6-27456	-80 SOCKET
60	G20-25669	POWER TRANS. 25~
61	G21-25669	POWER TRANS. 220~
62	W-21454	1-MEGOHM

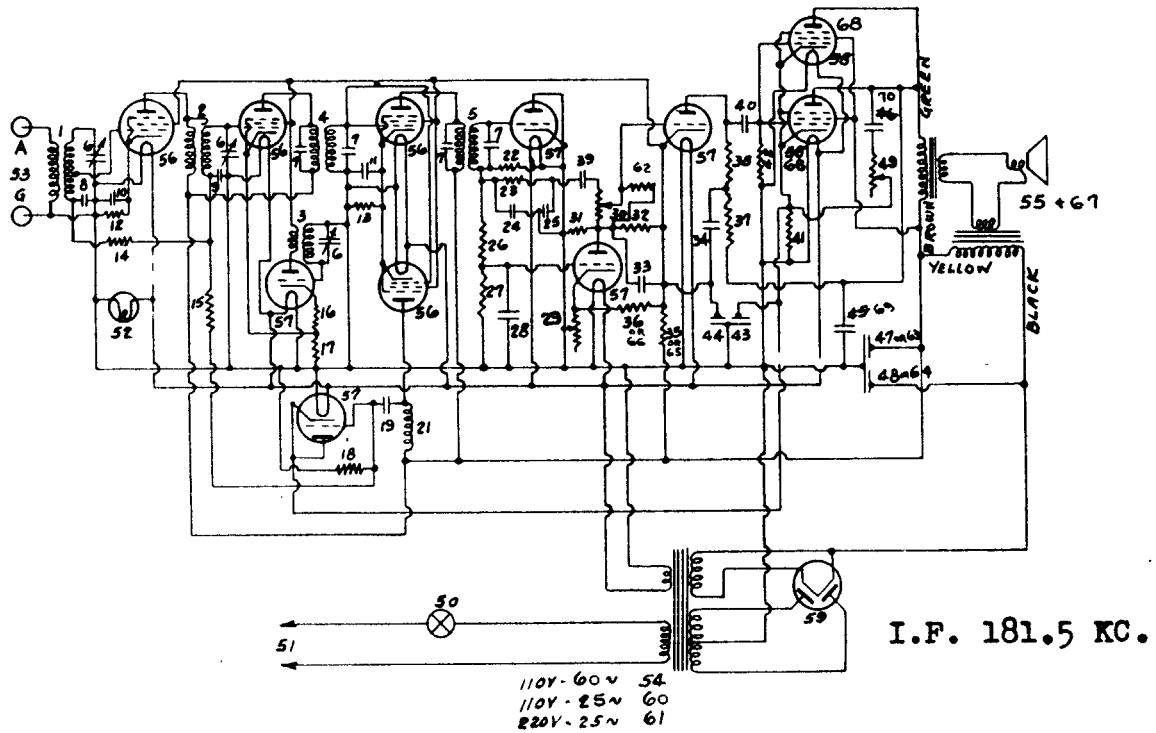

I.F. 181.5 KC.

63	W-28468	8 MFD. 350 V.	79	
64		12 MFD. 475 V	80	
65	W-28471	8500 ~	81	
66		25,000 ~	82	
67	27870	337-5M. SPEAKER	83	
68	G23-27456	2A5 SOCKET	84	
69	W-28860	.008 MFD.	85	
70		15 MFD.	86	
71			87	
72			88	
73			89	
74			90	
75			91	
76			92	
77			93	
78			94	

RECORD OF CHANGES

			Change No
A	ITEM 62 ADDED	12-29-32	3309
B	ITEMS 63 AND 64 ADDED	1-6-33	3318
B	ITEMS 65 AND 66 ADDED	1-7-33	3319
C	ITEM 58 REPLACED BY ITEM 68	2-8-33	3353
D	ITEMS 45 & 46 REPLACED WITH ITEMS 69 & 70	2-20-33	3362

THE CROSLEY RADIO CORPORATION, CINCINNATI, OHIO

160 WIRING DIAGRAM

Schaefer 12-15-32

DWG NO B-28334

Model 167

1	G20-24995	ANTENNA COIL
2	G17-24996	OSCILLATOR COIL
3	L-27426	VARIABLE CONDENSER
4	G7-25444	1ST I.F. TRANS.
5	G2-25948	1ST I.F. TRANS. PRI. TUN. COND.
6	W-25008A	1ST I.F. SEC. TUN. COND.
7	W-27548	2ND I.F. TRANS. SEC. TUN. COND.
8	G7-25445	2ND I.F. TRANS.
9	W-25537A	0.0006 µf 400V.
10		0.03 µf 400V.
11	W-21455	300,000 Ω
12	W-23785	500,000 Ω
13	27610	335-3 SPEAKER
14	LW-20264	ANT-GND. TERM.
15	W-26573B	VOLUME CONTROL
16		LINE SWITCH
17	W-25438	0.1 µf 200V.
18		0.1 µf 200V.
19	W-25438	0.1 µf 200V.
20		0.1 µf 200V.
21	W-25937	275 Ω
22	~~W-20090~~	~~4500 Ω~~
23	~~W-27120~~	~~8,500 Ω~~
24		~~28,000 Ω~~
25	W-24784	0.25 µf 200V.
26	~~W-25817A~~	~~0.05 µf~~
27		~~0.008 µf~~
28	W-21453	40,000 Ω
29	W-26577	3 MEG.
30	W-23907	750 Ω
31	W-27488	8 µf 25V.
32		6 µf 800V.
33	W-23701B	7 µf 440V.
34	B-21491A	CORD & PLUG
35	G11-23559	POWER TRANS. (60~)
36	W-4099A	6V. DIAL LIGHT
37	G23-27456	-57 SOCKET
38	G24-27456	-58 SOCKET
39	G25-27456	-42 SOCKET
40	G6-27456	-80 SOCKET
41	~~W-27540~~	~~0.0005 µf~~
42	W-28913	WAVE CHANGE SWITCH
43	G12-23559	POWER TRANS. (25~)
44	G13-23559	POWER TRANS. (220V.)
45	W-29089	0.02 MFD. 400V.
46		0.016 MFD. 400V.
47	~~W-25970~~	~~10,000 Ω~~
48		~~15,000 Ω~~
49	W-25591A	.0005 MFD 400V.
50	W-27120	28,000 Ω
51		8,500 Ω
52	36137	3,500 Ω
53		
54		
55		
56		
57		
58		
59		
60		
61		
62		

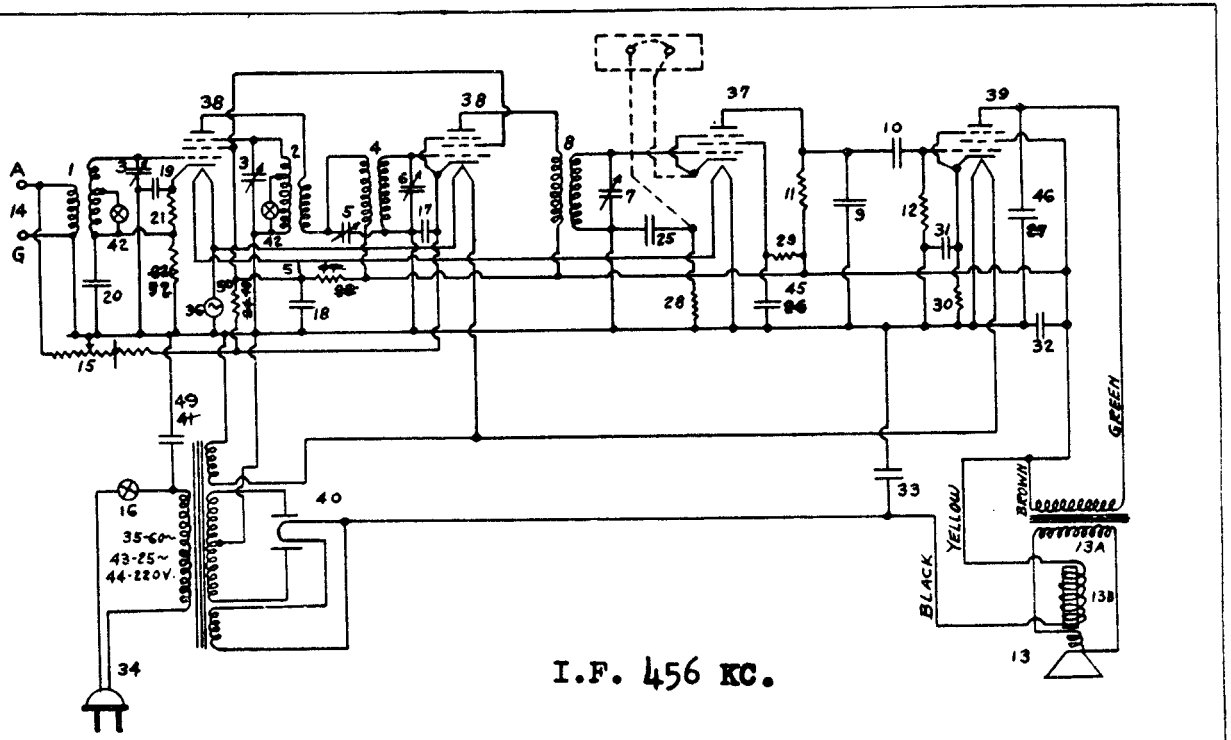

I.F. 456 KC.

63			79		
64			80		
65			81		
66			82		
67			83		
68			84		
69			85		
70			86		
71			87		
72			88		
73			89		
74			90		
75			91		
76			92		
77			93		
78			94		

RECORD OF CHANGES

		Changes No.
A	ITEMS 26 & 27 REPLACED WITH ITEMS 45 & 46 B	3395
B	ITEMS 15 & 16 WAS W-26573A 4-3-33 R.E.D. B	3396
B	ITEMS 23 & 24 REPLACED WITH ITEMS 47 & 48 4-5-33 R.E.D. B	3378
C	ITEM 41 REPLACED BY ITEM 49	3434
D	ITEMS 37 & 38 REPLACED BY (10 & 5)	3451

THE CROSLEY RADIO CORPORATION, CINCINNATI, OHIO

167 WIRING DIAGRAM

APPROVED DATE Schaefer DWG NO B-28932

The Crosley Radio Corporation, Cincinnati, Ohio

Model 168

Specifications

Model 168 is a seven tube dual band superheterodyne designed for operation from A.C. electric circuits. The intermediate frequency is 181.5 Kc.

Tubes and Voltage Limits

The following are the tubes and voltages measured with the receiver in operating condition but with no signal to the antenna circuit. Line voltage should be 117.5 volts (235 volts for 220 volt receivers). All voltages, except filament, are measured from tube contact to chassis with a 500 volt D.C. voltmeter (1000 ohms per volt). Filament voltages are measured with a low range A.C. voltmeter.

Tube	Position	Plate	Screen Grid	Cathode	Suppressor Grid	Filament
56	Oscillator	66		6.5		2.5
58	Modulator	270	122	8.0	8.0	2.5
58	I. F. Amplifier	270	122	8.5	8.5	2.5
58	I. F. Amplifier	270	122	7.0	7.0	2.5
2A6	Detector and A. F. Amplifier	231		2.0		2.5
2A5	Output	257	270	18.0		2.5
80	Rectifier	380				4.9

Voltage limits are plus or minus 10% of values given.

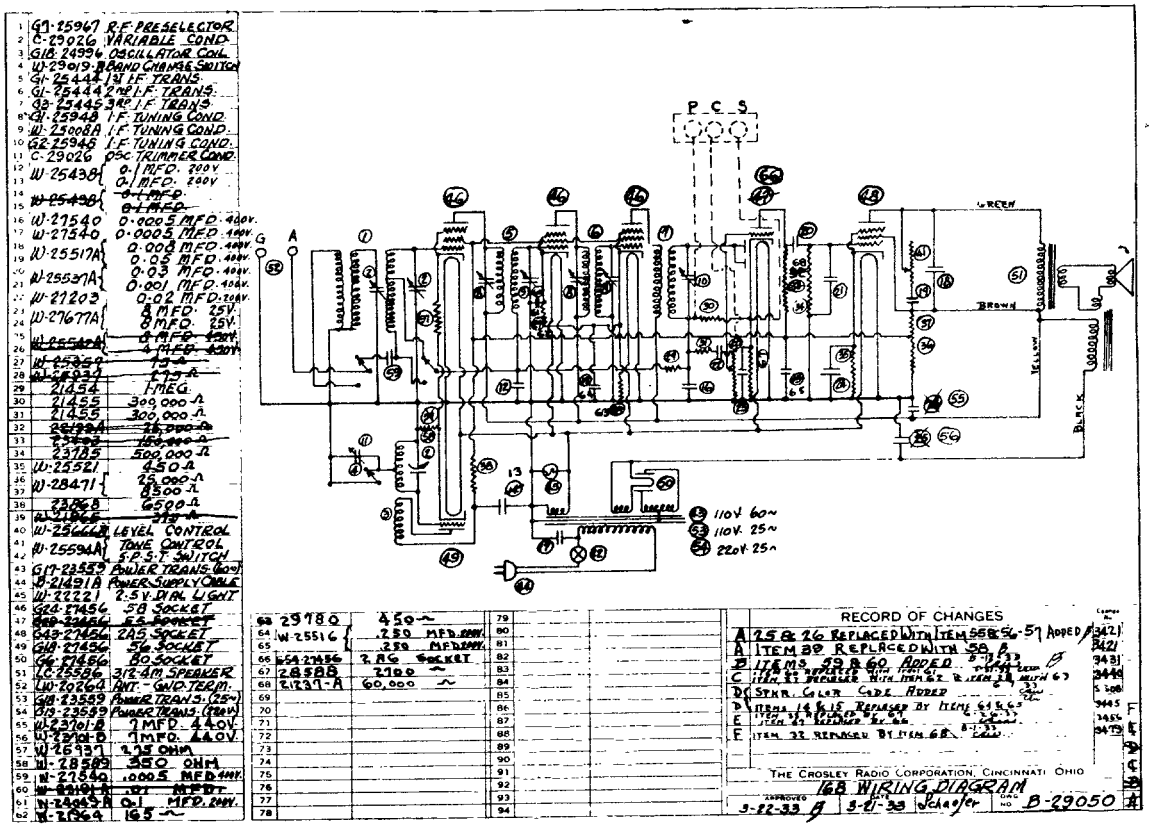

The Crosley Radio Corporation, Cincinnati, Ohio

Model 169

Specifications

Model 169 is a four tube dual band superheterodyne designed for operation from A.C. electric circuits. The intermediate frequency is 456 Kc.

Tubes and Voltage Limits

The following are the tubes and voltages measured with the receiver in operating condition but with no signal to the antenna circuit, with a line voltage of 117.5 volts (235 volts for 220 volt receivers). All voltages, except filament, are measured with a 500 volt D.C. voltmeter (1000 ohms per volt) from tube contact to chassis. Filament voltages are measured with a low range A.C. voltmeter.

Tube	Position	Plate	Screen Grid	Cathode	Suppressor Grid	Filament
58	Oscillator-Modulator	188	88	28	0	2.5
2B7	I. F. Amplifier and Detector	188	88	2		2.5
42	Output	178	188	14.5		2.5
80	Rectifier	322				4.9

Voltage limits are plus or minus 10% of values given.

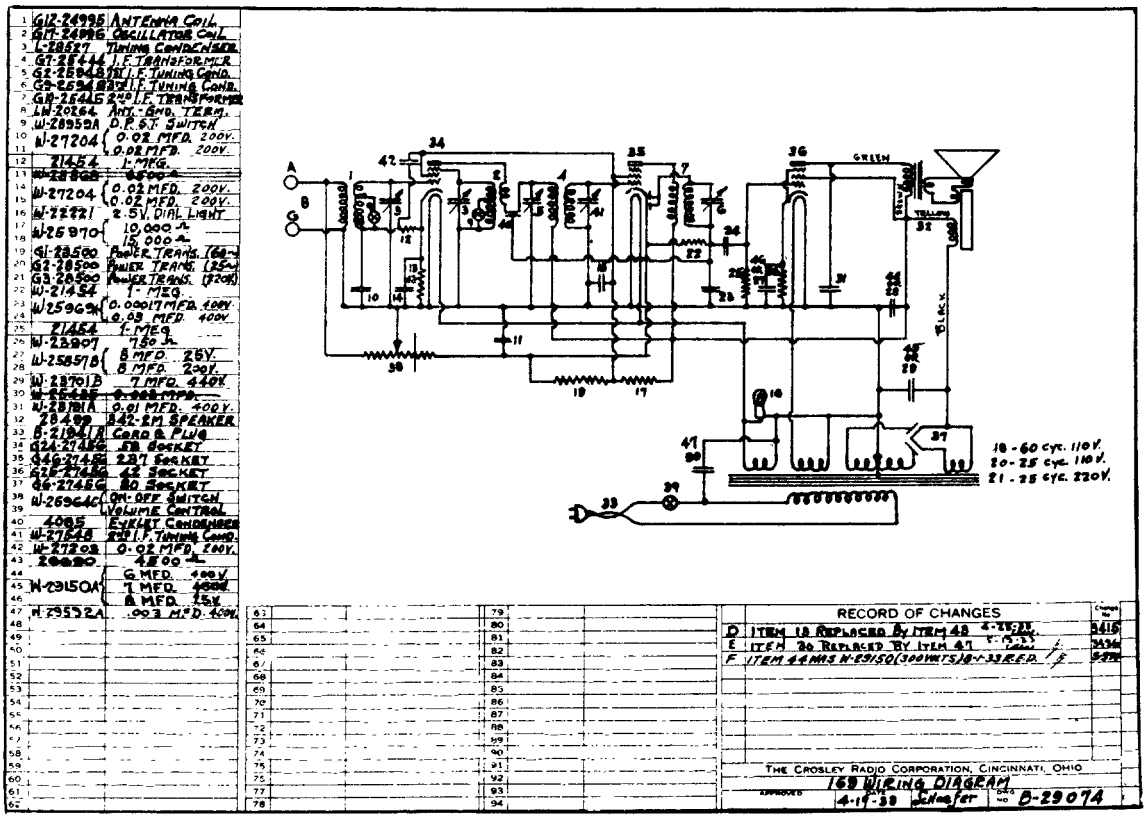

The Crosley Radio Corporation, Cincinnati, Ohio

Model 170

Specifications

Model 170 is a ten tube dual band superheterodyne designed for operation from A.C. electric circuits. The intermediate frequency used is 181.5 Kc.

Tubes and Voltage Limits

The following are the tubes and voltages measured with the receiver in operating condition but with no signal to the antenna circuit, and with a line voltage of 117.5 volts (235 volts for 220 volt receivers). All voltages, except filament, are measured with a 500 volt D.C. voltmeter (1000 ohms per volt) from tube contact to chassis. Filament voltages are measured with a low range A.C. voltmeter.

Tube	Position	Plate	Screen Grid	Cathode	Suppressor Grid	Filament
58	Modulator	276	120	6.0	6.0	2.5
56	Oscillator	50		6.0		2.5
58	I. F. Amplifier	276	120	8.0	8.0	2.5
58	I. F. Amplifier	276	120	8.0	8.0	2.5
56	Detector	0				
56	Phase Shifter	55		0		2.5
56	A. F. Amplifier	56		2.0		2.5
2-2A5	Output	269		3.0		2.5
80	Rectifier	355	276	18.0		2.5
						4.9

Voltage limits are plus or minus 10% of values given.

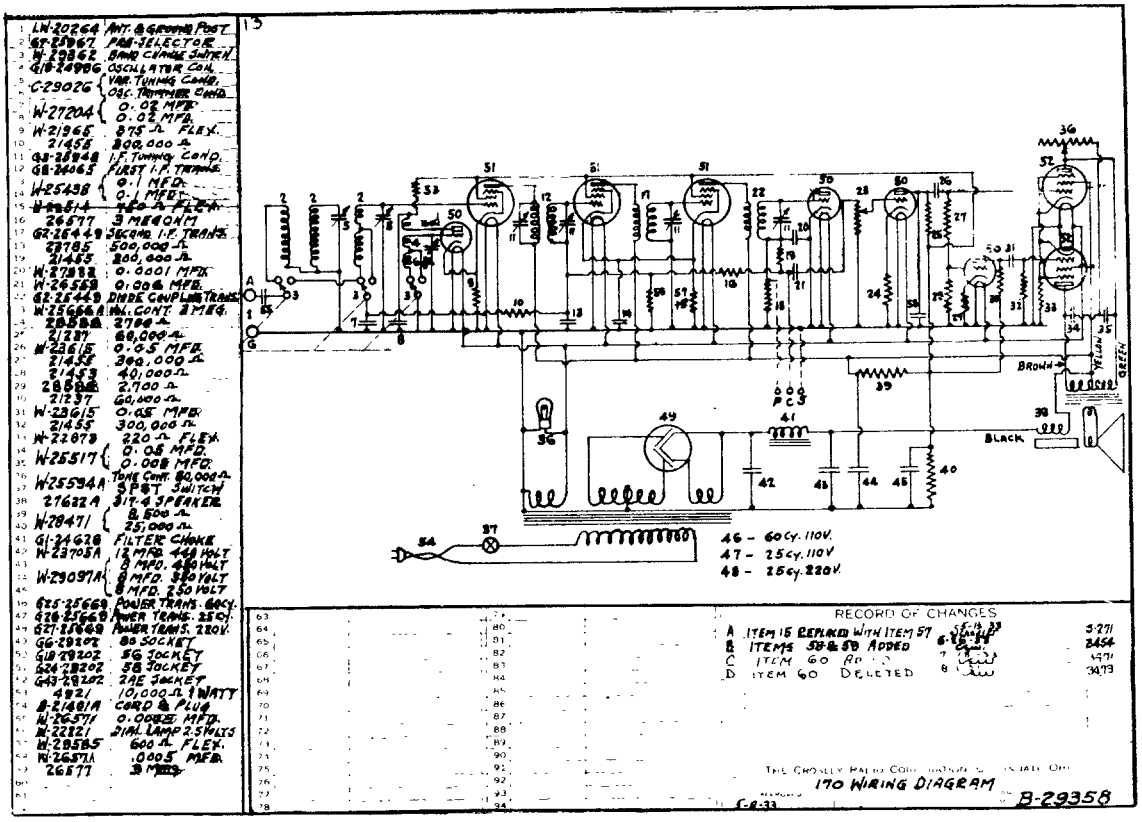

The Crosley Radio Corporation, Cincinnati, Ohio

Model 171

Specifications

Model 171 is a twelve tube dual band superheterodyne designed for operation from A.C. electric circuits. The intermediate frequency is 181.5 Kc.

Voltages and Tube Limits

The following are the tubes and voltages measured with the receiver in operating condition but with no signal to the antenna circuit, and with a line voltage of 117.5 volts (235 volts for 220 volt receivers). All voltages, except filament are measured with a 500 volt D.C. voltmeter (1000 ohms per volt) from tube contact to chassis. Filament voltages are measured with a low range A.C. voltmeter.

Tube	Position	Plate	Screen Grid	Cathode	Suppressor Grid	Filament
58	R. F. Amplifier	267	115	3.0	3.0	2.5
56	Oscillator	60		7.0		2.5
58	Modulator	267	115	5.5	5.5	2.5
58	I. F. Amplifier	267	115	4.5	4.5	2.5
2B7	A. V. C. Tube	267	115	4.5	4.5	2.5
56	QAVC Tube	70		0-20.0*		2.5
56	Detector	0		0		2.5
56	Phase Shifter	58		2.5		2.5
56	A. F. Amplifier	170		115		2.5
2-2A5	Output	260	267	17.5		2.5
80	Rectifier	355				4.9

Voltage limits are plus or minus 10% of values given.
***Voltage depends on position of "Q" control.**

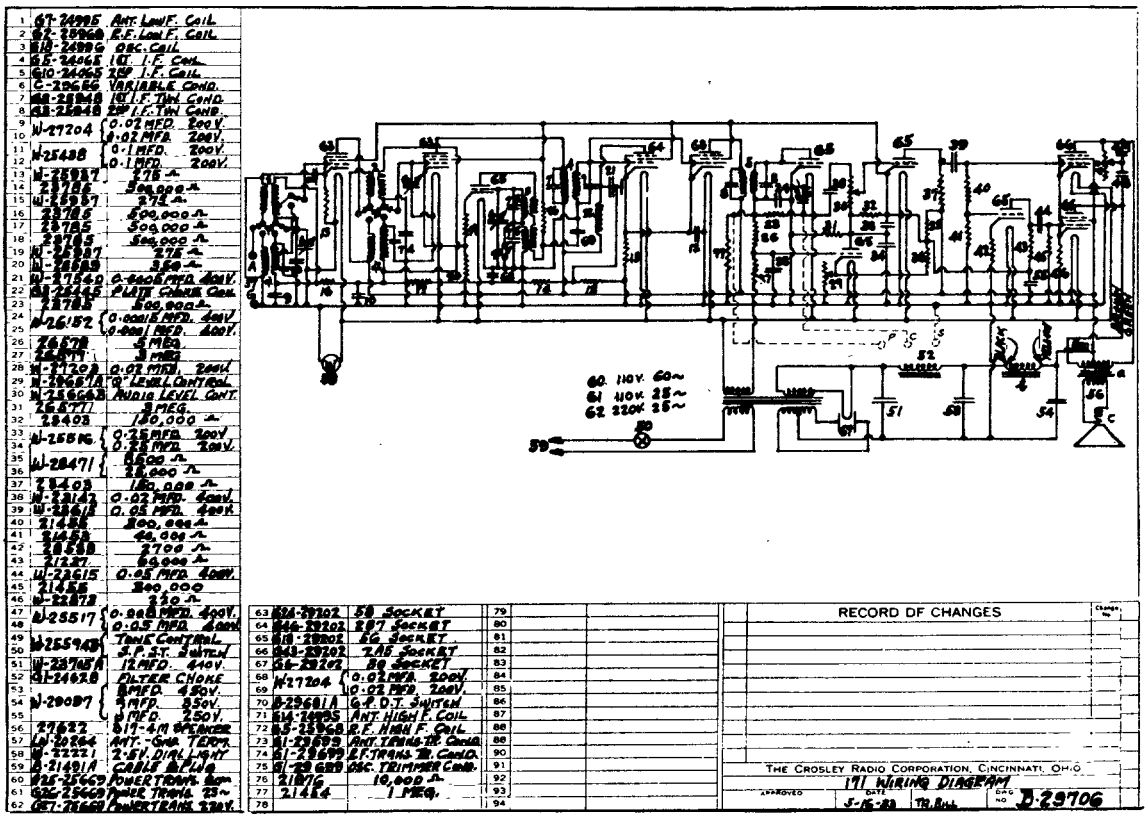

Crosley Radio

I.F. 450 KC.

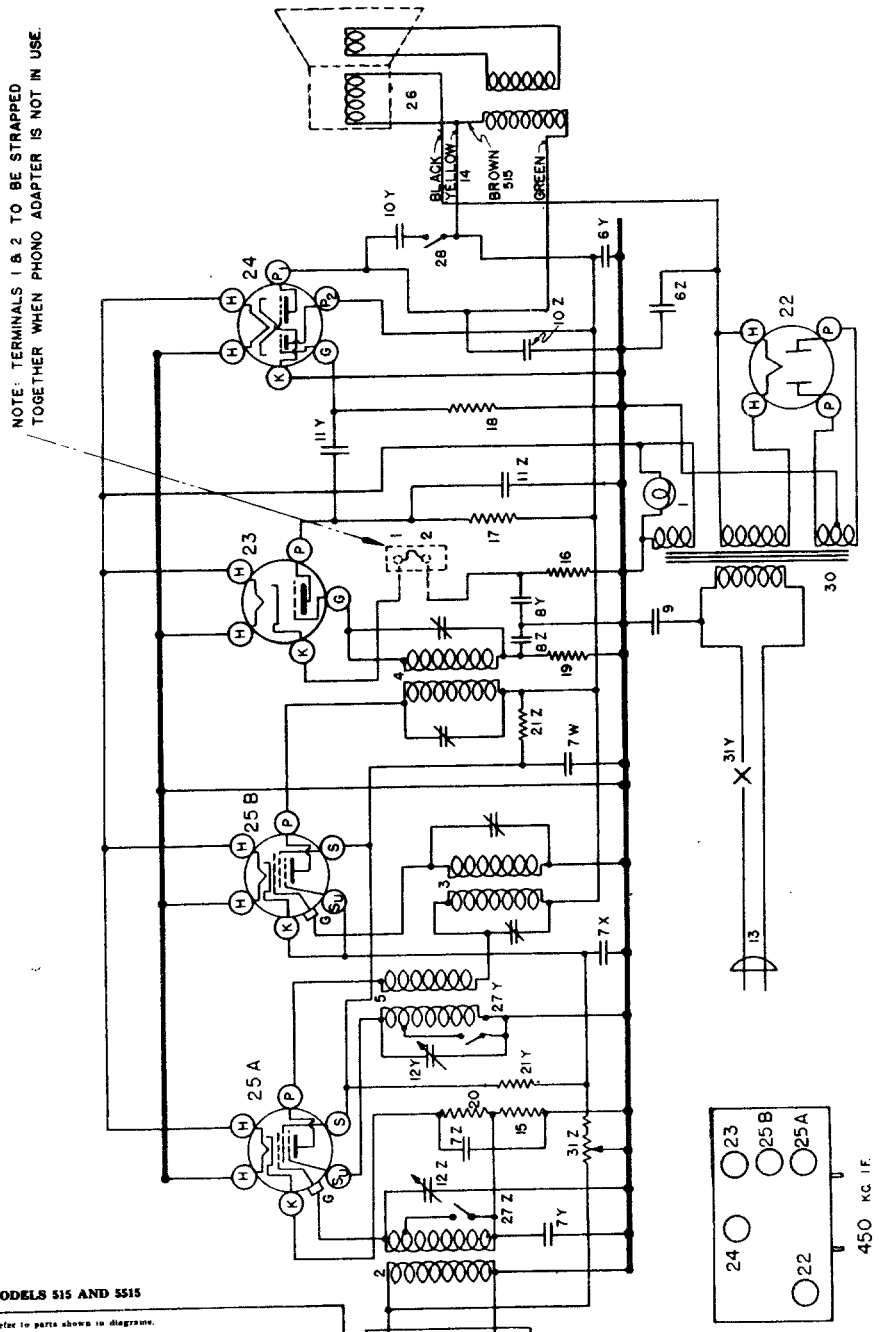

WIRING DIAGRAM OF MODELS 515 AND 5515

PARTS LIST—MODELS 515 AND 5515

Figures in first column refer to parts shown in diagrams.

Item No.	Part No.	Description
1	G4—27134	Dual Light Socket Assembly.
2	G42—32000	Coil Ant.
3	G48—32004	1st. I. F. Trans.
4	G49—32004	2nd. I. F. Trans.
5	G47—32002	Det. Coil.
6Z	W—36719	Condenser, 8 Mfd., 450 Volts.
6Y		Condenser, 6 Mfd., 450 Volt.
7Z	W—28623	Condenser, 0.02 Mfd. 200 Volt
7Y		Condenser, 0.02 Mfd 200 Volt.
7X	W—28623	Condenser, 0.02 Mfd. 200 Volt.
7W		Condenser, 0.02 Mfd. 200 Volt.
8Z	W—28622	Condenser, 0.1 Mfd. 200 Volt.
8Y		Condenser, 0.1 Mfd. 200 Volt.
9	W—30805	Condenser, 0.01 Mfd. 400 Volt.
10Z	W—35011	Condenser, 0.006 Mfd. 400 Volt.
10Y		Condenser, 0.03 Mfd. 400 Volt.
11Z	W—25537A	Condenser, 0.001 Mfd. 400 Volt.
11Y		Condenser, 0.03 Mfd. 400 Volt.
12Z	G14—33001	Variable Tuning Condenser Gang.
12Y		
	—36148	Dual Assembly complete.
13	B—33906A	Cord—Power Supply.
14	G3—35696	Speaker Cable (5515 only)
15	—31094	Resistor, 4,500 Ohms.
16	—21237A	Resistor, 60,000 Ohms.
17	21455	Resistor, 300,000 Ohms
18	25785	Resistor, 500,000 Ohms.
19	—21454	Resistor, 1 Megohm.
20	W—25937	Resistor, 275 Ohms Flex.
21Z	W—35963	Resistor, 8,500 Ohms.
21Y		Resistor, 25 000 Ohms
22	G6—28807	Socket, 80
23	G80—28807	Socket, 76.
24	G90—28807	Socket, 6B5.
25A	G75—28807	Socket, 6D6.
25B	G75—28807	Socket, 6D6.
	W—35772	Tube Shield, Half.
	W—35773	Tube Shield Cap.
	W—35774	Tube Shield Base
26	—219-BL9	Speaker
27Z	W—35753A	Band Change Switch.
27Y		
28	W—36184A	Tone Control Switch.
29	G1—26719	Ant. Gnd. Terminal.
30	G5—28600	Power Transformer, 60 Cy., 110 V
	G6—28600	Power Transformer 25 Cy., 110 V.
	G7—28600	Power Transformer, 25 Cy., 220 V.
31Z	—37343	Volume Control.
31Y		On-Off Switch
	B—35917	Escutcheon.
	—37156	Dial Glass
	—37156	Dial Pointer.
	—37157	Pointer Screw.
	W—31585B	Knob (2) large
	W—36355	Knob (2) small.

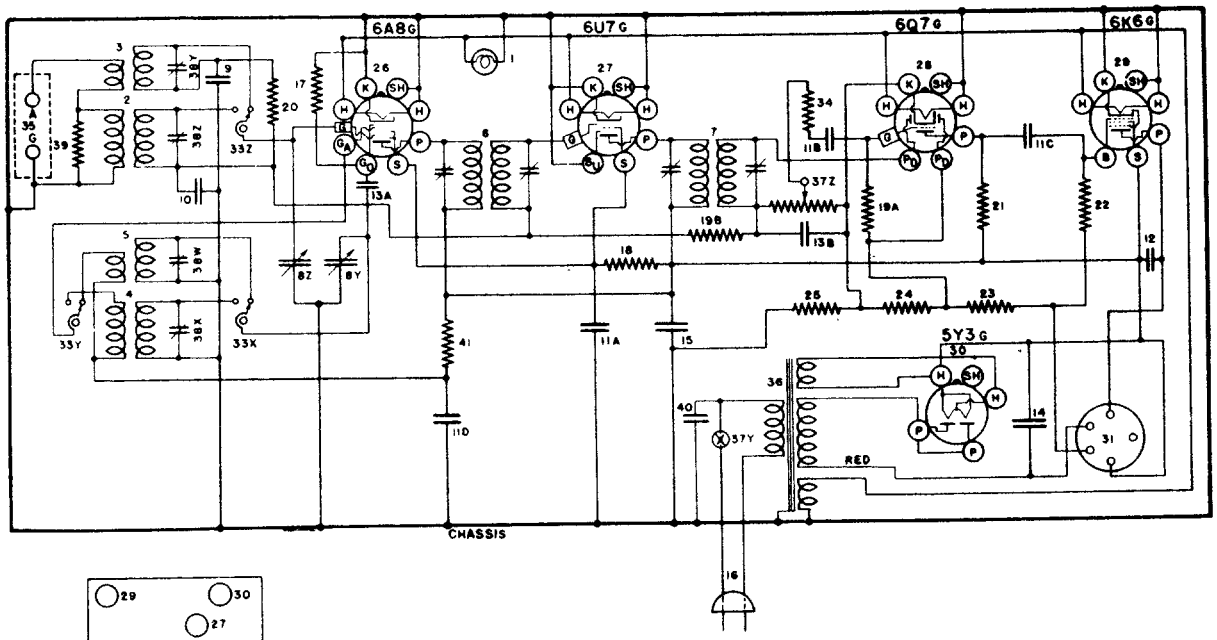

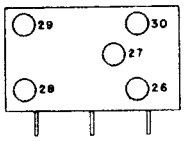

MODELS. 517 & 547 455 K.C. I.F.

The Crosley Corp.

WIRING DIAGRAM—MODEL 517 AND 547

PARTS LIST — MODEL 517 AND 547

Figures in first column refer to parts in Diagrams.

Item No.	Part No.	Description
1	W —43567	Bulb—Dial Light
	W —43568	Light Bracket
2	G132—32000	Ant. Coil, B. C.
3	G133—32000	Ant. Coil, H. F.
4	G132—32002	Osc. Coil, B. C.
5	G133—32002	Osc. Coil, H. F.
6	G136—32004	1st I-F Assembly
7	G137—32004	2nd I-F Assembly
8	G33 —33001	2 Sect. Var. Tuning Cond.(547 only)
8	G31 —33001	2 Sect. Var. Tuning Cond.(517 only)
	B —43551	Dial Face (517 only)
	B —43729	Dial Face (Tel. Tun. Dial only)
	W —43694	Disc—Center of Dial
	W —43693	Mask Ring (Dial)
	W —43778	Dial Support Ring
	B —43544	Dial Glass Support
	G1 —43564	Pullay Assembly
	W —43548	Drive Shaft
	W —43549	Retaining Ring } Dial Drive
	W —43550	Pointer (517 only)
	W —43542A	Drive Shaft Bracket
	W —43561	Drive Cable Spring
	—41582	Drive Cable
9	G12 —34002	Condenser .0005 Mf. H.F. Osc. Ser.
10	—36541	Condenser .02 Mf. 160 V.
11ABCD	W —28621	Condenser .02 Mf. 200 V.
12	W —34647	Condenser .01 Mf. 400 V.
13AB	G1 —34002	Condenser .00025 Mf. Molded
14	W —41081	Condenser 16 Mf. 250 V.
15	W —43450	Condenser 16 Mf. 200 V.
16	B —33906A	Power Cord and Plug
17	—21237A	Resistor 60,000 Ohm ¼W.
18	—24814	Resistor 7,000 Ohm ¼W.
19AB	—36688	Resistor 3 Megohm ¼W.
20	—21455	Resistor 300,000 Ohm ¼W.
21	—35601	Resistor 300,000 Ohm ¼W.
22	—23785	Resistor 500,000 Ohm ¼W.
23	W —28589	Resistor 350 Ohm ½W. Flex.
24	W —33012A	Resistor 40 Ohm ½W. Flex.
25	W —24537	Resistor 60 Ohm ½W. Flex.
26	G156—36400	Socket Type 6A8
27	G171—36400	Socket Type 6U7
28	G160—36400	Socket Type 6Q7
29	G172—36400	Socket Type 6K6
30	G173—36400	Socket Type 5Y3
	W —40911	Tube Shield
31	G103—28807	Socket—Speaker
32	257BP11"B"	Speaker, Spec. No. 51-A-5 (Cab. 6K & 7KA)
	—42927	Cone for 257BP11 "B" Speaker
	—41473	O. P. Trans. for 257BP11 "B" Spkr.
	—43539	Cardb'd Ring for 257BP11 "B" Spk.
	257BP18 "B"	Speaker, Spec. No. 51-A-8 (Cab. 7H & 7HA)
	—42927	Cone for 257BP18 "B" Speaker
	—43986	O. P. Trans. for 257BP18 "B" Spkr.
	—43539	Cardb'd Ring for 257BP18 "B" Spk.
	462CP11 "M"	Spkr., Spec. No. 1-D-971 (Cab.6FF)
	—40405	Cone for 462CP11 "M" Speaker
	—43989	O. P. Trans. for 462CP11 "M" Spkr.
	—43988	Field Coil for 462CP11 "M" Spkr.
	464BP15 "M"	Spkr., Spec. No. 1-D-1017(Cab. 7M)
	—43993	Cone for 464BP15 "M" Speaker
	—43994	Field Coil for 464BP15 "M" Spkr.
	—43995	O. P. Trans. for 464BP15 "M" Spkr.
33	W —43448	Switch Band Selector
34	—36761	Resistor 40,000 Ohm ¼W.
35	G1 —26719	Ant. and Ground Terminal Board
36	—43479	Power Trans. 110 V. 60 Cy.
	—43480	Power Trans. 110 V. 25 Cy.
	—43481	Power Trans. 220 V. 25 Cy.
37Z	—43449	Volume Control, 1 Megohm
37Y		Line Switch
38Z	W —41247A	Trimmer Cond. B. C. Ant.
38Y		Trimmer Cond. H. F. Ant.
38X		Trimmer Cond. B. C. Osc.
38W		Trimmer Cond. H. F. Osc.
39	—22196	Resistor 20,000 Ohm ¼W
40	W —30805	Condenser .01 Mf. 400 V.
41	—30137	Resistor 3,500 Ohm ¼W.
	G1 —43724	Tel. Tun. Escutcheon
	W —43769	Pointer—Cabinet (547 only)
	W —43554	Knob (1 required) Small
	W —43625	Knob (2 required) Large
	W —43553	Rubber Mtg. Foot
	W —43552	Clamp—Speaker Plug
	W —43726	Celluloid Disc (547 only)

Crosley

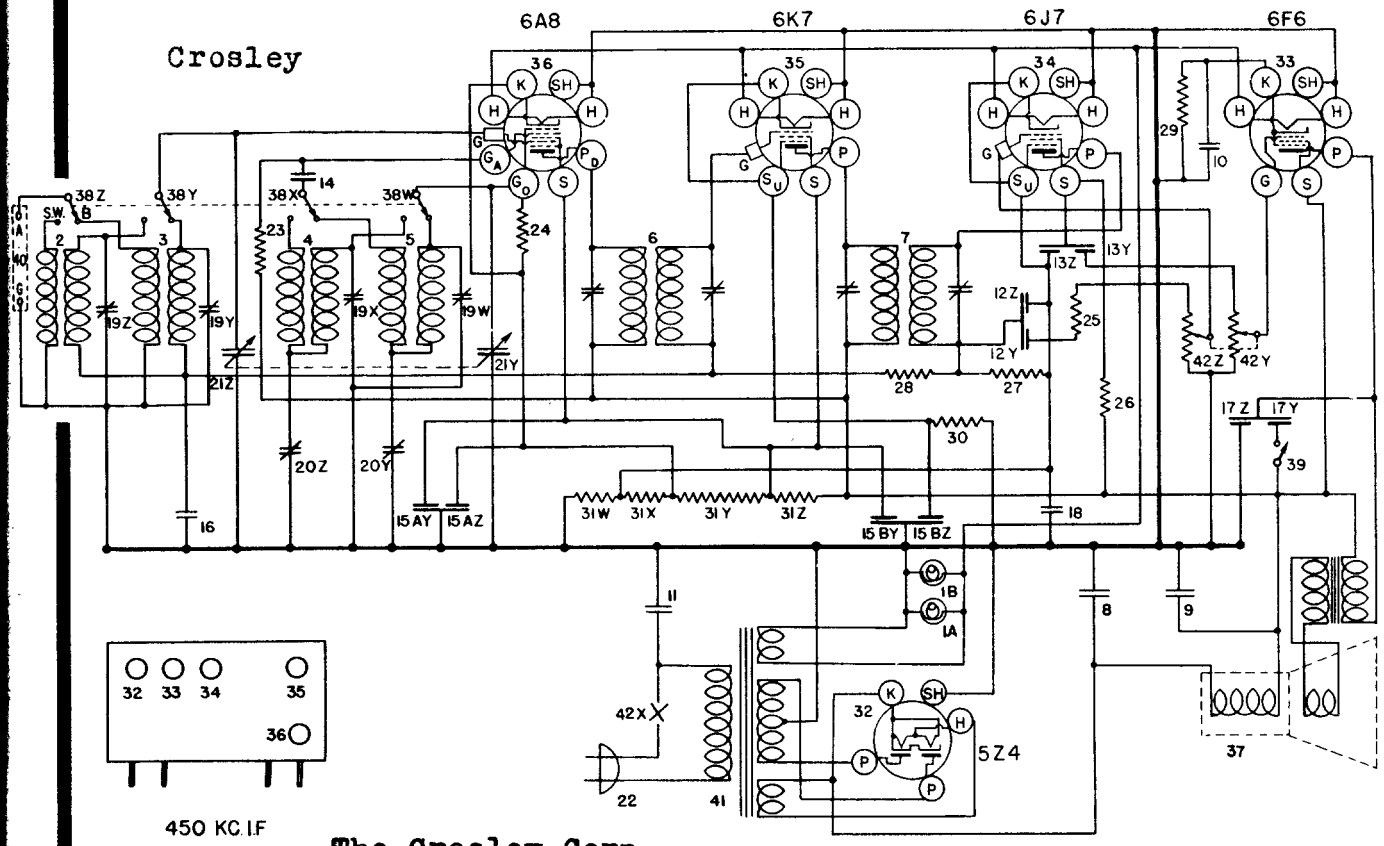

The Crosley Corp.

WIRING DIAGRAMS—MODELS 555 AND 5555

Item No.	Part No.	Description
1A	G6 —27134	Dial Light Assm.
1B	G6 —27134	Dial Light Assm.
2	G82 —32000	Ant. Coil, S. W. B.
3	G81 —32000	Ant. Coil, B. C. B.
4	G65 —32002	Osc. Coil, S. W. B.
5	G66 —32002	Osc. Coil, B. C. B.
6	G71 —32004	1st I. F. Assm.
7	G72 —32004	2nd I. F. Assm.
8	W —36055	Condenser, 35. Mfd. 400 Volt
9	W —36057	Condenser, 40. Mfd. 300 V.
10	W —36931	Condenser, 12 Mfd. 25 V.
11	W —30805	Condenser, 0.01 Mfd. 400 V.
12Z	W —30322A	Condenser, 0.00017 Mfd. 200 V.
12Y		Condenser, 0.006 Mfd. 200 V.
13Z	W —25537A	Condenser, 0.001 Mfd. 400 V.
13Y		Condenser, 0.03 Mfd. 400 V.
14	W —23191A	Condenser, 0.01 Mfd. 400 V.
15AZ	W —28623	Condenser, 0.02 Mfd. 200 V.
15AY		Condenser, 0.02 Mfd. 200 V.
15BZ	W —28623	Condenser, 0.02 Mfd. 200 V.
15BY		Condenser, 0.02 Mfd. 200 V.
16	W —27216	Condenser, 0.05 Mfd. 200 V.
17Z	W —35011	Condenser, 0.006 Mfd. 400 V.
17Y		Condenser, 0.03 Mfd. 400 V.
18	W —36541	Condenser, 0.02 Mfd. 160 V.
19Z, 19Y, 19V, 19W	W —37241A	4 Section Trimmer Cond.
20Z	G29 —33006	S. W. Osc. Series Padder
20Y		B. C. Osc. Series Padder
21Z, 21Y	G17 —33001	Var. Tuning Cond. Gang
	—37353C	Dial Assm. Complete
	—37158	Dial Glass
	—37156	Dial Pointer
	—37157	Pointer Screw

Item No.	Part No.	Description
	—37354	Dial Face only
22	B —33906A	A. C. Cord & Plug
23	—5370A	Resistor, 20,000 Ohm
24	—21237	Resistor, 60,000 Ohm
25	—21875	Resistor, 100,000 Ohm
26	—21455	Resistor, 300,000 Ohm
27	—33344	Resistor, 400,000 Ohm
28	—37245	Resistor, 1.5 Megohm
29	W —25291	Resistor, 500 Ohm 1½ W. (Flex)
30	W —28106	Resistor, 500 Ohm ½ W. (Flex)
31Z	W —37246A	Resistor, 10,000 Ohm Candohm
31Y		Resistor, 25,000 Ohm Candohm
31X		Resistor, 185. Ohm Candohm
31W		Resistor, 185. Ohm Candohm
32	G154—36400	Socket, 5Z4
33	G153—36400	Socket, 6F6
34	G157—36400	Socket, 6J7
35	G151—36400	Socket, 6K7
36	G156—36400	Socket, 6A8
37	331—CL—9	Speaker, (555)
	432—CJ—3M	Speaker, (5555) Console
	G3 —35696	Speaker Cable (5555)
38W To 38Z	—37247	Band Change Switch
39	W —36184A	Tone Control Switch
40	G1 —26719	Ant. & Grd. Terminal
41	G12 —28500	Power Trans. 60 Cy. 110 V.
	G13 —28500	Power Trans. 25 Cy. 110 V.
	G14 —28500	Power Trans. 25 Cy. 220 V.
42Z	—37395	Volume Control A. F. Grid
42Y		Volume Control Output Grid
42X		On-Off Switch

PARTS LIST—MODELS 666 and 5666

Figures in first column refer to parts in Diagrams.

Item No.	Part No.	Name
1	W —37922	6-8 V. Bulb, Dial Light
	G3 —37965	Socket Assy., Dial Light
2	G82 —32000	Coil Antenna—2350—7000 Kc.
3	G81 —32000	Coil Antenna—540—1725 Kc.
4	G 65—32002	Coil—2350—7000 Kc., Osc.
5	G 66—32002	Coil— 540—1725 Kc., Osc.
6	G118—32004	Coil—Assy., 1st I-F.
7	G 72—32004	Coil—Assy., 2nd I-F.
8	W —36055	Cond. 35 Mf. 400 V.
9	W —36057	Cond. 40 Mf. 300V.
10	W —30270	Cond. .001 Mf. 400V.
11	W —30805	Cond. .01 Mf. 400V.
12Z, 12Y	W —30322-A	Cond. .00017 Mf. / Cond. .006 Mf.
13	W —23615	Cond. .05 Mf. 400V.
14	W —23191-A	Cond. .01 Mf. 400V.
15 AZ, 15 AY	W —28623	Cond. .02 Mf. 400V. / Cond. .02 Mf. 400V.
15 BZ, 15 BY	W —28623	Cond. .02 Mf. 400V. / Cond. .02 Mf. 400V.
16	W —27216	Cond. .05 Mf. 200V.
17 Z, 17 Y	W —31052	Cond .004 Mf. 400V. / Cond. .05 Mf. 400V.
18	W —37732	Cond. .3 Mf. 160V.
19	W —37241	Cond. 4 Section Trimmer
20	G 31—33006	Cond. Series Trimmers
21	G 17—33001	Cond. Var. Tuning
	W —41736	Drive Unit,8Pt.Disc.Assy. (Model 666 —Only)
	W —41897	Dial-Calibrated Glass (Model 666 —Only)
	W —41737	Mtg. Brkt. Dial Glass R.H. (Model 666 —Only)
	W —41738	Mtg.Brkt.,Dial Glass,L.H. (Model 666 —Only)
	W —41739	Drive Unit (Model 5666 Only)
	B —42617	Dial (Calibrated) (Model 5666 Only)
	MG-14—41980	DialGlass,Mtg.Brkt.R.H. (Model 5666 Only)
	W —40798	DialGlass,Mtg.Brkt.,L.H. (Model 5666 Only)
	W —40797-A	DialGlass Retaining Brkt. (Model 5666 Only)
	W —42629	Pointer—Dial
	W —40795	Shaft—Pointer
	W —40909	Washer (Spring) Shaft
	W —41611	Ring-Shaft, Retaining
	B —42374-A	Mask (Metal) Dial
22	B —33906-A	Cord & Plug—Power
23	— 5370-A	Resistor, 20,000 Ohm 1W
24	—35928	Resistor, 60,000 Ohm ¼W
25	—21875	Resistor, 100,000 Ohm. ½W
26	—35929-C	Resistor, 150,000 Ohm. ½W
27	—33344	Resistor, 400,000 Ohm. ¼W
28	—37245-C	Resistor, 1.5 Megohm ¼W
29	—36316	Resistor, 2,700 Ohm. ½W
30	W —28106	Resistor, 500 Ohm. ½W. Flex.
31Z, 31Y, 31X	W —37246	Resistor,1,000 Ohm / Resistor,2,000 Ohm / Resistor,185-185 Ohm (Candohm)
32	G47 —28807	Socket—Type 6A7
33	G75 —28807	Socket—Type 6D6
34	G80 —28807	Socket—Type 76
35	G41 —28807	Socket—Type 75
36	G90 —28807	Socket—Type 6B5
	W —27981	Base—Tube Shield
	W —40911	Shield—Tube
37	244—BL—9	Speaker, "B" Spec. 50A-2
	—42928	Cone Assy., For above Speaker
	—41473	Output Trans., For above Speaker
	632—CJ—3	Speaker, "M" Spec. 1-D-610
	—42879	Cone Assy., For above Speaker
	—42880	Field Coil, For above Speaker
	—42881	Output Trans., For above Speaker
38	—37247	Switch, Band Sel.
39	W—36184-A	Switch, Tone Con.
40	G1 —26719	Terminal Board, Ant. & Grid
41	—41978	Transformer, 110V.—60 Cy. Power
42Z, 42Y, 42X	—37395	Volume Control (3 Meg.) 1st A-F / Line Switch Grid / Volume Control (1 Meg.) Output Grid
43	NONE	
44	—35601	Resistor, 300 000 Ohm ¼ W. Output Grid to Grd.*
	B —40590	Escutcheon, 666)
	W —42345	Escutcheon, (5666)
	D —28	Escutcheon Mtg. Screws
	W —37339	Knob, (2) V.C.&S.S.
	W —37341	Knob, (2) T. C. & B. S. W
	—36297	Volume Control, 3 Meg.*
	AG	Cabinet Model 666
	MA	Cabinet Model 5666

*May be used in place of Dual Volume Control.

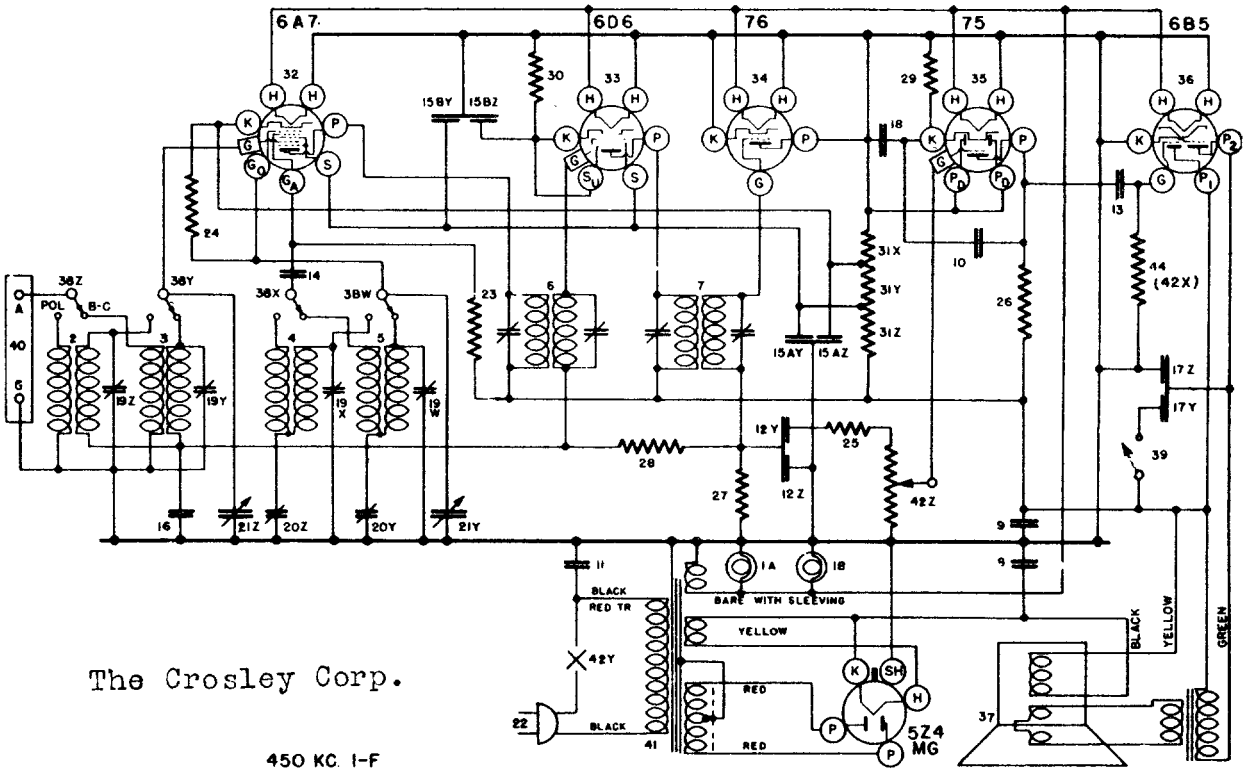

WIRING DIAGRAM—MODELS 666 AND 5666

Crosley Model 706

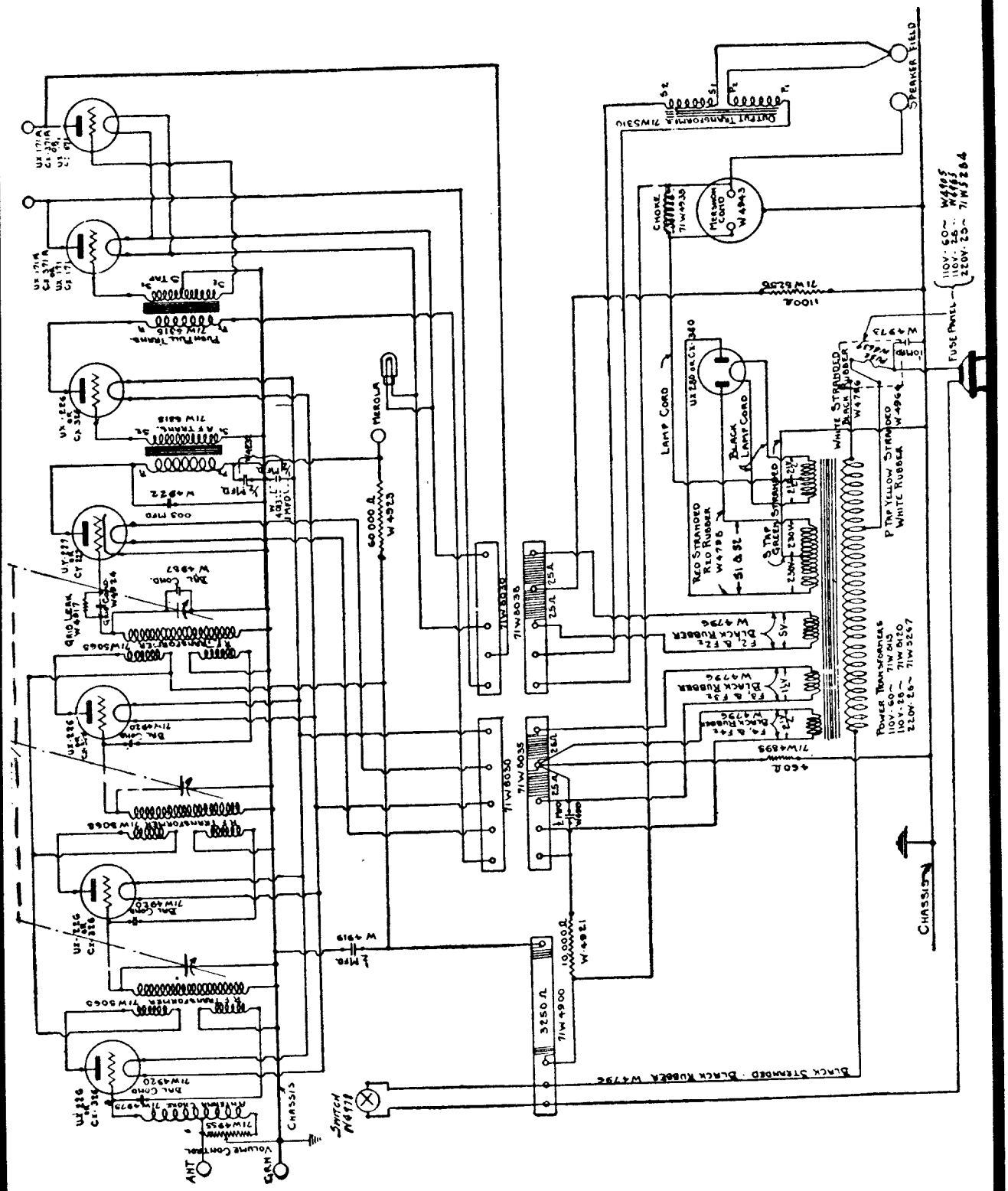

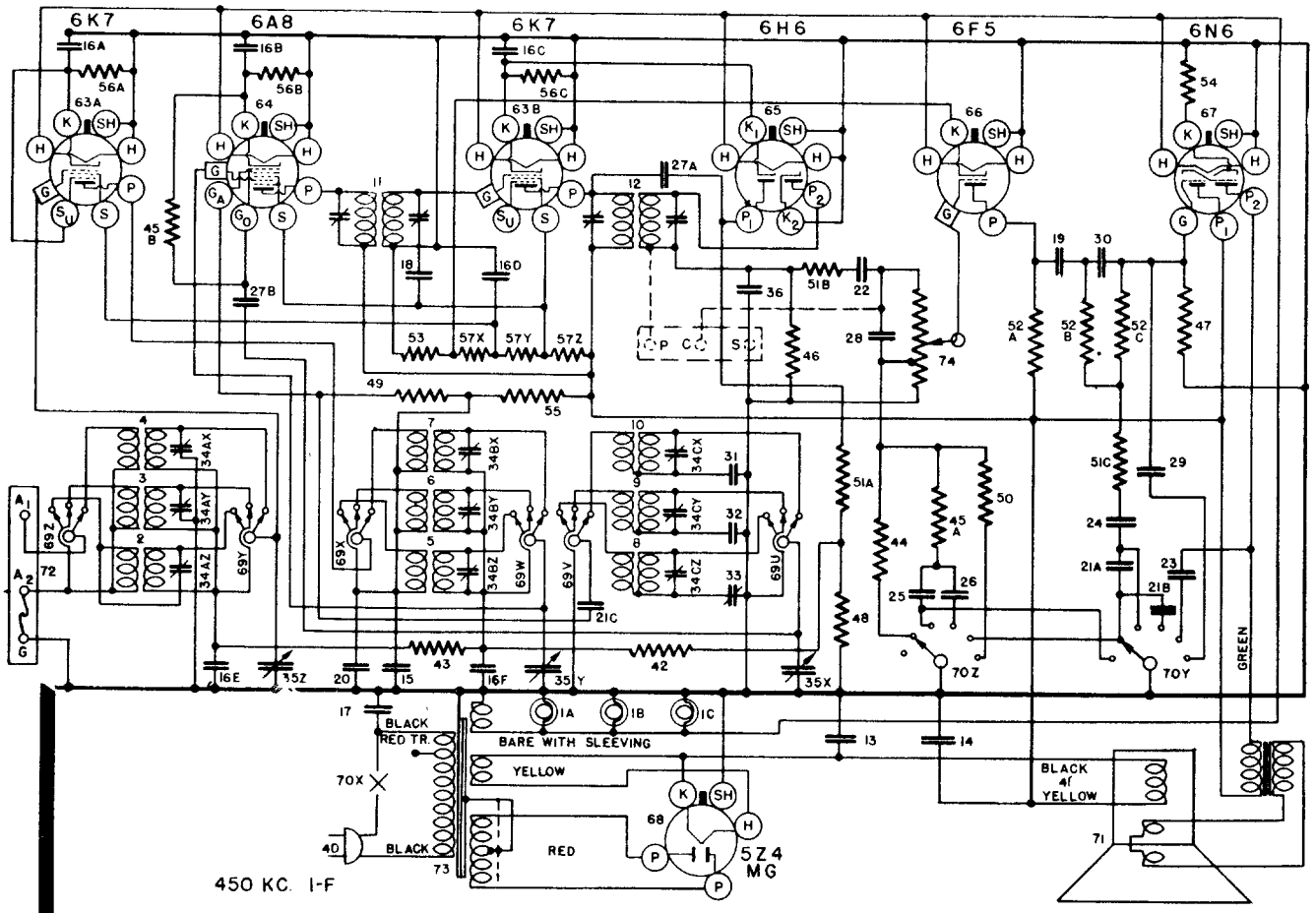

WIRING DIAGRAM—MODEL 726

The Crosley Corp.

PARTS LIST—MODEL 726

Figures in first column refer to parts in Diagram

Item No.	Part No.	Description
1ABC	W —37922	Dial Light
	G3 —37965	Socket Assy. Dial Light
2	G110—32006	Coil Ant. 540-1800 Kc.
3	G111—32000	Coil Ant. 1800-6000 Kc.
4	G112—32000	Coil Ant. 6-18 Mc.
5	G76 —32001	Coil R. F. 540-1800 Kc.
6	G89 —32001	Coil R. F. 1800-6000 Kc.
7	G90 —32001	Coil R. F. 6.-18 Mc.
8	G115—32002	Coil Osc. 590-1800 Kc.
9	G121—32002	CoilOsc. 1800-6000 Kc.
10	G122—32002	Coil Osc. 6.-18 Mc
11	G121—32004	1st. IF. Assy.
12	G120—32004	2nd IF. Assy.
13	W —36055	Condenser, 35Mf. 400V.
14	W —36067	Condenser, 40Mf. 300V
15	W —41081	Condenser 16Mf. 250V.
16A	W —36541	Condenser, .02Mf. 160V
TO		
16F	W —36541	Condenser .02Mf. 160V.
17	W 30805	Condenser, .01Mf. 400V
18	W —35936	Condenser, .05Mf. 200V.
19	W —327001	Condenser, .03Mf. 400V.
20	W —32378	Condenser, .01Mf. 400V.
21A	W 35139	Condenser, .004Mf. 400V
21B	W 35139	Condenser, .004Mf. 400V.
21C	W .35139	Condenser, .004Mf. 400V.
22	W 29621	Condenser, .02Mf. 200V.
23	W 23615	Condenser, .05Mf. 400V
24	W 30323	Condenser, .01Mf. 200V.
25	W 29619	Condenser, .10Mf. 200V
26	W 25435	Condenser, .003Mf. 400V.
27A	G2 34002	Condenser, .0001Mf. (Mica)
27B	G2 34002	Condenser .0001Mf. (Mica)
28	G8 34002	Condenser, .00001Mf. (Mica)
29	G3 34002	Condenser, .0005Mf. (Mica)
30	G6 34002	Condenser, .000025Mf. (Mica)
31	G20 34000	Condenser, 49100Mmf. (Mica)
32	G7 34000	Condenser, 1450Mmf. (Mica)
33	40769	Condenser, B. C. Osc. Series Trim
34	W 35951	Condenser, 3 Section Trimmer
35	G52 33002	Condenser, 3 Gang Var. Tuning
	MG33 42255	Dial Drive Assy.
	C 42491	Dial Glass (Calibrated)
	42300	Drive Unit
	42597	Dial Mask (Cardboard)
	W 42180	Dial Hand Pointer
	41114	Dial Hand, Time Log
	W 40496	Pointer Mtg. Screw
36	G1 34002	Condenser, .00025 Mf. (Mica)
37	W 30270	Condenser .001 Mf. 400V
40	B —33906A	Power Cord & Plug
41	G3 35696	Cable, Speaker
42	37245	Resistor, Meg. Ohm ¼ W.
43	35600	Resistor, 100,000 Ohm ¼ W.

Item No.	Part No.	Description
44	—36319	Resistor, 75,000 Ohm ¼ W.
45A	—35928	Resistor, 60,000 Ohm ¼ W.
45B	—35928	Resistor, 60,000 Ohm ¼ W.
46	—36321	Resistor, 400,000 Ohm. ¼ W.
47	—38623	Resistor 750,000 Ohm ¼ W.
48	—36322	Resistor, 500,000 Ohm. ¼ W.
49	—37377	Resistor, 20,000 Ohm 1 W.
50	—35929	Resistor, 150,000 Ohm ¼ W
51A	—35601	Resistor, 300,000 Ohm ¼ W.
51B	—35601	Resistor, 300,000 Ohm ¼ W
51C	—35601	Resistor, 300,000 Ohm ¼ W
52A	—35930	Resistor, 200,000 Ohm ¼ W.
52B	—35930	Resistor, 200,000 Ohm. ¼ W.
52C	—35930	Resistor, 200,000 Ohm ¼ W.
53	W —30127	Resistor, 450 Ohm. ½ W. Flex
54	W —23012A	Resistor, 40 Ohm ¾ W. Flex.
55	—6706	Resistor, 3500 Ohm 1 W.
56A	W —28589	Resistor, 350 Ohm ½ W. Flex.
56B	W —28589	Resistor, 350 Ohm. ½ W. Flex.
56C	W —28589	Resistor, 350 Ohm. ½ W. Flex
57		Resistor, 16,500 Ohm.
57Y	W —37781	Resistor, 4,000 Ohm. (Cand. Ohm.
57X		Resistor, 18,500 Ohm.
63A	G151—36400	Socket Type 6K7
63B	G151—36400	Socket Type 6K7
64	G156—36400	Socket Type 6A8
65	G155—36400	Socket Type 6H6
66	G158—36400	Socket Type 6F5
67	G165—36400	Socket Type 6N6
68	G154—36400	Socket Type 5Z4
69	C —40910A	Band Selector Switch
70Z		Fidelity Switch
70Y	B —42387C	Fidelity Switch
70X		Line Switch
71	—645CJ3	Speaker "M" Spec. 1D640
	—42883	Cone Assy. (For Above Speaker)
	40306	Field Coil (For Above Speaker)
	—42885	Outp't Trans. (For Above Speaker)
72	G27 —26719	Ant. & Gnd. Terminal Assy.
73	—42260	Power Trans. 60 Cy. 110 V.
	42261	Power Trans. 25 Cy. 110 V.
74	—42501	Volume Control 3 Meg
		Misc. Parts
	C —42045	Escutcheon
	B —42043	Escutcheon Rubber
	D — 30	Screws - Escutcheon Mtg.
	C —42014	Lens - Escutcheon
	W —40230P	Emblem
	W 32620	Nut - Emblem Mtg.
	W 38117	Rubber Mtg. Foot
	W 37339	Knob (2 Req.)
	W 40192B	Knob, B. S. Sw. (1 Req.)
	W 42490	Knob, S. S. (1 Req.)
	6-NG	Cabinet

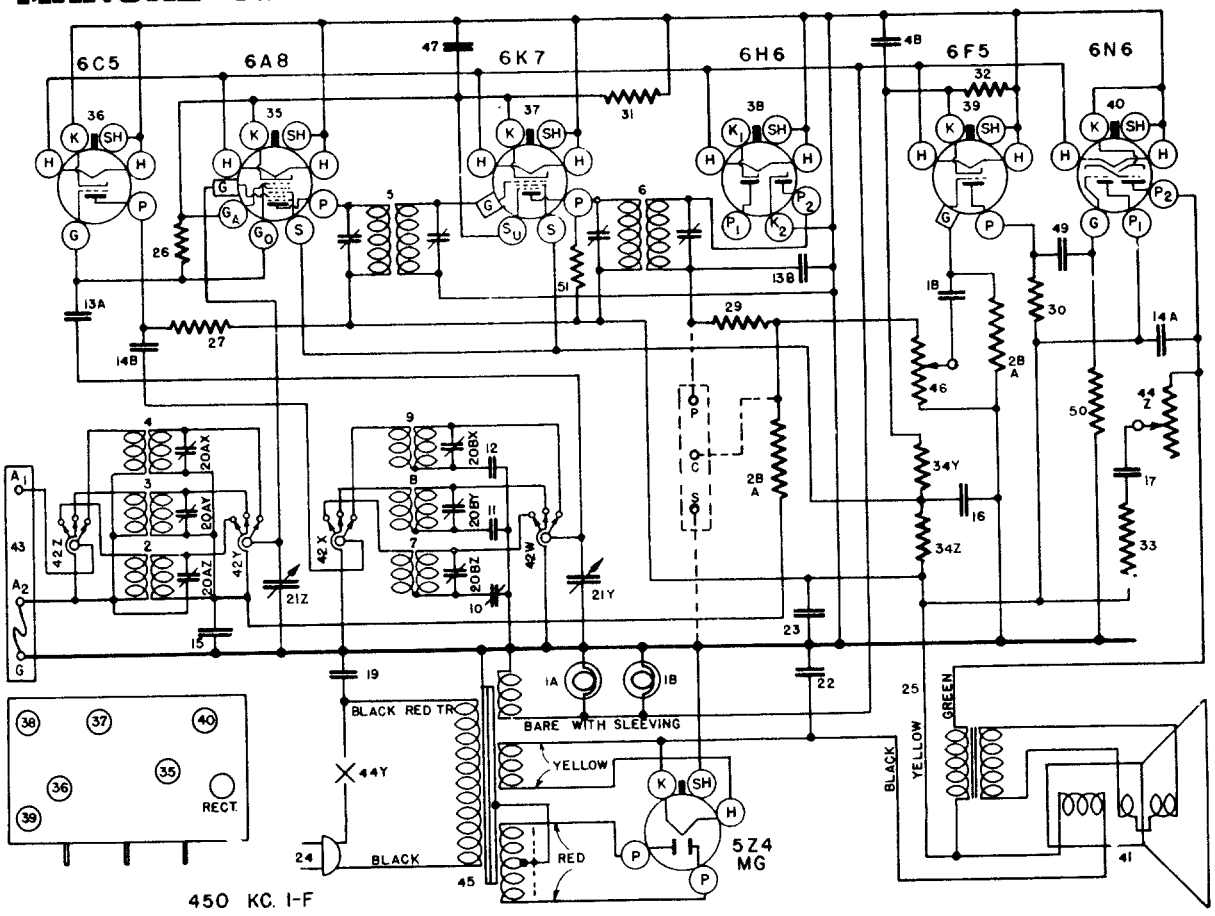

WIRING DIAGRAM—MODEL 716

Item No.	Part No.	Name
-AB	W —37922	Bulb 6-8V., Dial Light
	G3 —37965	Socket Assy., Dial Light
2	G120 —32000	Coil, Ant. (540-1800 Kc.)
3	G119 —32000	Coil Ant. (1800 6000 Kc.)
4	G121 —32000	Coil, Ant. (5800-18000 Kc.)
5	G122 —32004	Coil Assy. 1st I-F (450Kc.)
6	G123 —32004	Coil Assy. 2nd I-F (450Kc.)
7	G112 —32002	Coil. Osc. (540-1800 Kc.)
8	G111 —32002	Coil. Osc. (1800-6000 Kc.)
9	G123 —32002	Coil Osc. (5800-18000 Kc.)
10	—40769	Cond. 400-500 Mmf.
11	G7 —34007	Cond. 1750 Mmf.
12	G 8 —34007	Cond. 4350 Mmf.
13A	G 2 —34002	Cond., .0001Mf.(Molded)
13B	G 2 —34002	Cond., .0001 Mf.(Molded)
14A	W —35139	Cond., .004 Mf. 400V.(Tub.)
14B	W —35139	Cond., .004Mf.400V.(Tub.)
15	W —35936	Cond., .05Mf.200V.(Tub.)
16	W — 24049-B	Cond., .1Mf.200V.(Tub.)
17	W —37873	Cond., .1Mf. 400V.(Tub.)
18	W —30488	Cond., .02Mf.400 V.Tub.)
19	W —30805	Cond., .01 Mf.400V.(Tub.)
20	W —35951	Cond.-3 Section Trimmer
21	G21 —33001	Cond.-2 Section Tuning
	B —42142-A	Dial-Calibrated Glass
	—42346	Drive Unit
	B —42338	Mask-Metal
	—41145	Pointer-Dial
	W —40486	Screw, Pointer Mtg.
	MG27—42151	Dial Drive Complete
	—41582	Cable, Drive
22	W —36055	Cond., 35Mf.400V.(Elect.)
23	W —36057	Cond., 40Mf.300V.(Elect.)
24	B —33906-A	Cord and Plug, Power
25	G4 —35696	Speaker Cable
26	—40757	Resistor, 50,000 Ohm ¼W. (Car.)
27	W —37987	Resistor, 15,000 Ohm 1W (WireWound)
28A	—36688	Resistor, 3 Megohm ¼W. (Car.)
28B	—36688	Resistor, 3 Megohm ¼W. (Car.)
29	—21455	Resistor, 300,000 Ohm ¼W. (Car.)
30	—35930	Resistor, 200,000 Ohm ¼W. (Car.)
31	W —21964	Resistor, 165 Ohm ¾W. (Flex.)
32	W —35457	Resistor, 210 Ohm ¾W. (Flex.)
33	W —27503	Resistor, 1400 Ohm ¾W. (Flex.)
34Z	W —32301	Resistor, 10,000 Ohm Candohm
34Y		Resistor, 15,000 Ohm Candohm
35	G156 —36400	Socket Type 6A8
36	G152 —36400	Socket Type 6C5
37	G151 —36400	Socket Type 6K7
38	G155 —36400	Socket Type 6H6
39	G158 —36400	Socket Type 6F5
40	G165 —36400	Socket Type 6N6
41	332—BJ3	Speaker "M" Spec. 1-D-390
	—41638	Cone Assy. for "M"332BJ3
	—40275	Field Coil for "M"332BJ3
	—41639	Output Trans. for "M" 332BJ3
42	—40770-A	Switch, Band Selector
43	G27 —26719	Terminal Board, Antenna & Grd.
44Z	—37908	Tone Control, 100,000 Ohm
44Y		Switch, Line
45	—41978	Transformer, 110V. 60 Cy.
	— 42149	Transformer, 110V. 25 Cy.
	—42150	Transformer, 220V. 25 Cy.
46	—37967	Volume Control 1Megohm
47	W — 29910-A	Cond., .25Mf.200V.(Tub.)
48	W —28621	Cond., .02Mf.200V.(Tub.)
49	W —35758	Cond., .008, 400V. (Tub.)
50	—23785	Resistor, 500,000 Ohm ¼W. (Car.)
	W —42345	Escutcheon
	D —28	Screw Escutcheon Mtg.

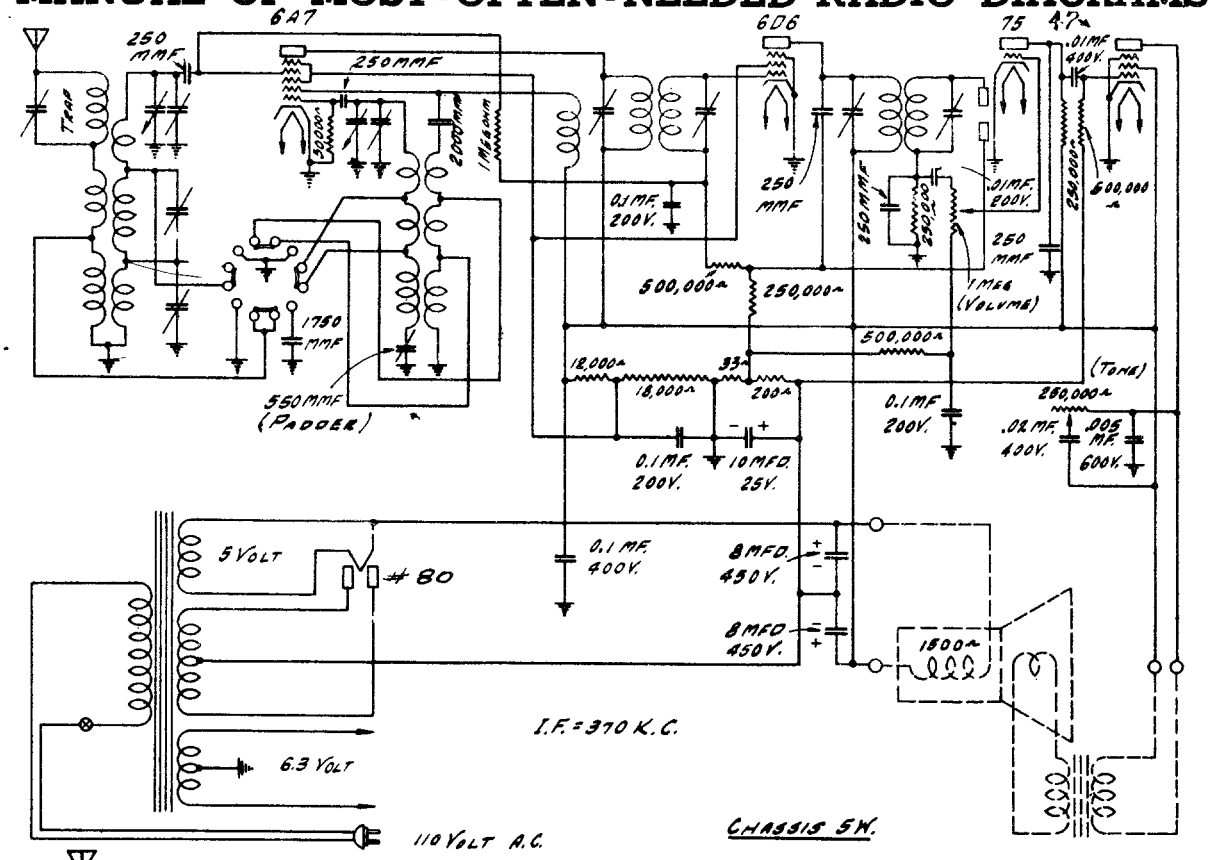

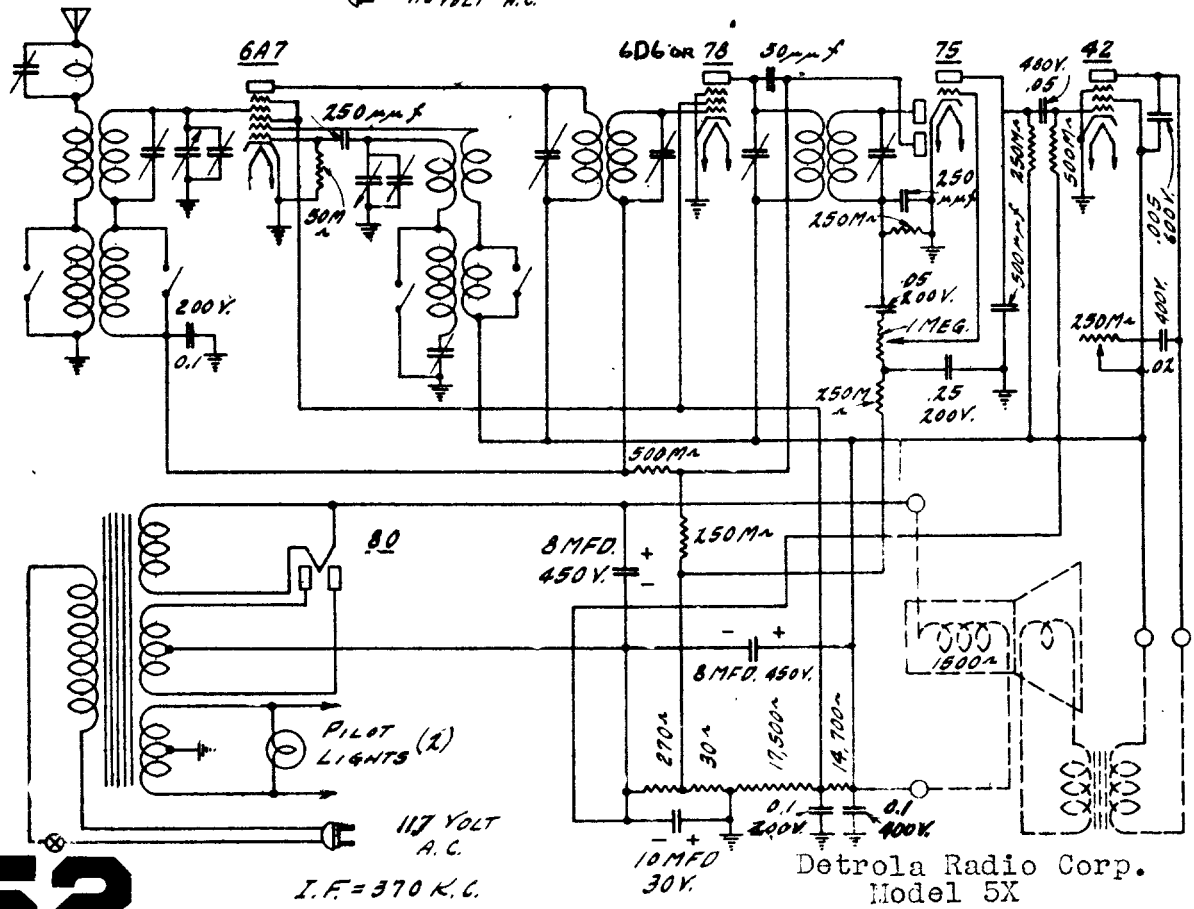

Detrola Radio Corp.
Model 5X

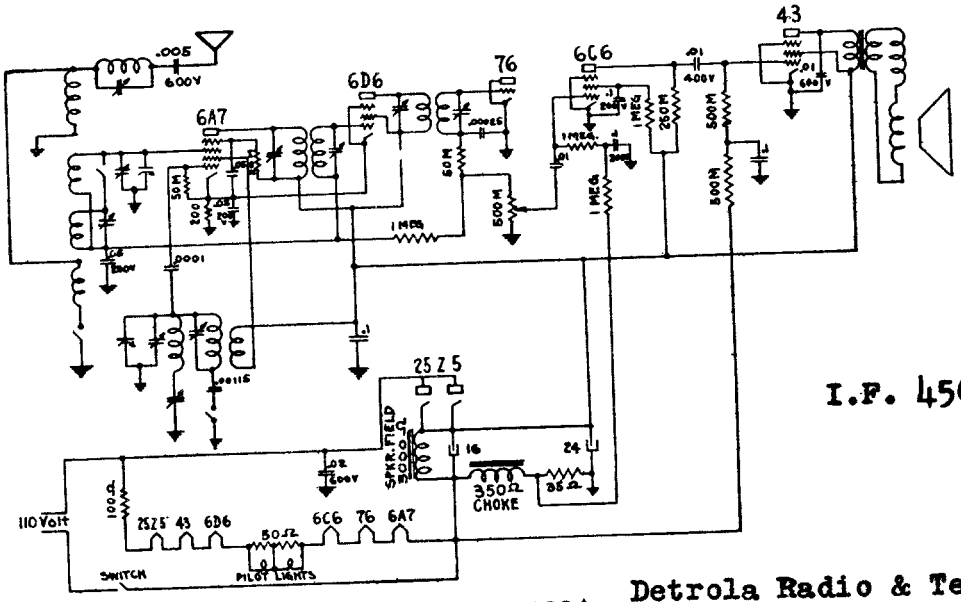

I.F. 456 KC.

MODEL 100A

Detrola Radio & Tel. Corp.

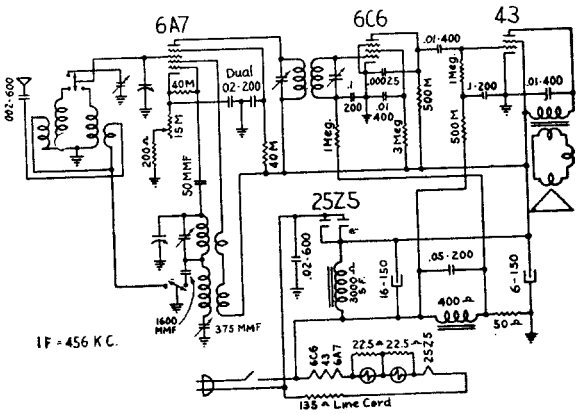

IF = 456 KC.

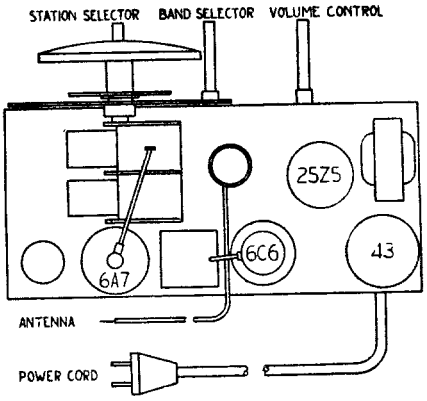

MODEL 134

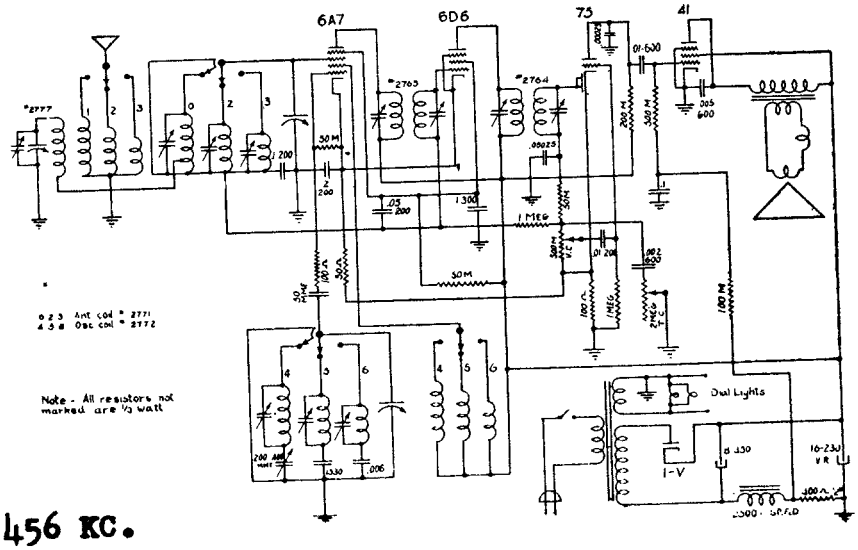

I.F. 456 KC.

MODEL 106

Emerson Radio

MODELS 107 and 111

Chassis Model U6A

L1	456 kc adjustable wave-trap
L2	Filter choke—500 ohms
T1, T2, T3	Three-band antenna coil assembly
T4, T5, T6	Three-band oscillator coil assembly
T7	456 kc first i-f transformer
T8	456 kc second i-f transformer
R1, R8	50,000 ohm, ¼ watt carbon resistor
R2	500 ohm, ½ watt wire-wound resistor
R3, R7, R11	1 megohm, ¼ watt carbon resistor
R4	30,000 ohm, ¼ watt carbon resistor
R5, R17	10,000 ohm, ¼ watt carbon resistor
R6	850 ohm, ½ watt wire-wound resistor
R9, R13	100,000 ohm, ¼ watt carbon resistor
R10, S2	Volume control with line switch—0.5 megohms
R12	200,000 ohm, ¼ watt carbon resistor
R14	Tone control—0.25 megohms
R15, R16	500,000 ohm, ¼ watt carbon resistor
R18	5,000 ohm, ¼ watt carbon resistor
R19	Wire-wound ballast resistor—130 ohms
C1, C2	Two-gang variable condenser
C3, C4, C21, C22, C25	0.1 mf, 200 volt tubular condenser
C5	0.0001 mf mica condenser
C6, C7	Dual adjustable padding condenser C6—250 to 550 mmf. C7—800 to 1400 mmf.
C8, C9, C10, C11, C12, C13, C14	Seven-section condenser block C8—0.1 mf, 200 v. C12—0.1 mf, 200 v. C9—0.1 mf, 200 v. C13—0.1 mf, 200 v. C10—0.2 mf, 200 v. C14—0.1 mf, 200 v. C11—0.05 mf, 200 v.
C15	0.02 mf, 200 v. tubular condenser
C16, C20, C24	0.00025 mf mica condenser
C17, C18	0.01 mf, 200 v. tubular condenser
C19	0.006 mf, 200 v. tubular condenser
C23, C31	0.001 mf mica condenser
C26	0.25 mf, 200 v. tubular condenser
C27, C28, C29	4, 8 and 16 mf electrolytic filter condenser block C27—4 mf, 150 v. C29—16 mf, 150 v. C28—8 mf, 150 v.
C30	Tubular 4 mf, 150 v. electrolytic condenser
C32	0.005 mf mica condenser

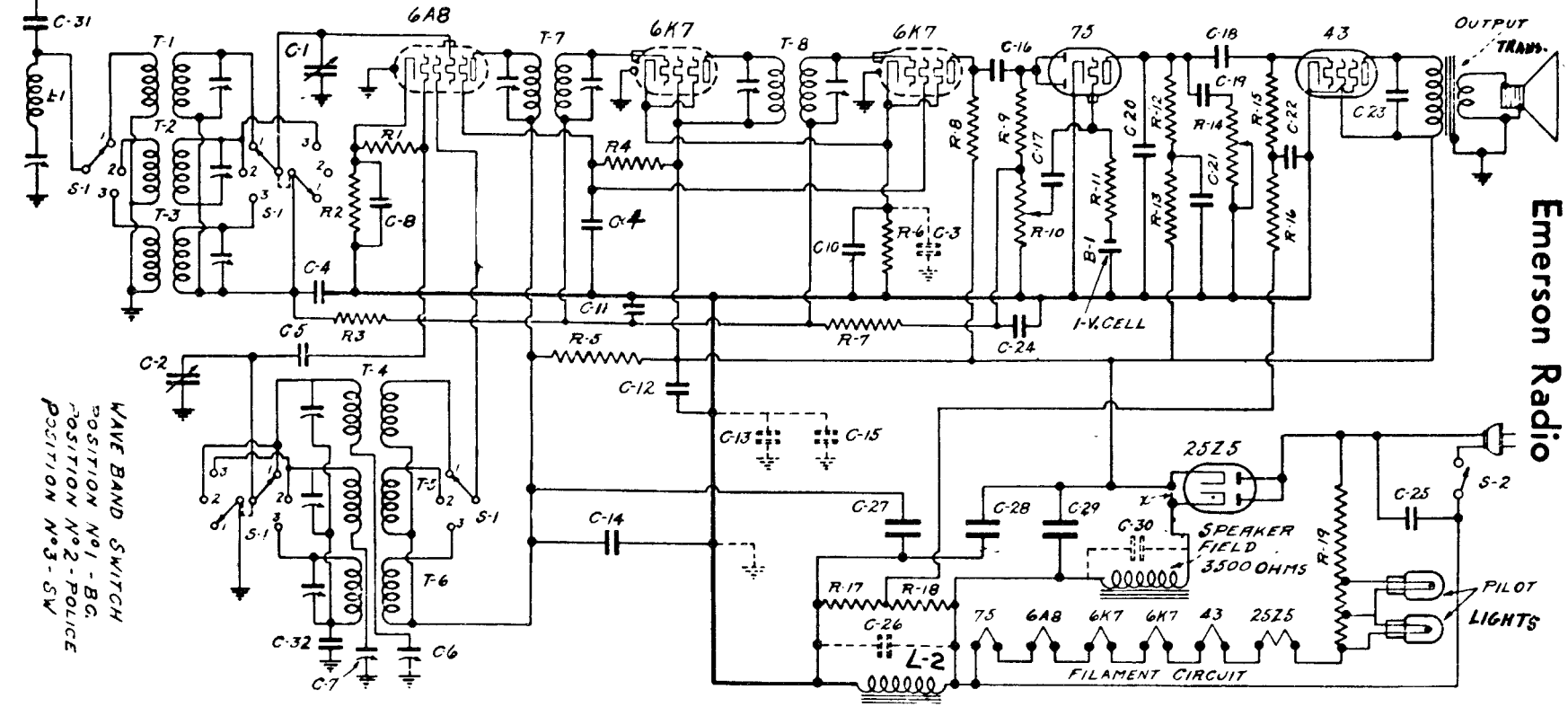

Thomas A. Edison, Inc.

Models: R6, R7

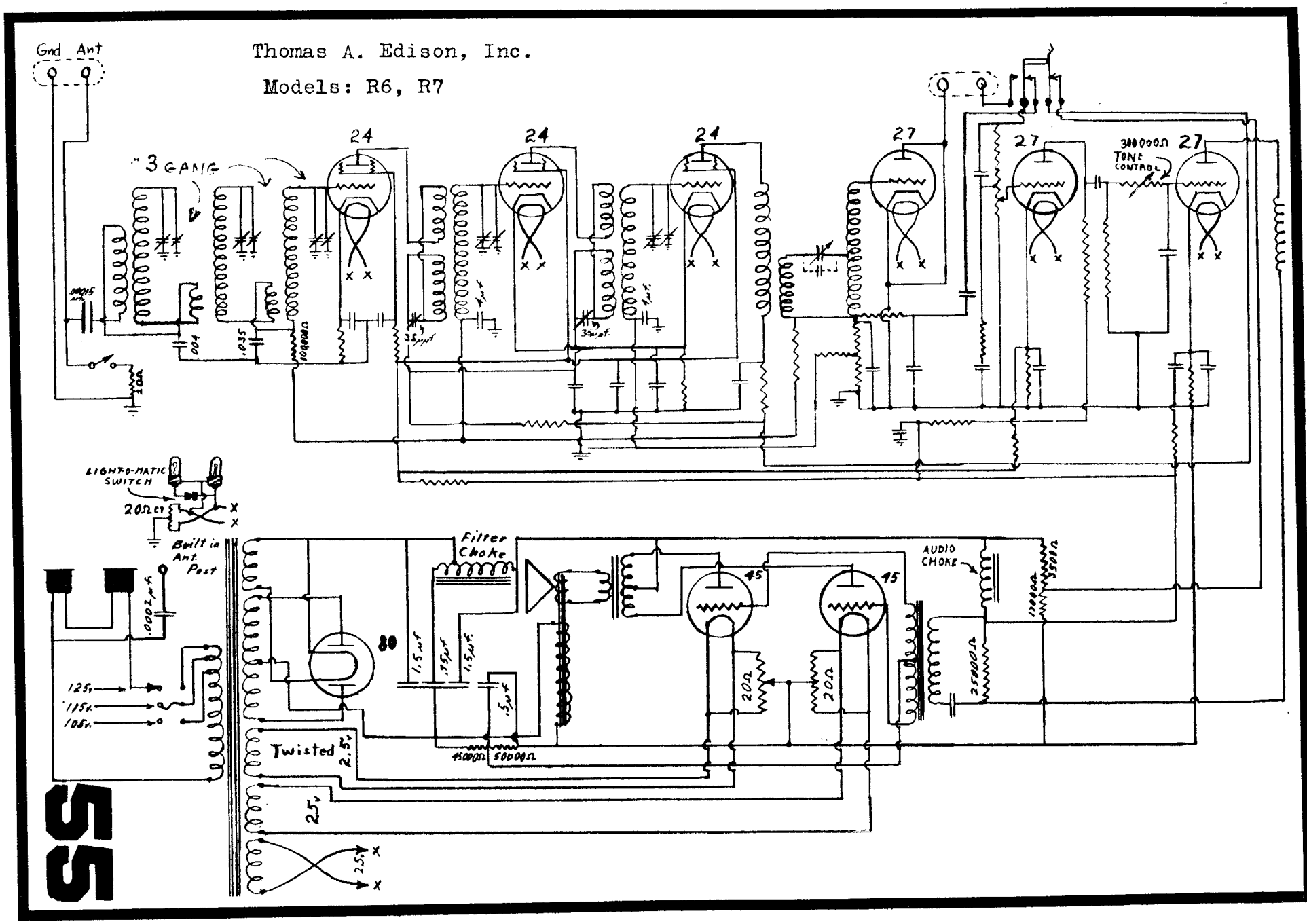

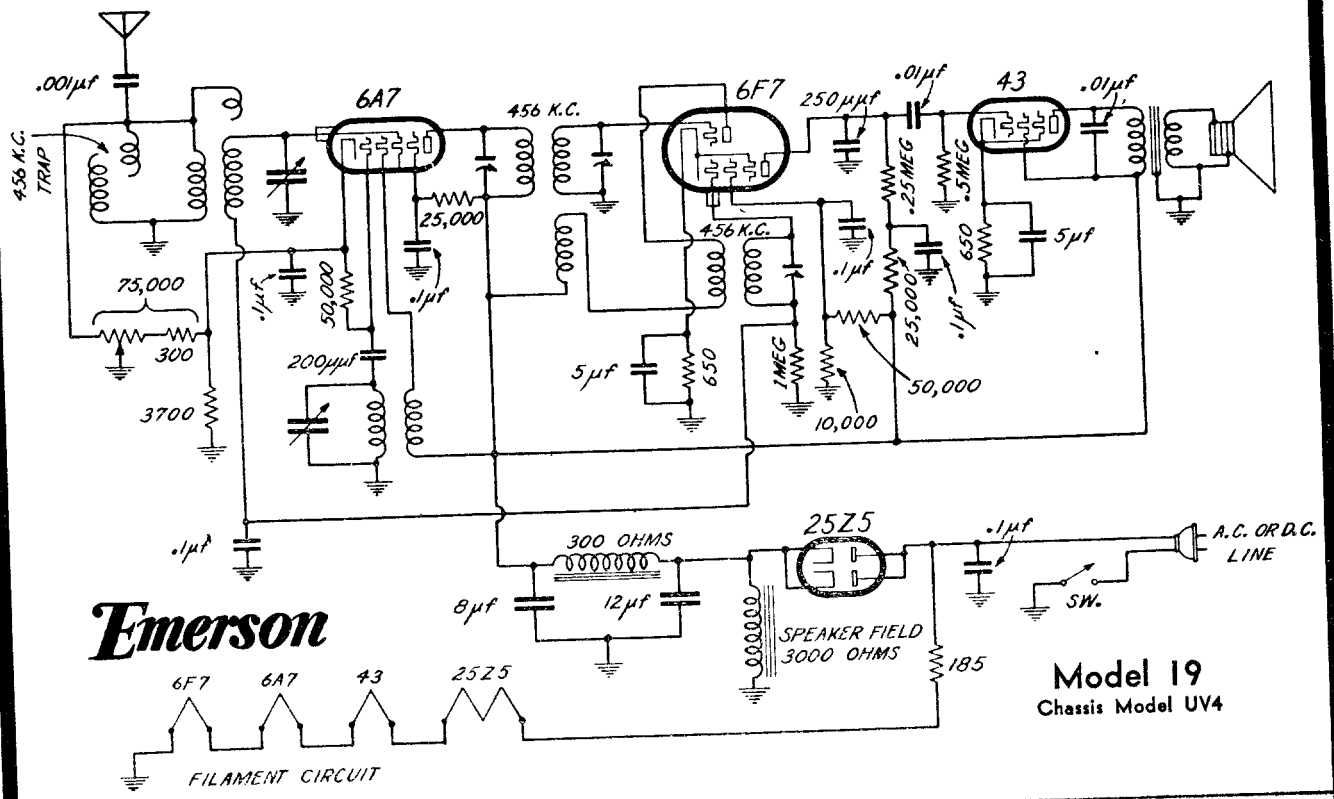

Emerson

Model 19
Chassis Model UV4

Emerson Radio and Phonograph Corp.

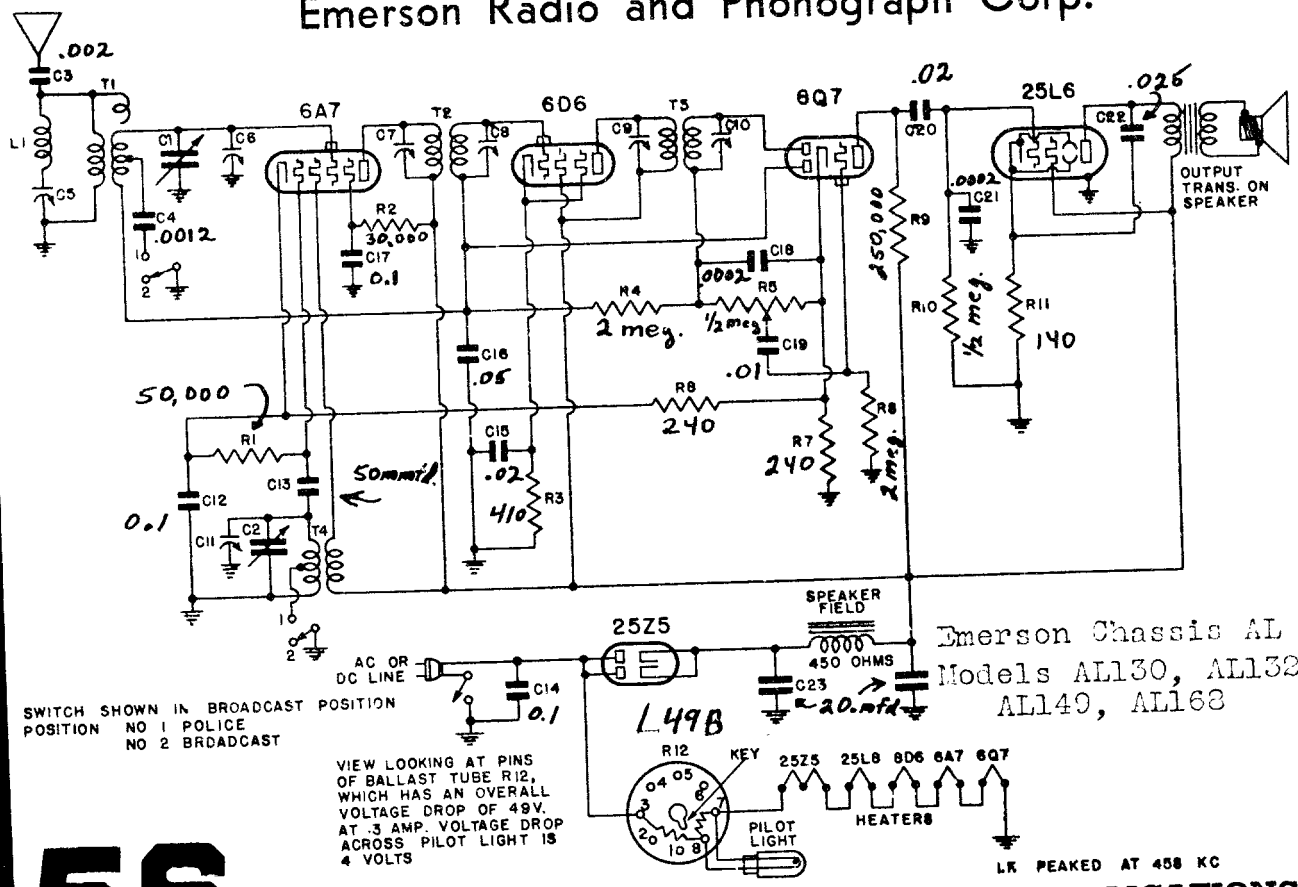

Emerson Chassis AL
Models AL130, AL132
AL149, AL168

SWITCH SHOWN IN BROADCAST POSITION
POSITION NO 1 POLICE
NO 2 BROADCAST

VIEW LOOKING AT PINS OF BALLAST TUBE R12, WHICH HAS AN OVERALL VOLTAGE DROP OF 49V. AT .3 AMP. VOLTAGE DROP ACROSS PILOT LIGHT IS 4 VOLTS

Emerson Radio and Phonograph Corp.

Models AD-108, 110, 125

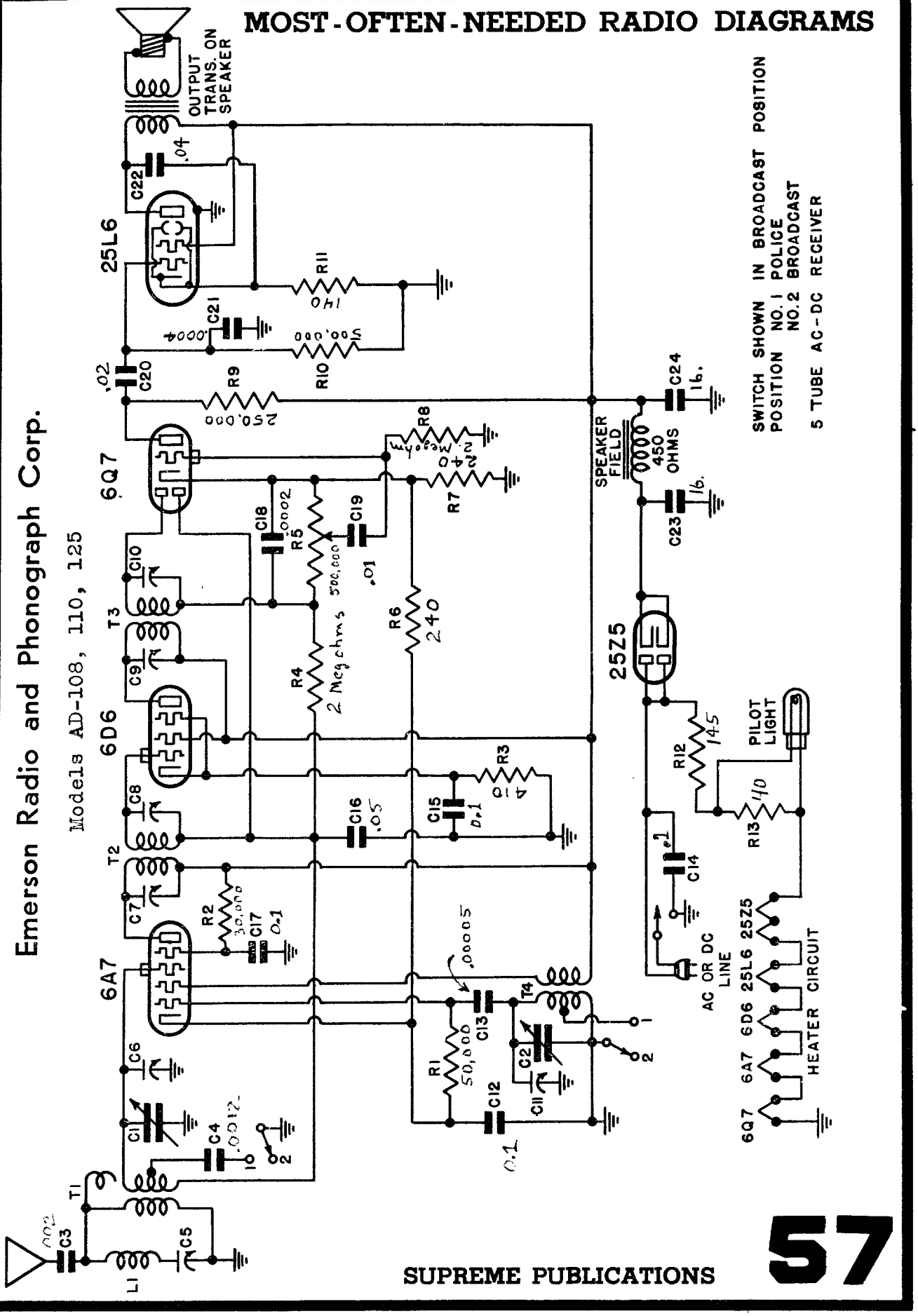

Fairbanks-Morse Radio, Chassis Model 9A

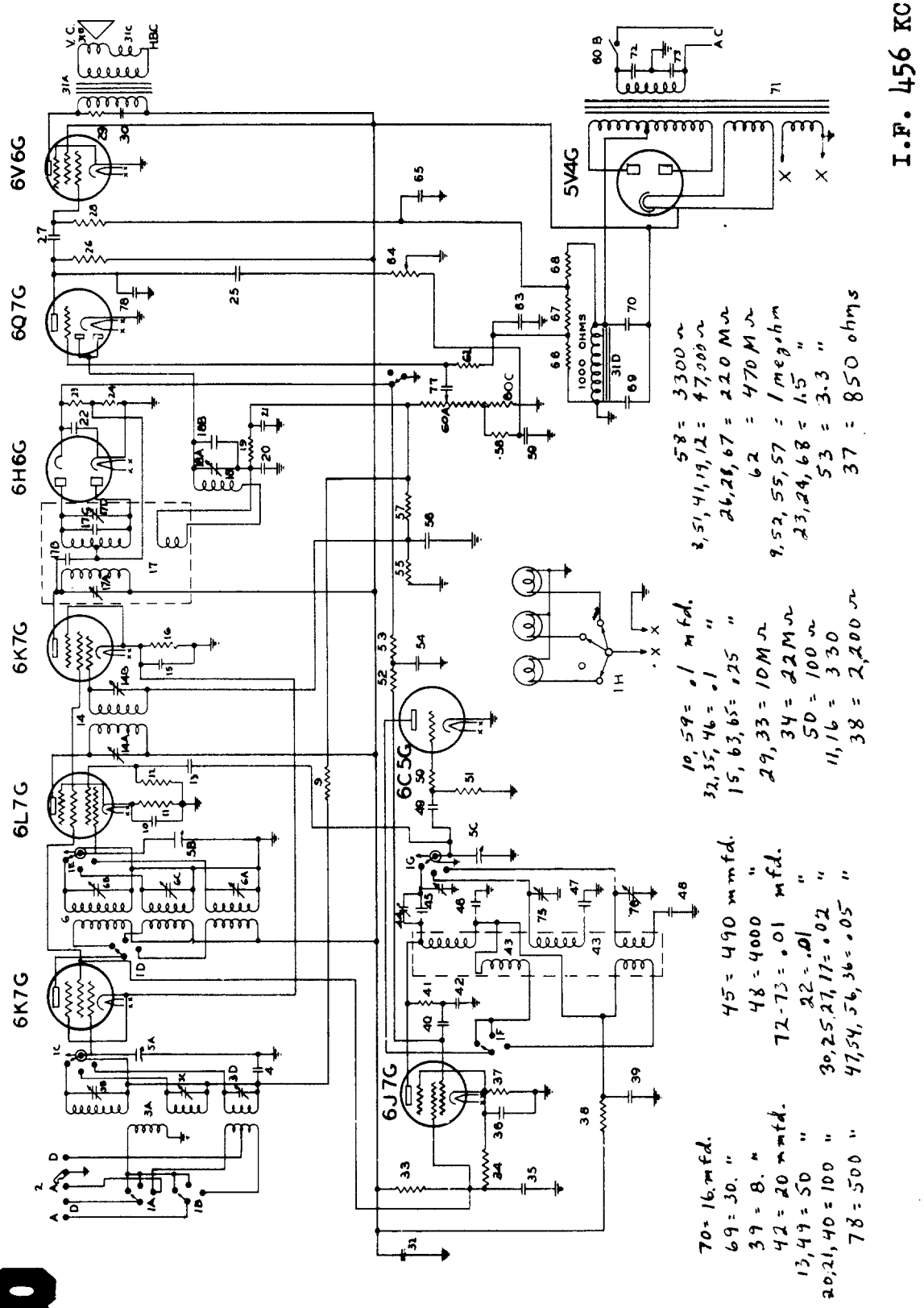

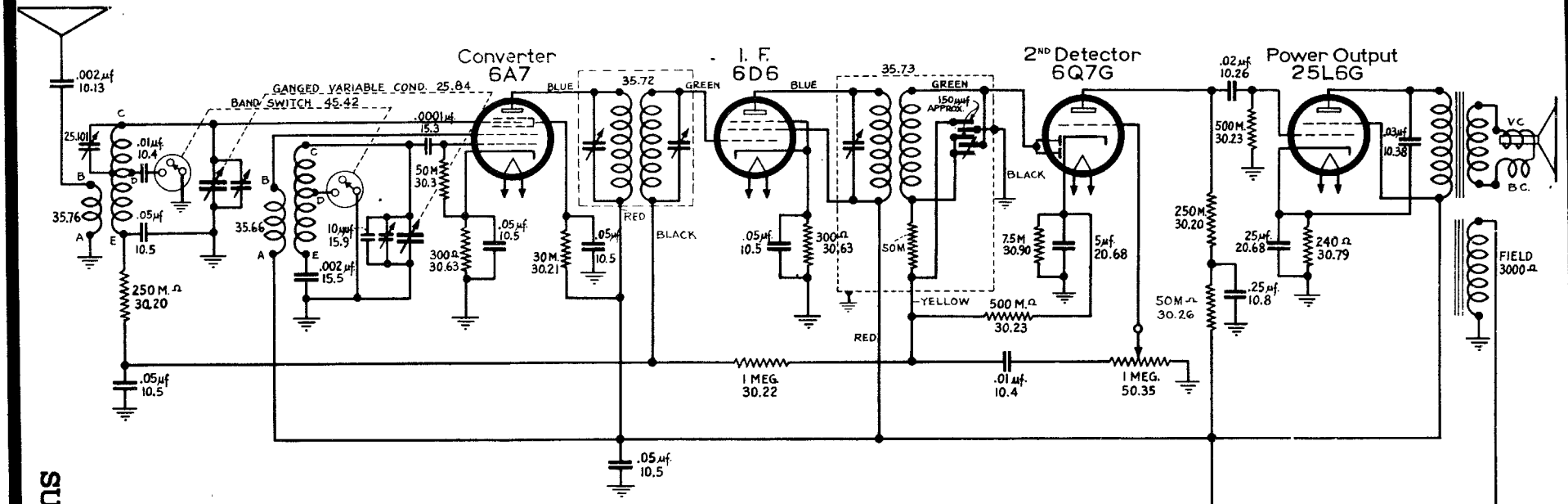

Note
⏚ = chassis
Band sw. shown in B.C. pos.
M = thousand

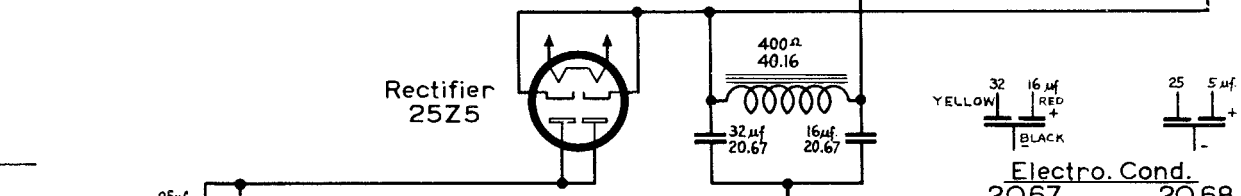

Electro. Cond.
20.67 20.68

35.76 Ant. Coil	35.66 Osc. Coil
A-B = PRI. = 36 Ω	A-B = TICKLER = 2 Ω
C-D = S.W. SEC. = .97 Ω	C-D = S.W. SEC. = 2.55 Ω
C-D-E = B.C. SEC. = 2.4 Ω	C-D-E = B.C. SEC. = 7 Ω
35.72 1ST I. F.	35.73 2ND I. F.
PRI. & SEC. = 28 Ω	PRI. & SEC. = 28 Ω

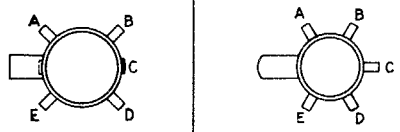

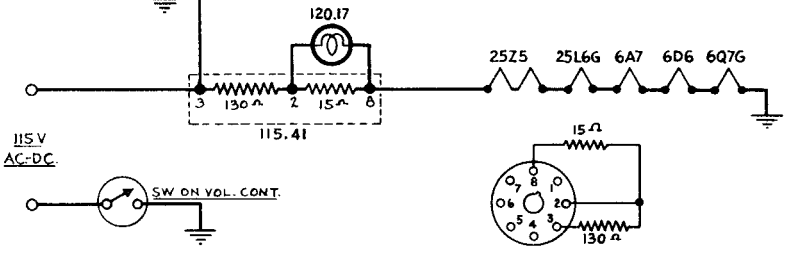

Bottom View of Ballast
115.41

I. F. Peak = 456 Kc.

FADA RADIO & ELECTRIC CO. LONG ISLAND CITY, N.Y.	
MODEL 360	
DRAWN BY HP	DATE 8-31-37
CHECKED BY B 9/9/37	APPROVED BY FAA

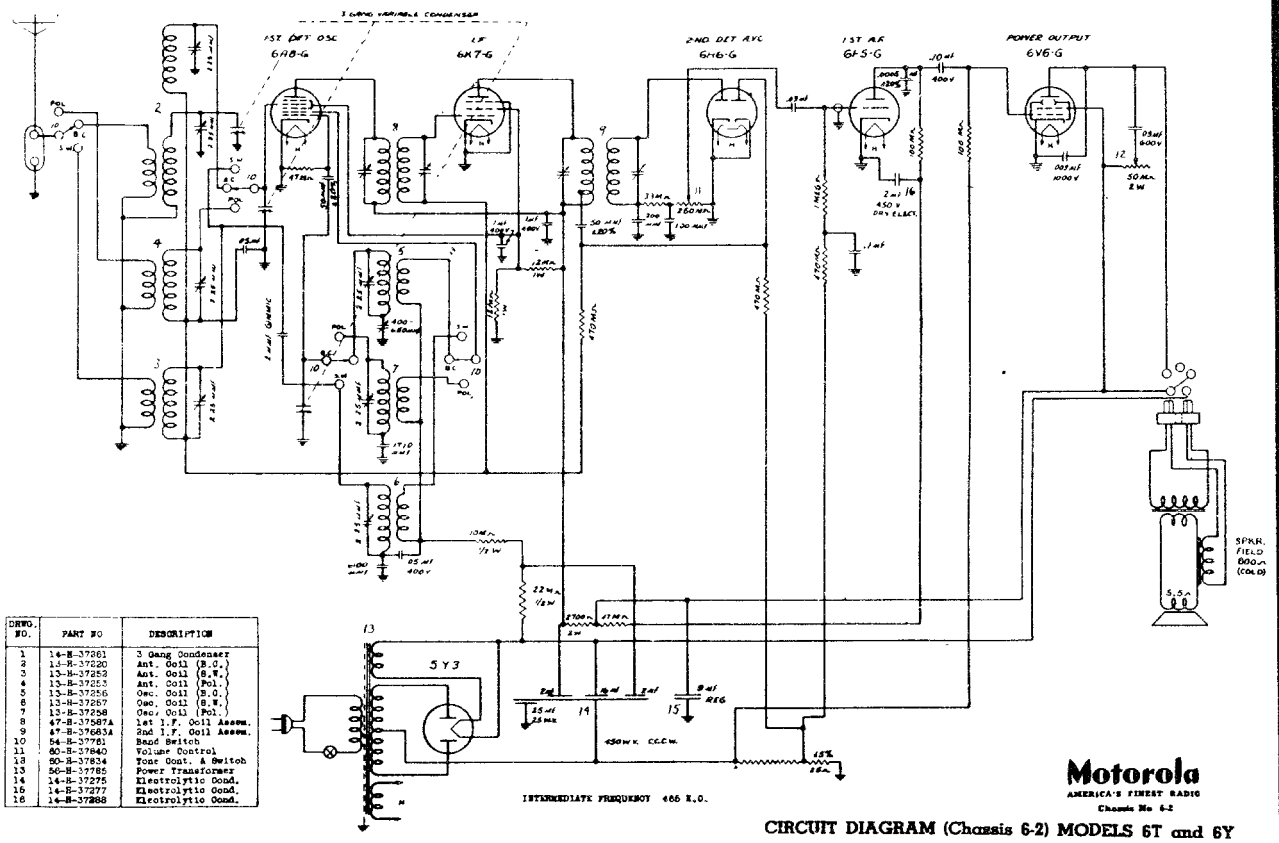

DRWG. NO.	PART NO	DESCRIPTION
1	14-H-37261	3 Gang Condenser
2	13-H-37220	Ant. Coil (B.C.)
3	13-H-37252	Ant. Coil (S.W.)
4	13-H-37253	Ant. Coil (Pol.)
5	13-H-37256	Osc. Coil (B.C.)
6	13-H-37257	Osc. Coil (S.W.)
7	13-H-37258	Osc. Coil (Pol.)
8	47-H-37587A	1st I.F. Coil Assem.
9	47-H-37683A	2nd I.F. Coil Assem.
10	54-H-37761	Band Switch
11	60-H-37840	Volume Control
18	60-H-37834	Tone Cont. & Switch
13	56-H-37785	Power Transformer
14	14-H-37275	Electrolytic Cond.
16	14-H-37277	Electrolytic Cond.
18	14-H-37288	Elcrolytic Cond.

Motorola
AMERICA'S FINEST RADIO
Chassis No 6-2

CIRCUIT DIAGRAM (Chassis 6-2) MODELS 6T and 6Y

CIRCUIT DIAGRAM (Chassis 5-2) MODELS 5T-1, 5T-2 and 5Y

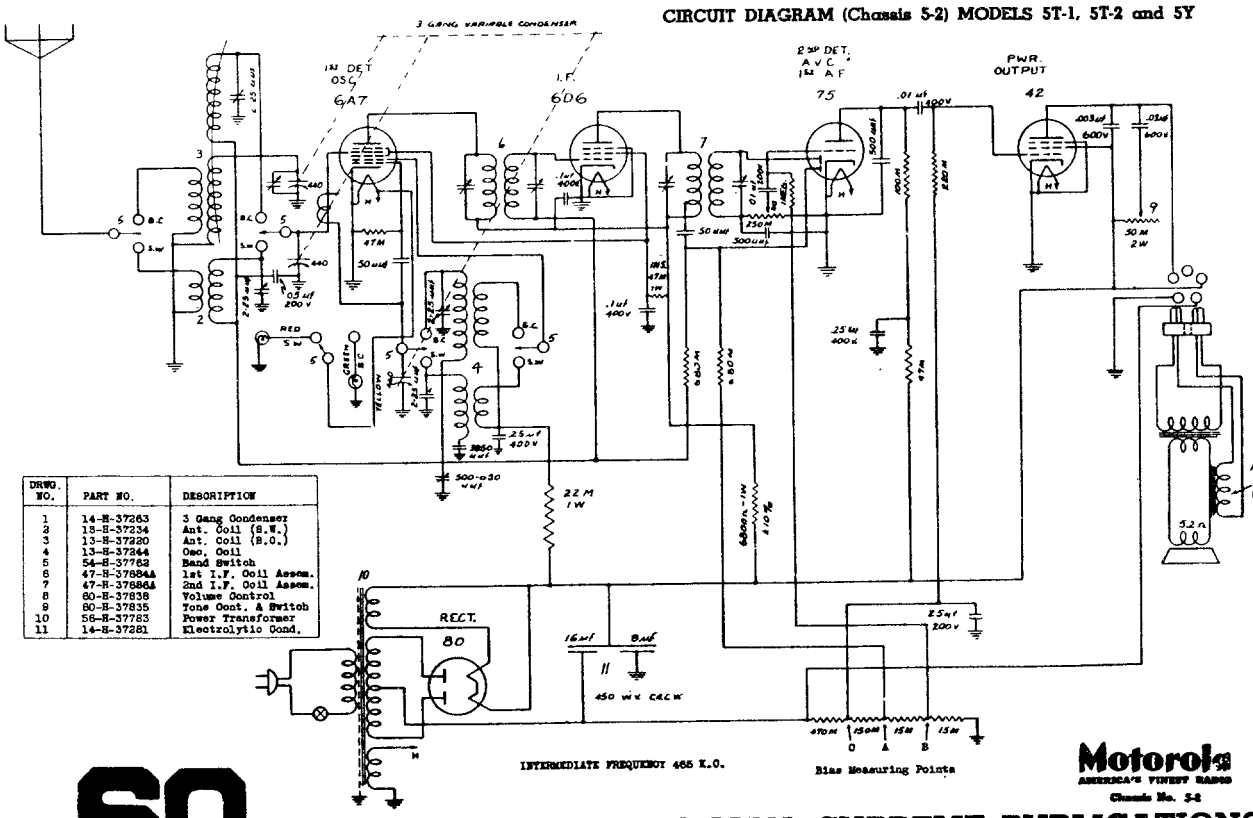

DRWG. NO.	PART NO.	DESCRIPTION
1	14-H-37263	3 Gang Condenser
2	13-H-37234	Ant. Coil (S.W.)
3	13-H-37220	Ant. Coil (B.C.)
4	13-H-37244	Osc. Coil
5	54-H-37762	Band Switch
6	47-H-37884A	1st I.F. Coil Assem.
7	47-H-37886A	2nd I.F. Coil Assem.
8	60-H-37838	Volume Control
9	60-H-37835	Tone Cont. & Switch
10	56-H-37783	Power Transformer
11	14-H-37281	Electrolytic Cond.

Motorola
AMERICA'S FINEST RADIO
Chassis No. 5-2

COMPILED BY M. N. BEITMAN, SUPREME PUBLICATIONS

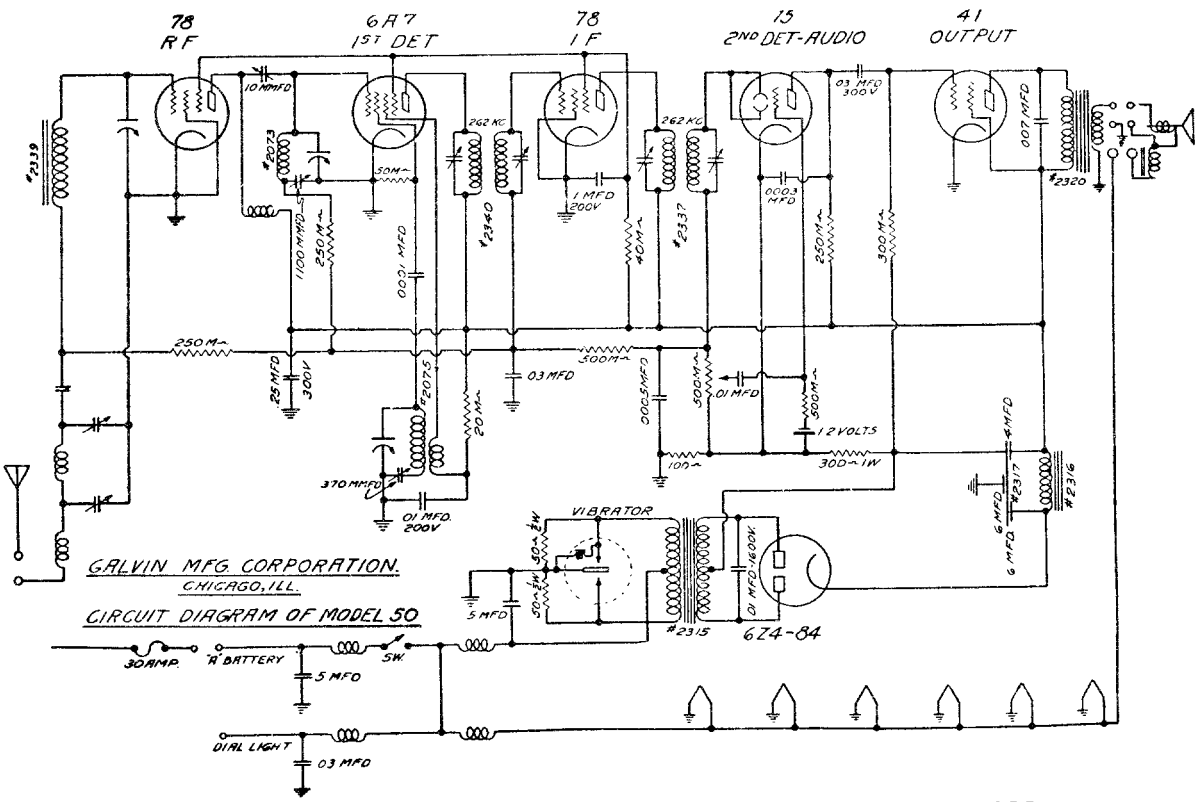
78
RF
6A7
1ST DET
78
IF
15
2ND DET-AUDIO
41
OUTPUT
VIBRATOR
6Z4-84
GALVIN MFG. CORPORATION.
CHICAGO, ILL.
CIRCUIT DIAGRAM OF MODEL 50
30 AMP.
'A' BATTERY
SW.
DIAL LIGHT

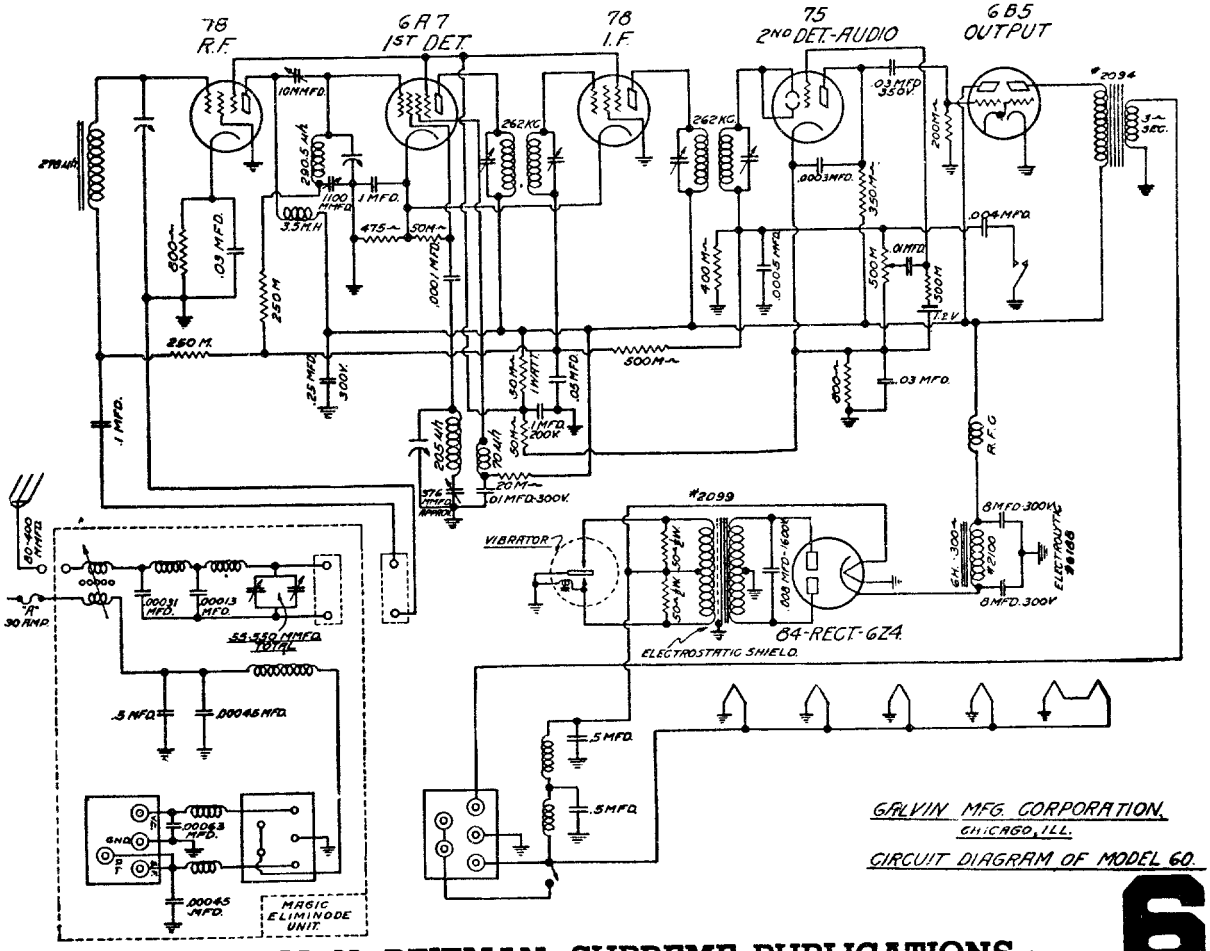
78
R.F.
6A7
1ST DET.
78
I.F.
75
2ND DET.-AUDIO
6B5
OUTPUT
VIBRATOR
84-RECT-6Z4
ELECTROSTATIC SHIELD
MAGIC ELIMINODE UNIT
GALVIN MFG. CORPORATION.
CHICAGO, ILL.
CIRCUIT DIAGRAM OF MODEL 60.

Radio Receiver, Model F-40 **General Electric Co.**

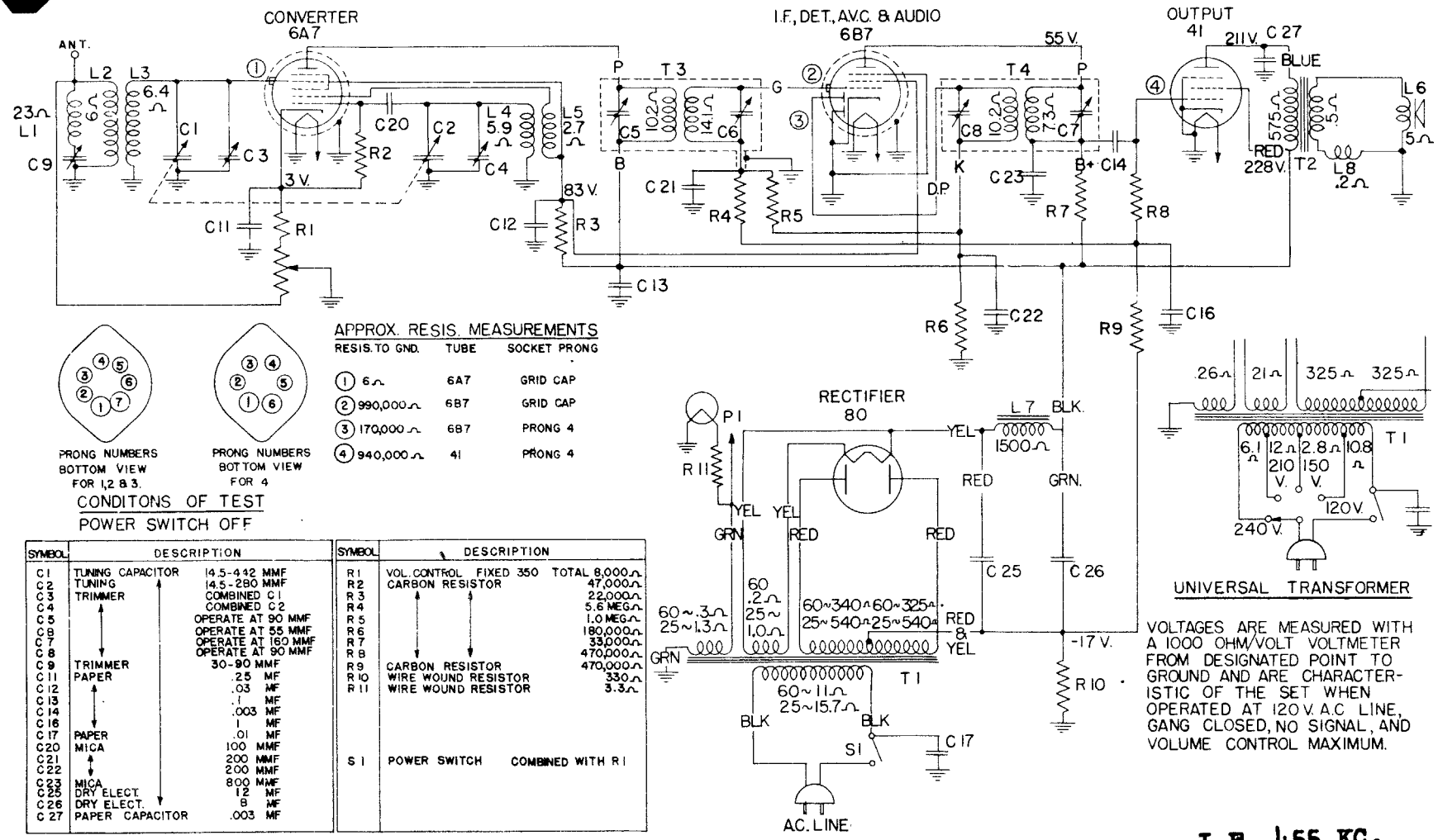

PRONG NUMBERS BOTTOM VIEW FOR 1,2 & 3.

PRONG NUMBERS BOTTOM VIEW FOR 4

CONDITONS OF TEST
POWER SWITCH OFF

APPROX. RESIS. MEASUREMENTS

RESIS. TO GND.	TUBE	SOCKET PRONG
(1) 6 Ω	6A7	GRID CAP
(2) 990,000 Ω	6B7	GRID CAP
(3) 170,000 Ω	6B7	PRONG 4
(4) 940,000 Ω	41	PRONG 4

SYMBOL	DESCRIPTION	
C1	TUNING CAPACITOR	14.5-442 MMF
C2	TUNING	14.5-280 MMF
C3	TRIMMER	COMBINED C1
C4		COMBINED C2
C5		OPERATE AT 90 MMF
C6		OPERATE AT 55 MMF
C7		OPERATE AT 160 MMF
C8		OPERATE AT 90 MMF
C9	TRIMMER	30-90 MMF
C11	PAPER	.25 MF
C12		.03 MF
C13		.1 MF
C14		.003 MF
C16		1 MF
C17	PAPER	.01 MF
C20	MICA	100 MMF
C21		200 MMF
C22		200 MMF
C23	MICA	800 MMF
C25	DRY ELECT.	12 MF
C26	DRY ELECT.	8 MF
C27	PAPER CAPACITOR	.003 MF

SYMBOL	DESCRIPTION	
R1	VOL. CONTROL FIXED 350	TOTAL 8,000 Ω
R2	CARBON RESISTOR	47,000 Ω
R3		22,000 Ω
R4		5.6 MEG Ω
R5		1.0 MEG Ω
R6		180,000 Ω
R7		33,000 Ω
R8		470,000 Ω
R9	CARBON RESISTOR	470,000 Ω
R10	WIRE WOUND RESISTOR	330 Ω
R11	WIRE WOUND RESISTOR	3.3 Ω
S1	POWER SWITCH	COMBINED WITH R1

VOLTAGES ARE MEASURED WITH A 1000 OHM/VOLT VOLTMETER FROM DESIGNATED POINT TO GROUND AND ARE CHARACTERISTIC OF THE SET WHEN OPERATED AT 120 V. A.C LINE, GANG CLOSED, NO SIGNAL, AND VOLUME CONTROL MAXIMUM.

I.F. 455 KC.

Models A-63 and A-65 General Electric Co.

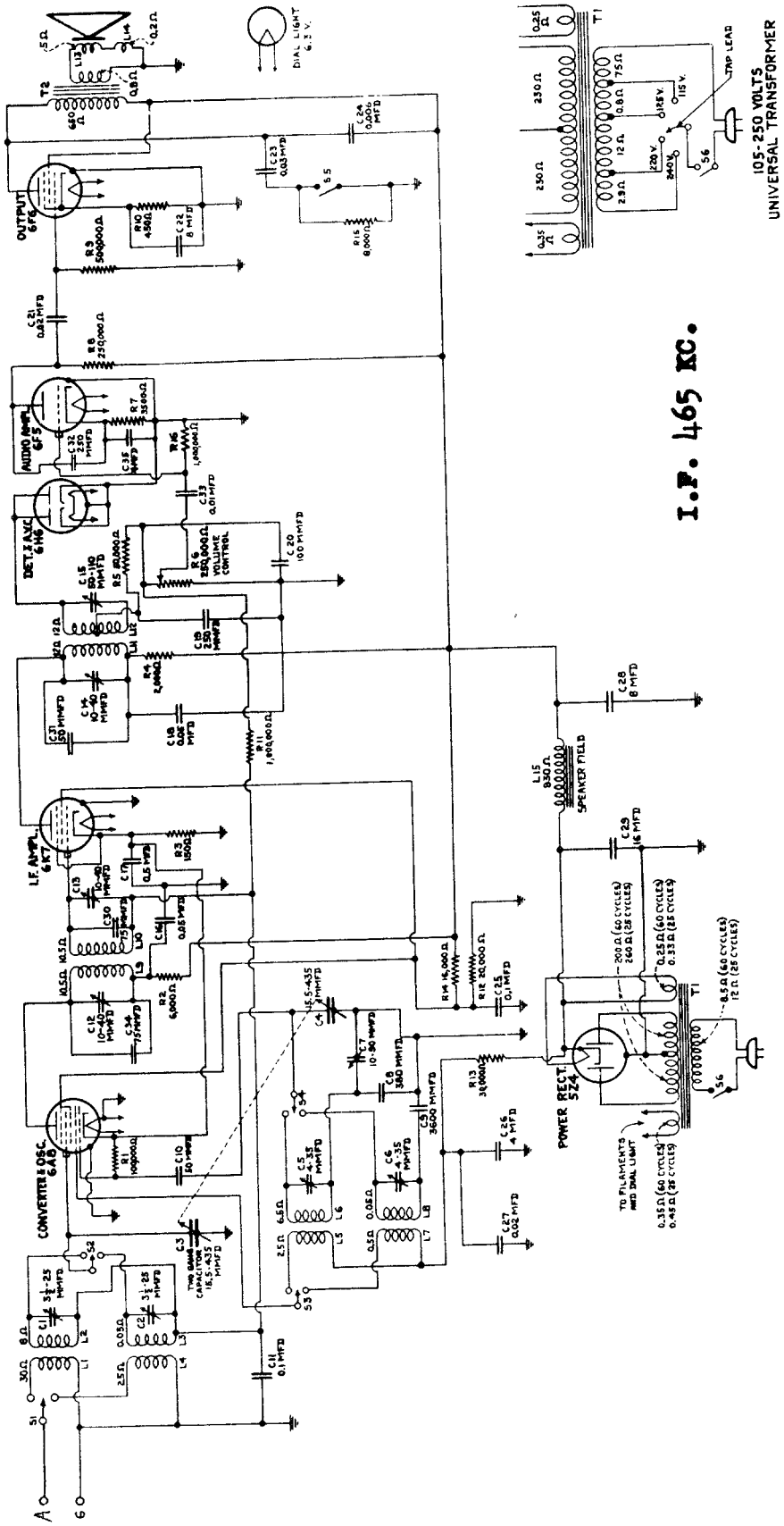

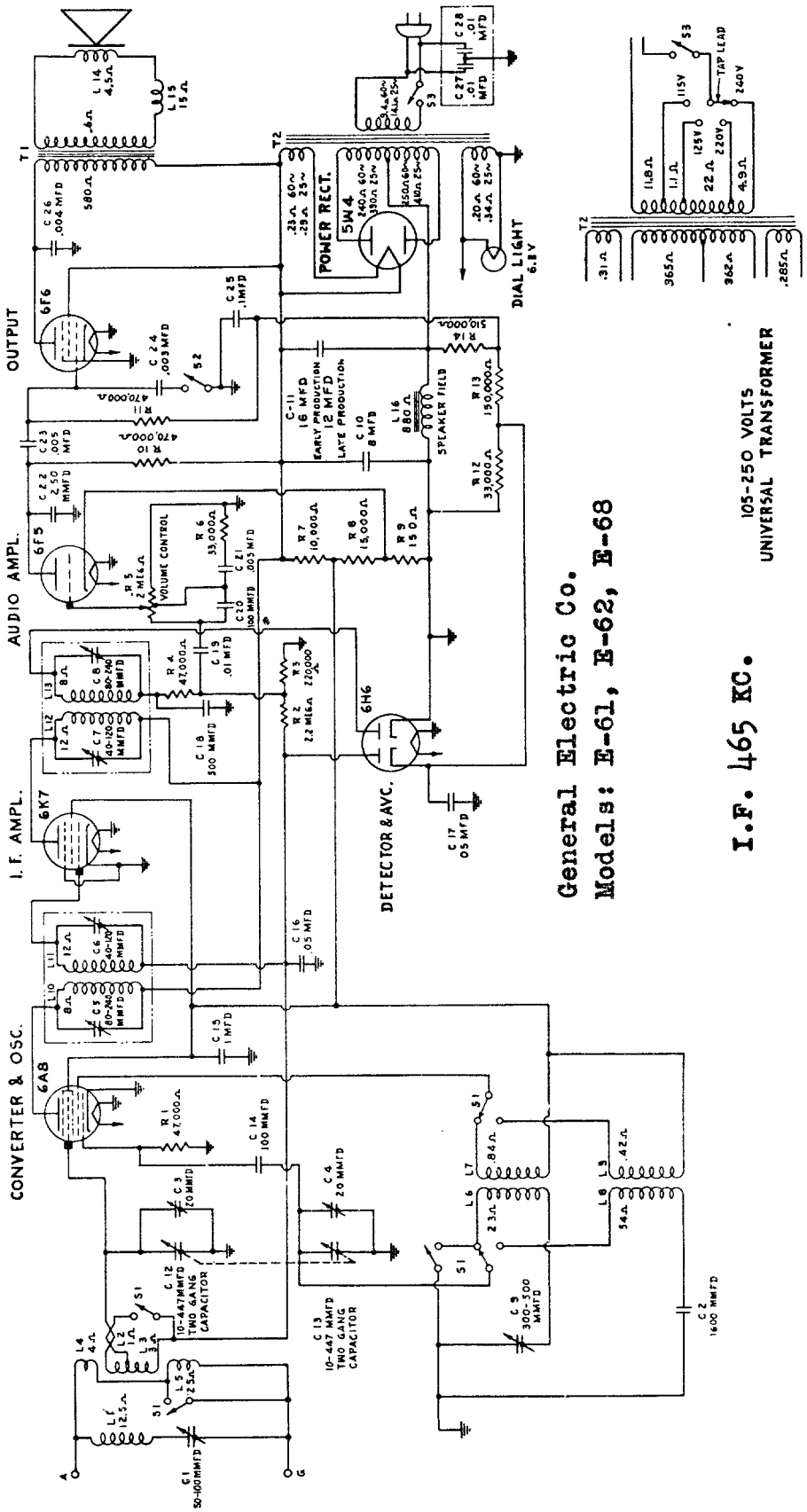
OUTPUT
AUDIO AMPL.
I. F. AMPL.
CONVERTER & OSC.
6F6
6F5
6K7
6A8
6H6
5W4
POWER RECT.
DIAL LIGHT
6.3V
DETECTOR & AVC.
SPEAKER FIELD
VOLUME CONTROL
TAP LEAD
105-250 VOLTS
UNIVERSAL TRANSFORMER
General Electric Co.
Models: E-61, E-62, E-68
I.F. 465 KC.

General Electric *Radio Receivers, Models E-61, E-62, and E-68*

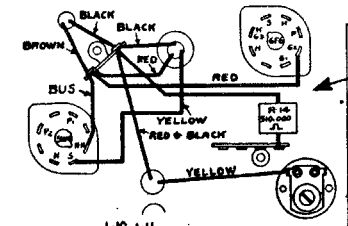

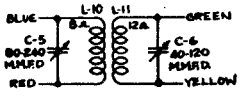

INTERNAL CONNECTIONS OF 1ST I.F. TRANSFORMER

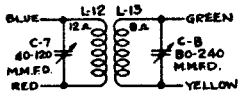

INTERNAL CONNECTIONS OF 2ND I.F. TRANSFORMER

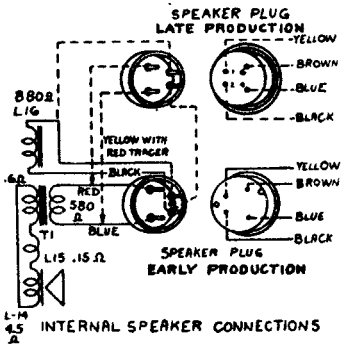

INTERNAL SPEAKER CONNECTIONS

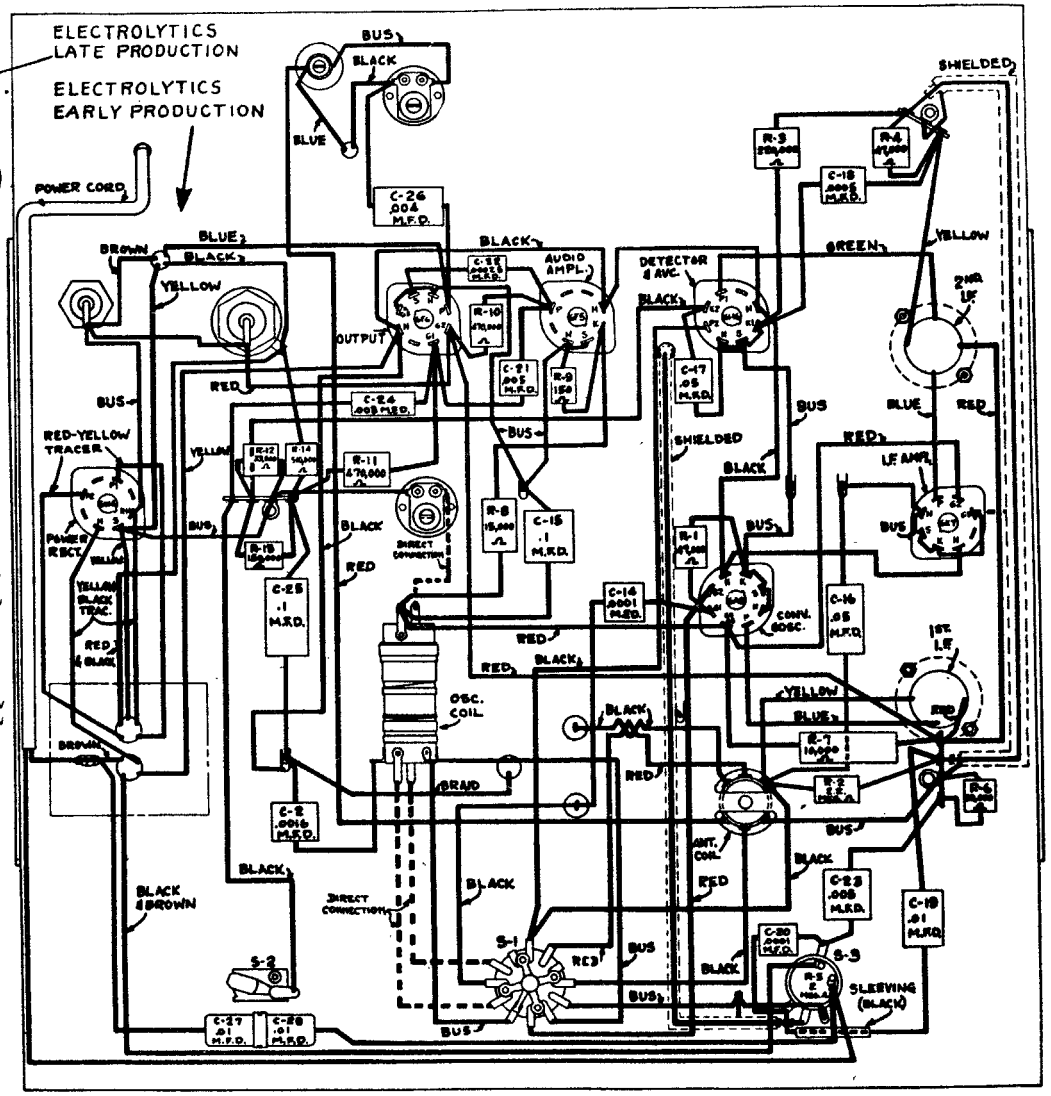

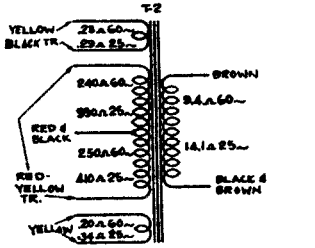

INTERNAL CONNECTIONS OF POWER TRANSFORMER FOR 115 VOLTS

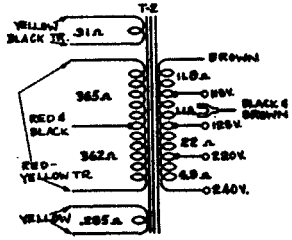

INTERNAL CONNECTIONS OF UNIVERSAL POWER TRANSFORMER FOR 105-250 VOLTS

MANUAL OF MOST-OFTEN-NEEDED RADIO DIAGRAMS

GENERAL ELECTRIC

MODEL E-126

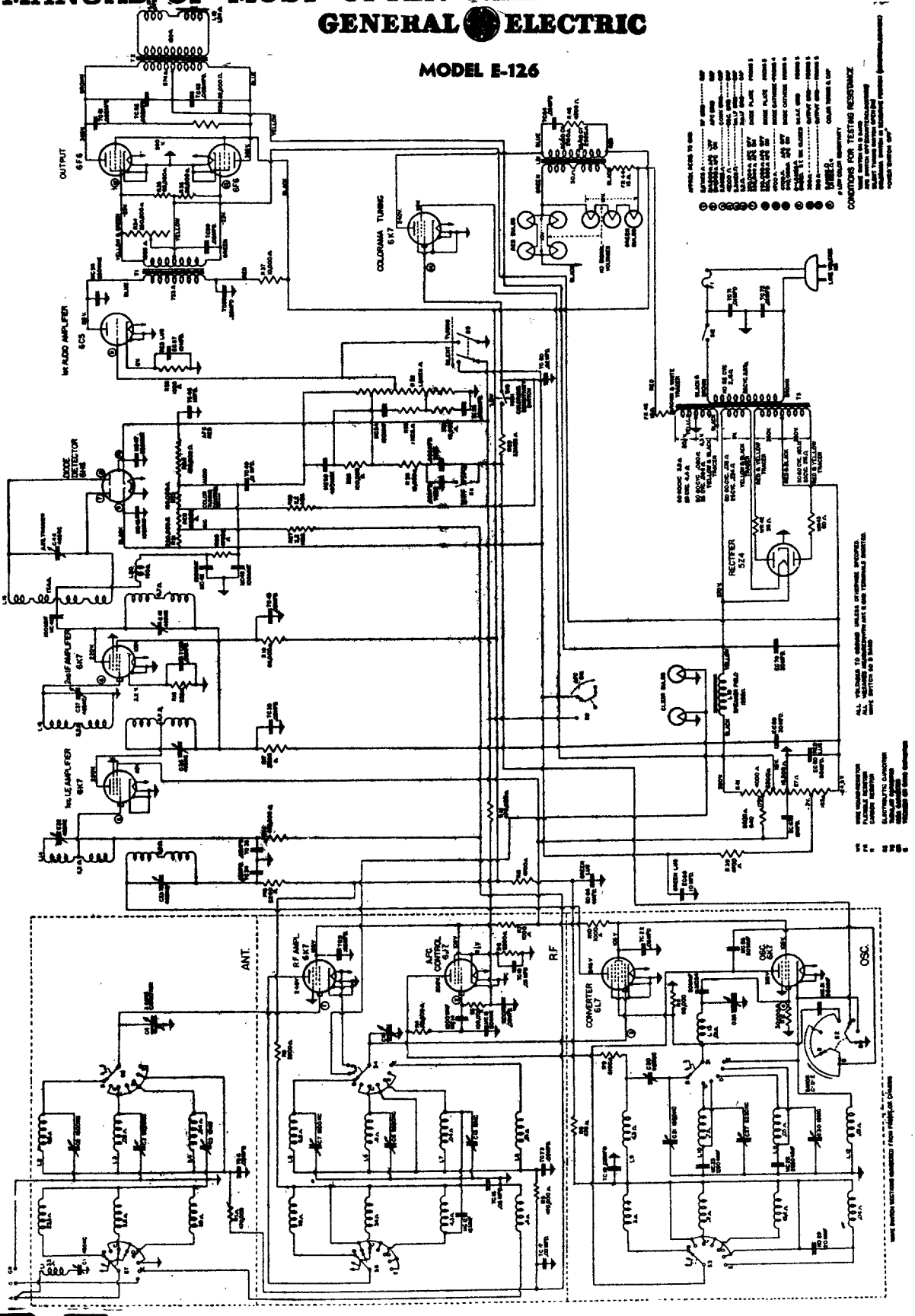

COMPILED BY M. N. BEITMAN, SUPREME PUBLICATIONS

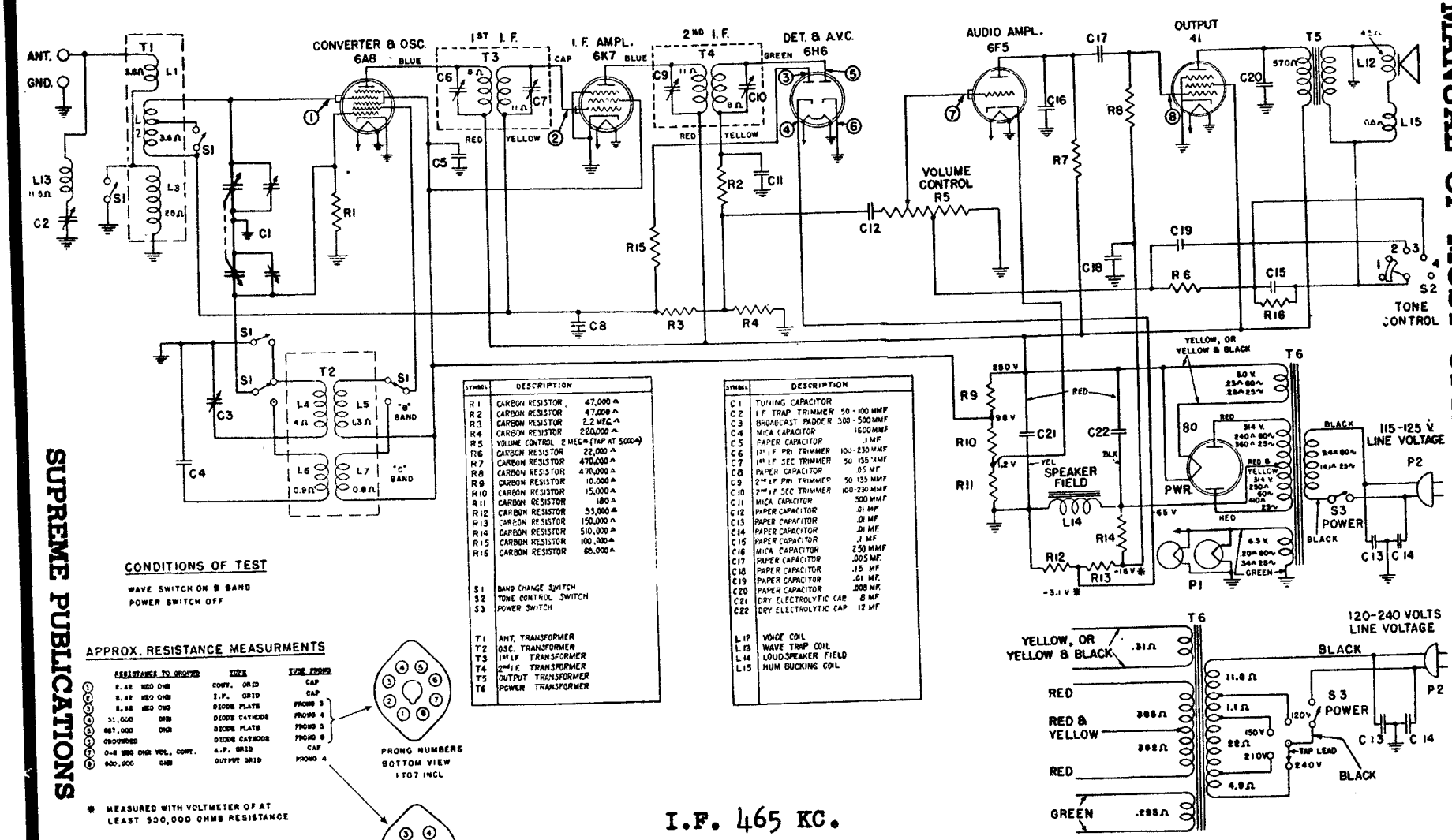

SYMBOL	DESCRIPTION	
R1	CARBON RESISTOR	47,000 Ω
R2	CARBON RESISTOR	47,000 Ω
R3	CARBON RESISTOR	2.2 MEG Ω
R4	CARBON RESISTOR	220,000 Ω
R5	VOLUME CONTROL	2 MEG Ω (TAP AT 5,000 Ω)
R6	CARBON RESISTOR	22,000 Ω
R7	CARBON RESISTOR	470,000 Ω
R8	CARBON RESISTOR	470,000 Ω
R9	CARBON RESISTOR	10,000 Ω
R10	CARBON RESISTOR	15,000 Ω
R11	CARBON RESISTOR	180 Ω
R12	CARBON RESISTOR	33,000 Ω
R13	CARBON RESISTOR	150,000 Ω
R14	CARBON RESISTOR	510,000 Ω
R15	CARBON RESISTOR	100,000 Ω
R16	CARBON RESISTOR	68,000 Ω
S1	BAND CHANGE SWITCH	
S2	TONE CONTROL SWITCH	
S3	POWER SWITCH	
T1	ANT. TRANSFORMER	
T2	OSC. TRANSFORMER	
T3	1st I.F. TRANSFORMER	
T4	2nd I.F. TRANSFORMER	
T5	OUTPUT TRANSFORMER	
T6	POWER TRANSFORMER	

SYMBOL	DESCRIPTION	
C1	TUNING CAPACITOR	
C2	I.F. TRAP TRIMMER	50 - 100 MMF
C3	BROADCAST PADDER	300 - 500 MMF
C4	MICA CAPACITOR	1600 MMF
C5	PAPER CAPACITOR	.1 MF
C6	1st I.F. PRI. TRIMMER	100 - 230 MMF
C7	1st I.F. SEC. TRIMMER	50 - 135 MMF
C8	PAPER CAPACITOR	.05 MF
C9	2nd I.F. PRI. TRIMMER	50 - 135 MMF
C10	2nd I.F. SEC. TRIMMER	100 - 230 MMF
C11	MICA CAPACITOR	500 MMF
C12	PAPER CAPACITOR	.01 MF
C13	PAPER CAPACITOR	.01 MF
C14	PAPER CAPACITOR	.01 MF
C15	PAPER CAPACITOR	.1 MF
C16	MICA CAPACITOR	250 MMF
C17	PAPER CAPACITOR	.005 MF
C18	PAPER CAPACITOR	.15 MF
C19	PAPER CAPACITOR	.01 MF
C20	PAPER CAPACITOR	.008 MF
C21	DRY ELECTROLYTIC CAP	8 MF
C22	DRY ELECTROLYTIC CAP	12 MF
L12	VOICE COIL	
L13	WAVE TRAP COIL	
L14	LOUDSPEAKER FIELD	
L15	HUM BUCKING COIL	

CONDITIONS OF TEST

WAVE SWITCH ON B BAND
POWER SWITCH OFF

APPROX. RESISTANCE MEASURMENTS

	RESISTANCE TO GROUND	TYPE	TUBE PRONG
1	2.4Ω MEG OHM	CONV. GRID	CAP
2	2.4Ω MEG OHM	I.F. GRID	CAP
3	2.5Ω MEG OHM	DIODE PLATE	PRONG 3
4	31,000 OHM	DIODE CATHODE	PRONG 4
5	687,000 OHM	DIODE PLATE	PRONG 5
6	GROUNDED	DIODE CATHODE	PRONG 6
7	0-4 MEG OHM VOL. CONT.	A.F. GRID	CAP
8	600,000 OHM	OUTPUT GRID	PRONG 4

* MEASURED WITH VOLTMETER OF AT LEAST 500,000 OHMS RESISTANCE

PRONG NUMBERS BOTTOM VIEW 1 TO 7 INCL

PRONG NUMBERS BOTTOM VIEW FOR 8

I.F. 465 KC.

General Electric Co.

Receivers, Models F-63, F-65 and F-66

Tubes

R. F. Amplifier.....6K7 Triple-grid Super-control Amplifier
Converter and Oscillator.....6A8 Pentagrid Converter
I. F. Amplifier.....6K7 Triple-grid Super-control Amplifier
Detector and AVC..6H6 Twin Diode
Audio Amplifier....6C5 Detector Amplifier Triode
Output.....Two 6F6 Power Amplifier Pentodes (Push-pull)
Power Rectifier.....5Z4 Full-wave Rectifier
Dial Lamps.....MAZDA No. 46

Tuning Frequency Range

Band "A"	140–410 kc
Band "B"	540–1750 kc
Band "C"	1.75–6.0 mc (1750–6000 kc)
Band "D"	6.0–19.5 mc (6000–19,500 kc)

I.F. 465 KC.

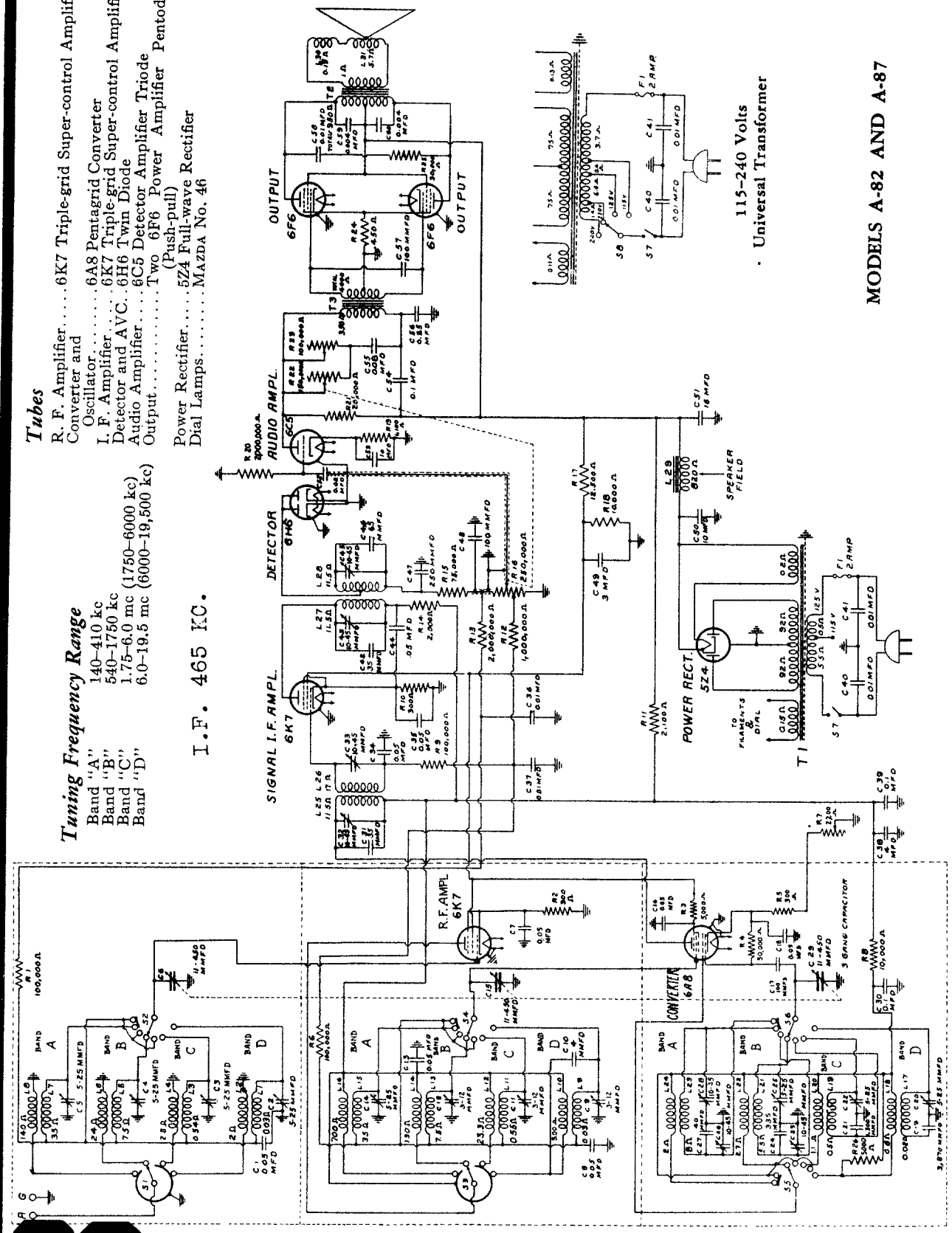

MODELS A-82 AND A-87

COMPILED BY M. N. BEITMAN, SUPREME PUBLICATIONS

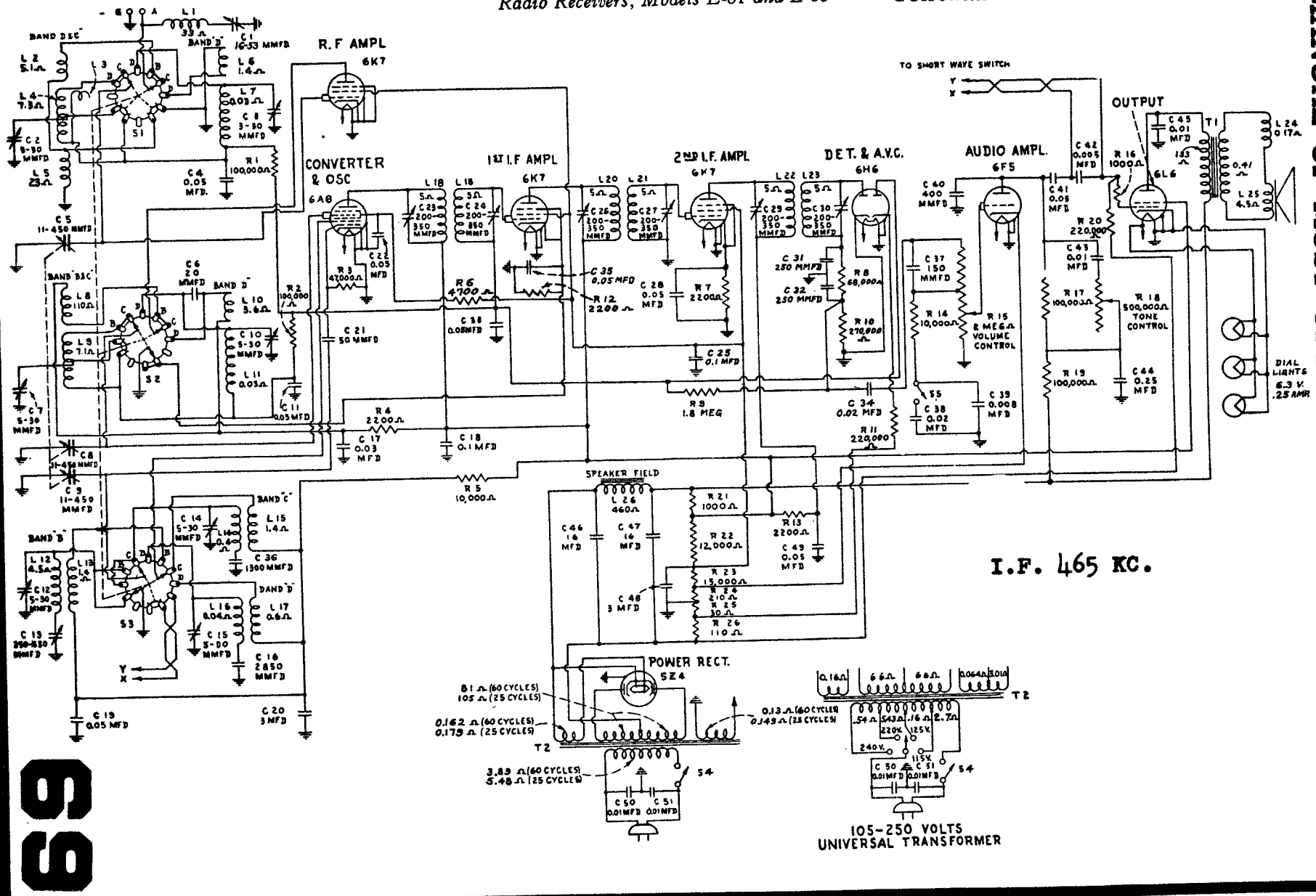
R.F AMPL
6K7
CONVERTER & OSC
6A8
1ST I.F AMPL
6K7
2ND I.F. AMPL
6K7
DET. & A.V.C.
6H6
AUDIO AMPL.
6F5
OUTPUT
6L6
TO SHORT WAVE SWITCH
SPEAKER FIELD
POWER RECT.
5Z4
105-250 VOLTS
UNIVERSAL TRANSFORMER
I.F. 465 KC.

70

General Electric Co. Models: A-83, A-85

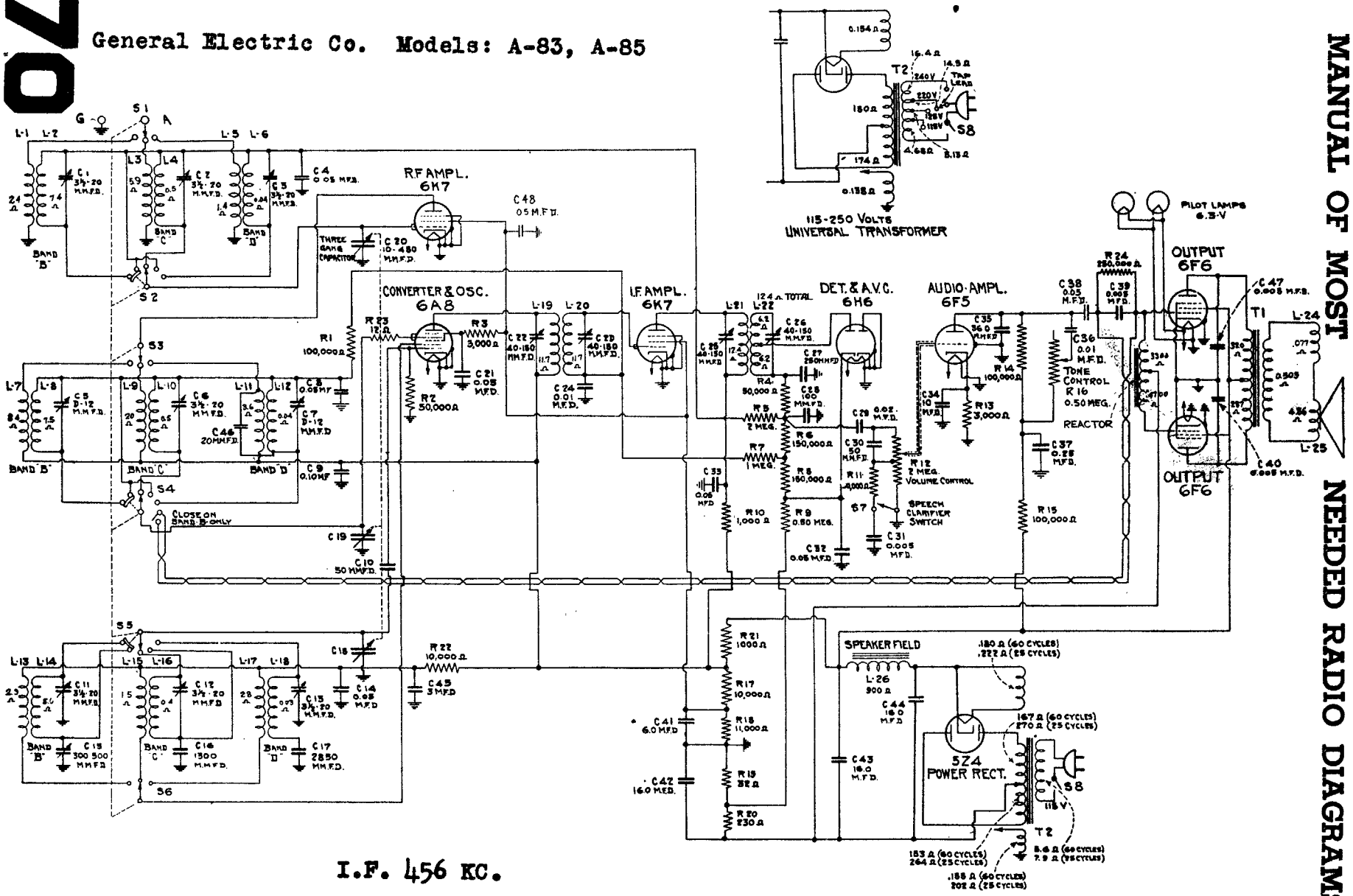

GENERAL ELECTRIC

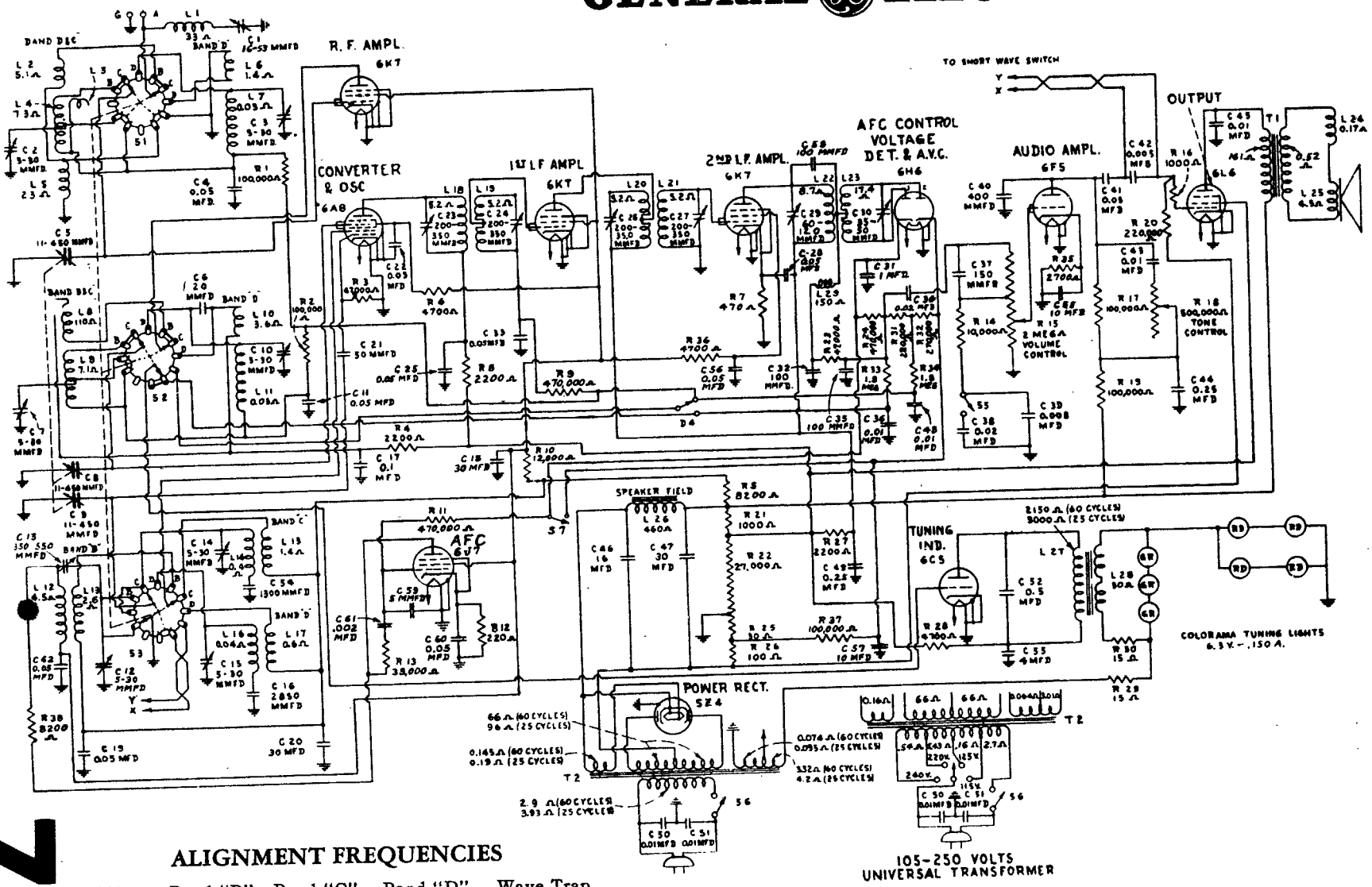

ALIGNMENT FREQUENCIES

I.F.	Band "B"	Band "C"	Band "D"	Wave Trap
465 kc.	580 kc. 1500 kc.	5220 kc.	18,000 kc.	465 kc.

Radio Receivers, Models E-101, E-105 and E-106

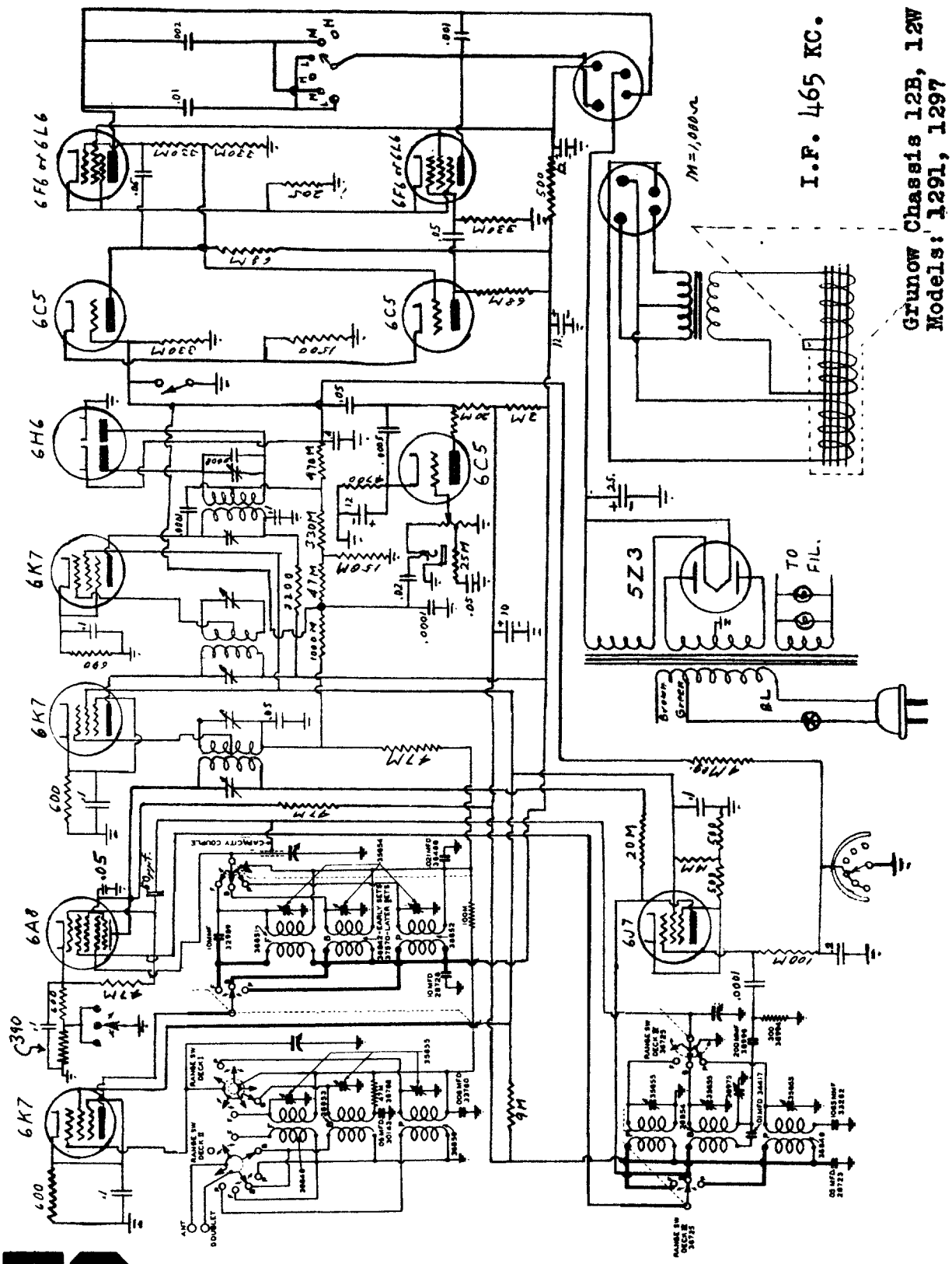
Grunow Chassis 12B, 12W
Models: 1291, 1297
I.F. 465 KC.
6F6 or 6L6
6C5
6H6
6K7
6A8
6J7
5Z3
TO FIL.
BL
Brown
Green
M=1,080
CAPACITY COUPLE
RANGE SW DECK I
RANGE SW DECK II
ANT
DOUBLET

MANUAL OF MOST-OFTEN-NEEDED RADIO DIAGRAMS

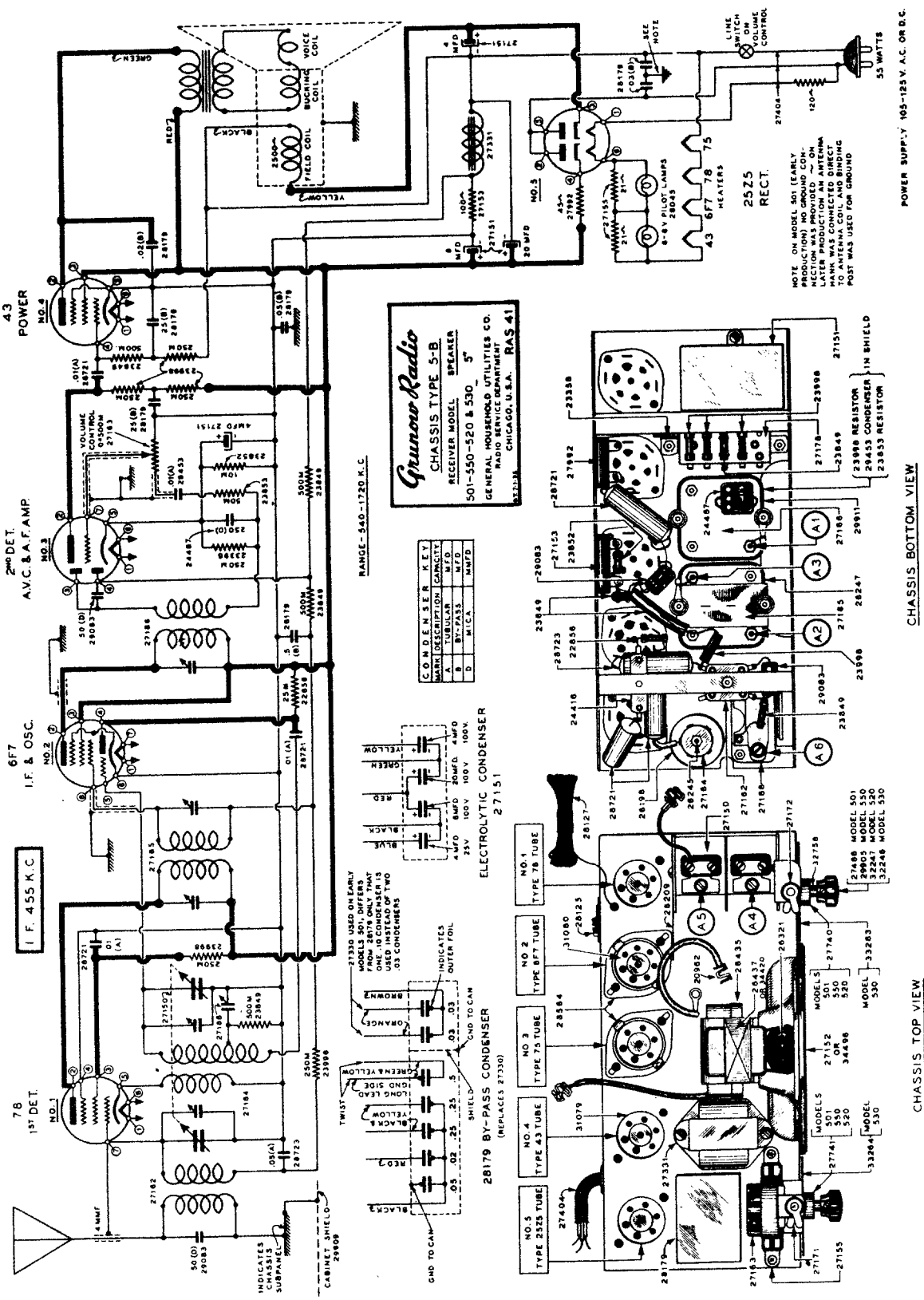

COMPILED BY M. N. BEITMAN, SUPREME PUBLICATIONS

73

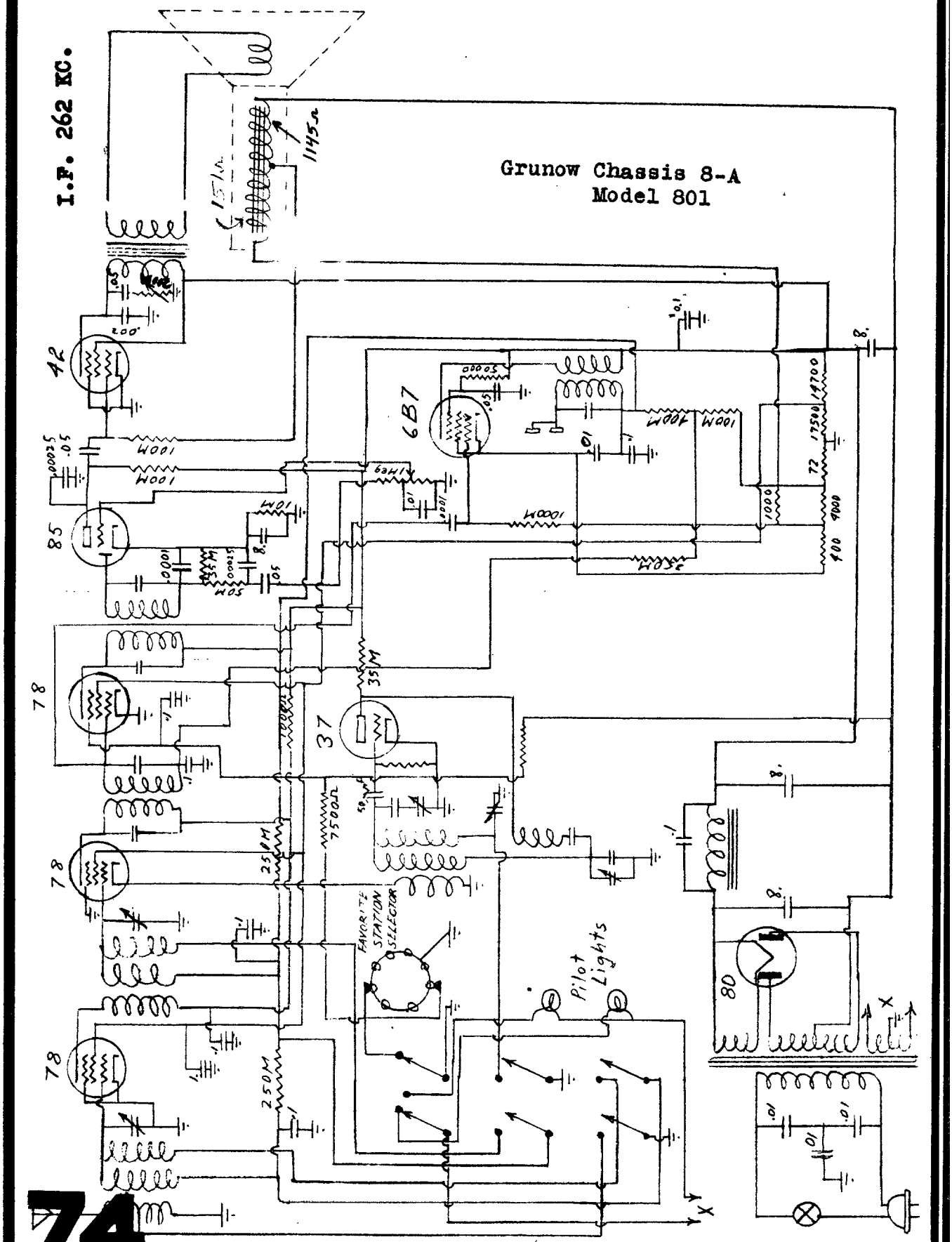
I.F. 262 KC.
Grunow Chassis 8-A
Model 801
42
85
78
78
78
6B7
37
80
FAVORITE STATION SELECTOR
Pilot Lights

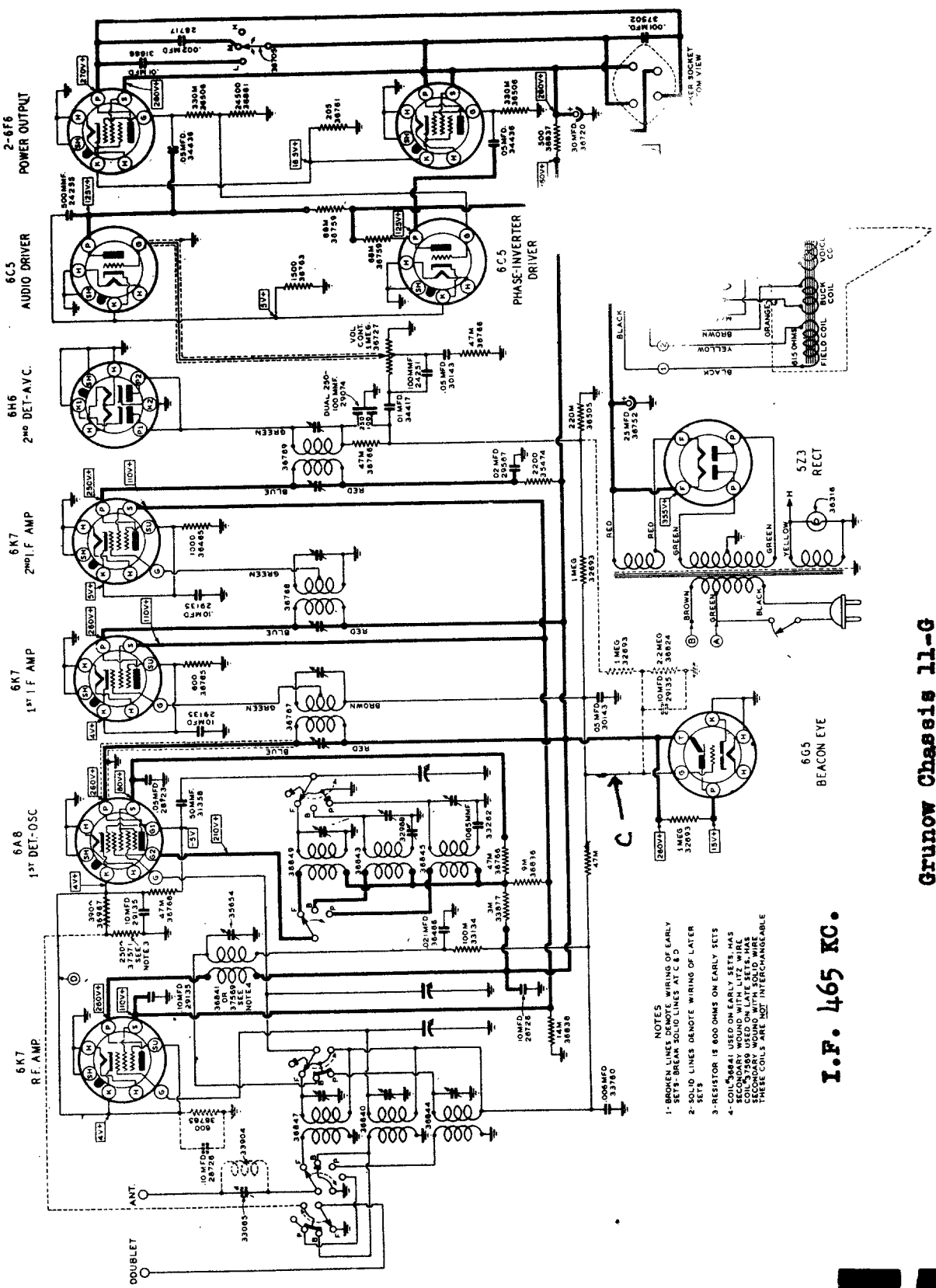

Grunow Chassis 11-G
Models: 1191, 1191B

I.F. 465 KC.

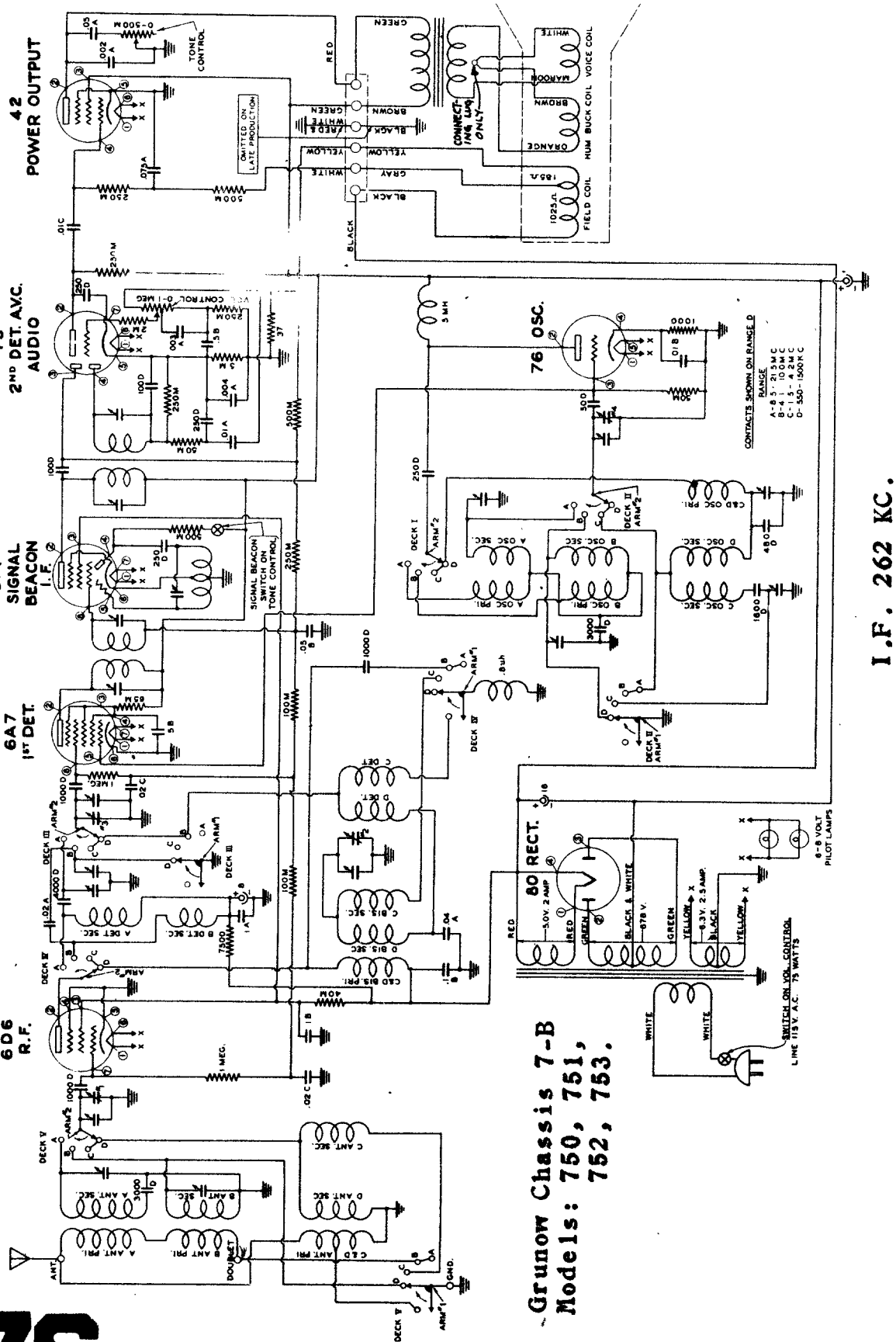

Grunow Chassis 7-B
Models: 750, 751,
752, 753.

General Motors

MODELS 120, 130 and 140

CHASSIS MODELS "A" and "B"

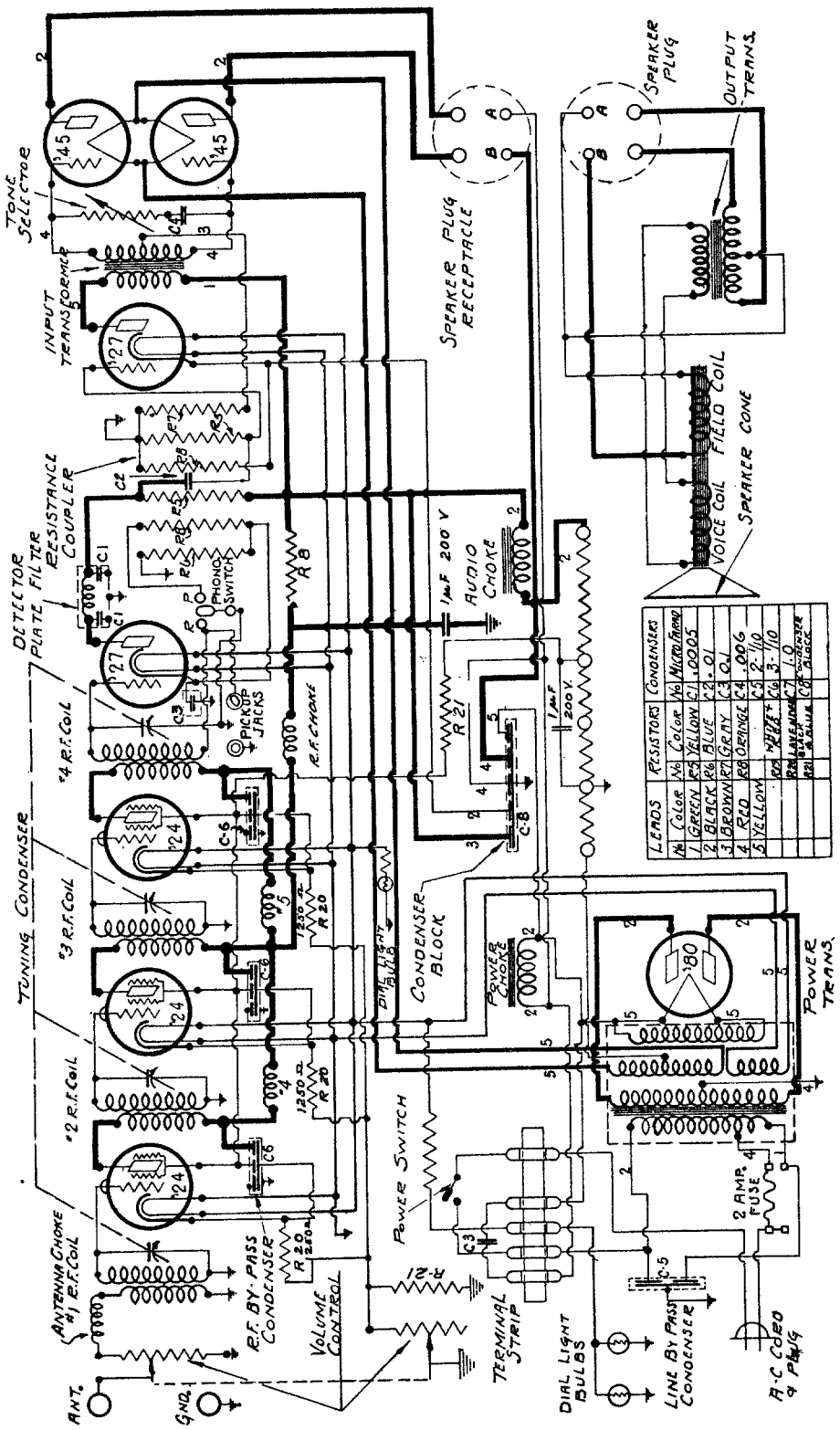

Circuit Diagram of Chassis with Serial Numbers Between 29100A and 6200A; and 1700B and 1946B.

BY M. N. BEITMAN

CIRCUIT DIAGRAM

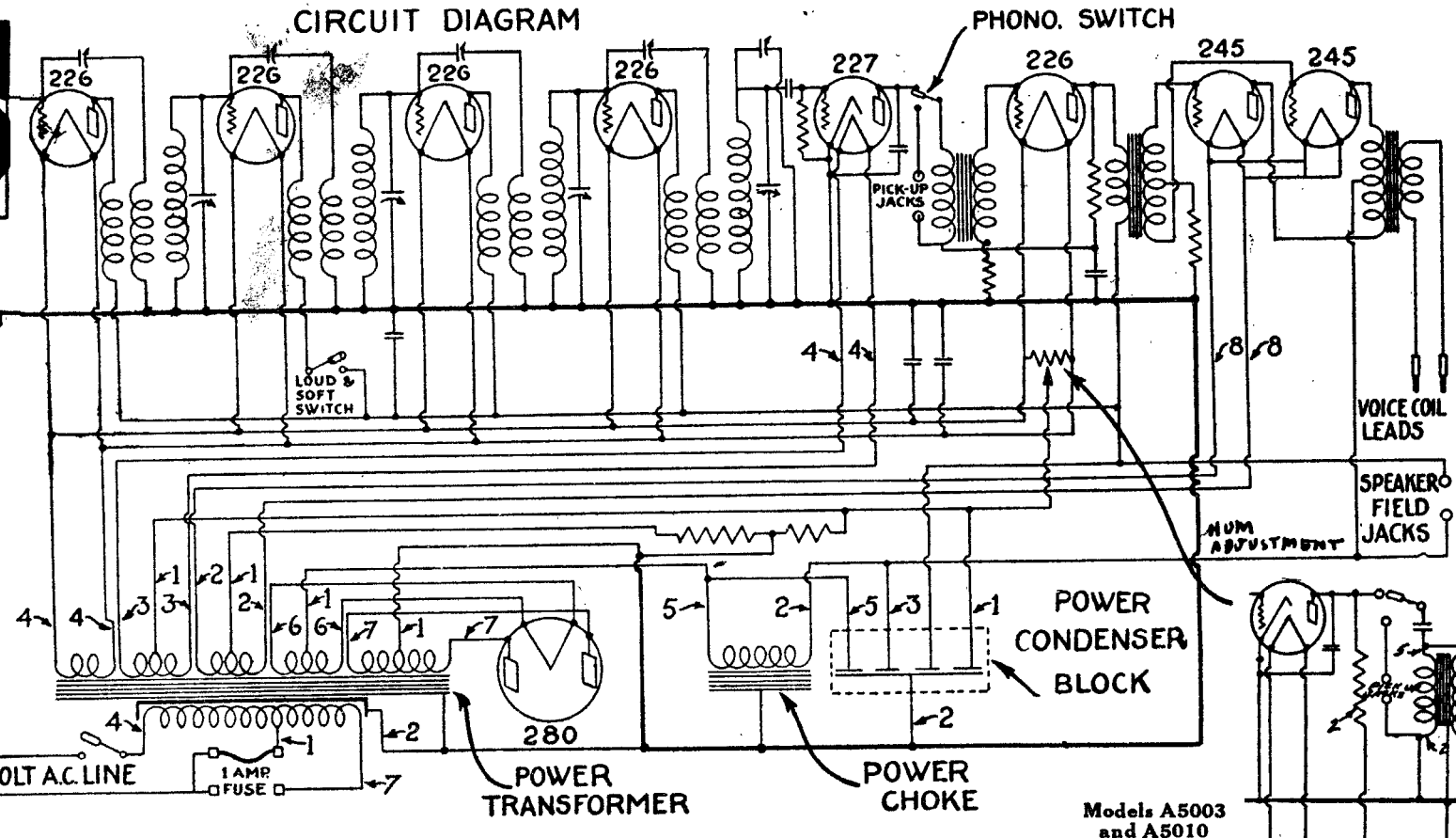

COLOR CODE

1 Red
2 Green
3 Blue
4 Black
5 Yellow
6 Brown
7 White

Models 5091 (60 Cycle) and A5004 (25 Cycle)

General Motors

Models A5003 and A5010

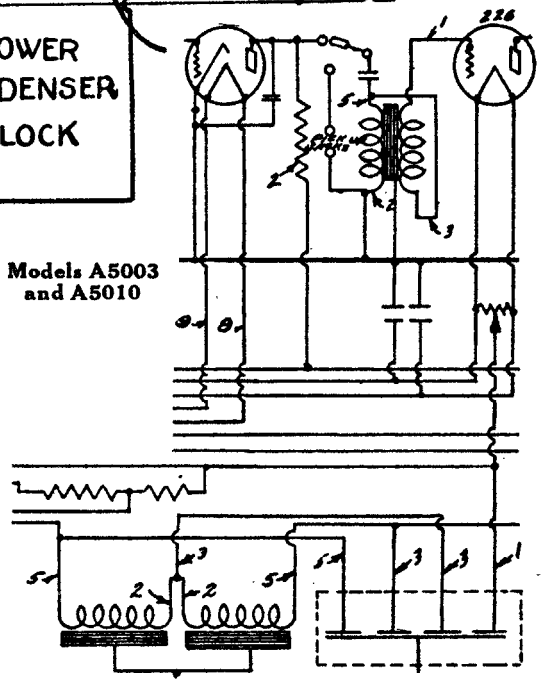

The Circuit incorporates four balanced, tuned stages of radio frequency amplification, a semi-tuned antenna input system, detector, one stage of audio frequency amplification and one stage of push-pull audio frequency amplification. (Two 245 Power Tubes.)

An output push-pull transformer is used in order to match the impedance of the voice coil of the dynamic speaker with the output of the power tubes.

A switch is connected in the plate circuit of the second radio frequency tube, termed the soft and loud switch, which breaks the circuit, thereby reducing amplification in the first two tubes and improving the tone quality of local reception.

A phonograph pick-up unit may be permanently connected by inserting the tips in jacks provided for this purpose. A switch is provided which connects the pick-up to the first audio transformer, or connects the plate lead of the transformer to the plate of the detector, depending on whether radio reception or phonograph music is desired.

Power Pack 8-P-6 and 8-P-3
Model 181—Chassis 180

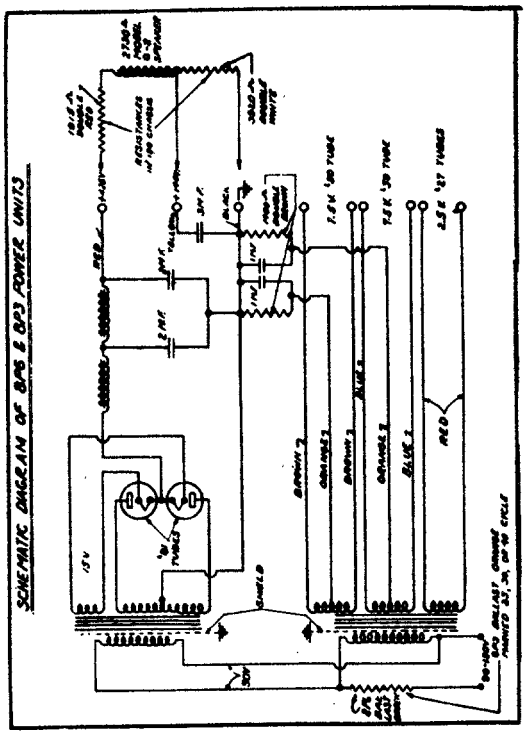

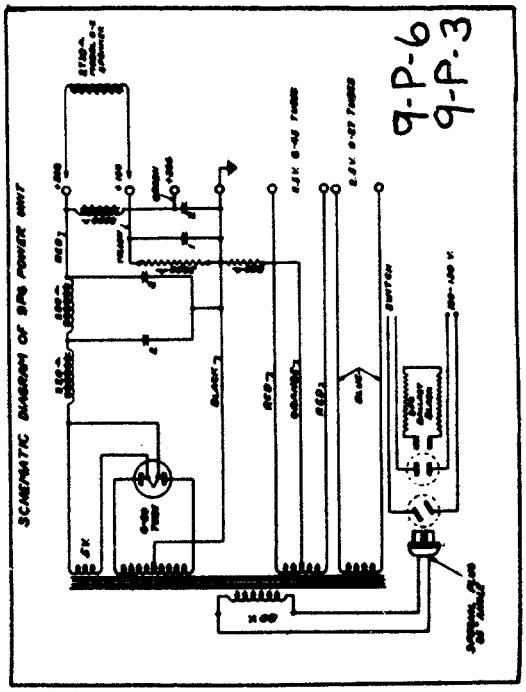

Power Pack 7-BP-6 and 7-BP-3
Models 71 and 72—Chassis 70-8

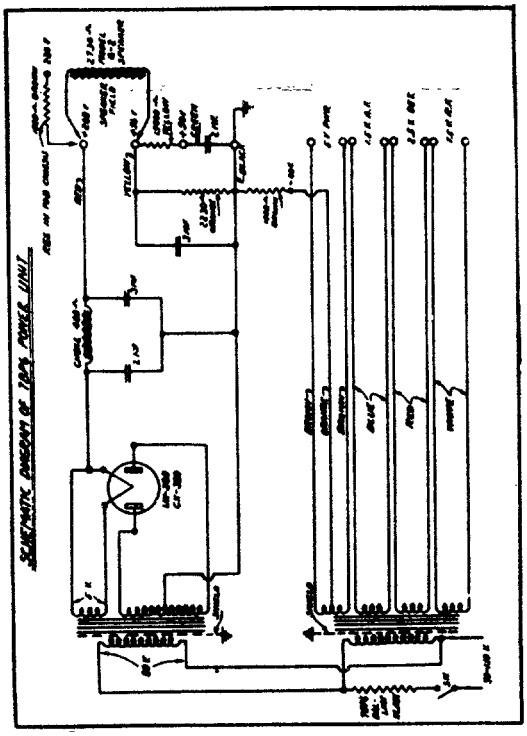

Power Pack 7-P-6 and 7-P
Models 71 and 72—Chassis 70

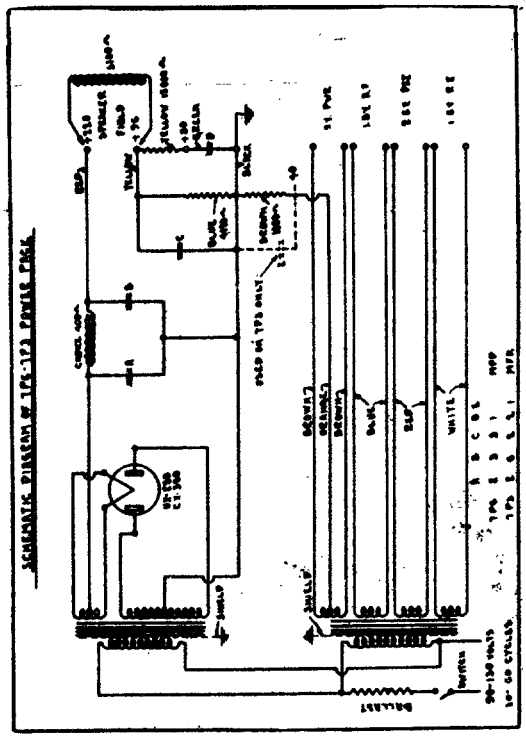

SCHEMATIC DIAGRAM OF MAJESTIC SCREEN GRID SUPERHETERODYNE RECEIVER
MODEL 15 AND 15-B CHASSIS (SERIAL No. 63,150 AND OVER) 115 AND 230 VOLTS, 25-50 AND 50-60 CYCLES.
POWER REQD. — 60 WATTS

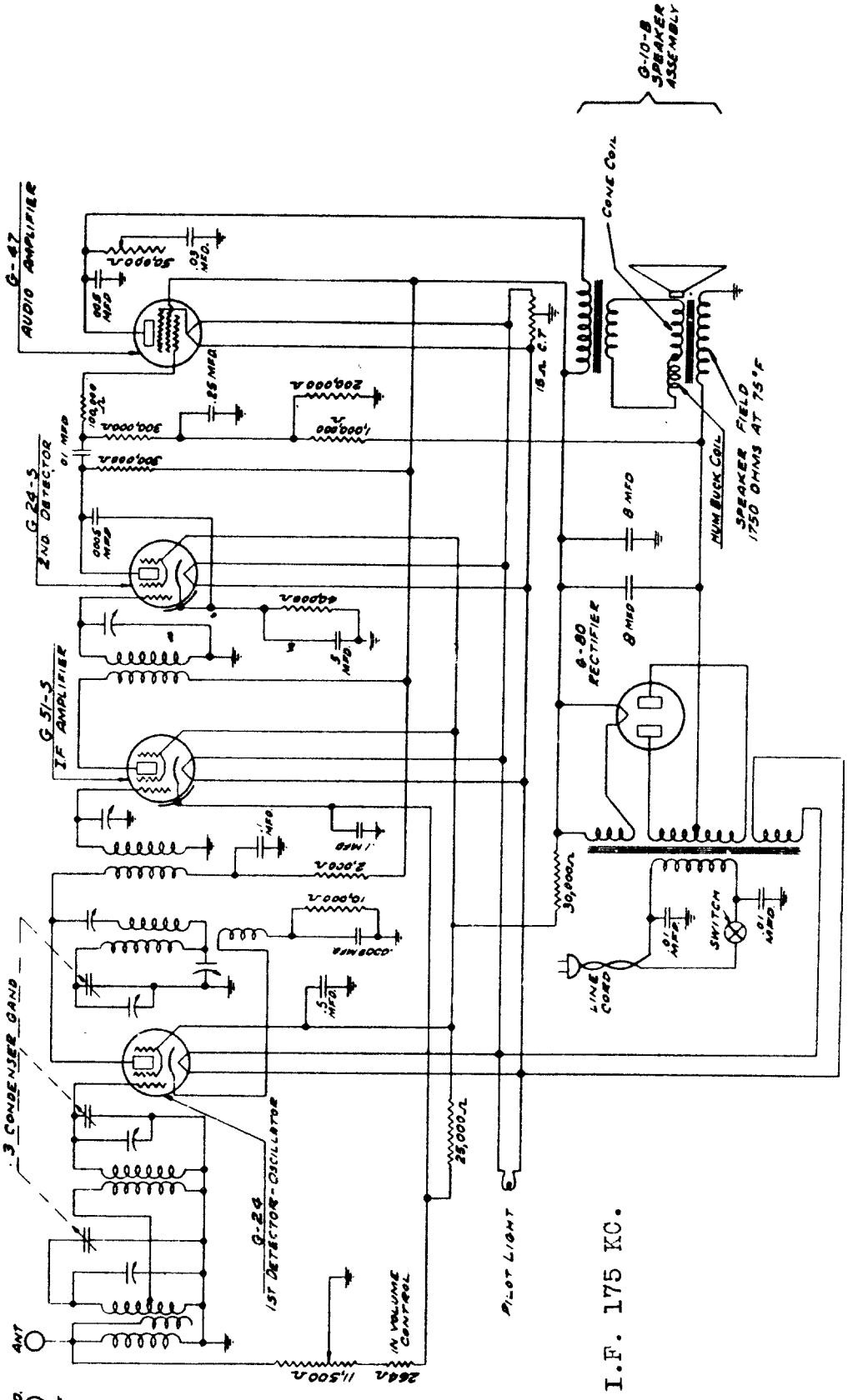

SCHEMATIC DIAGRAM OF MAJESTIC SCREEN GRID SUPERHETERODYNE RECEIVER
MODEL 20 CHASSIS 110 AND 220 VOLTS - 50-60 AND 25-40 CYCLE

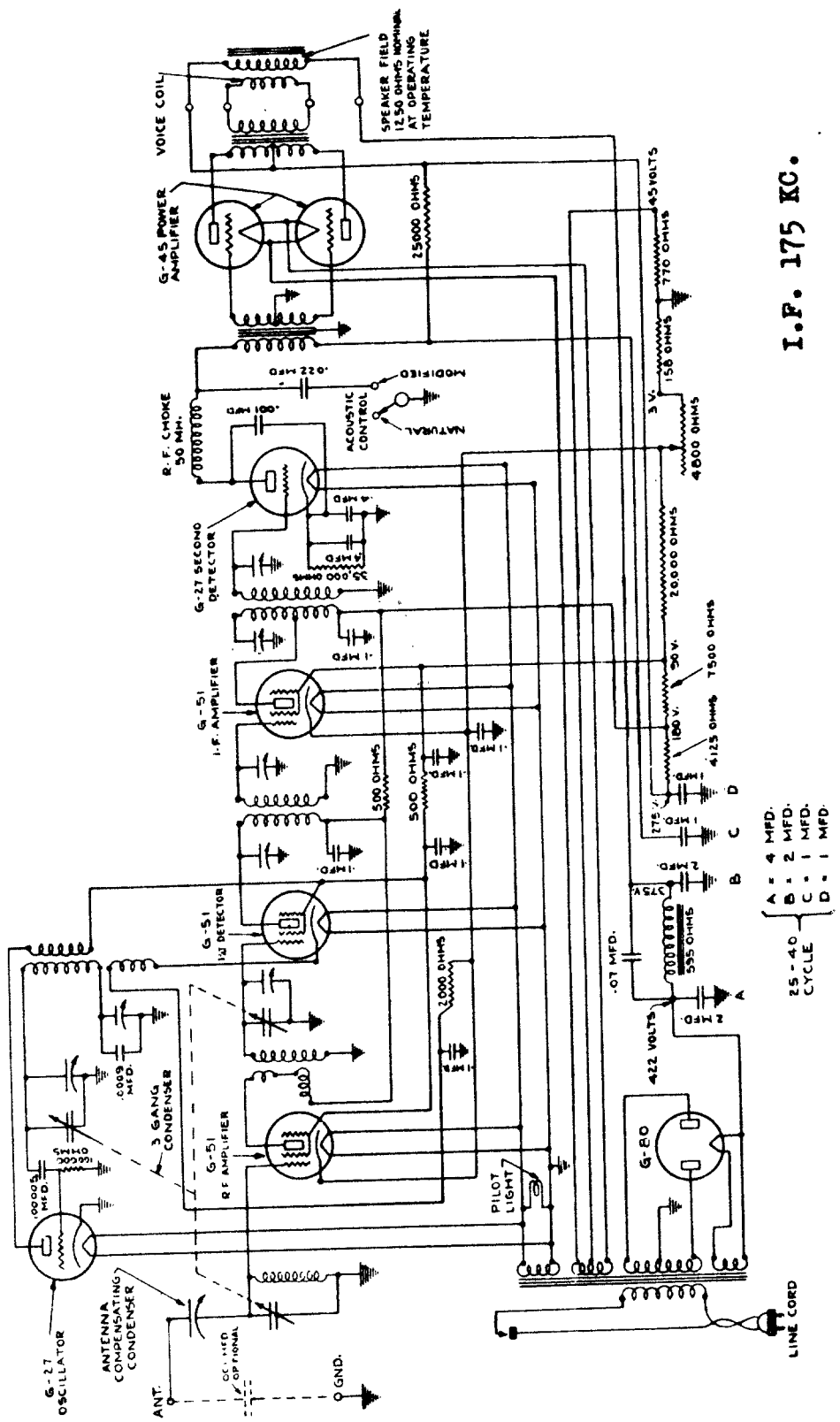

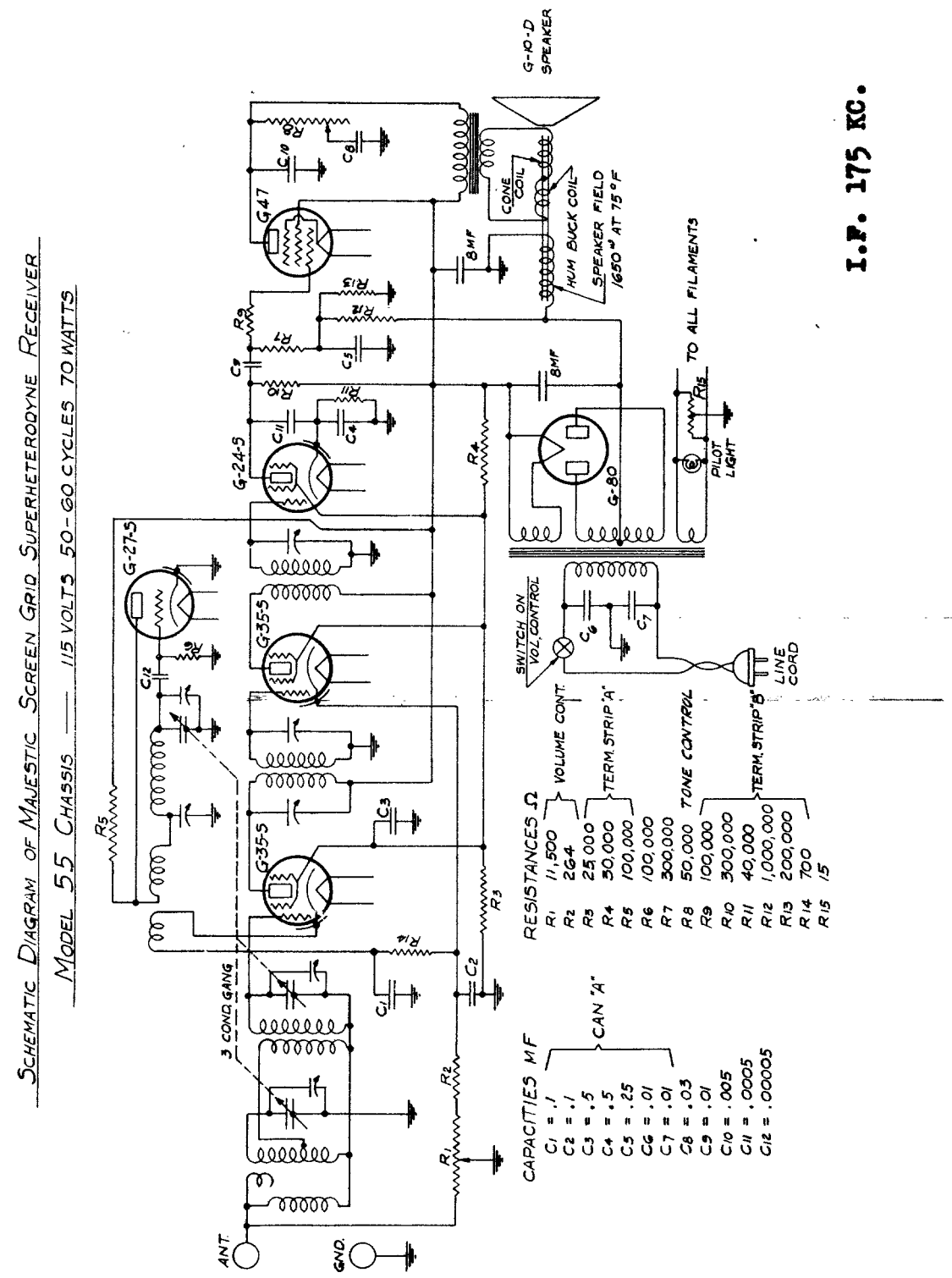
SCHEMATIC DIAGRAM OF MAJESTIC SCREEN GRID SUPERHETERODYNE RECEIVER
MODEL 55 CHASSIS — 115 VOLTS 50-60 CYCLES 70 WATTS
I.F. 175 KC.
G-10-D SPEAKER
CONE COIL
HUM BUCK COIL
SPEAKER FIELD 1650 Ω AT 75°F
TO ALL FILAMENTS
PILOT LIGHT
SWITCH ON VOL. CONTROL
LINE CORD
VOLUME CONT.
TERM. STRIP "A"
TONE CONTROL
TERM. STRIP "B"
3 COND. GANG
CAN "A"
ANT.
GND.
G-27-5
G-24-5
G-35-5
G-35-5
G-47
G-80
RESISTANCES Ω
R1 11,500
R2 264
R3 25,000
R4 30,000
R5 100,000
R6 100,000
R7 300,000
R8 50,000
R9 100,000
R10 300,000
R11 40,000
R12 1,000,000
R13 200,000
R14 700
R15 15
CAPACITIES MF
C1 = .1
C2 = .1
C3 = .5
C4 = .5
C5 = .25
C6 = .01
C7 = .01
C8 = .03
C9 = .01
C10 = .005
C11 = .0005
C12 = .00005

SCHEMATIC DIAGRAM OF MAJESTIC SCREEN GRID SUPERHETERODYNE AUTOMATIC VOLUME CONTROL RECEIVER - MODEL 60 CHASSIS 115 AND 220 VOLTS,

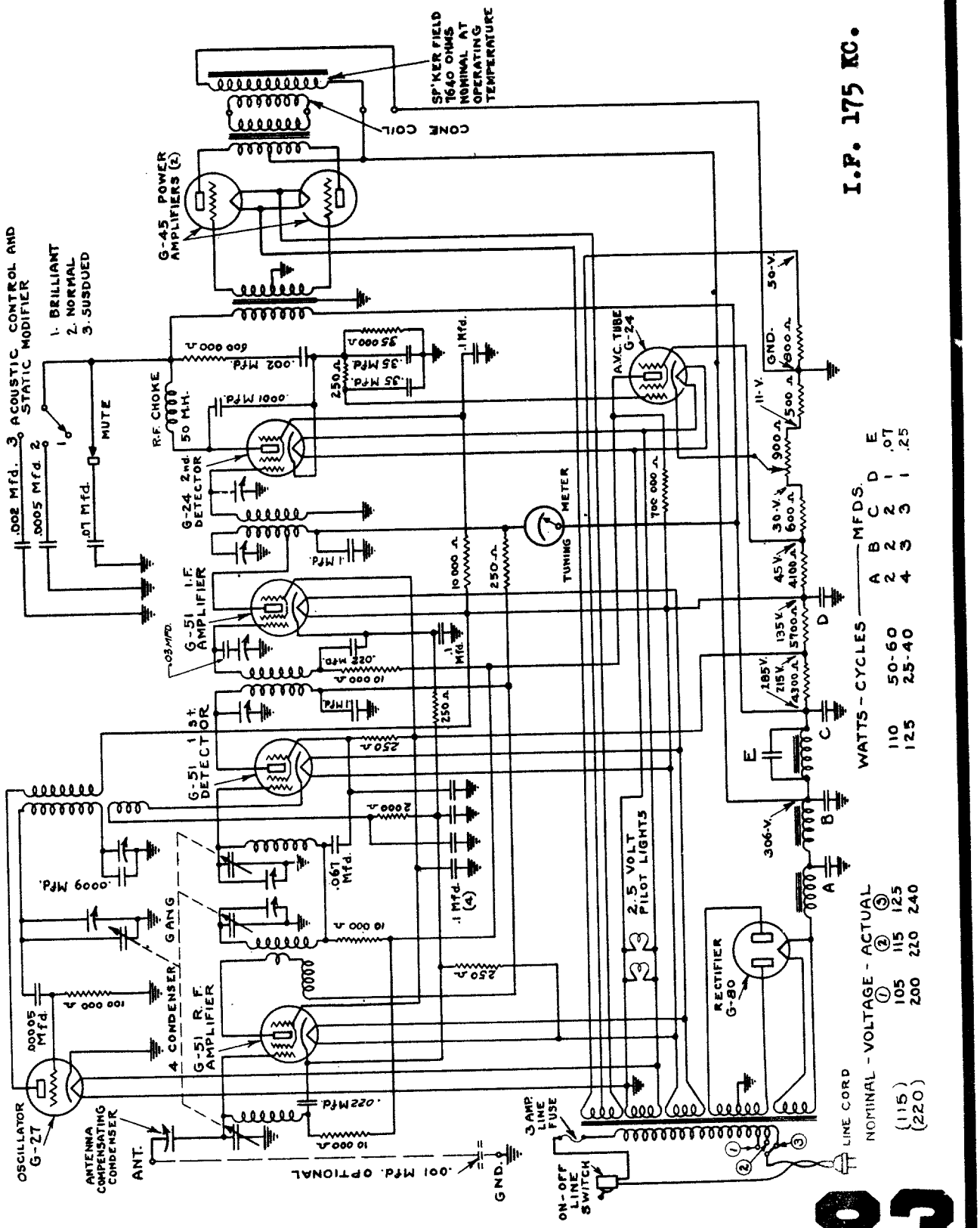

SCHEMATIC DIAGRAM OF MAJESTIC MODEL 66 AUTOMOBILE RECEIVER.

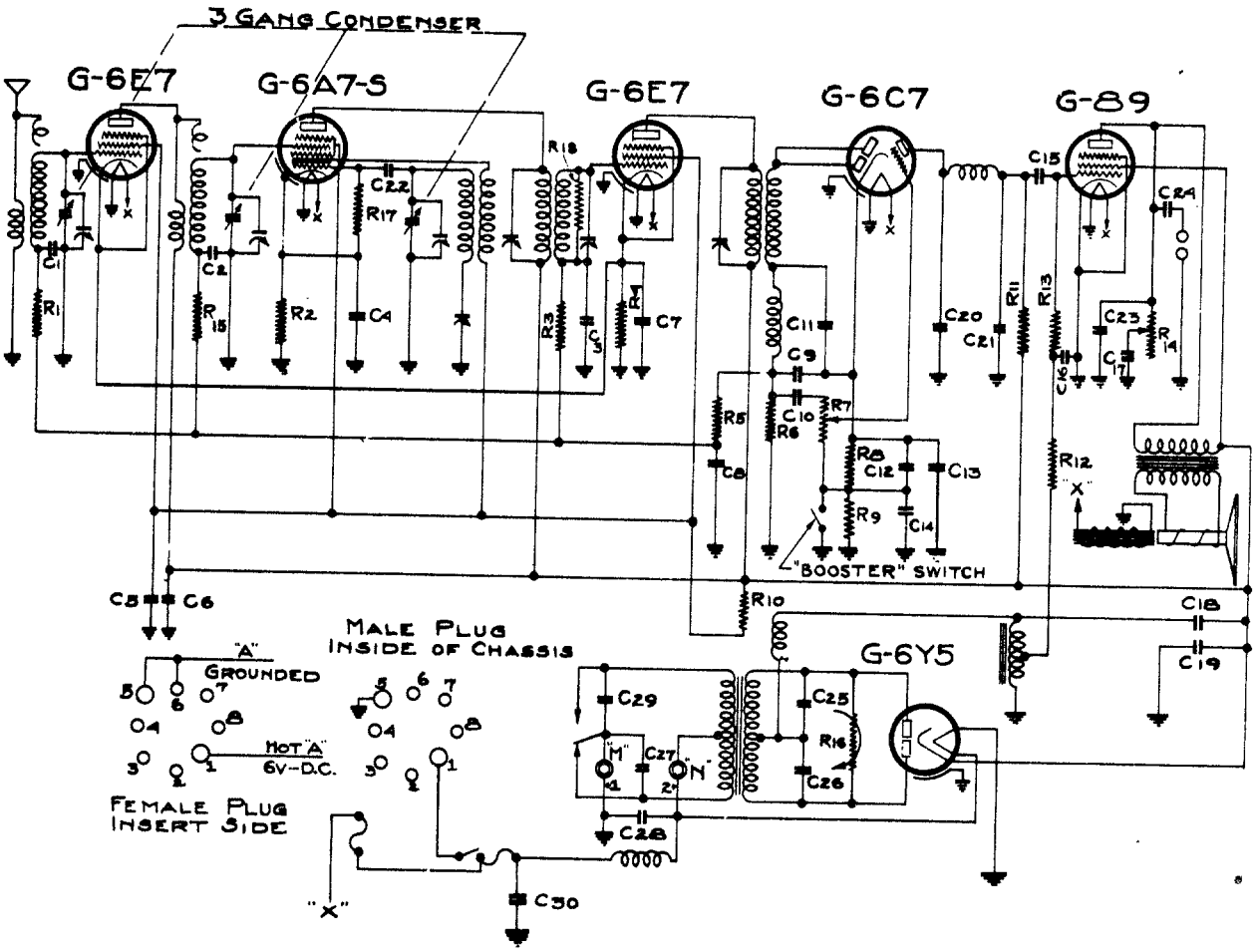

CONDENSERS

C1—.03	C16—.25
C2—.03	C17—.02
C3—.01	C18—8.0
C4—.1	C19—8.0
C5—.25	C20—.0005
C6—.25	C21—.0005
C7—.25	C22—.00025
C8—.03	C23—.005
C9—.0005	C24—.1
C10—.03	C25—.008
C11—.0005	C26—.008
C12—10.	C27—.1
C13—.25	C28—.5
C14—.25	C29—.1
C15—.03	C30—.5

RESISTORS

R1—300,000	R10—10,000
R2—250	R11—200000
R3—300,000	R12—250000
R4—400	R13—250000
R5—300,000	R14—50,000
R6—100,000	R15—300,000
R7—200,000	R16—500,000 GLOBAR
R8—2,500	R17—50,000
R9—10,000	R18—1,000,000

I.F. 175 KC.

NOTE

WHEN A+ IS GROUNDED VIBRATOR LEAD #1 (BLUE) SHOULD CONNECT TO TERMINAL "M" (VIBRATOR ARMATURE) AND LEAD #2 (BLACK) SHOULD CONNECT TO TRANS. PRIMARY CENTER TAP (TERMINAL "N") WHEN A- IS GROUNDED REVERSE ABOVE CONNECTIONS.

COMPILED BY M. N. BEITMAN, SUPREME PUBLICATIONS

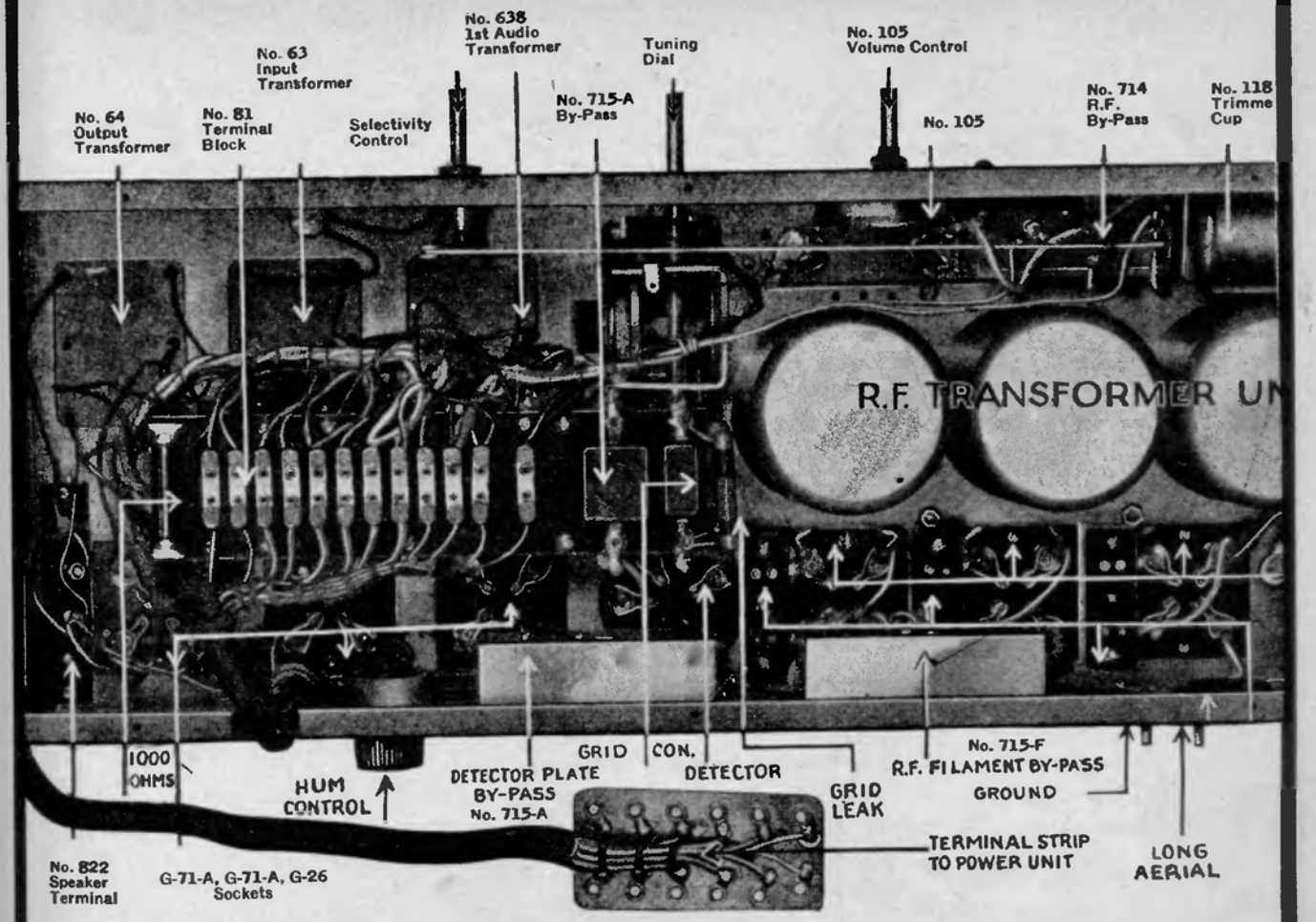

CHASSIS 70 and 70-B

Models 71 and 72

TUBES

R. F.	G-26	1st A. F.	G-26
R. F.	G-26	P. P. Ampl.	G-71-A
R. F.	G-26	P. P. Ampl.	G-71-A
Det.	G-27	G-80 Rect.	Power Unit

THE CIRCUIT

Tuned Radio Frequency. Built upon unit assembly plan.

Chassis. Has the 3 A.F. transformers, the volume control and input circuit, sockets, balancing condensers and by-pass condensers.

Tuning Condenser. 4 gang variable condenser, dial lamp and dial.

R.F. Transformers. Entirely Contained in shield, with leads that connect to various parts.

Terminal Strip. Includes power cable, grid condenser, grid leak, detector plate R.F. by-pass condenser, 2 center tapped resistances and 2 bias resistance units.

Wiring Cable. Accomplishes the internal wiring of receiver.

INPUT SYSTEM AND VOLUME CONTROL

The volume control is effected in the input circuit, making a smooth control due to the fact that R.F. amplifiers are functioning at maximum efficiency at any degree of volume. A potentiometer is placed across the .001 condenser with the movable arm attached to the antenna and controls signal voltage impressed across this condenser.

SELECTIVITY CONTROL

Integral with the input system is the antenna trimmer, which operates to vary the inductance of the antenna input coil and permits adjusting the input circuit to exact resonance with the other 3 tuned circuits.

SCHEMATIC DIAGRAM FOR MODEL 70B MAJESTIC RECEIVER

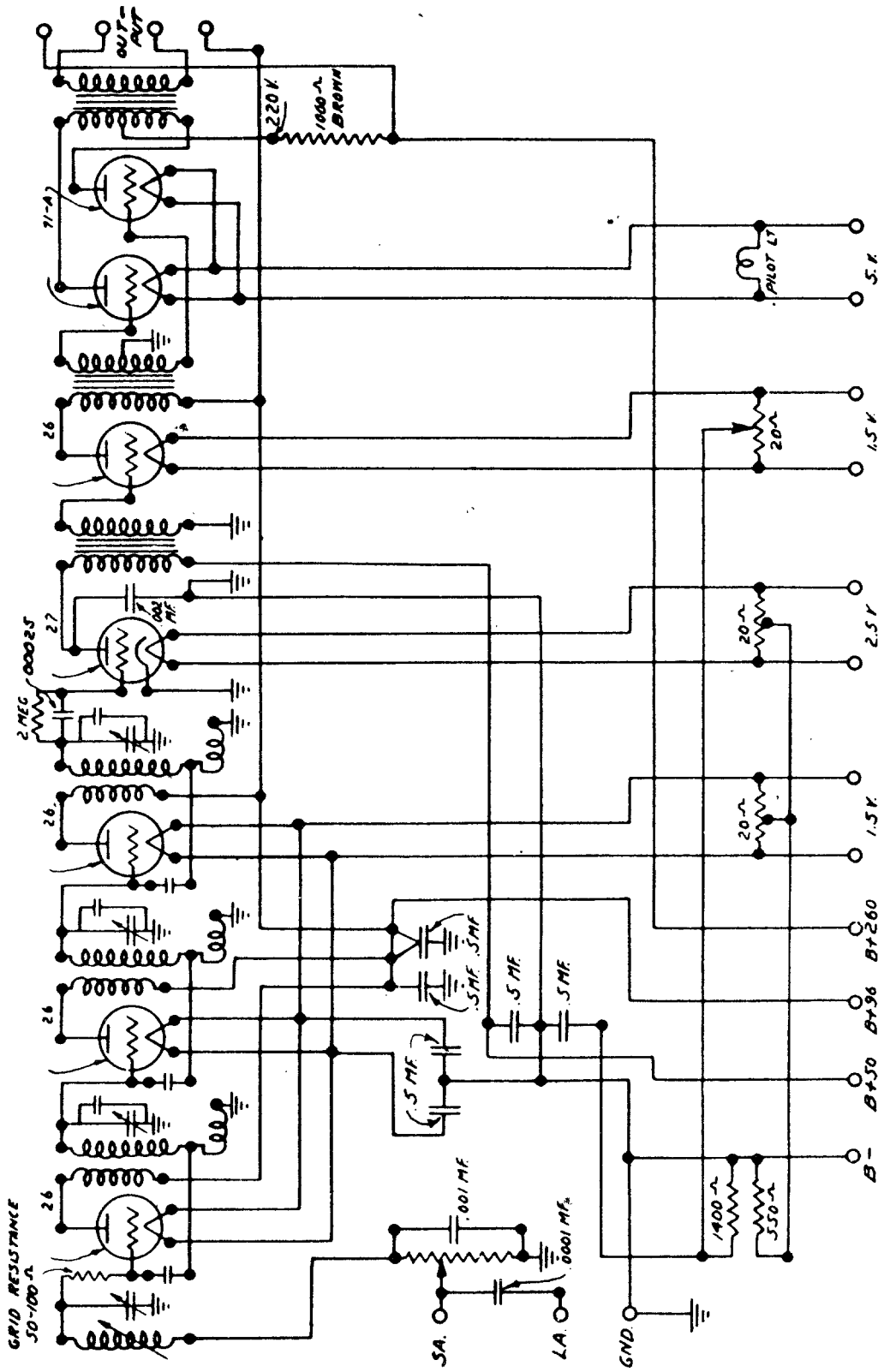

CHASSIS 90

Models 91, 92

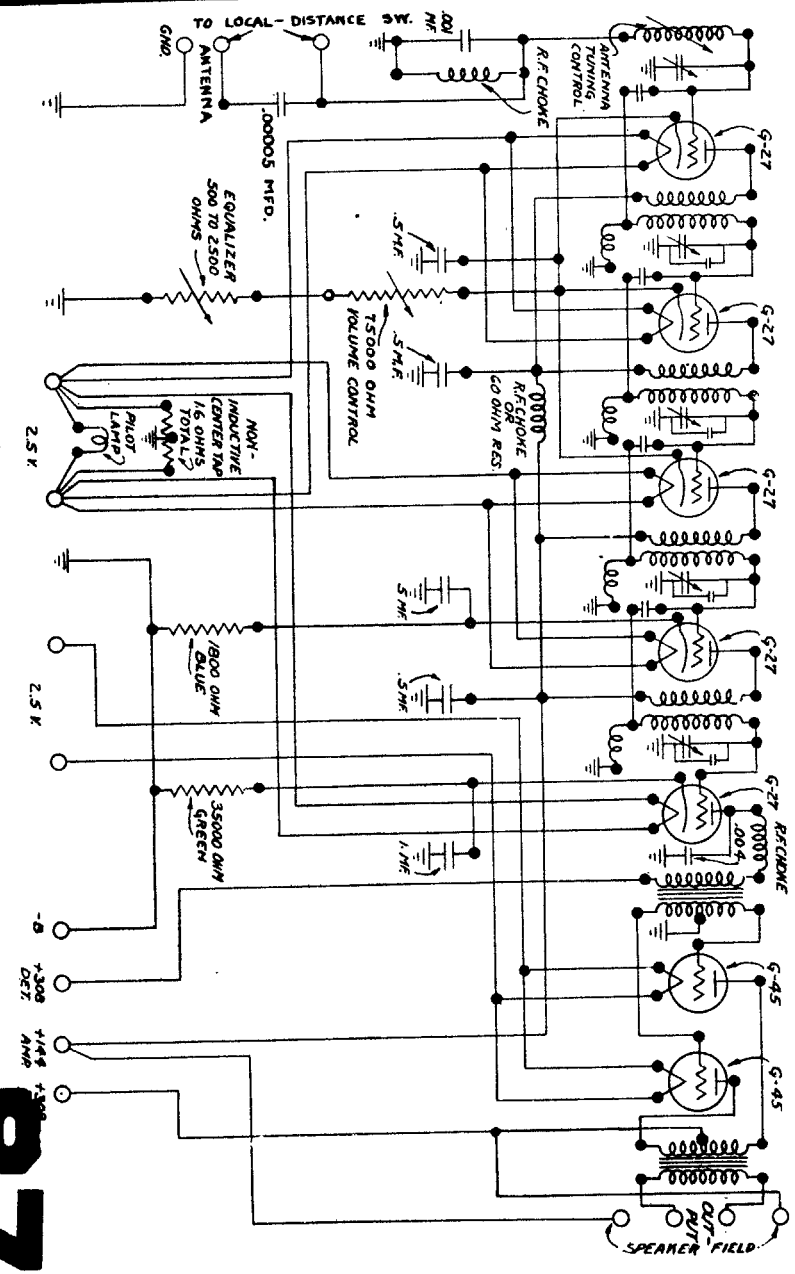

METHOD OF BIASING

Grid Biasing of the various tubes is accomplished by grounding the grids and applying a positive potential to the cathodes of three tubes.

The biasing of the first, second and third R.F. Tubes is accomplished by the use of a variable resistance from 500 to 2,500 Ohm, which is in series with the volume control resistance and is known as the Equalizer. It is mounted on the rotor shaft of the variable gang condenser and the movable arm turns as the rotor plates are moved. A potential of from 8 to 15 Volt is applied, depending on the tuning dial frequency. The Equalizer is adjusted for a resistance of 1,500 Ohm at 1,000 kilocycles, 500 Ohm at 550 kilocycles, 2,500 Ohm at 1,500 kilocycles, with 15% allowable variation for the last two measurements. The equalizer adjustment arm is secured by a set screw to the back of the gang condenser frame.

The position and tightness of this arm is important. Make sure that the set screw holding the Equalizer Shaft to the gang condenser just inside the gang frame is against the flat portion of the equalizer shaft.

BIASING	RESISTOR	BIAS VOLTAGE
4th R. F. Stage	1,800 Ohm	9
Detector	35,000 Ohm	32
45	800 Ohm	On Power Unit Terminal Strip

ALIGNING AND BALANCING

Make certain that resonance is obtained for each stage, using both Master Tuning Control and Trimmer. When using dummy tube for balancing, place shield over it, to include capacity effect of shield. A dummy tube having a Grid to Plate of appr. 3.4 m.m.f. is suggested, as this capacity is used when receiver was originally balanced. PROCEDURE OF BALANCING IS THE SAME AS FOR CHASSIS 70, 70B

ANTENNA SWITCH

To prevent distortion of tone from close-by powerful transmitters on moderately long antenna, snap switch to "Local" position. Use "Distance" position for stations with less powerful reception.

POWER UNIT

The Power Unit 9-P-6 and 9-P-3 is described on Page 79.

INPUT CIRCUIT

On early production models, a fixed condenser of .0001 MFD. capacity is used, on later production a condenser of .00005 MFD. for the input circuit.

TABLE OF VOLTAGES

The voltage readings given below were taken with the receiver turned to 550 Kilocycles, and the volume control set at maximum. When taking comparative readings, be certain that receiver is tuned to 550 kilocycles and volume control is set at maximum.

Purpose	Tube Type	A Volts	B Volts	C Volts	Cathode Volts	Normal Plate M.A.
1st R. F.	27	2.35	130	8	8	5.5
2nd R. F.	27	2.35	130	8	8	5.5
3rd R. F.	27	2.35	130	8	8	5.5
4th R. F.	27	2.35	130	9	9	5.0
Detector	27	2.35	270	30	30	1
Power	45	2.45	250	50	..	32
Power	45	2.45	250	50	..	32
Rectifier	80	...	...	..	..	..

Line Voltage 115 A. C.

CHASSIS 90-B

Models 90, 91, 93

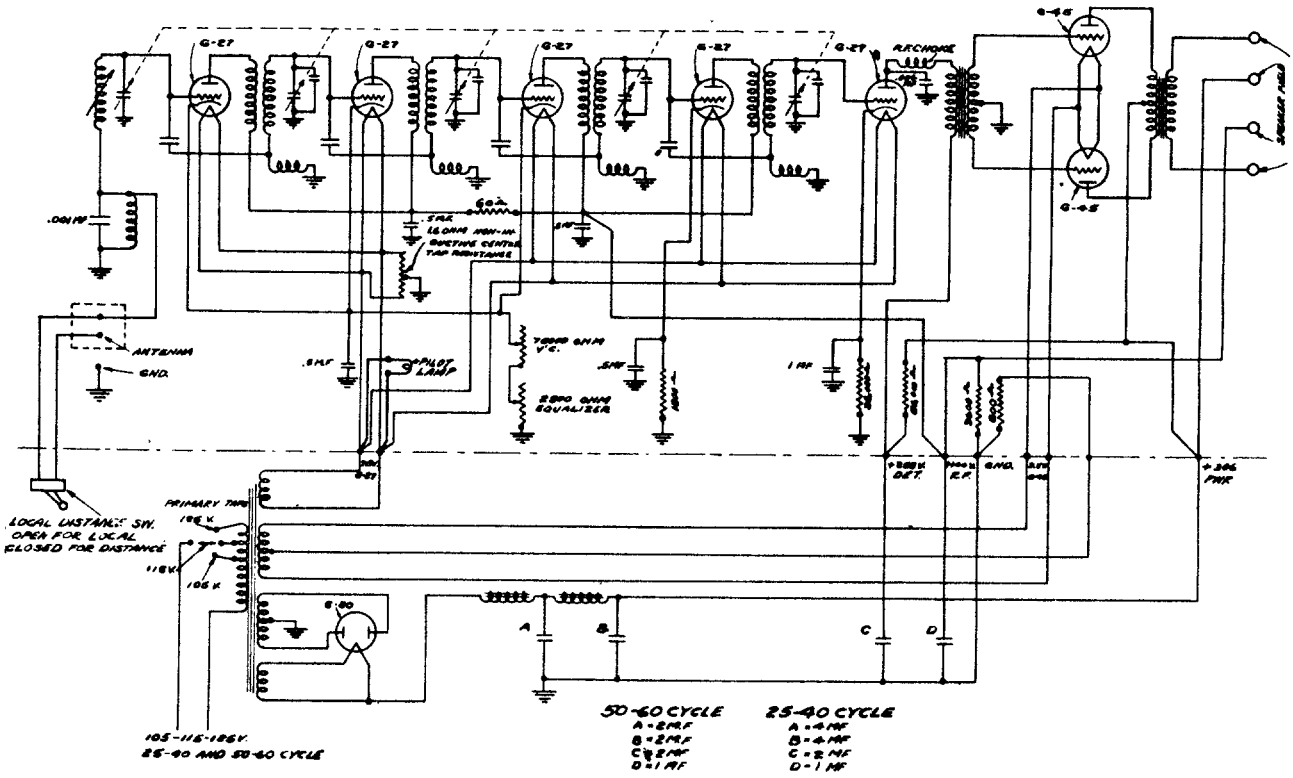

ANTENNA SWITCH

To prevent distortion of tone from close-by powerful transmitters on moderately long antenna, snap switch to "Local" position. Use "Distance" position for stations with less powerful reception.

ADJUSTMENT FOR LINE VOLTAGE

On the left side, directly in front of the G-80 Socket, you will note a small plate. Determine with A. C. Voltmeter or from local power company the average line voltage.

Upon removing the adjustment plate, you will find three taps, marked 105 Volts, 115 Volts and 125 Volts.

TABLE OF VOLTAGES

The voltage readings given below were taken with the receiver turned to 550 kilocycles, and the volume control set at maximum. When taking comparative readings, be certain that receiver is tuned to 550 kilocycles and volume control is set at maximum.

Tube Purpose	Type	Filament Voltage	Plate Voltage	Grid Bias Voltage	Cathode Volts	Normal Plate Milli-amperes
1st R. F.	G-27	2.35	130	8	8	5.5
2nd R. F.	G-27	2.35	130	8	8	5.5
3rd R. F.	G-27	2.35	130	8	8	5.5
4th R. F.	G-27	2.35	130	9	9	5.0
Detector	G-27	2.35	230	25	25	.8
Power	G-45	2.45	250	50	..	32
Power	G-45	2.45	250	50	..	32
Rectifying	G-80	...	...	..	..	..

Line Voltage 115 A. C. on 115 volt tap.

THE CIRCUIT

The T.R.F. balanced circuit is employed with a single control, five gang condenser. The detector output is fed directly to the push-pull audio stage. The selectivity control or trimmer functions by varying the inductance of the antenna input coil and permits adjustin the input circuit to exact resonance with the other turned circuits.

The R. F. Unit assembly (No. 1434) includes the radio frequency transformers with shields, the R. F. Sockets, the balancing condensers and the radio frequency, cathode and plate By-Pass Condensers. The terminal strip includes one 800 Ohm, one 1,800 Ohm and one 50,000 Ohm Resistor, being the bias resistors of the Power Tubes, the 4th R.F. Tube and the Detector Plate resistance respectively.

POWER SUPPLY

Composed of Power Transformer, a Choke Unit and Condenser Bank for the filter system. The resistors (800 and 3,600 Ohm) are placed on terminal strip. A Type G-80 Rectifying tube is used.

COMPILED BY M. N. BEITMAN, SUPREME PUBLICATIONS

MAJESTIC-MODEL 116-AUTOMOBILE RECEIVER

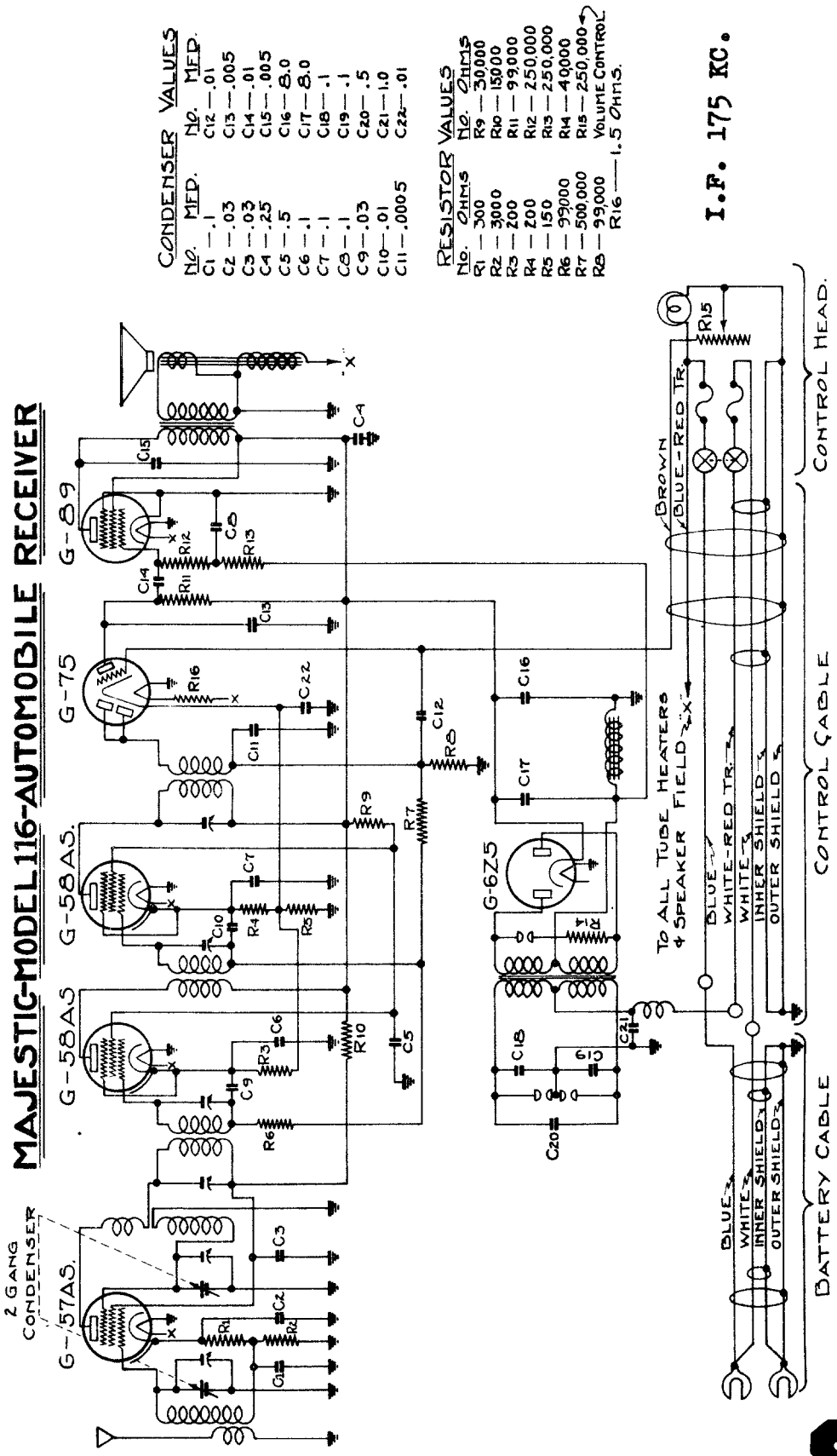

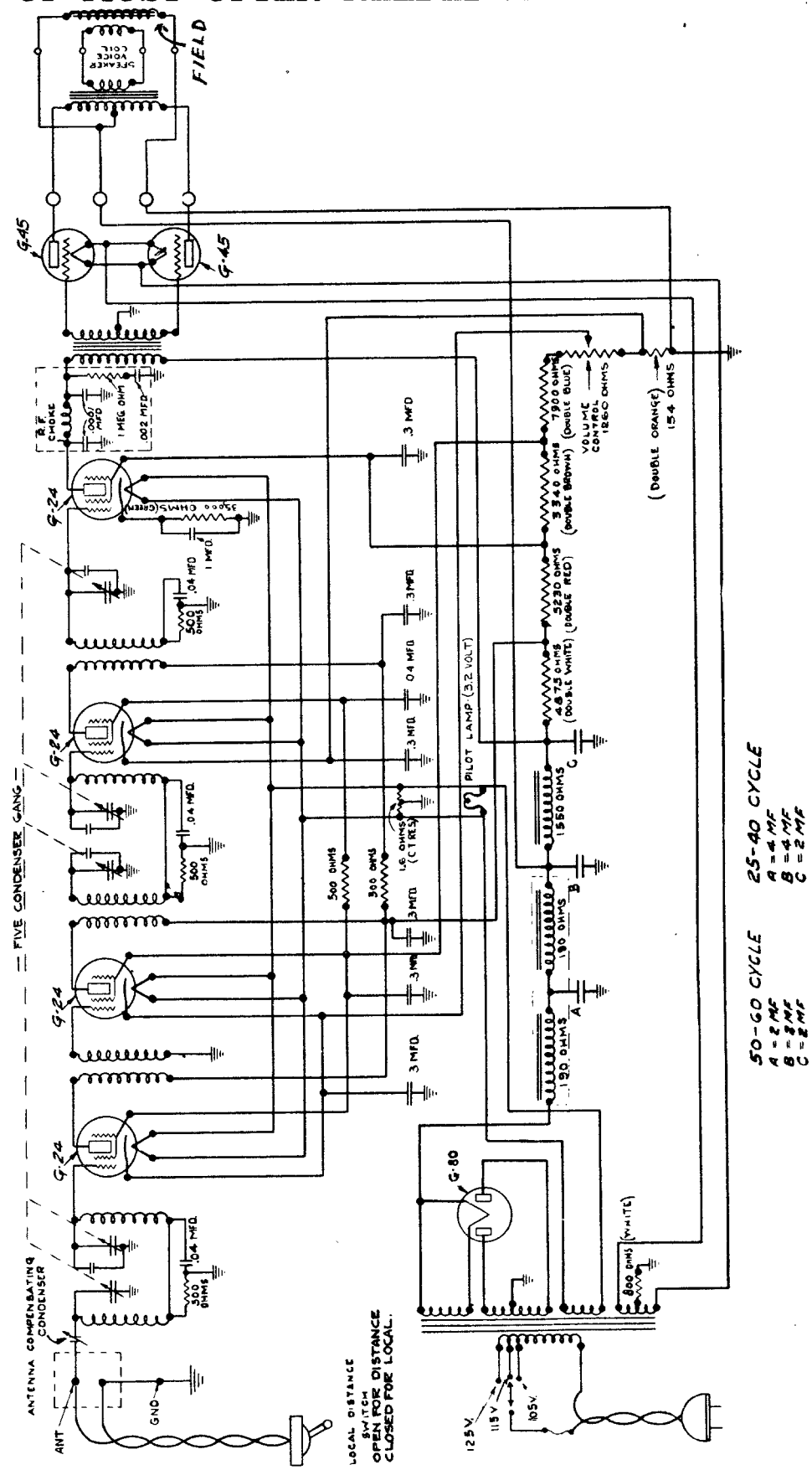
SCHEMATIC DIAGRAM of MAJESTIC SUPER SCREEN GRID RECEIVER
MODEL 130-A CHASSIS 25-40 & 50-60 CYCLE
SPEAKER VOICE COIL
FIELD
G-45
G-45
R.F. CHOKE
.0001 MFD
1 MEG OHM
.002 MFD
G-24
35000 OHMS (GREEN)
1 MFD
.04 MFD
500 OHMS
G-24
.04 MFD
500 OHMS
G-24
.04 MFD
500 OHMS
G-24
.04 MFD
500 OHMS
FIVE CONDENSER GANG
ANTENNA COMPENSATING CONDENSER
ANT
GND
.3 MFD
.3 MFD
.04 MFD
.3 MFD
.3 MFD
.3 MFD
.3 MFD
500 OHMS
300 OHMS
1.6 OHMS (CT RES.)
PILOT LAMP (3.2 VOLT)
7900 OHMS (DOUBLE BLUE)
3340 OHMS (DOUBLE BROWN)
5230 OHMS (DOUBLE RED)
4875 OHMS (DOUBLE WHITE)
VOLUME CONTROL 1250 OHMS
(DOUBLE ORANGE) 154 OHMS
1550 OHMS
190 OHMS
190 OHMS
C
B
A
G-80
(WHITE)
800 OHMS
LOCAL DISTANCE SWITCH
OPEN FOR DISTANCE
CLOSED FOR LOCAL.
125V.
115V.
105V.
25-40 CYCLE
A = 4 MF
B = 4 MF
C = 2 MF
50-60 CYCLE
A = 2 MF
B = 2 MF
C = 2 MF

MANUAL OF MOST-OFTEN-NEEDED RADIO DIAGRAMS

SCHEMATIC DIAGRAM OF MAJESTIC SCREEN GRID SUPERHETERODYNE AUTOMATIC VOLUME CONTROL RECEIVER AND ELECTRIC PHONOGRAPH COMBINATION MODEL 160 CHASSIS 115 AND 220 VOLTS, 25-40 AND 50-60 CYCLES.

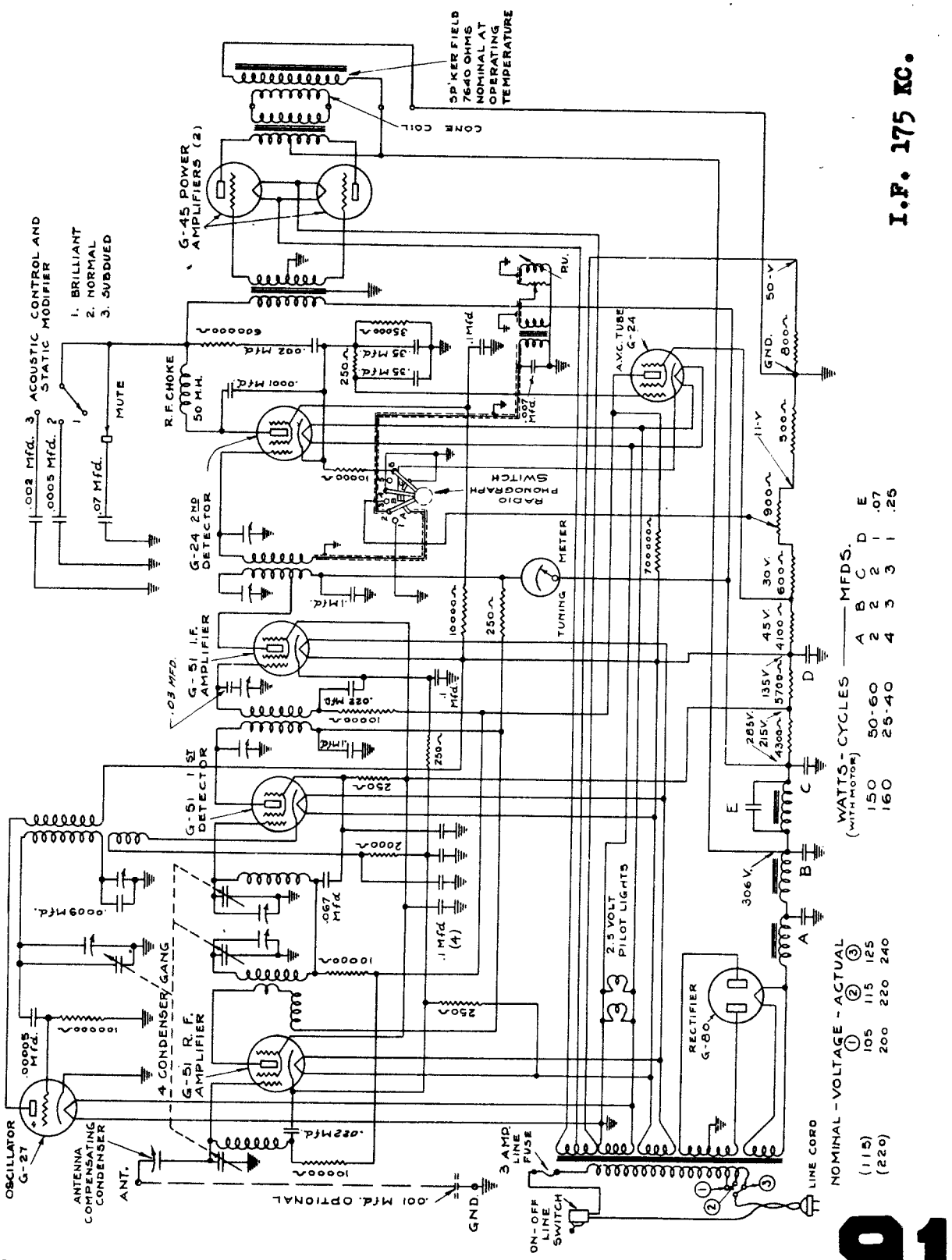

COMPILED BY M. N. BEITMAN, SUPREME PUBLICATIONS

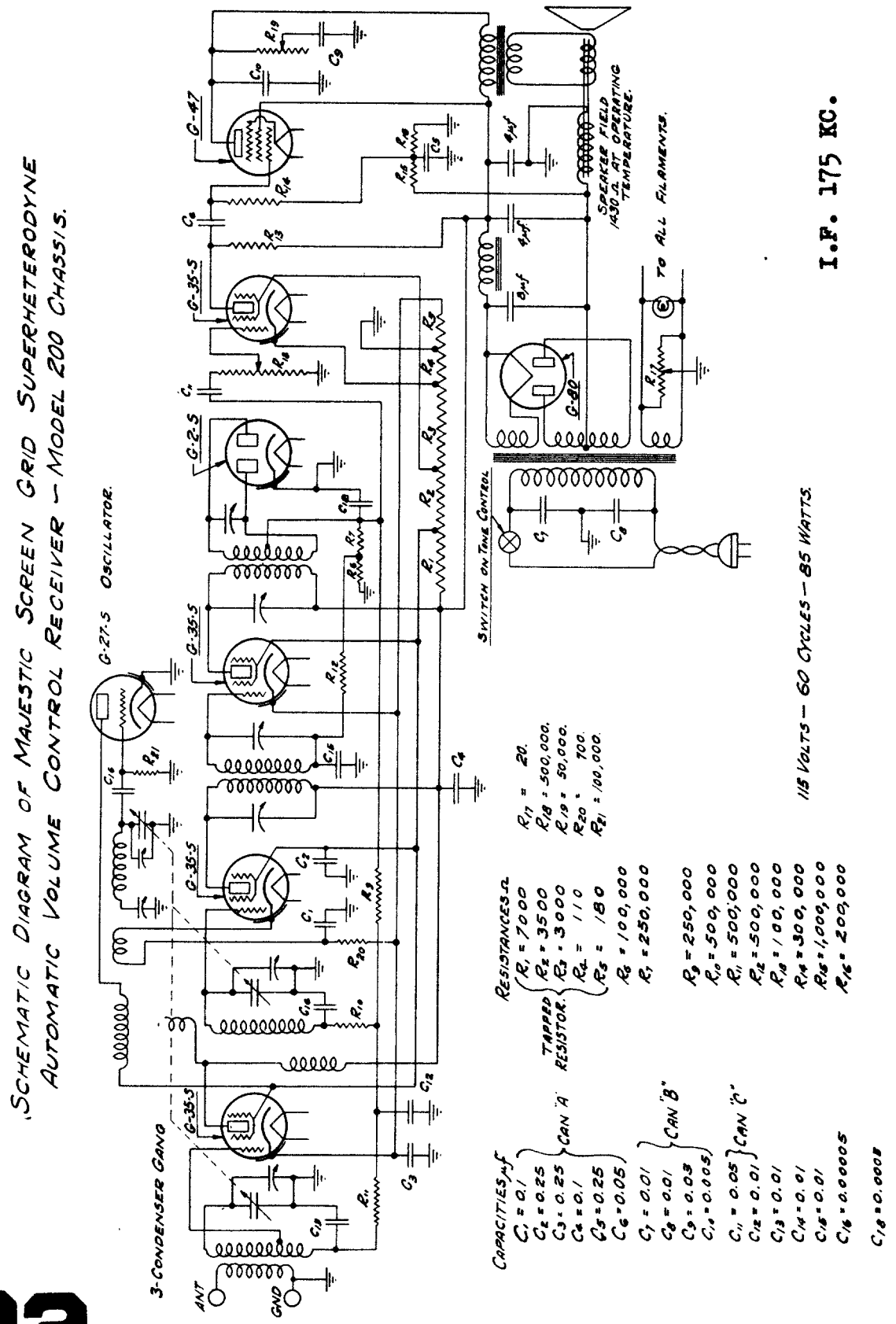
SCHEMATIC DIAGRAM OF MAJESTIC SCREEN GRID SUPERHETERODYNE AUTOMATIC VOLUME CONTROL RECEIVER – MODEL 200 CHASSIS.
G-27-S OSCILLATOR.
G-35-S
G-2-S
G-47
G-80
3-CONDENSER GANG
ANT
GND
SWITCH ON TONE CONTROL
SPEAKER FIELD 1430 Ω AT OPERATING TEMPERATURE.
TO ALL FILAMENTS.
I.F. 175 KC.
115 VOLTS – 60 CYCLES – 85 WATTS.
RESISTANCES Ω
TAPPED RESISTOR.
R1 = 7000
R2 = 3500
R3 = 3000
R4 = 110
R5 = 180
R6 = 100,000
R7 = 250,000
R8 = 250,000
R9 = 500,000
R10 = 500,000
R11 = 500,000
R12 = 100,000
R13 = 300,000
R14 = 1,000,000
R15 = 200,000
R16 = 20.
R17 = 500,000.
R18 = 50,000.
R19 = 700.
R20 = 100,000.
R21
CAPACITIES μf
CAN "A"
C1 = 0.1
C2 = 0.25
C3 = 0.25
C4 = 0.1
C5 = 0.25
C6 = 0.05
CAN "B"
C7 = 0.01
C8 = 0.01
C9 = 0.03
C10 = 0.005
CAN "C"
C11 = 0.05
C12 = 0.01
C13 = 0.01
C14 = 0.01
C15 = 0.01
C16 = 0.00005
C17 = 0.0005

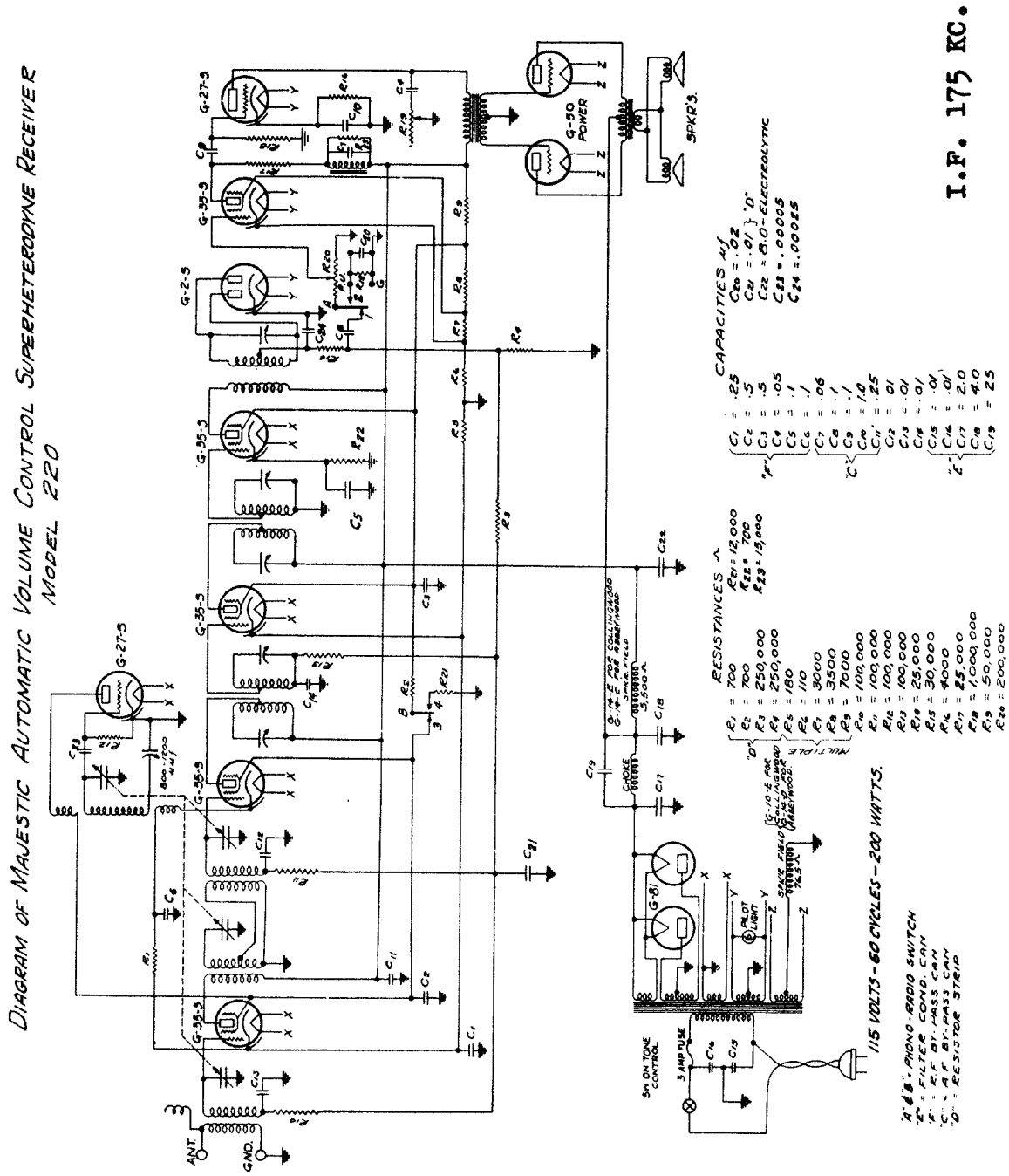
DIAGRAM OF MAJESTIC AUTOMATIC VOLUME CONTROL SUPERHETERODYNE RECEIVER
MODEL 220
I.F. 175 KC.
G-27-5
G-35-5
G-2-5
G-50 POWER
SPKR'S.
G-81
ANT.
GND.
CHOKE
PILOT LIGHT
SW. ON TONE CONTROL
3 AMP FUSE
115 VOLTS - 60 CYCLES - 200 WATTS.
CAPACITIES µf
C1 = .25
C2 = .5
C3 = .5
C4 = .05
C5 = .1
C6 = .1
C7 = .06
C8 = .1
C9 = .1
C10 = 1.0
C11 = .25
C12 = .01
C13 = .01
C14 = .01
C15 = .01
C16 = 2.0
C17 = 4.0
C18 = 4.0
C19 = 25
C20 = .02
C21 = .01 } "D"
C22 = 8.0 - ELECTROLYTIC
C23 = .00005
C24 = .00025
RESISTANCES Ω
R1 = 700
R2 = 700
R3 = 250,000
R4 = 250,000
R5 = 180
R6 = 110
R7 = 3000
R8 = 3500
R9 = 7000
R10 = 100,000
R11 = 100,000
R12 = 100,000
R13 = 100,000
R14 = 25,000
R15 = 30,000
R16 = 4000
R17 = 25,000
R18 = 1,000,000
R19 = 50,000
R20 = 200,000
R21 = 12,000
R22 = 700
R23 = 15,000
"A" & "B" = PHONO-RADIO SWITCH
"E" = FILTER COND. CAN
"F" = R.F. BY-PASS CAN
"C" = A.F. BY-PASS CAN
"D" = RESISTOR STRIP

DIAGRAM of MAJESTIC SUPER SCREEN GRID RECEIVER

MODEL 230-A CHASSIS

25-40 & 50-60 CYCLE

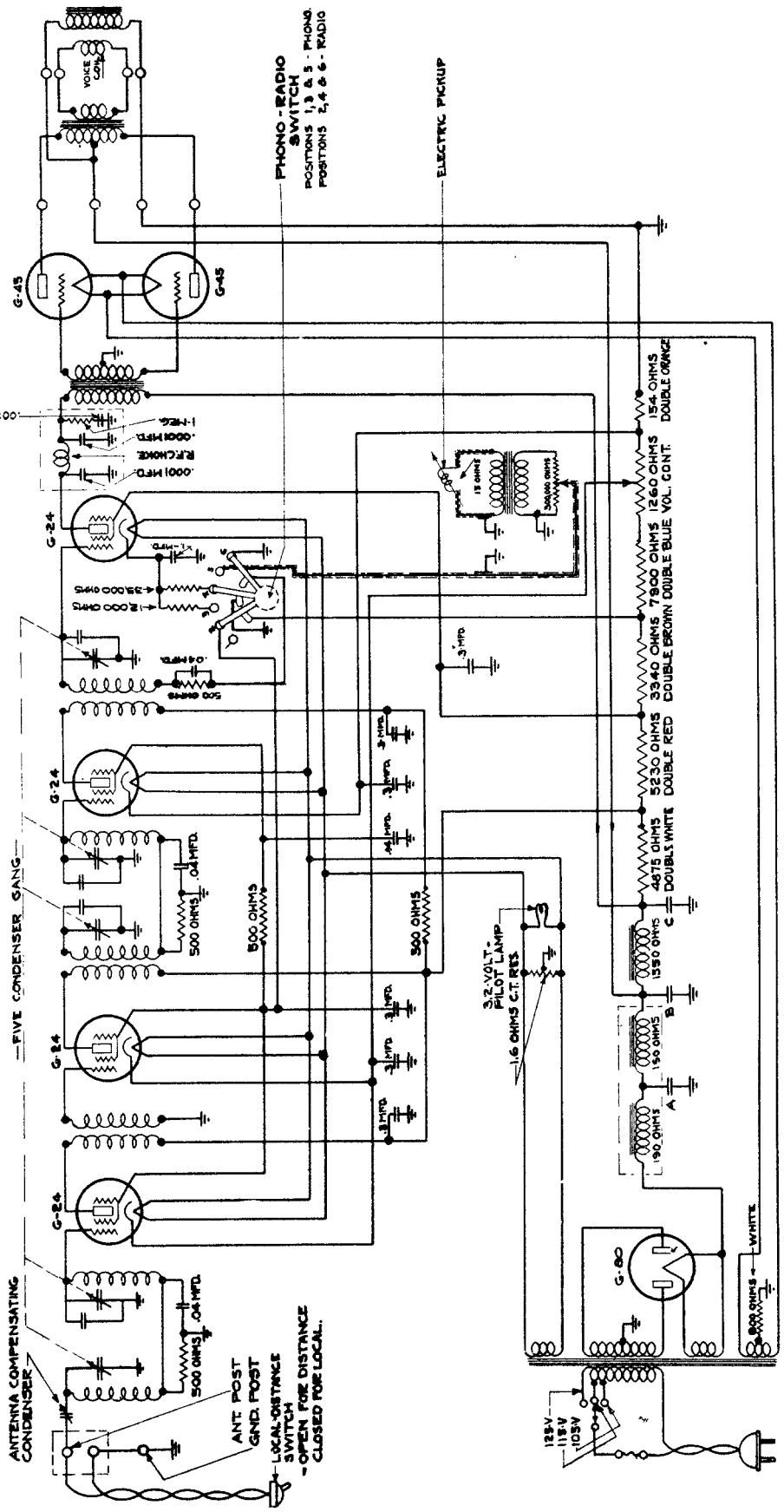

DIAGRAM OF MAJESTIC SCREEN GRID SUPERHETERODYNE
AUTOMATIC VOLUME CONTROL RECEIVER MODEL 290 — 115 VOLTS 50-60 CYCLE

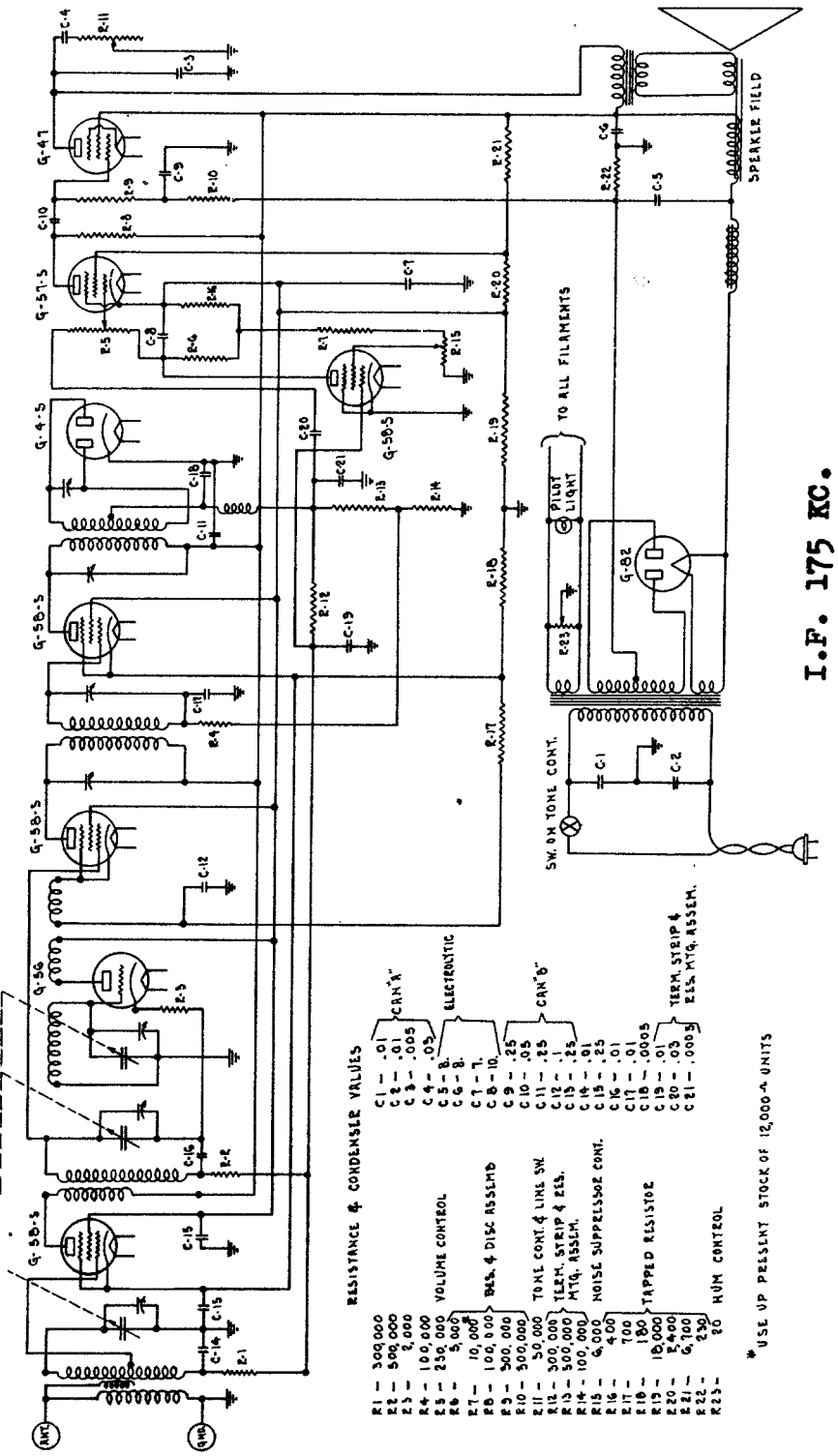

I.F. 175 KC.

DIAGRAM OF MAJESTIC AUTOMATIC VOLUME CONTROL SUPERHETERODYNE

MODEL 330

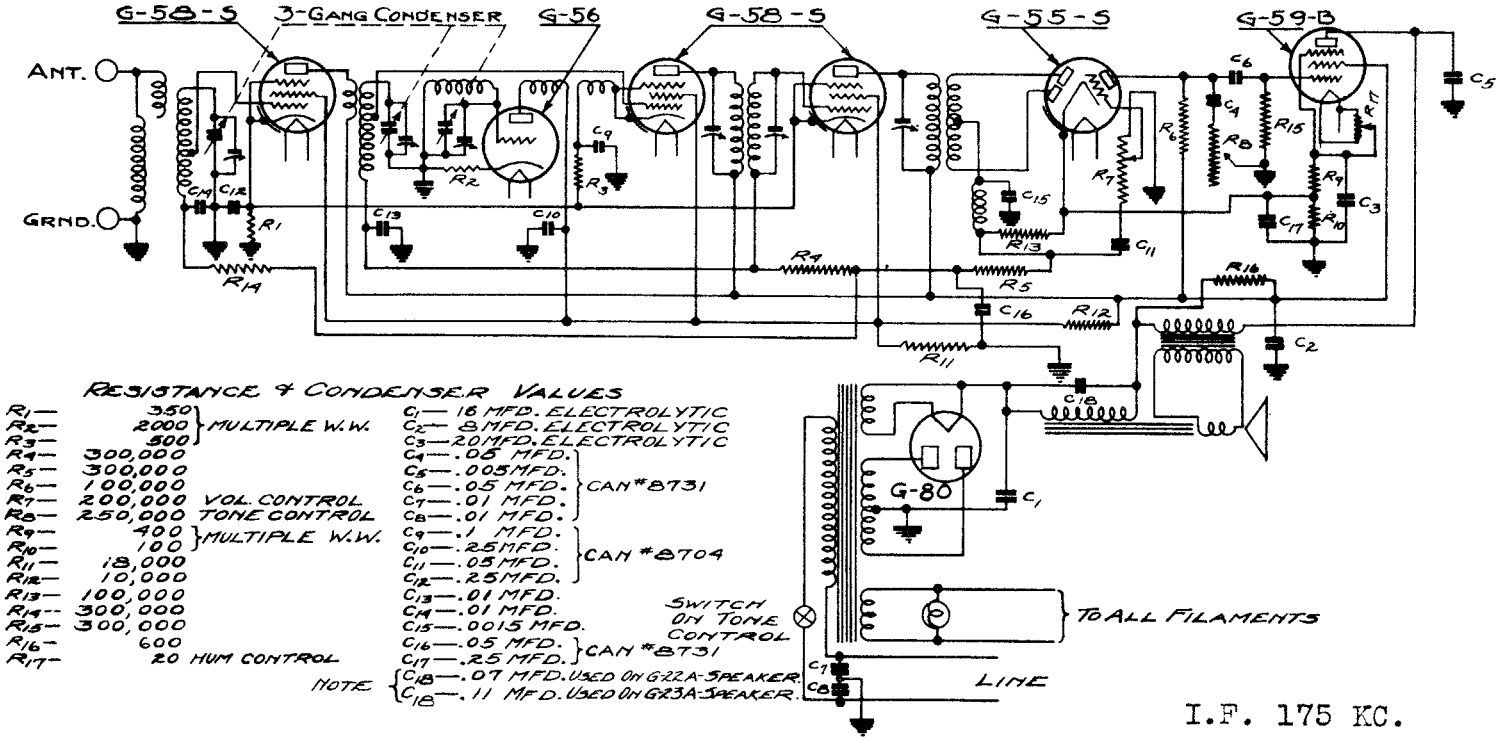

RESISTANCE & CONDENSER VALUES

R_1 —	350	MULTIPLE W.W.
R_2 —	2000	MULTIPLE W.W.
R_3 —	500	MULTIPLE W.W.
R_4 —	300,000	
R_5 —	300,000	
R_6 —	100,000	
R_7 —	200,000	VOL. CONTROL
R_8 —	250,000	TONE CONTROL
R_9 —	400	MULTIPLE W.W.
R_{10} —	100	MULTIPLE W.W.
R_{11} —	18,000	
R_{12} —	10,000	
R_{13} —	100,000	
R_{14} —	300,000	
R_{15} —	300,000	
R_{16} —	600	
R_{17} —	20	HUM CONTROL

C_1 —	16 MFD. ELECTROLYTIC
C_2 —	8 MFD. ELECTROLYTIC
C_3 —	20 MFD. ELECTROLYTIC
C_4 —	.05 MFD. (CAN #BT31)
C_5 —	.005 MFD. (CAN #BT31)
C_6 —	.05 MFD. (CAN #BT31)
C_7 —	.01 MFD. (CAN #BT31)
C_8 —	.01 MFD. (CAN #BT31)
C_9 —	.1 MFD. (CAN #BT04)
C_{10} —	.25 MFD. (CAN #BT04)
C_{11} —	.05 MFD. (CAN #BT04)
C_{12} —	.25 MFD. (CAN #BT04)
C_{13} —	.01 MFD.
C_{14} —	.01 MFD.
C_{15} —	.0015 MFD.
C_{16} —	.05 MFD. (CAN #BT31)
C_{17} —	.25 MFD. (CAN #BT31)
NOTE C_{18} —	.07 MFD. USED ON G22A-SPEAKER
NOTE C_{18} —	.11 MFD. USED ON G23A-SPEAKER

I.F. 175 KC.

Automatic volume control bias voltage is developed across resistors R-13 and R-10 and is applied to the grid of the radio frequency, first detector and intermediate frequency tubes to control their amplification.

The manual volume control is a 200,000 ohm potentiometer which is connected in the grid circuit of the G-55-S tube and works entirely independent of the automatic volume control.

MAJESTIC MODEL 360 RECEIVER

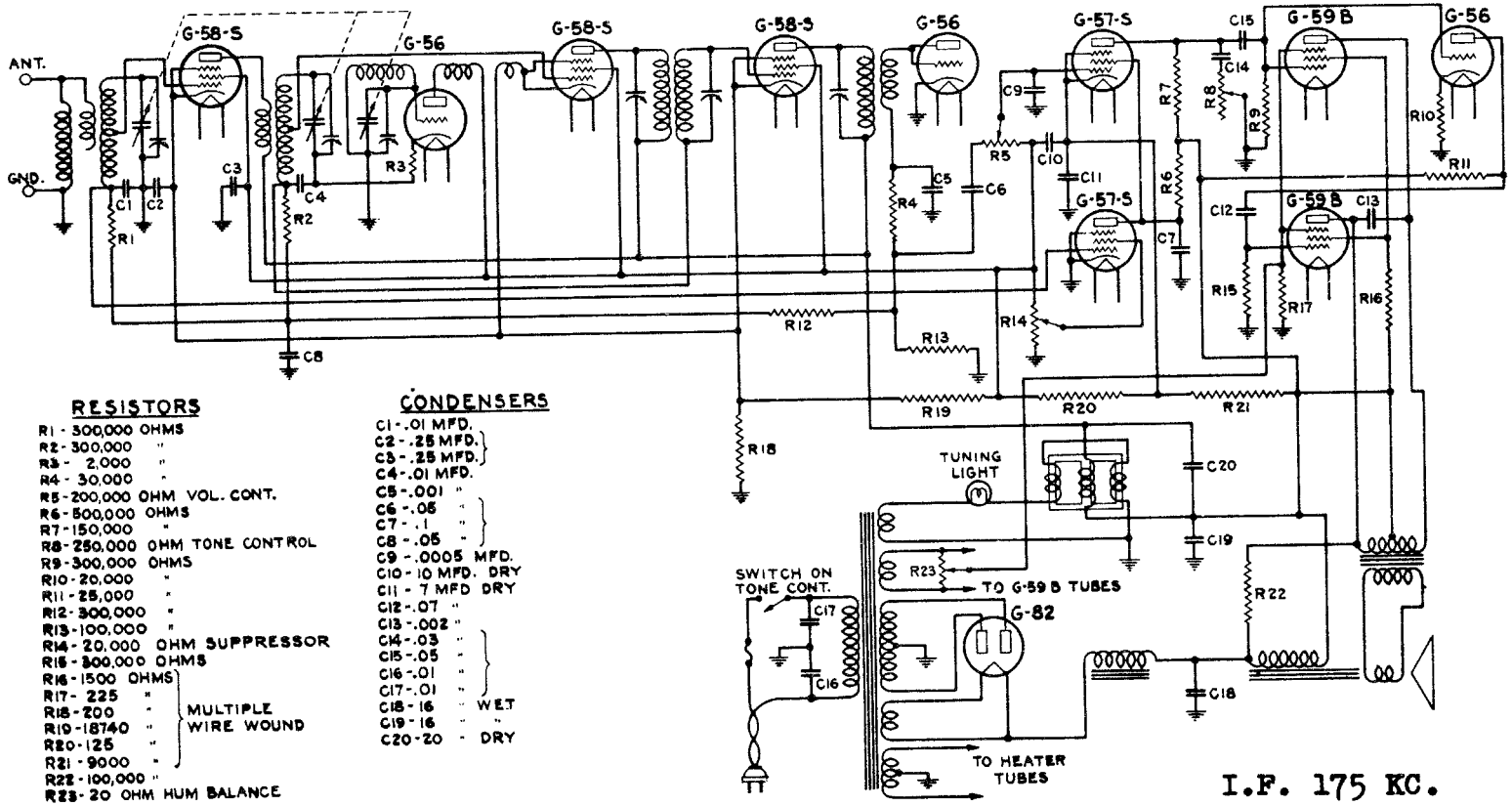

RESISTORS

R1 - 300,000 OHMS
R2 - 300,000 "
R3 - 2,000 "
R4 - 30,000 "
R5 - 200,000 OHM VOL. CONT.
R6 - 500,000 OHMS
R7 - 150,000 "
R8 - 250,000 OHM TONE CONTROL
R9 - 300,000 OHMS
R10 - 20,000 "
R11 - 25,000 "
R12 - 300,000 "
R13 - 100,000 "
R14 - 20,000 OHM SUPPRESSOR
R15 - 300,000 OHMS
R16 - 1500 OHMS } MULTIPLE WIRE WOUND
R17 - 225 "
R18 - 200 "
R19 - 18740 "
R20 - 125 "
R21 - 9000 "
R22 - 100,000 "
R23 - 20 OHM HUM BALANCE

CONDENSERS

C1 - .01 MFD.
C2 - .25 MFD. } C3 - .25 MFD.
C4 - .01 MFD.
C5 - .001 "
C6 - .05 " } C7 - .1 " } C8 - .05 "
C9 - .0005 MFD.
C10 - 10 MFD. DRY
C11 - 7 MFD DRY
C12 - .07 "
C13 - .002 "
C14 - .03 " } C15 - .05 " } C16 - .01 " } C17 - .01 "
C18 - 16 " WET
C19 - 16 " "
C20 - 20 " DRY

The Model 360 is an eleven tube chassis designed for single speaker operation in the Model 363 receiver. This chassis is very similar to the Model 300 chassis in that it provides Synchro-Silent Tuning, resistance coupled push-pull output, reactance dimmer action and automatic volume control. The tubes employed and their respective stages are as follows: G-58-S, R.F. amplifier; G-56, Oscillator: G-58-S, first detector; G-58-S, I.F. amplifier; G-56, second detector; G-57-S, first audio amplifier, G-57-S, suppressor; G-56, phase rotator; two G-59-B push-pull output and G-82 rectifier.

MODEL 400 CHASSIS

and

MODEL G-26-C SPEAKER

SCHEMATIC DIAGRAM OF MAJESTIC SCREEN GRID A.C.-D.C. SUPERHETERODYNE RECEIVER MODEL-400

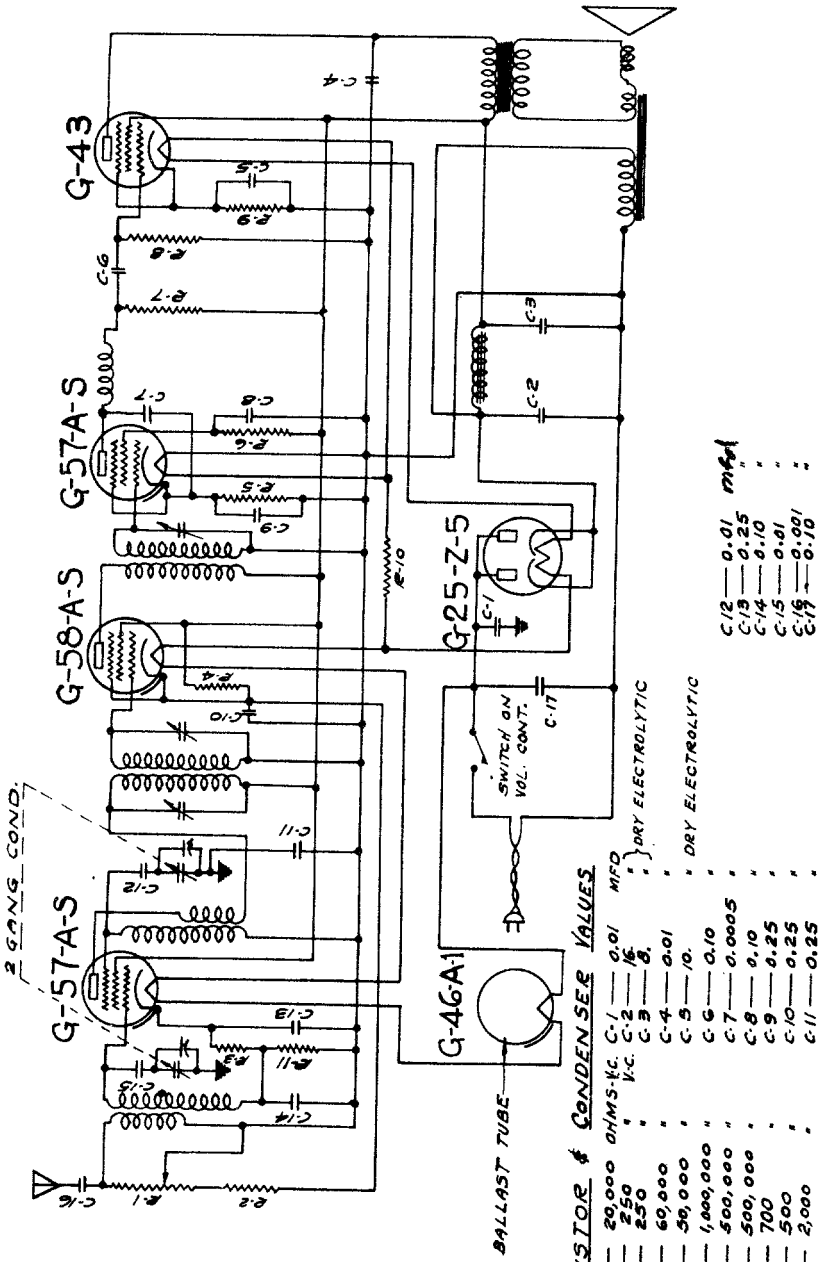

RESISTOR		CONDENSER		VALUES
R-1	20,000 OHMS	C-1	0.01 MFD	
R-2	250 "	C-2	16 "	
R-3	250 "	C-3	8 "	
R-4	60,000 "	C-4	0.01 "	
R-5	50,000 "	C-5	10. "	
R-6	1,000,000 "	C-6	0.10 "	
R-7	500,000 "	C-7	0.0005 "	
R-8	500,000 "	C-8	0.10 "	
R-9	700 "	C-9	0.25 "	
R-10	500 "	C-10	0.25 "	
R-11	2,000 "	C-11	0.25 "	
		C-12	0.01 mfd	
		C-13	0.25 "	
		C-14	0.10 "	
		C-15	0.01 "	
		C-16	0.001 "	
		C-17	0.10 "	

1 - With the volume control in maximum volume position and the gang condenser completely out of mesh, supply a 456 K.C. signal to the grid of the modulator tube and adjust the 4 I.F. tuning condensers for maximum sensitivity.

ALIGNMENT PROCEDURE

2 - With the gang condenser and volume control in the same position, supply a 1730 K.C. signal to the input of the receiver and align the 2 R.F. trimmer condensers for maximum sensitivity.

COMPILED BY M. N. BEITMAN, SUPREME PUBLICATIONS

SCHEMATIC DIAGRAM OF MAJESTIC SCREEN GRID A.C.-D.C. SUPERHETERODYNE RECEIVER MODEL-400-A

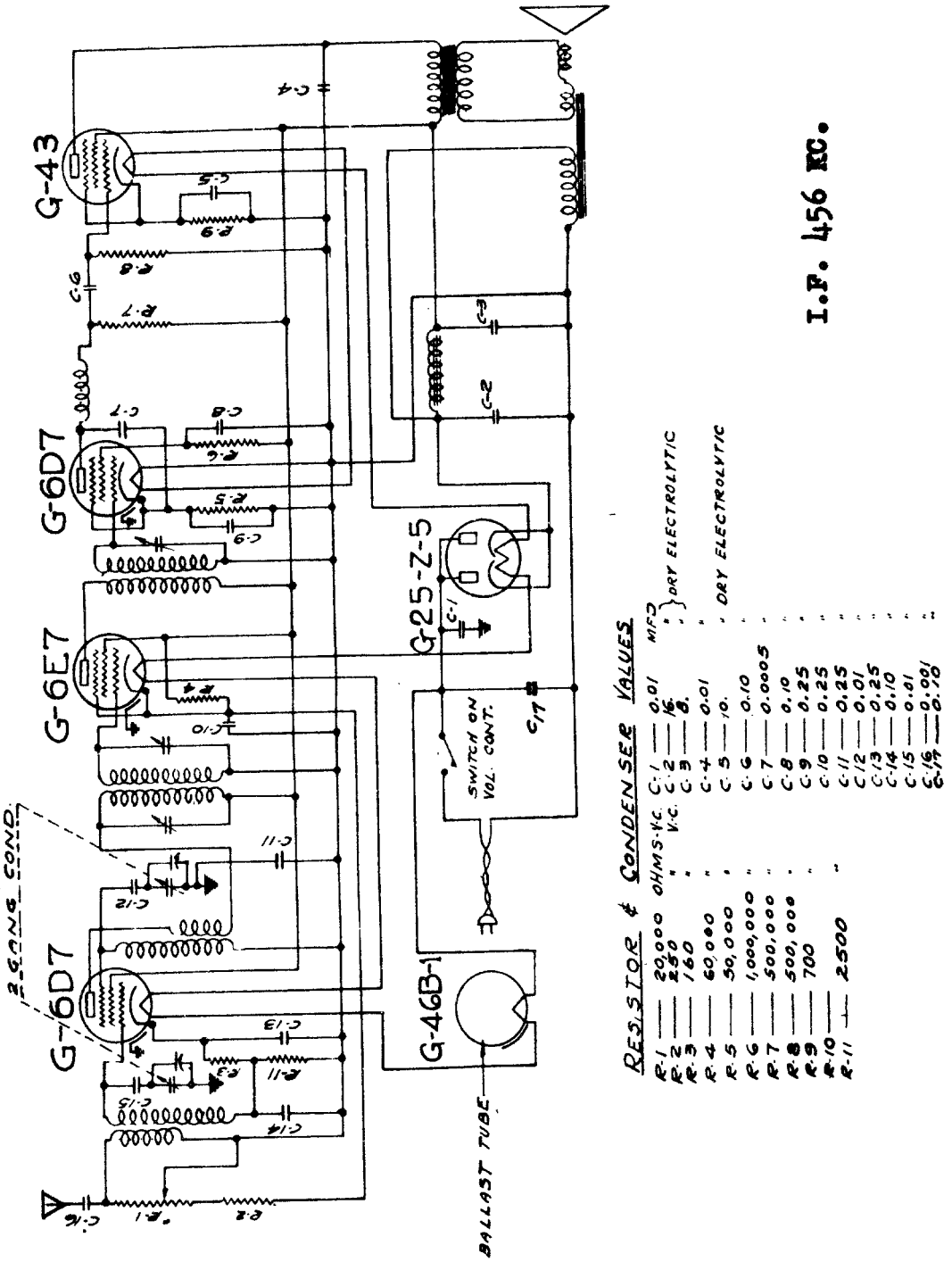

The circuit of the Model 400-A chassis is practically the same as that of the Model 400. The main differences being that the types G-6D7 and G-6E7 tubes are used in place of types G-57A-S and G-58A-S respectively; and that a type G-46A-1 tube is used as a ballast in place of the G-46B-1.

Resistors R-3 and R-11 have a value of 160 and 2500 ohms respectively in the Model 400-A chassis while they have a value of 250 and 200 ohms in the Model 400 chassis. Resistor R-10 is omitted entirely.

SCHEMATIC DIAGRAM OF MAJESTIC MODEL-460 RECEIVER

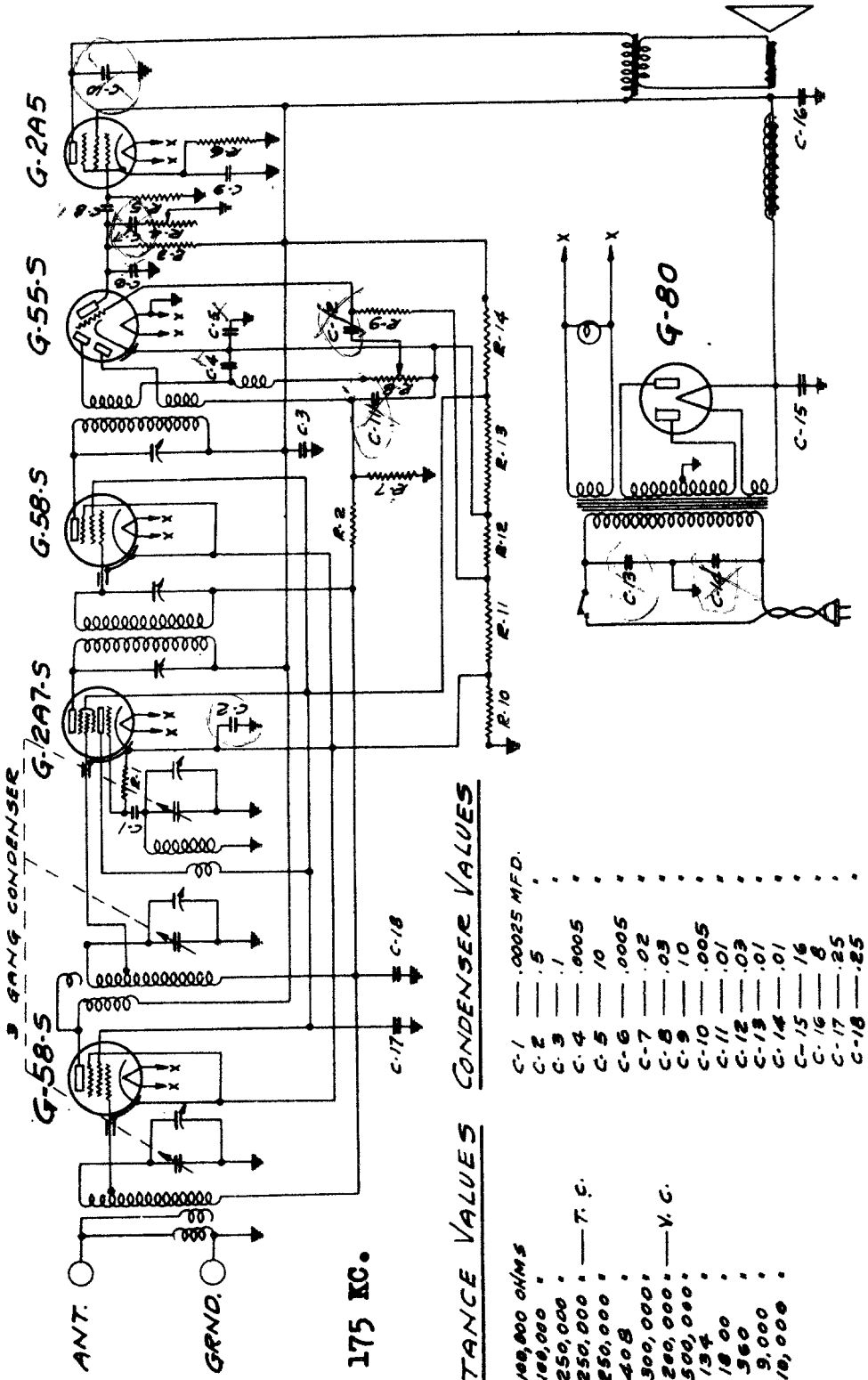

I.F. 175 KC.

RESISTANCE VALUES

R-1	100,000 OHMS	
R-2	100,000 "	
R-3	250,000 "	T. C.
R-4	250,000 "	
R-5	250,000 "	
R-6	408 "	
R-7	300,000 "	V. C.
R-8	200,000 "	
R-9	500,000 "	
R-10	134 "	
R-11	18.00 "	
R-12	360 "	
R-13	9,000 "	
R-14	10,000 "	

CONDENSER VALUES

C-1	.00025 MFD.
C-2	.5 "
C-3	.1 "
C-4	.0005 "
C-5	10 "
C-6	.0005 "
C-7	.02 "
C-8	.03 "
C-9	.10 "
C-10	.005 "
C-11	.01 "
C-12	.03 "
C-13	.01 "
C-14	.01 "
C-15	16 "
C-16	8 "
C-17	.25 "
C-18	.25 "

COMPILED BY M. N. BEITMAN, SUPREME PUBLICATIONS

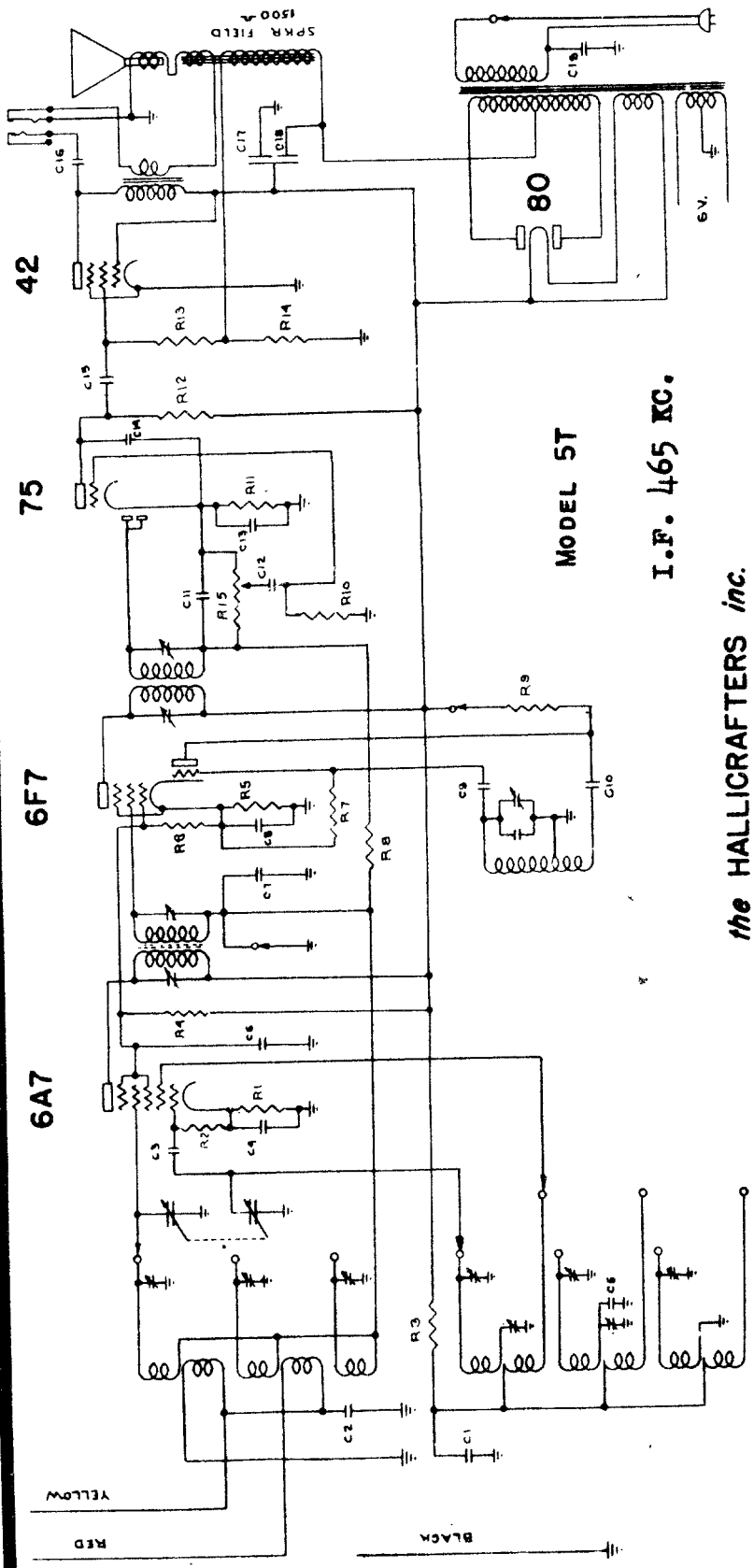

MODEL 5T

I.F. 465 KC.

the HALLICRAFTERS *inc.*

SKY BUDDY

C1	.1	400	C14	250 mmf	
C2	10 mmf		C15	.01	400
C3	100 mmf	200	C16	.05	400
C4	.1		C17	8.mfd	
C5	1000 mmf		C18	4.mfd	400
C6	.1	400	C19	.01	
C7	.05	200			
C8	.1	200			
C9	250	400			
C10	.01				
C11	250 mmf	400			
C12	.01	200			
C13	.1				

R1	250
R2	30,000
R3	25,000
R4	25,000
R5	200
R6	25,000
R7	100,000
R8	1 meg
R9	100,000
R10	1 meg
R11	4000
R12	250,000
R13	400,000
R14	250

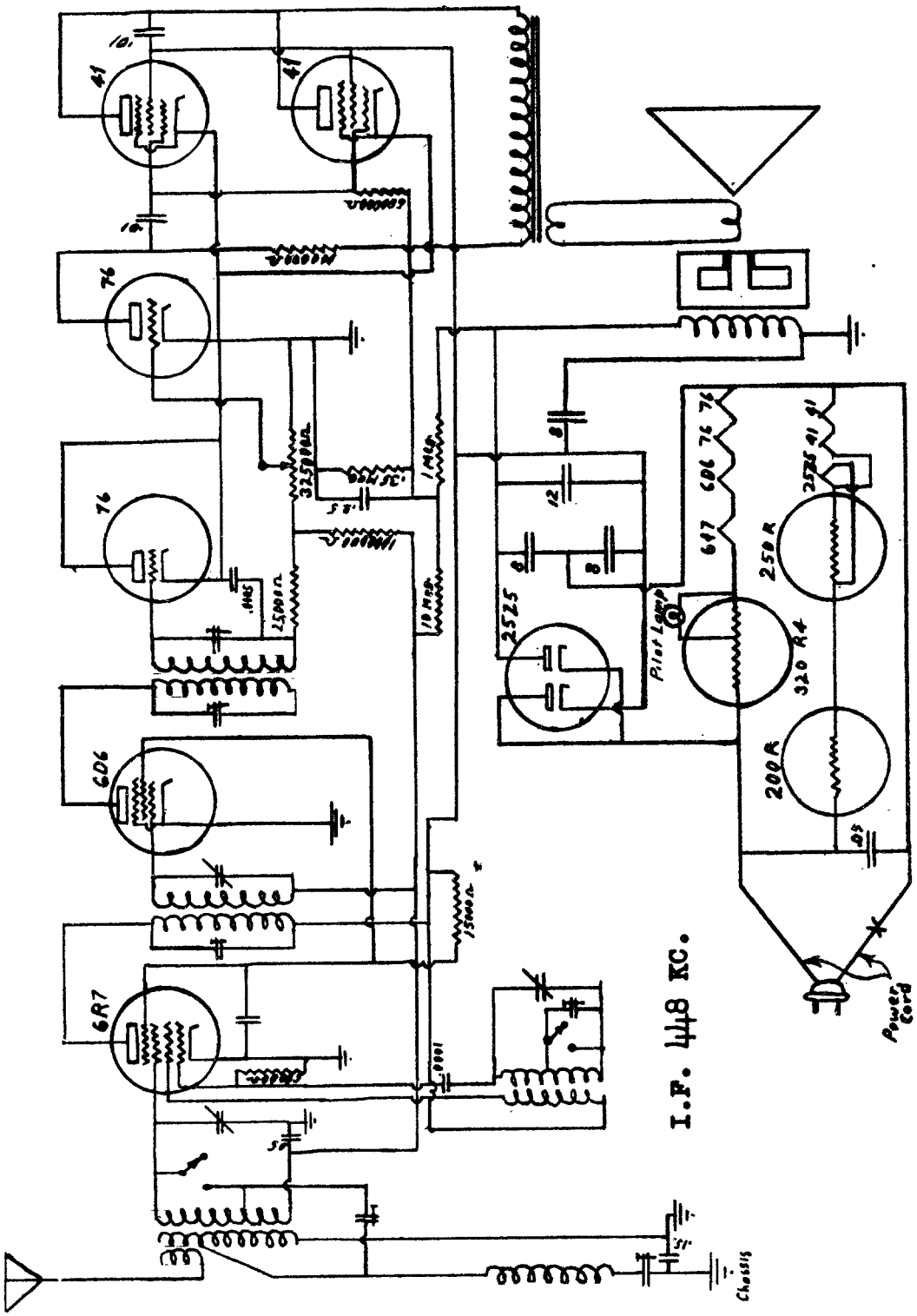

International Radio Corp.
Model 1019

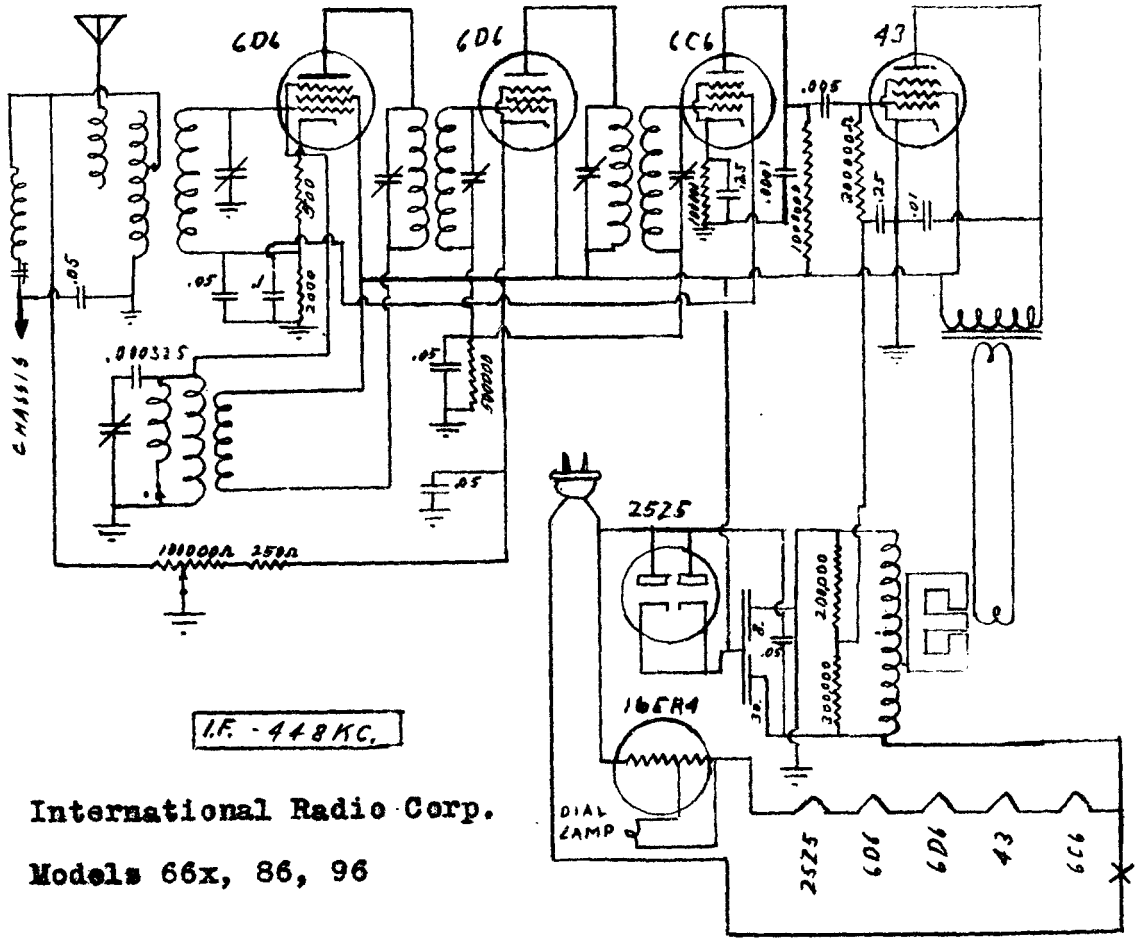

International Radio Corp.

Models 66x, 86, 96

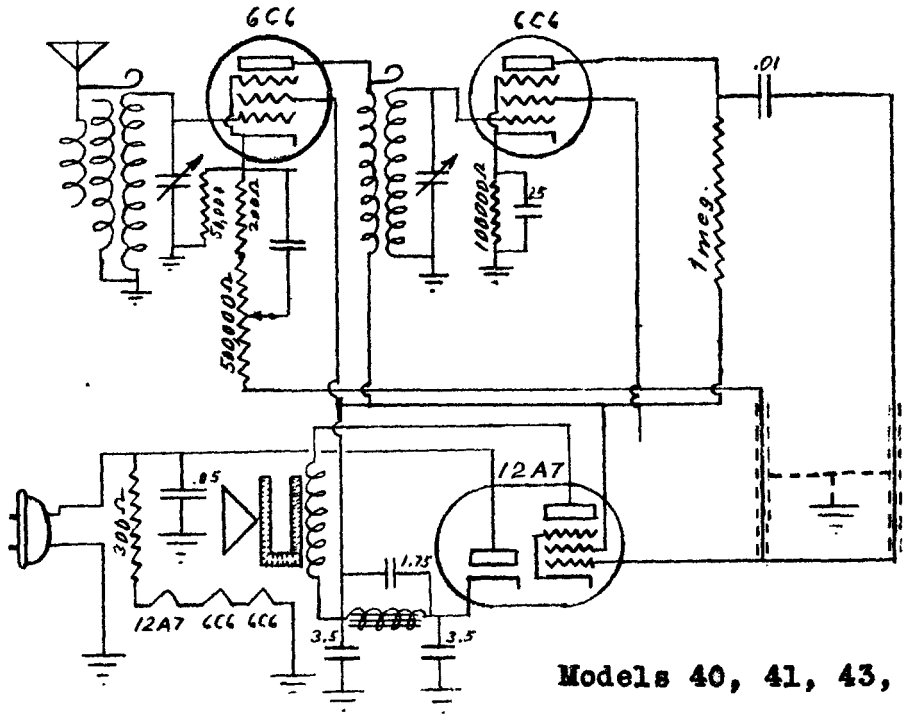

Models 40, 41, 43, 44

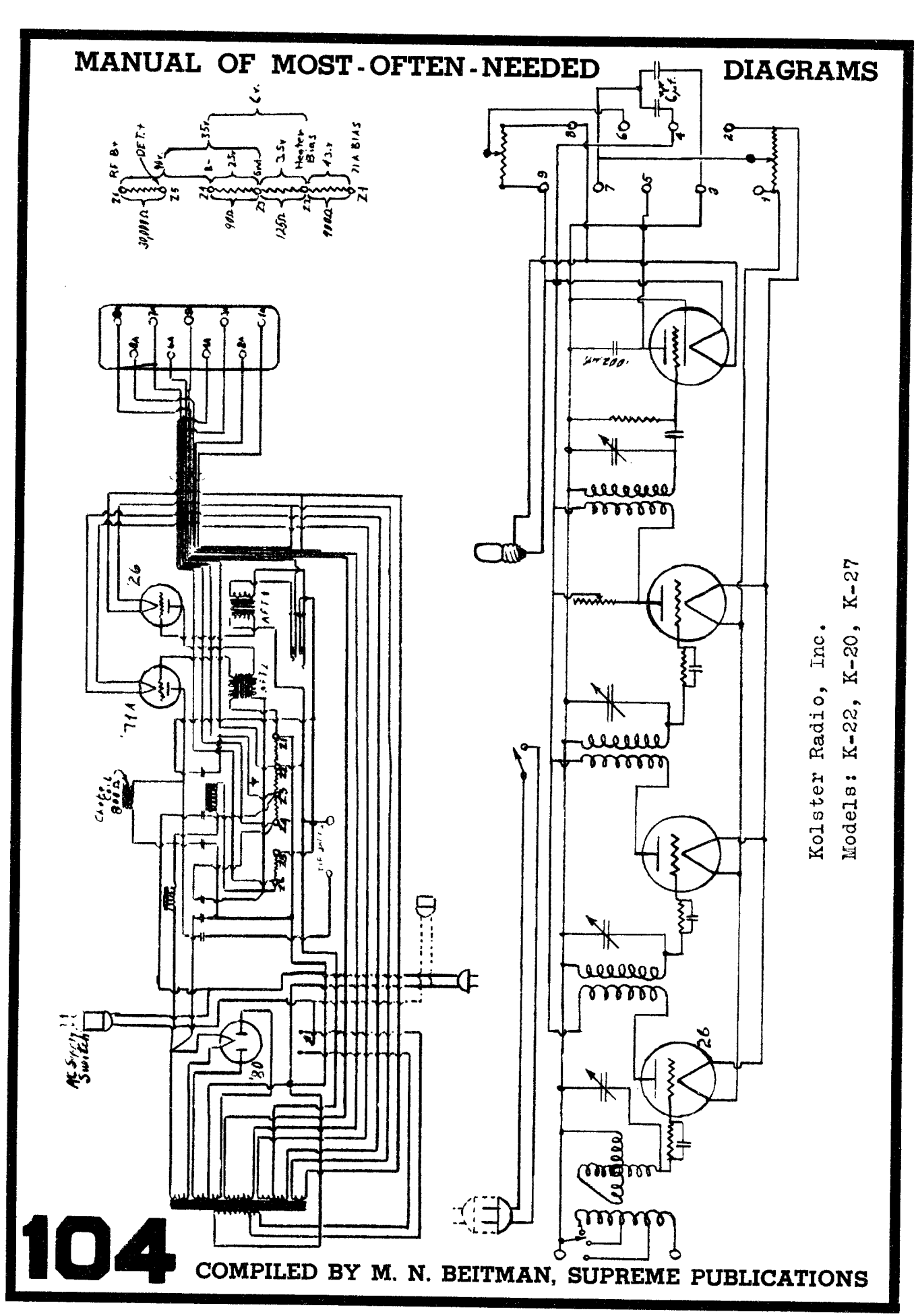
RF B+
DET.+
Wx
35v
B-
25v
Grid
35v
Heater Bias
45v
71A BIAS
Z1
Z2
Z3
Z4
Z5
Z6
Z7
Z8
Z9
Z10
Z11
Z12
30MΩ
90Ω
125Ω
1000Ω
26
71A
AFT
Cardiod Band
AC Switch
80
Kolster Radio, Inc.
Models: K-22, K-20, K-27

MANUAL OF MOST-OFTEN-NEEDED RADIO DIAGRAMS

☐ **PRACTICAL RADIO for War Training**

This new, 1943 manual will clarify the important radio facts, explain the principles which may have puzzled you, and point the way to faster radio repairing. You will find hundreds of practical hints for mounting parts, testing components, trouble-shooting, using instruments. Needed useful theory in each chapter is followed with practical applications. This is the book that will help you repair radios faster, or obtain a good radio War-job, or get ahead in the Armed Forces. Written by M. N. Beitman. 336 large pages, 6x9 inches. Printed on thick, enamel paper. Almost 300 illustrations and diagrams to help you. Seal leatherette cover. Price only..... **$2.95**

Supreme Publications

PUBLISHERS OF RADIO BOOKS, MANUALS, AND DIAGRAMS

328 South Jefferson Street — Chicago, Illinois

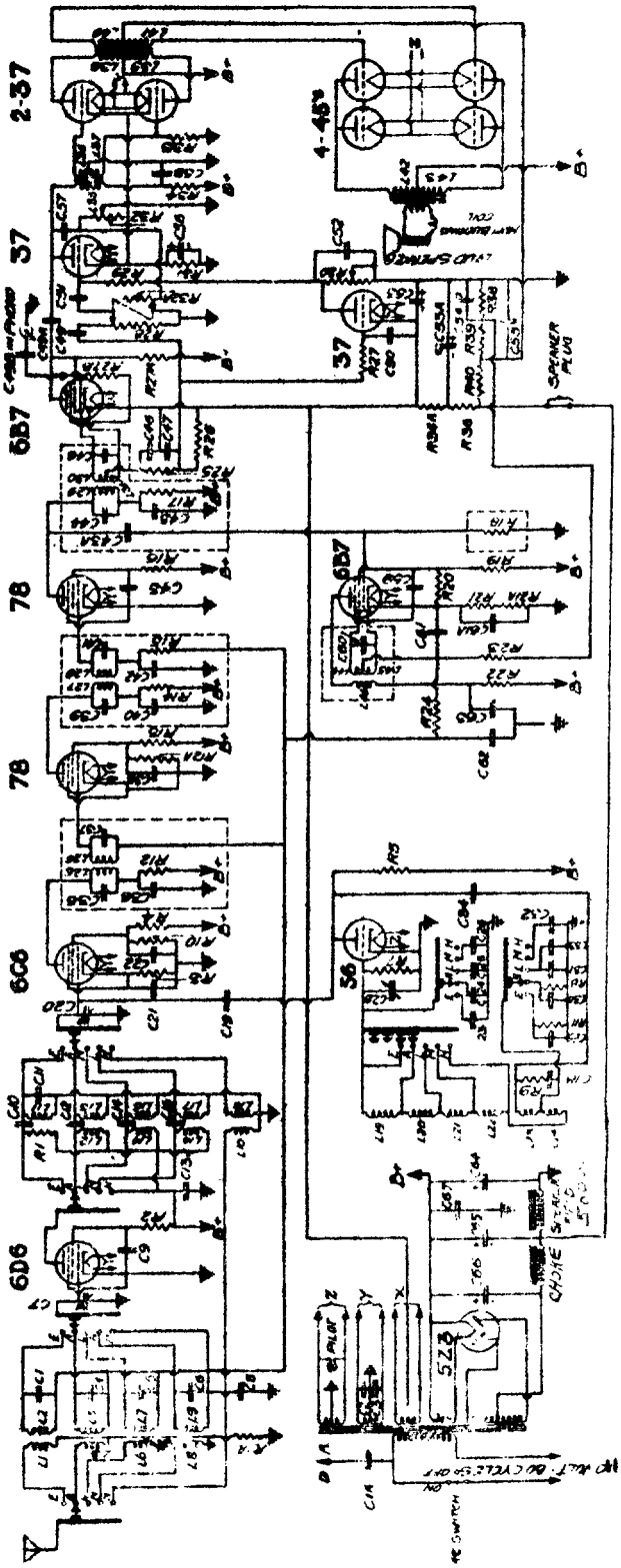

C1A	250 MMFD	MICA	
C1	80	"	TRIMMER
C2	.05	MFD	200 VOLT
C3	.05	"	200 "
C4	20	MMFD	TRIMMER
C5	20	"	"
C6	20	"	"
C7	365	"	TUNING CONDENSER
C8	.05	MFD	200 VOLT
C9	.05	"	400 "
C10	25	MMFD	MICA
C11	80	"	TRIMMER
C12	20	"	"
C13	.05	MFD	400 VOLT
C14	20	MMFD	TRIMMER
C15	20	"	"
C16	25	"	MICA
C19	20	"	TRIMMER
C20	365	"	TUNING CONDENSER
C21	.05	MFD	200 VOLT
C22	.05	"	200 "
C23	80	MMFD	TRIMMER
C24	20	"	"
C25	20	"	"
C26	20	"	"
C28	365	"	TUNING CONDENSER
C29	140	"	TRIMMER
C30	360	"	"
C31	700	"	"
C32	1000	"	MICA
C33	500	"	"
C34	2000	"	"
C35	I.F.T.		TRIMMER
C36	.05	MFD	400 VOLT
C37	I.F.T.		TRIMMER
C38	.05	MFD	400 VOLT
C39	I.F.T.		TRIMMER
C40	.05	MFD	400 VOLT
C41	I.F.T.		TRIMMER
C42	.05	MFD	200 VOLT
C43	.05	"	400 "
C43A	25	MMFD	MICA
C44	I.F.T.		TRIMMER
C45	.05	MFD	400 VOLT
C46	250	MMFD	MICA } DUAL
C47	250	"	MICA }
C48	I.F.T.		TRIMMER
C49	.05	MFD	200 VOLT
C49A	.05	"	400 "
C49B	.05	"	200 " IN PARALLEL
C50	.05	"	200 "
C51	.25	"	200 "
C52	.01	"	200 "
C53	25	"	50 "
C53A	10	"	35 "
C54	.05	"	200 "
C55	25	"	50 "
C56	12	"	25 "

C57	.05	"	400 "
C58	1	"	300 "
C59	.05	"	400 "
C60	I.F.T.		TRIMMER
C61	.001	MFD	600 VOLT
C61A	.05	"	200 "
C62	.001	"	600 "
C63	.05	"	400 "
C64	8	"	ELECTROLYTIC
C65	8	"	"
C66	8	"	"
C67	.25	"	400 VOLT

R1A	5 000	25	WATT
R1	15 000	.25	"
R2	200 000	.25	"
R3	5 000	.25	"
R4	50 000	.50	"
R5	15 000	1	"
R7	500 000	.25	"
R8	200 000	.25	"
R9	1 000	.25	"
R10	10 000	.25	"
R11	50 000	.25	"
R12	5 000	.25	"
R12A	100 000	.25	"
R13	200 000	.25	"
R14	5 000	.25	"
R15	3 MEG	.25	"
R16	200 000	.25	"
R17	5 000	.25	"
R18	3 MEG	.25	"
R19	25 000	.5	"
R20	50 000	.5	"
R21	4 000	.25	"
R21A	4 000	.25	"
R22	5 000	.25	"
R23	500 000	.25	"
R24	100 000	.25	"
R25	100 000	.25	"
R26	500 000	.25	"
R27	500 000	.25	"
R27A	500 000	.5	"
R27B	100 000	.25	"
R28	500 000		POT VOLUME CONTROL
R29	300 000	.25	WATT
R30	50 000		POT STAT-O-HOT CONTROL
R31	700		1" FLEXIBLE
R32	50 000		VARIABLE TONE CONTROL
R32A	50 000		INTIMATE TONE CONTROL
R33	10 000	.25	WATT
R34	15 000	1	"
R36	25 000	.25	"
R36A	25 000	.25	"
R38	10 000	.25	"
R38	100 000	.25	"
R40	50 000	.25	"

THE MIDWEST RADIO CORP.
909 BROADWAY CINCINNATI, OHIO.

SCHEMATIC CIRCUIT DIAGRAM OF THE MODEL 15-34 SET

I.F. 450 KC.

COMPILED BY M. N. BEITMAN, SUPREME PUBLICATIONS

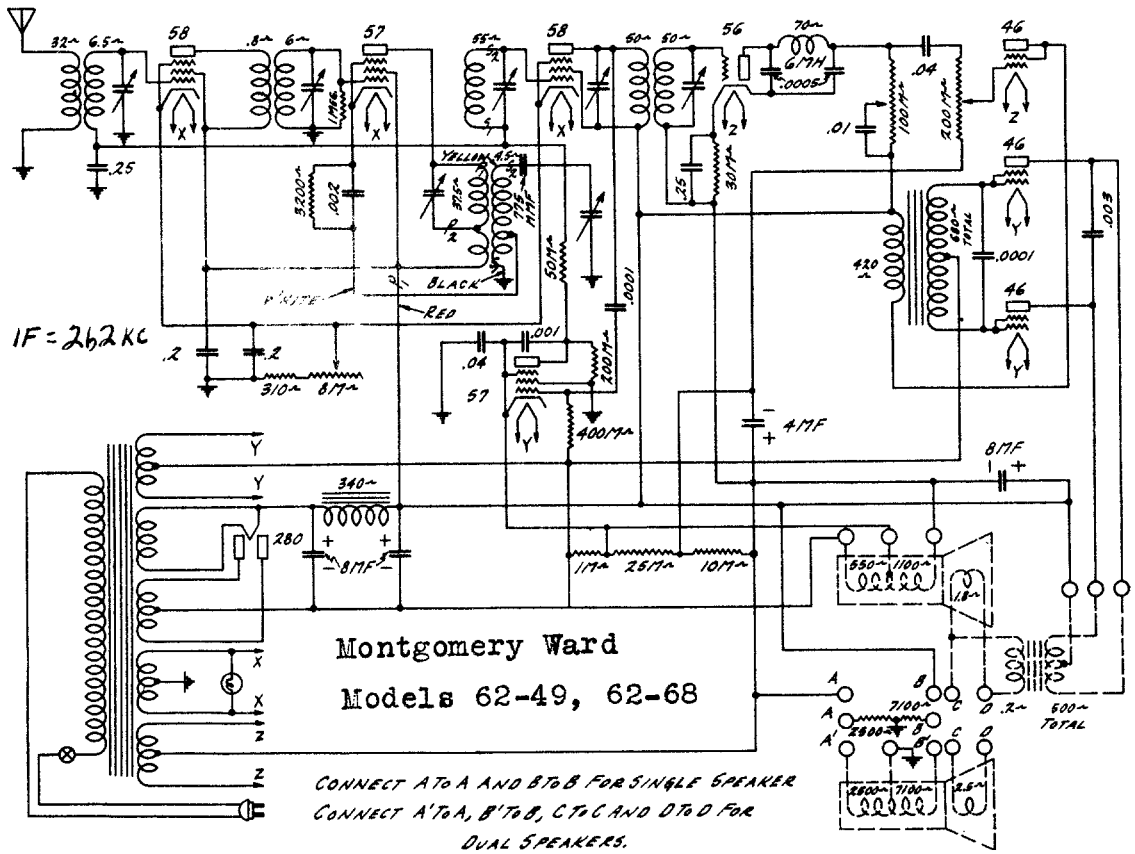

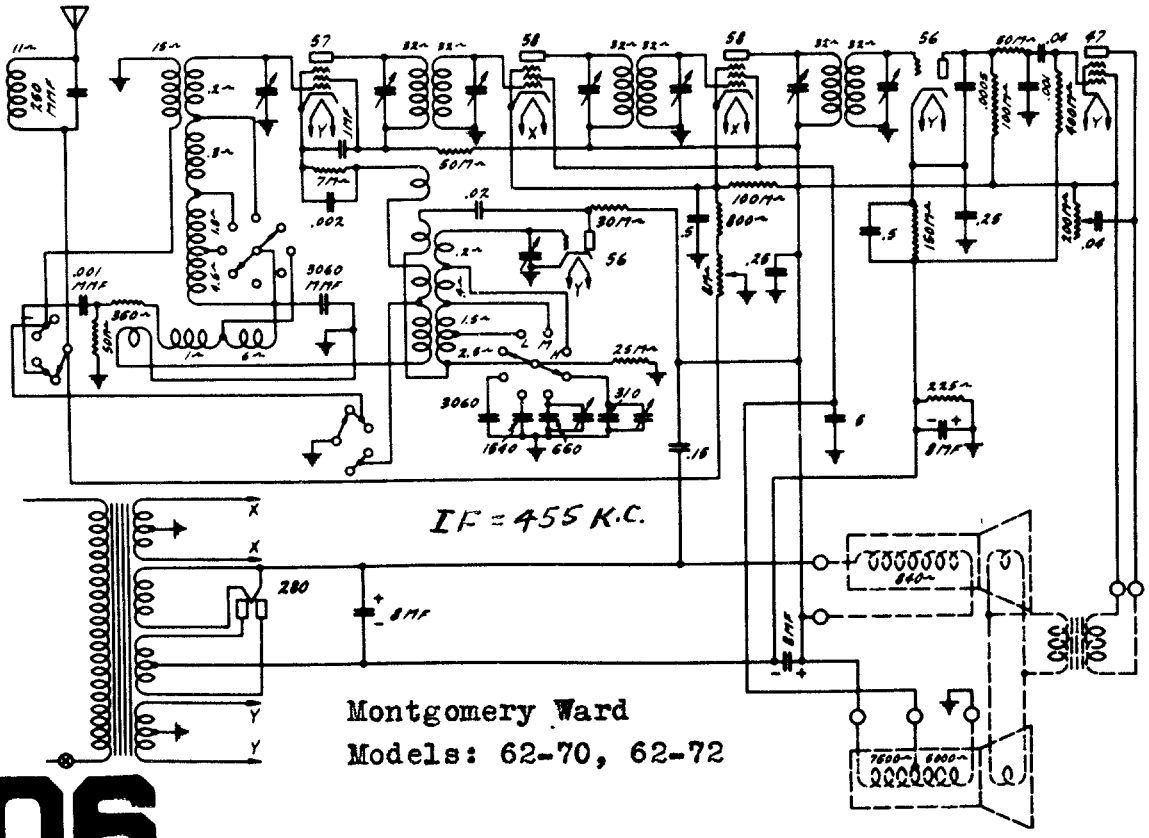

COMPILED BY M. N. BEITMAN, SUPREME PUBLICATIONS

MONTGOMERY WARD & CO.

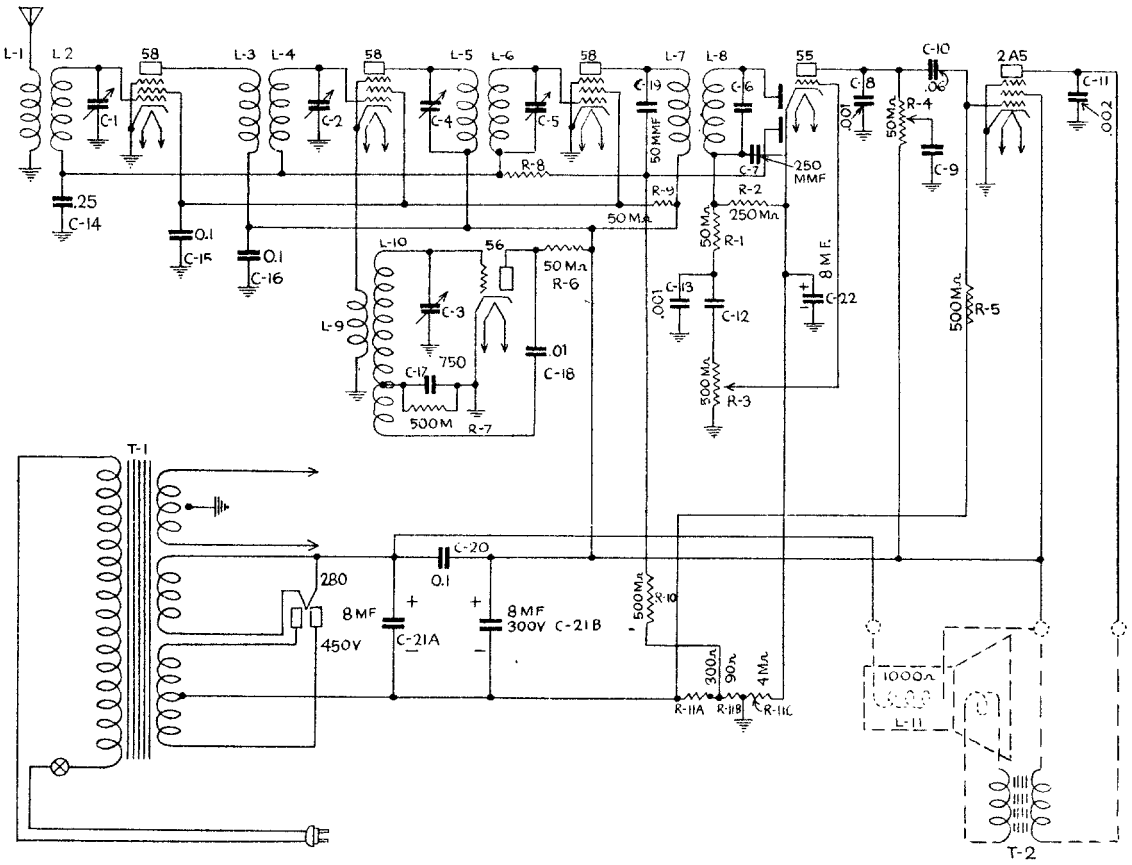

No. 62-99 AND 62-97

Circuit

The complete circuit consists of a type 58 tube functioning as an R. F. Amplifier, followed by another type 58 tube operating as a 1st detector, or mixer tube. A type 56 tube is used as an oscillator.

The I. F. amplifier utilizes a type 58 tube and is followed by the type 55 tube described above, functioning as a second detector, A. V. C. and first audio amplifier. A type 2A5 is used in the power audio stage.

The 58 R. F. Amplifier Tube is inductively coupled to the antenna by means of the antenna transformer, L-1, L-2, the secondary of which is tuned by one section of the three gang Tuning Condenser.

The second R. F. or first detector transformer provides inductive coupling between the plate circuit of the 58 R. F. Tube and grid circuit of the 58 1st Detector Tube. The secondary of this transformer is tuned by the second section of the three gang Tuning Condenser.

The stage of R. F. amplification consisting of the 58 R. F. Tube, together with its associated R. F. Transformers serves the double purpose of increasing the sensitivity and selectivity of the receiver as well as practically eliminating image or double frequency response.

Grid bias for the 58 R. F. Tube is variable and is controlled by the A. V. C. diode in accordance with the strength of the incoming signal.

A type 58 Tube is used as a first detector or mixer which is of the bias type. The grid bias of this tube is also controlled by the A. V. C.

The oscillator is of the tuned grid type and is tuned by the third section of the three gang Tuning Condenser.

The oscillator frequency is exactly 262 K. C. above the frequency of the received signal. To provide that the oscillator shall track accurately it is provided with a 675 Mmf. Series Padder Condenser, C-17, and also a shunt trimmer condenser which allows accurate alignment at high frequencies.

Voltages at Sockets

Line Voltage 115—Volume Control at Maximum

Type of Tube	Position of Tube	Function	"A" Volts	"B" Volts	Control Grid "C" Volts	Screen Grid Volts	Screen Current MA	Plate Current MA	Cathode Volts
56	1	Osc.	2.3	110	15-30(1)	.....	...	3-3.4(1)	0
58	2	R. F.	2.3	260	2.0(2)	90(3)	1.2	4.8	0
58	3	1st Det.	2.3	260	2.0(2)	90(3)	1.3	5.4	0
58	4	I. F.	2.3	260	2.0(2)	90(3)	1.2	4.6	0
55	5	2nd Det. AVC-1st Audio	2.3	Diode 1-0 Diode 2-3 Triode 135	2.0(5)	.....	...	4.6	12
2A5	6	Power	2.3	255	3.0(6)	260	....	.....	0
80	7	Rectifier	4.8	.....	.....	.....	..	26 Per Plate	..

(1)Varies with frequency approximately as shown.
(2)Voltage as read with 60,000 ohm meter—across 90 ohm section of R-11—50 volts.
(3)Voltage as read with 600,000 ohm meter.
(4)Not actual voltage due to resistance in circuit—tone voltage- -17 volts.
(5)Voltage as read with 60,000 ohm meter—across 4000 ohm section of R-11— 12 volts.
(6)Voltage as read with 60,000 ohm meter—across 300 and 90 ohm section of R-11 —22 volts.

MANUAL OF MOST-OFTEN-NEEDED RADIO DIAGRAMS

Montgomery Ward Models 62-185, 62-187, 62-190, 62-196

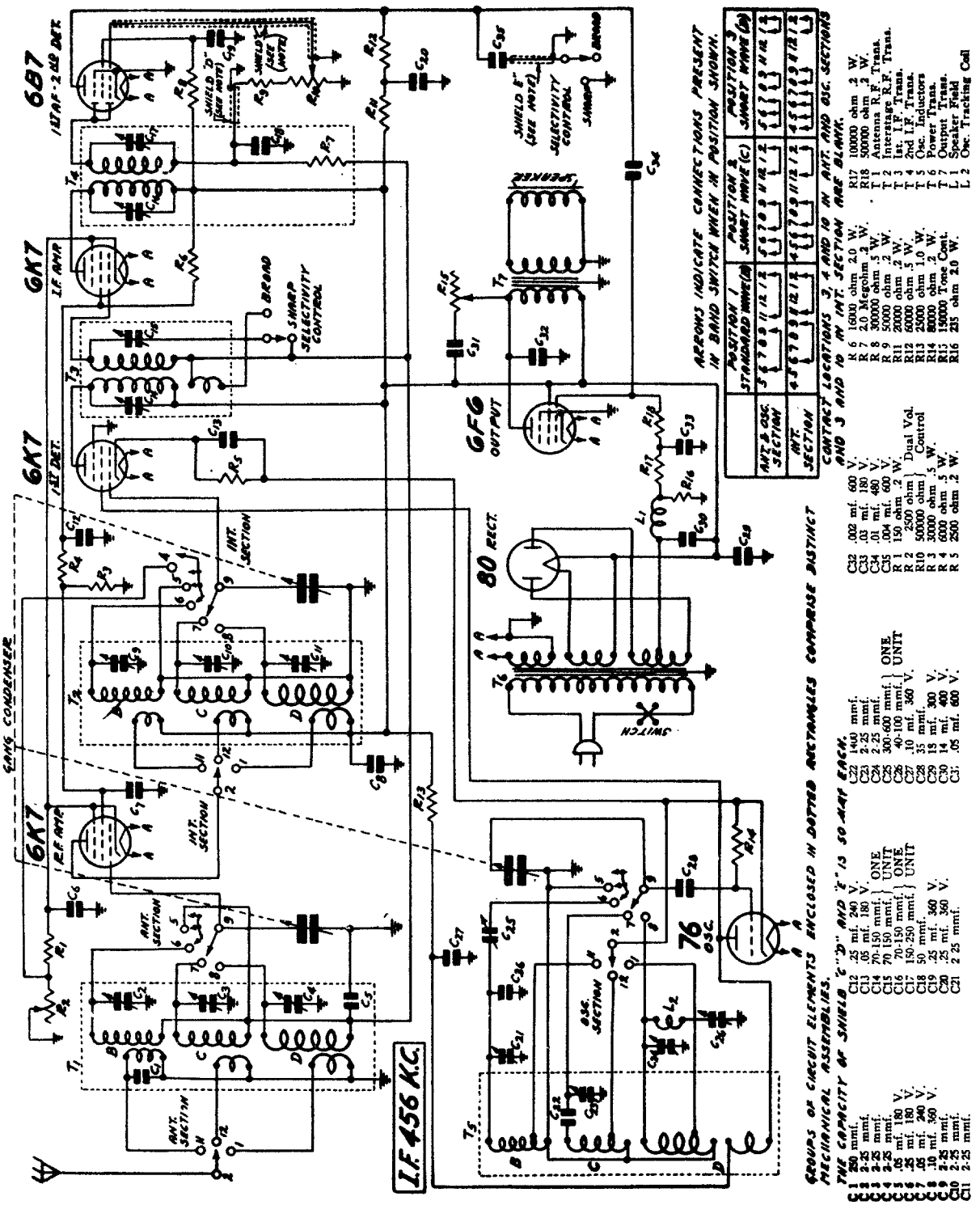

COMPILED BY M. N. BEITMAN, SUPREME PUBLICATIONS

Montgomery Ward Radio Model 62-233

DESCRIPTION

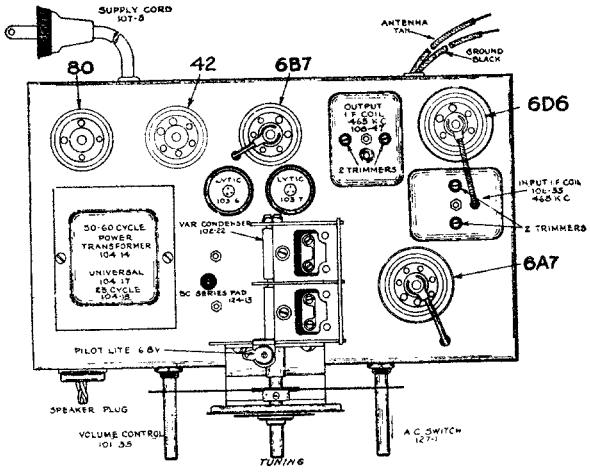

Tubes

The Tube complement of this chassis is as follows:

1 Type 6A7—pentagrid electron coupled oscillator and first detector.
1 Type 6D6—remote cut-off pentode as I.F. amplifier.
1 Type 6B7—duplex diode pentode as diode detector, A.V.C. and A.F.
1 Type 42—pentode output tube.
1 Type 80—high vacuum rectifier.

Voltages taken from different points of circuit to chassis are measured with volume control full on, all tubes in their sockets and speaker connected, with a volt meter having a resistance of 1000 ohms per volt. These voltages are clearly indicated on the circuit diagram

All voltages are measured with 119 volts on the primary of the power transformer.

Resistance of coils and transformer windings are indicated in ohms on schematic circuit diagram.

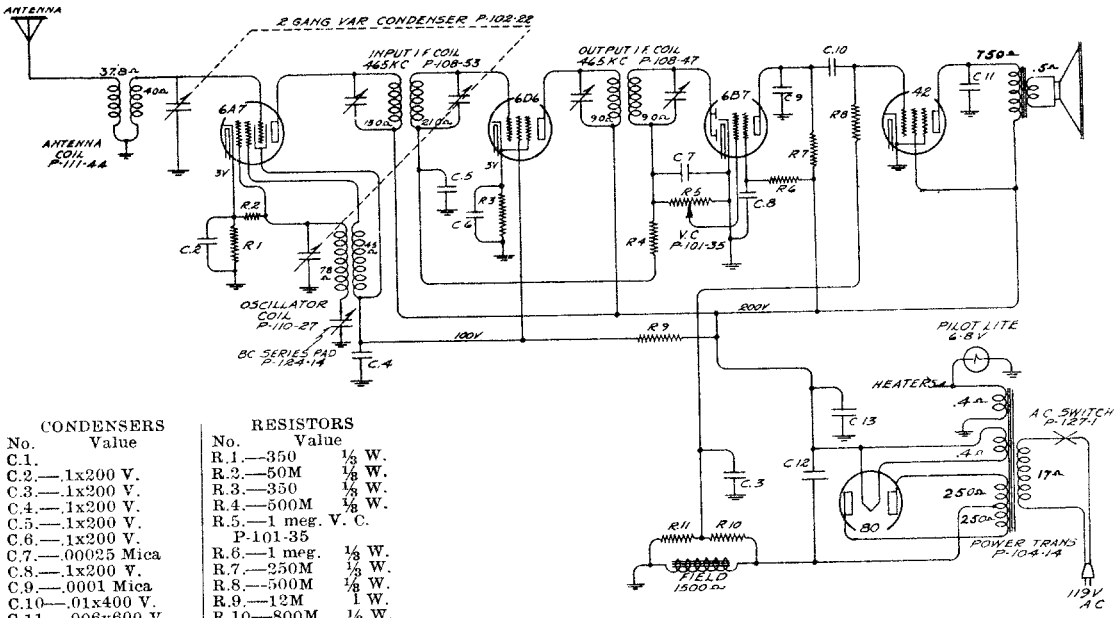

CONDENSERS No.	Value
C.1.	
C.2.	.1x200 V.
C.3.	.1x200 V.
C.4.	.1x200 V.
C.5.	.1x200 V.
C.6.	.1x200 V.
C.7.	.00025 Mica
C.8.	.1x200 V.
C.9.	.0001 Mica
C.10	.01x400 V.
C.11	.006x600 V.
C.12	8 mfd. lytic x 350 V.—P-103-6
C.13	8 mfd. lytic x 300 V.—P-103-7

RESISTORS No.	Value	
R.1.	350	⅓ W.
R.2.	50M	⅛ W.
R.3.	350	⅓ W.
R.4.	500M	⅛ W.
R.5.	1 meg. V. C. P-101-35	
R.6.	1 meg.	⅛ W.
R.7.	250M	⅓ W.
R.8.	500M	⅛ W.
R.9.	12M	1 W.
R.10	800M	⅓ W.
R.11	201M	⅓ W.

Service Notes

To check for open by-pass condensers, shunt each condenser with another of similar capacity and of the same voltage rating, which is known to be good, until the defective unit is located. Open by-pass condensers frequently cause oscillation and distorted tone. Defective and shorted electrolytic filter condensers cause excessive hum, motor-boating, low volume and a reduction in all D.C. voltages. Open or shorted electrolytic and by-pass condensers (across bias resistor of type 42 tube) will cause low volume and distorted tone.

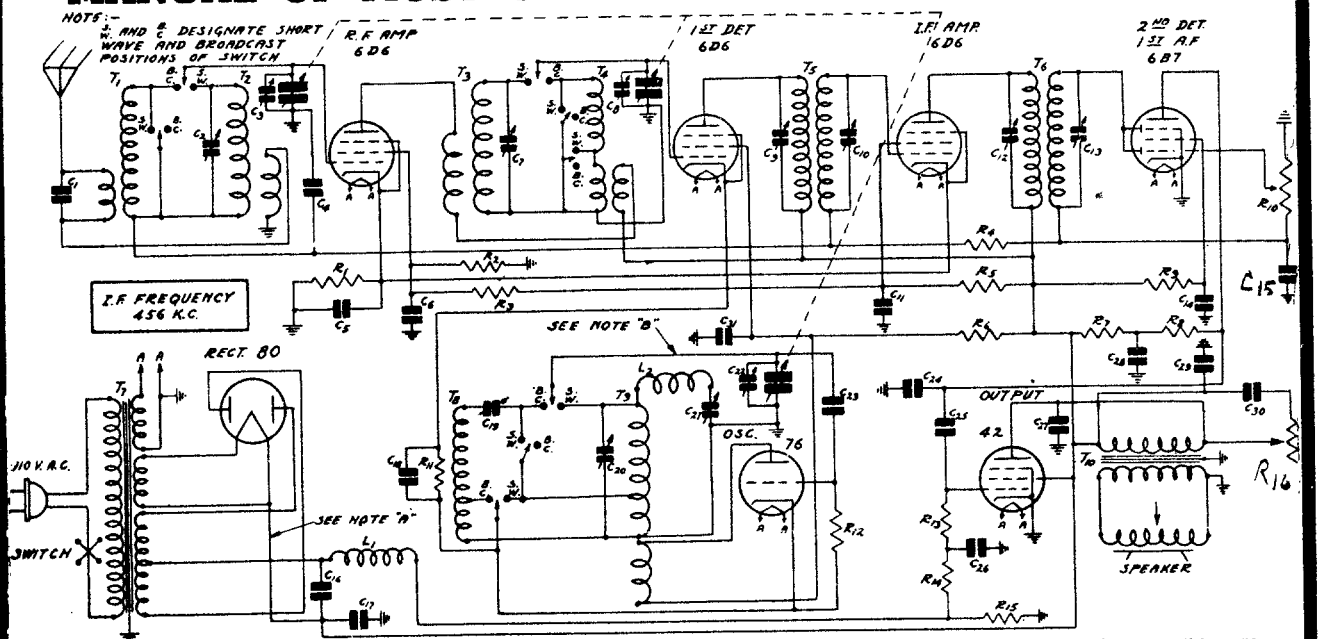

Montgomery Ward Models 62-123, 62-131, 62-133, 62-142, 62-144, 62-152,

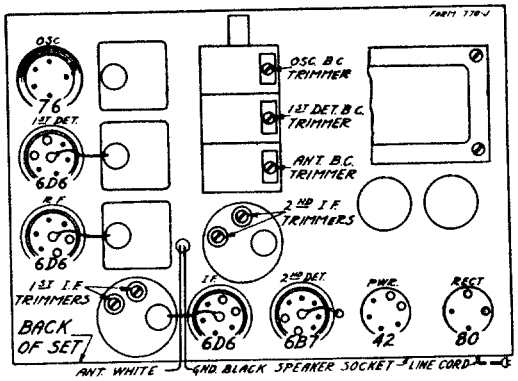

Voltages at Sockets

LINE VOLTAGE — 115

ANTENNA SHORTED TO GROUND

Type of Tube	Function	Across Fila. or Heater	Plate to Cath.	Screen to Cath.	Control Grid to Cath.	Normal Plate M. A.
6D6	R. F.	6.3	246	100	3.6(1)	5.3
6D6	1st Det.	6.6	237	97	8.0(2)	3.4
76	Osc.	6.3	115		0	4.8
6D6	I. F.	6.3	246	130	3.6(1)	8.3
6B7	2nd Det.	6.3	50(3)	40(3)	0	2.7
42	Power	6.3	230	245	17.0(4)	33.0
80	Rectifier	5.0				37.0 per plate

(1) Cathode to ground
(2) Subject to variation
(3) Read with 1,000,000 ohm meter
(4) As read across R15

Code	Capacity	Volts	Type
C1	.00025 mfd.		Moulded
C2	3-40 mmfd.		Ant. S. W. Trimmer
C3	(See 3 Gang Cond.)		Gang Trimmer
C4	.05 mfd.	200V.	Tubular
C5	.25 mfd.	200V.	Tubular
C6	.05 mfd.	400V.	Tubular
C7	3-40 mmfd.		1st Det. S. W. Trim
C8	(See 3 Gang Cond.)		Gang Trimmer
C9	90±30 mmfd.		Dual Trimmer Part of I. F. Assem.
C10	90±30 mmfd.		
C11	.25 mfd.	300V.	Tubular
C12	90±30 mmfd.		Dual Trimmer Part of I. F. Assem.
C13	90±30 mmfd.		
C14	.25 mfd.	400V.	Tubular
C15	.0001 mfd.		Moulded
C16	18.0 mfd.	300V.	Electrolytic Wet
C16	8.0 mfd.	450V.	Electrolytic Wet
C-17	8.0 mfd.	500V.	Electrolytic Wet
C17	14.0 mfd.	400V.	Electrolytic Wet
C18	.05 mfd.	200V.	Tubular
C19	300-500 mmfd.		600 K. C. Trimmer
C20	3-40 mmfd.		Osc. S. W. Trimmer
C21	70±30 mmfd.		6000 K. C. Trimmer
C22	(See 3 Gang Cond.)		Gang Trimmer
C23	.000035 mfd.		Moulded
C24	.002 mfd.	600V.	Tubular
C25	.01 mfd.	400V.	Tubular
C26	.03 mfd.	400V.	Tubular
C27	.002 mfd.	600V.	Tubular
C28	.25 mfd.	400V.	Tubular
C29	.1 mfd.	400V.	Tubular
C30	.05 mfd.	400V.	Tubular
C31	.1 mfd.	400V.	Tubular

Code	Resistance	Watts	Type
R1	200 ohm	.2	Flex. Wire Wound
R2	30,000 ohm	.5	Carbon
R3	6,000 ohm	.5	Carbon
R4	2.0 megohm	.2	Carbon
R5	16,000 ohm	1.5	Armored wire wound
R6	25,000 ohm	1.0	
R7	20,000 ohm	.2	Carbon
R8	60,000 ohm	.5	Carbon
R9	250,000 ohm	.5	Carbon
R10	500,000 ohm		Vol. Control & Switch
R11	2,500 ohm	.2	Carbon
R12	100,000 ohm	.2	Carbon
R13	500,000 ohm	.2	Carbon
R14	100,000 ohm	.2	Carbon
R15	235 ohm	2.0	Flex. Wire Wound
R16	150,000 ohm		Tone Control

WARDS AIRLINE RADIO

MODELS 62-425 and 62-265

The tube complement of this chassis is as follows:

1 Type 6A7—pentagrid oscillator and first detector.
1 Type 78 —remote cut-off pentode as I.F. amplifier.
1 Type 75 —duplex diode triode as diode detector, A.V.C. and A.F.
1 Type 41—pentode output tube.
1 Type 5Z4 or 5Y3—high vacuum rectifier.

ALIGNING INSTRUCTIONS:

CAUTION:—No aligning adjustments should be attempted without first thoroughly checking over all other possible causes of trouble, such as poor installations, open or grounded antenna systems, low line voltages, defective tubes, condensers and resistors. In order to properly align this chassis, an oscillator (generator) is absolutely necessary. No aligning adjustments should be attempted with the chassis in the cabinet. Remove the knobs and the two bolts which are used to fasten the chassis.

All adjustments should be made with a non-metallic screw driver.

RESONANCE INDICATOR:

Use as a resonance indicator an ontput meter connected across the primary of the speaker inpnt transformer, or by means of an adapter between the plate and screen terminals of the type 41 output tube. Use only enough signal to get a readily readable ontput. A low range output meter or the low scale of a multi-range voltmeter should be used.

ALIGNING I. F. TRANSFORMERS: (465 K. C.)

Connect external oscillator which has been adjusted to 465 kilocycles in series with .1 mfd. condenser, to the control grid cap of the type 6A7 tube. Ground the chassis to the oscillator. Adjust output I.F. transformer (No. 108-83) and input I.F. transformer (No. 108-82) to resonance. See label on bottom of cabinet for location of these transformers.

R. F. ALIGNMENT: (535-1720 K. C.)

1. With gang condenser in its minimum capacity position, plates entirely out of mesh, connect an external oscillator in series with a 200 mmf. condenser to tan antenna and black ground leads and make the following adjustments:
   (a) With external oscillator set at 1720 kilocycles, adjust oscillator trimmer (rear of gang condenser).
   (b) Re-set external oscillator to 1400 kilocycles, rotate condenser, pick up oscillator signal and adjust antenna trimmer to resonance (front section of gang condenser).
   (c) Check sensitivity at 600 and 1000 kilocycles.

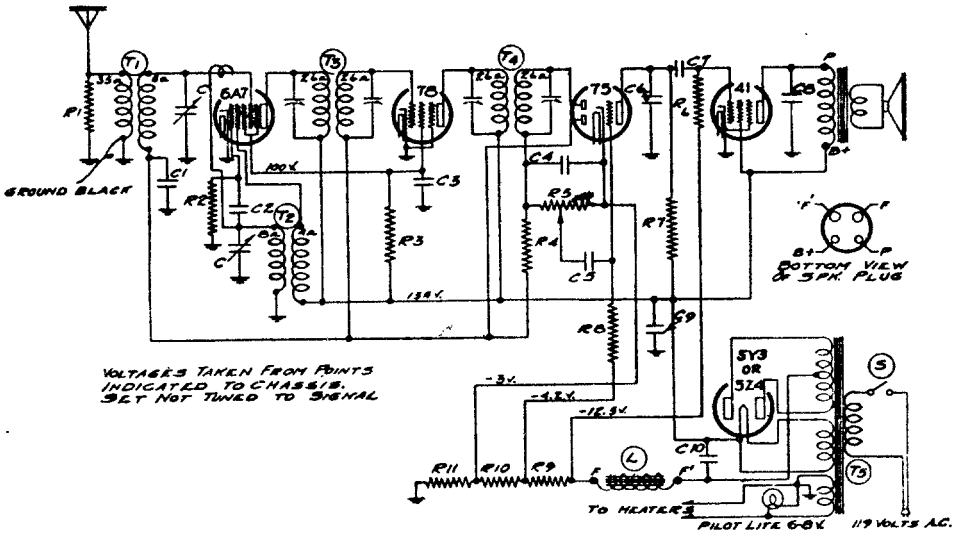

CONDENSERS

Part No.	Schematic Reference	Description	No. Used In Set
BE 100-11	C-5:C-7	.01 x 400 Volt Tubular	2
BE 100-19	C-8	.006 x 600 Volt Tubular	1
BE 100-1	C-3	.1 x 400 Volt Tubular	1
BE 100-22	C-1	.05 x 200 Volt Tubular	1
BE 119-24	C-9:C-10	Dual 5 mfd. x 200 Volt Electrolytic	1
BE 129-5	C-6	.0001 Mica—Type MT—20%	1
BE 129-12	C-2:C-4	.00025 Mica—Type MT—20%	2

RESISTORS

BE 106-29	R-9:R-10 R-11	(R9, 200 ohm): (R10, 33 ohm): (R11, 100 ohm) Metal clad resistor	1
BE 130-17	R-1	10M Ohm-1/3 Watt-20%-20 V.Carbon	1
BE 130-109	R-3	7500 Ohm-½ Watt-20%-10 V. Carbon	1
BE 130-117	R-2	50M Ohm-1/10 Watt-20%-50 V.Carbon	1
BE 130-118	R-6	600M Ohm-1/3 Watt-20%-100 V.Carbon	1
BE 130-121	R-4:R-8	3.2 Meg Ohm-1/3 Watt-30%-100 V.Carbon	2
BE 130-122	R-7	210M Ohm-1/10 Watt-30%-20%-50 V. Carbon	1

COILS

BE 108-82	T3	Input I.F. Coil Assem. Comp. with Can.	1
BE-108-83	T4	Output I.F. Coil Assem. Comp. with Can.	1
BE 110-46	T2	Oscillator Coil Assembly Complete	1
BE 111-58	T1	Antenna Coil Assembly Complete	1

SOCKETS

BE 121-6	Six Prong Socket—Marked "41"	1
BE 121-6	Six Prong Socket—Marked "75"	1
BE 121-6	Six Prong Socket—Marked "78"	1
BE 121-7	Seven Prong Socket—Marked "6A7"	1
BE-121-9	Four Prong Socket—Marked "SPKR"	1
BE 121-16	Five Prong Socket—Marked "5Z4"(Octal)	1

MISCELLANEOUS

Part No.	Schematic Reference	Description	No. Used In Set
BE 101-54	R-5	Volume Control and Switch (1 meg ohm)	1
BE 102-33	C	Two Gang Variable Condenser	1
BE 107-39		Line Cord & Plug	1
BE 128-8		Ivory Bakelite Knob (Model 62-265)	2
BE 131-2		Brown Bakelite Knob	1
BE 131-8		Spring for above knob	2

DIAL PARTS LIST

BE 107-28	Pilot Light Socket	1
BE 112-15	Dial Crystal only—less escutcheon	1
BE 112-160	Dial Pointer Complete with screw	1
BE 112-164	Brown Bakelite Escutcheon complete with crystal	1
BE 112-226	Ivory Bakelite Escutcheon complete with glass (Model 62-265)	1
BE 112-167A	Dial Scale	1
BE 116-13	6-8 Volt, T-51 Pilot Light Bulb	1
BE 117-59	Pointer Bushing Stud	1
BE 117-60	Pointer Bushing Assembly	1
BE 117-61	Drive Pulley	1
BE 117-68	Dial Bracket	1
BE 120-7A	Take-up Spring	1
BE 131-52	Drive Belt	1
BE 134-9	Horse Shoe Washer	1

MANUAL OF MOST-OFTEN-NEEDED RADIO DIAGRAMS

ARVIN RADIO CHASSIS RE29 AND RE35 — MODEL NUMBERS 58, 58A AND 88

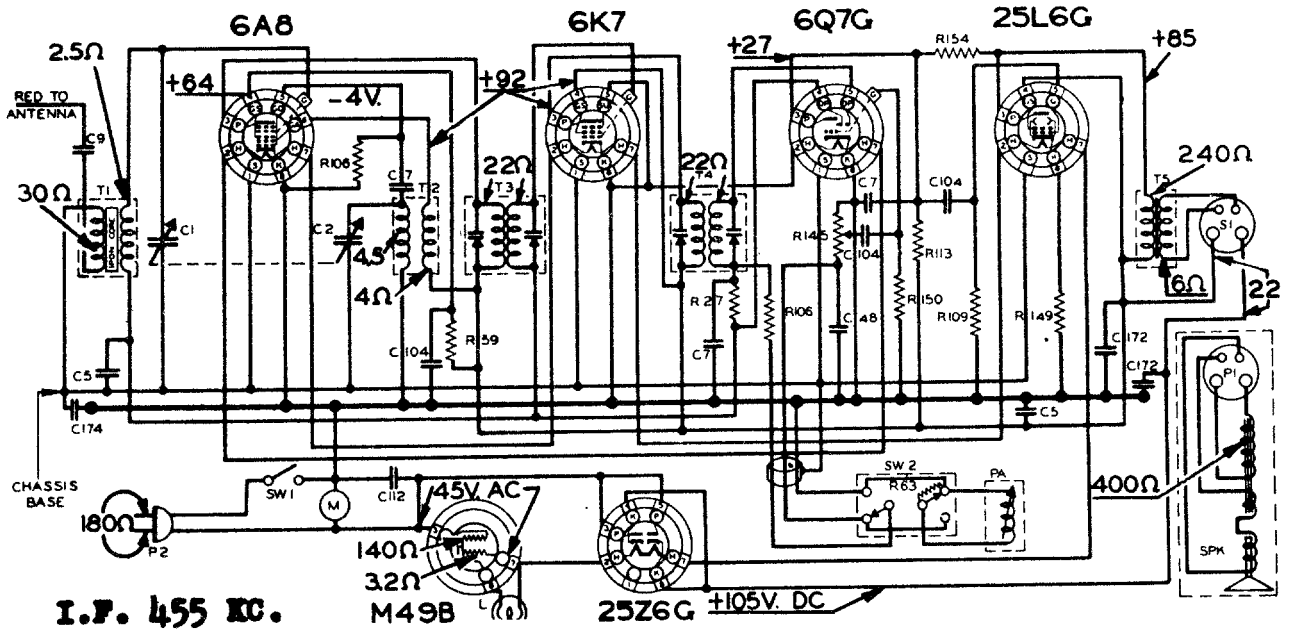

RESISTORS

Ref. No.	Part No.	Description
R59	17-4191	15,000 ohms ½ watt
R27	17-4788	2,000,000 ohms ½ watt
R106	17-14171	50,000 ohms ½ watt
R109	17-14174	500,000 ohms ½ watt
R-113	17-14178	250,000 ohms ½ watt
R149	17-14241	150 ohms ½ watt
R150	17-14242	5,000,000 ohms ½ watt
R154	17-14244	1,500,000 ohms ½ watt

CONDENSERS

Ref. No.	Part No.	Description
C7	17-2064	.0001 mfd. 600 volt
C104	17-4206	.01 mfd. 200 volt
C48	17-4207	.00025 mfd. 600 volt
C9	17-4292	.001 mfd. 600 volt
C5	17-14015	.05 mfd. 200 volt
C112	17-14139	.05 mfd. 400 volt
C172 A & B	17-14239	20-20 mfd. 150 volt
C174	17-14248	.2 mfd 400 volt
C1-C2	17-15900	Tuning Condenser

COILS and TRANSFORMERS

Ref. No.	Part No.	Description
T2	00-15979	Oscillator Coil
T-5	00-15980	Output Transformer
T3	00-16060	1st I.F. Transformer
T4	00-16061	2nd I.F. Transformer
T1	00-16083	Antenna Coil

SPEAKERS, DIAL PARTS, CABINETS & MISCELLANEOUS

Part No.	Description
10-5181	Chassis Mounting Screw per doz.
28-5188	Dial drive pulley (rubber)
83-2357	Grille cloth (ivory rayon)
29-13470	Tuning shaft retaining washer
29-13583	Dial drive cord (16" long)
34-13360	Dial drive takeup spring
17-14997	Needle cup
17-14998	Needle cup cover
19-15476	Tuning condenser drive pulley
17-15791E	Line cord and plug
29-15905	Cabinet (58A- Ivory)
32-15907	Chassis bottom cover
29-15909	Cabinet (58-Black)
32-15915	Tuning shaft bracket
29-15916	Cabinet back cover
17-15926A	Volume control switch
29-15929	Knob (wood-walnut finish)
29-15937	Knob (walnut bakelite)
23-15958	Tuning Shaft
17-15973	Dial light socket and clip
81-15974	Dial glass (black background)
17-15983	Speaker (5" diameter)
17-15989	Speaker (6" diameter)
81-16015	Dial glass (brown background)
27-16020	Cabinet (Model 88)
17-16021	Phono pickup and arm
17-16022	Phono turntable and motor
29-16024	Knob (ivory bakelite)
17-16065	Radio-Phono switch
29-16068	Knob (Radio-Phono switch)

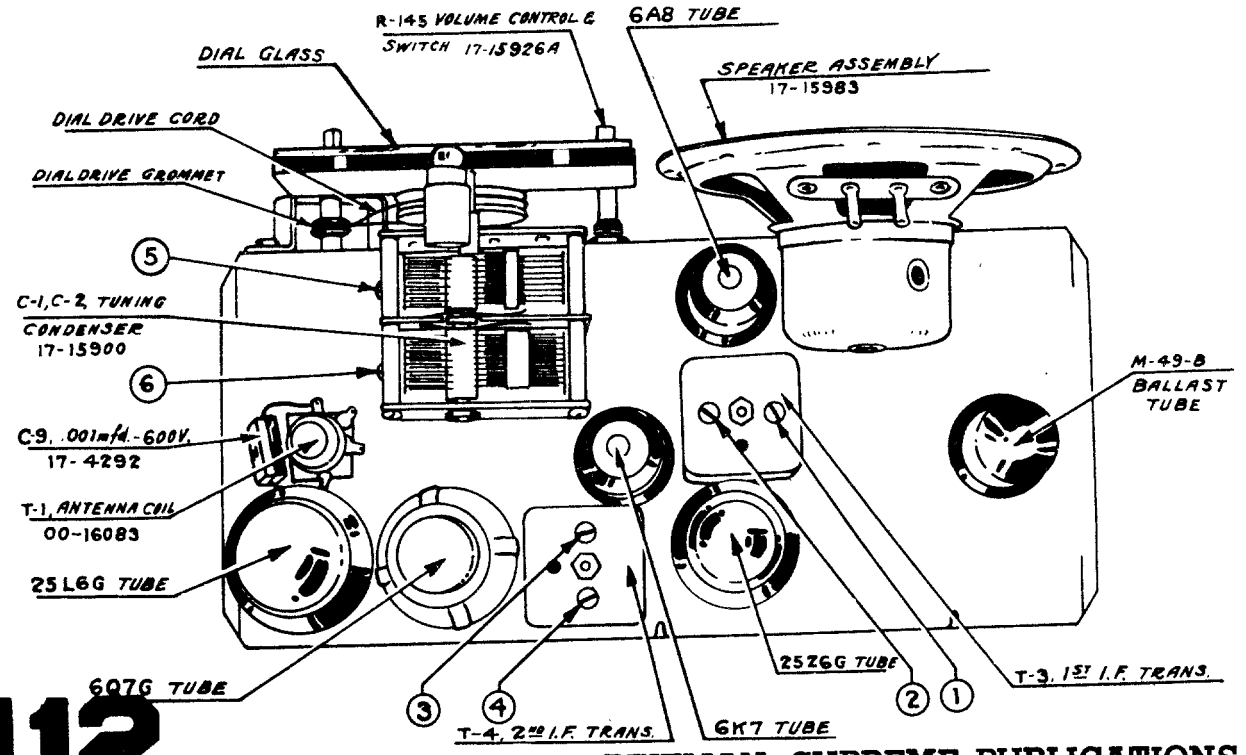

COMPILED BY M. N. BEITMAN, SUPREME PUBLICATIONS

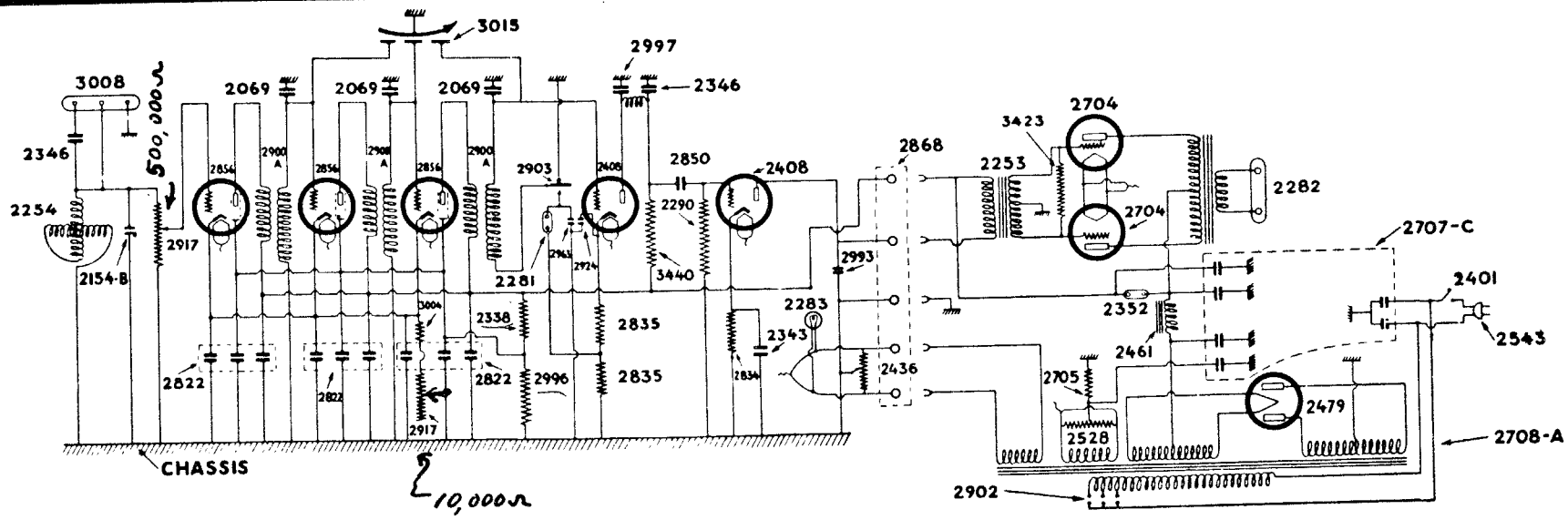

FIXED CONDENSERS

The fixed condensers used in Series 50 Receivers are listed below:

Part Number	Capacity, mfd.	Function
2346	.0001	Antenna series and detector plate by-pass.
2822	three 0.5 in one can	Screen grid, plate and cathode by-pass.
2924	1.0	Detector bias resistor by-pass.
2850	.01	AF coupling condenser.
2343	2.0	AF bias resistor by-pass.
2963	.002	Phonograph pick-up by-pass.
2993	.004	Audio by-pass.
2997	.0005	RF filter condenser.

National Carbon Co.
Models 50, 52, 53, 54

FIXED RESISTORS

Part Number	Resistance
2290	2 megohm
2835	4000 ohms
3440	125000 ohms
3004	200 ohms
2834	3000 ohms
2338	2500 ohms
2996	2250 ohms

VOLUME CONTROL: 500,000 Ω AND 10,000Ω

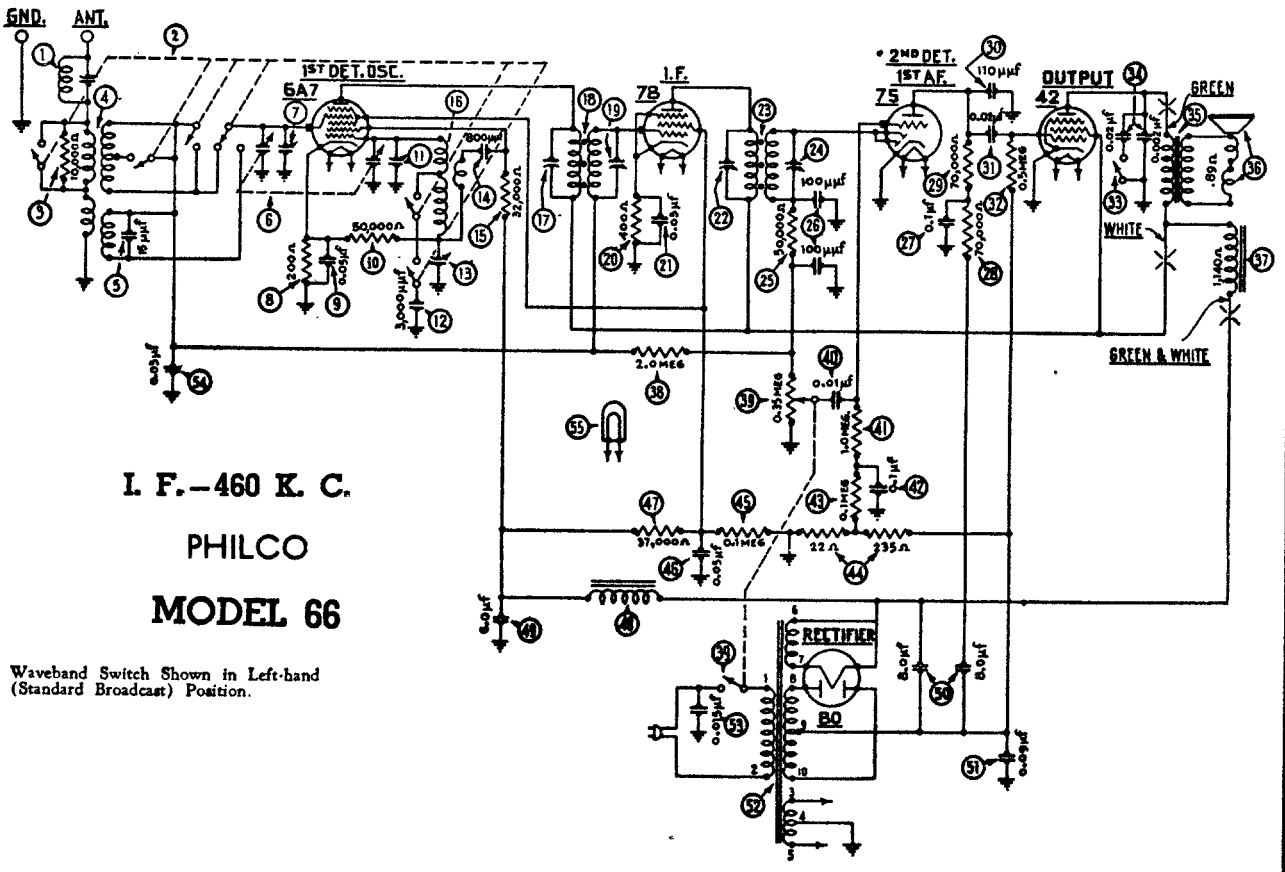

I. F.—460 K. C.

PHILCO

MODEL 66

Waveband Switch Shown in Left-hand (Standard Broadcast) Position.

No. on Figs.	Description	Part No.
1	Wave Trap	38-5199
2	Wave-band Switch	42-1066
3	Resistor (10,000 ohms) (Brown-Black-Orange)	33-1000
4	Antenna Transformer	32-1412
5	Condenser (.000015 Mfd.)	30-1030
6	Tuning Condenser Assembly	31-1231
7	Compensating Condenser (ANT)	Part of 6
8	Resistor (200 ohms Flexible) (Red-Black-Brown)	7217
9	Condenser (.05 Mfd. Tubular)	30-4020
10	Resistor (50,000 ohms) (Green-Green-Orange)	6098
11	Compensating Condenser (OSC. HF)	Part of 6
12	Condenser (.003 Mfd. Mica)	30-1028
13	Compensating Condenser (Osc. I. F.)	04000-S
14	Condenser (.0008 Mfd. Mica)	5378
15	Resistor (32,000 ohms) (Orange-Red-Orange)	5279
16	Oscillator Transformer	32-1413
17	Compensating Condenser (1st I. F. Pri.)	04000M
18	1st I. F. Transformer	32-1414
19	Compensating Condenser (1st I. F. Secondary)	04000M
20	Resistor (400 ohms Flexible)	33-3016
21	Condenser (.05 Mfd. Tubular)	30-4020
22	Compensating Condenser (2d I. F. Primary)	04000M
23	2d I. F Transformer	32-1415
24	Compensating Condenser (2d I. F. Secondary)	04000J
25	Resistor (50,000 ohms) (Green-Brown-Orange)	6098
26	Condenser (.0001 Mfd. Twin Bakelite Block)	8035-B
27	Condenser (.1 Mfd. Tubular)	30-4170
28	Resistor (70,000 ohms) (Violet-Black-Orange)	33-1115
29	Resistor (70 000 ohms) (Violet-Black-Orange)	33-1115
30	Condenser (.00011 Mfd. Mica)	30-1006
31	Condenser (.02 Mfd. Tubular)	30-4113
32	Resistor (500,000 ohms) (Yellow-White-Yellow)	6097
33	Tone Control	30-4192
34	Condensers in Tone Control	Inside 33

No. on Figs.	Description	Part No.
35	Output Transformer	32-7019
36	Voice Coil & Cone Assembly (S-12)	36-3014
37	Field Coil and Pot. Assembly (S-12)	36-3341
38	Resistor (2 Megohms) (Red-Black-Green)	33-1025
39	Volume Control and On-Off Switch	33-5006
40	Condenser (.01 Mfd.) (Bakelite Block)	3903-AB
41	Resistor (1 Megohm) (Brown-Black-Green)	33-1096
42	Condenser (.1 Mfd.)	30-4122
43	Resistor (.1 Meg.) (White-White-Orange)	6099
44	Resistor (B. C. Wire-wound) (22, 235 ohms)	33-3037
45	Resistor (.1 Meg.) (White-White-Orange)	6099
46	Condenser (.05 Mfd. Tubular)	30-4123
47	Resistor (37,000 ohms) (Orange-Violet-Orange)	33-1098
48	Filter Choke	32-7018
49	Condenser (Electrolytic—6 Mfd.)	30-2021
50	Condenser (Electrolytic—8-8 Mfd.)	30-2028
51	Condenser (.09 Mfd. Bakelite Block)	4989-D
52	Power Transformer	8046
53	Condenser (.015 Mfd. Bakelite Block)	3793-W
54	Condenser (.05 Mfd. Tubular)	30-4020
55	Dial Light	6608
	Four Prong Socket	7544
	Six Prong Socket	7547
	Seven Prong Socket	27-6005
	Tube Shield	28-1107
	Chassis Mounting Screw	W-567
	Chassis Mounting Washer (Metal)	W-315
	Chassis Mounting Washer (Rubber)	5189
	Knob (Large)	27-4051
	Knob (Small)	27-4052
	Dial Assembly	31-1234
	Dial Scale	27-5057
	A. C. Cord and Plug Assembly	L-943A

PHILCO AUTO RADIO MODEL 5

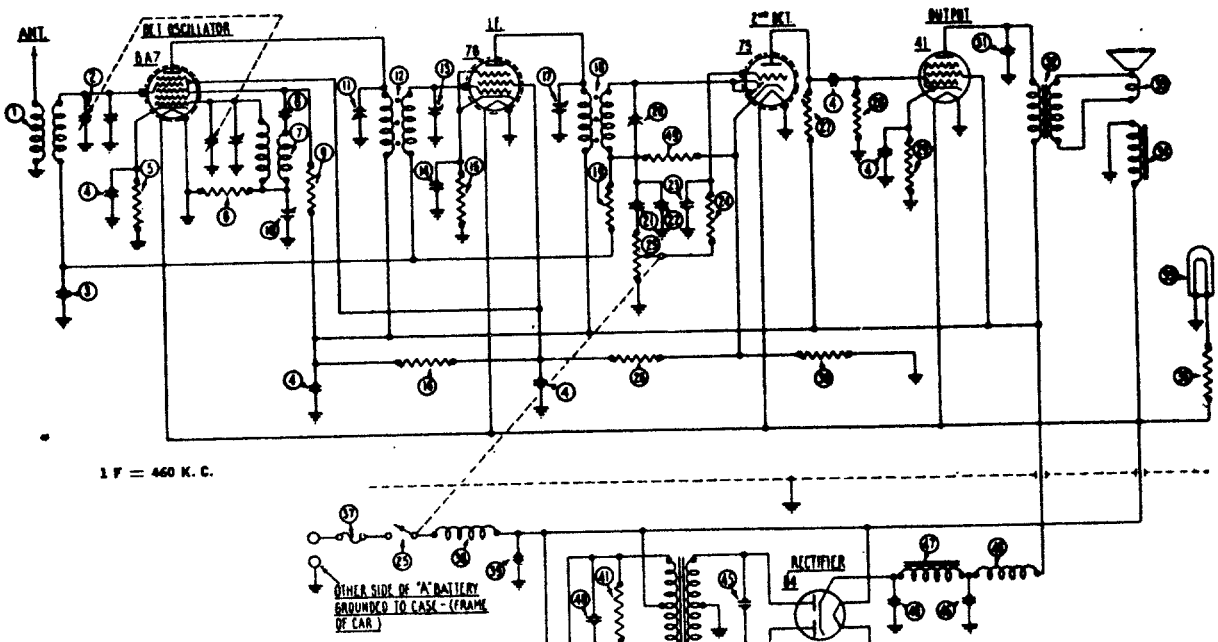

FILTER CONDENSER 30-4017

④ on Figures 3 and 4

There are five sections in this filter condenser, all terminated with wire leads. The two green leads connect to the .1 mfd. section, which is used for coupling the plate output of the 75 tube to the grid of the 41 tube.

The remaining four sections are all grounded to the can on one side. The white leads connect to two .25 mfd. sections. The first section is connected to the cathode of the 6A7 tube. The second section is connected to the screen of the 78 tube.

The red lead from the .5 mfd. section is connected to the B+ side of all the plate circuits. A 20 mfd. section terminates in a black lead, which in turn is connected to the cathode of the 41 tube.

FILTER CONDENSER 30-2008

⑩ on Figures 3 and 4

The condenser consists of two sections, a 4 mfd. section and an 8 mfd. section, both of them grounded on one side.

The 4 mfd. section terminates in a red lead, which is connected to the cathode of the 84 tube. The 8 mfd. section terminates in a green lead, which is connected between the two chokes in the rectifier filter circuit.

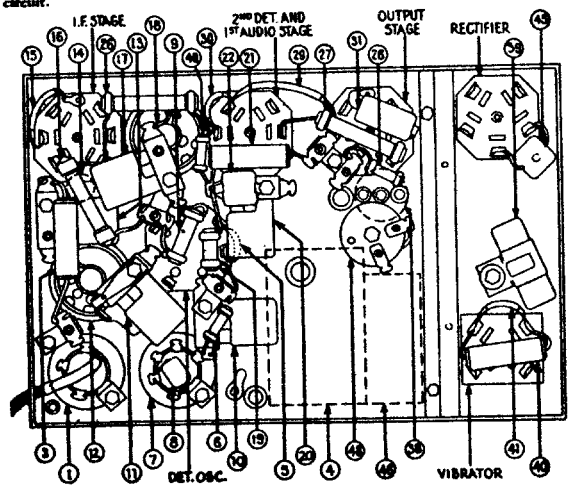

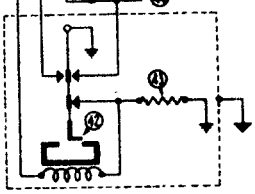

FIGURE 3

PARTS LIST

No.	Description	Part No.
①	Antenna Transformer	33-1084
②	Tuning Condenser	31-1019
③	Condenser (.05) mfd.)	30-4020
④	Filter Condenser (.25, .25, .5, 20 mfd.)	30-4017
⑤	Resistor (200 ohms)	7217
⑥	Resistor (13,008 ohms)	3387
⑦	Oscillator Transformer	33-1085
⑧	Condenser (250 mmfd.)	3083
⑨	Resistor (15,000 ohms)	6206
⑩	Padder	040006
⑪	Padder	04000J
⑫	First I. F. Transformer	33-1000
⑬	Padder	04000Y
⑭	Condenser (.5 mfd.)	30-4016
⑮	Resistor (1008 ohms)	33-3017
⑯	Resistor (10,000 ohms)	4412
⑰	Padder	04000D
⑱	Second I. F. Transformer	33-1087
⑲	Resistor (1,000,000 ohms)	4408
⑳	Padder	040002
㉑	Condenser (.05 mfd.)	30-4020
㉒	Condenser (250 mmfd.)	3083
㉓	Condenser (500 mmfd.)	3918
㉔	Resistor (100,000 ohms)	6060
㉕	Volume Control & Switch	33-5009
㉖	Resistor (32,000 ohms)	3535
㉗	Resistor (250,000 ohms)	3748
㉘	Resistor (500,000 ohms)	6007
㉙	Resistor (700 ohms)	6443
㉚	Resistor (400 ohms)	33-3016
㉛	Condenser (6,000 mmfd.)	30-1002
㉜	Output Transformer	33-7008
㉝	Cone & Voice Coil	02881
㉞	Field Coil Assembly	36-3046
㉟	Pilot Lamp	6002
㊱	Resistor (7 ohms)	5116
㊲	Fuse (15 amp.)	7227
㊳	R. F. Choke	32-1032
㊴	Condenser (.5 mfd.)	30-4015
㊵	Condenser (.05 mfd.)	30-4020
㊶	Resistor (200 ohms)	7217
㊷	Vibrator	41-3186
㊸	Resistor (200 ohms)	7217
㊹	Transformer	33-7030
㊺	Condenser (6000 mmfd.)	30-1002
㊻	Condenser (4 mfd., 5 mfd.)	30-2008
㊼	Filter Choke	32-7026
㊽	R. F. Choke (high voltage)	32-1078
㊾	Resistor (250,000 ohms)	4410
	Control Assembly (direct drive)	42-5008
	Tuning Shaft	26-9006
	Volume Shaft	28-5007
	Dial	27-5006
	Knob	83234
	Fuse	7227
	Fuse Insulator	27-7181
	Antenna Lead	38-5131
	"A" Lead	38-5296
	Bracket (control mtg.)	6035
	Studs (set mtg.)	28-6036
	Nuts (set mtg.)	W55A
	Strap (control mtg.)	04344

MANUAL OF MOST-OFTEN-NEEDED RADIO DIAGRAMS

PHILCO AUTO RADIO MODEL T11

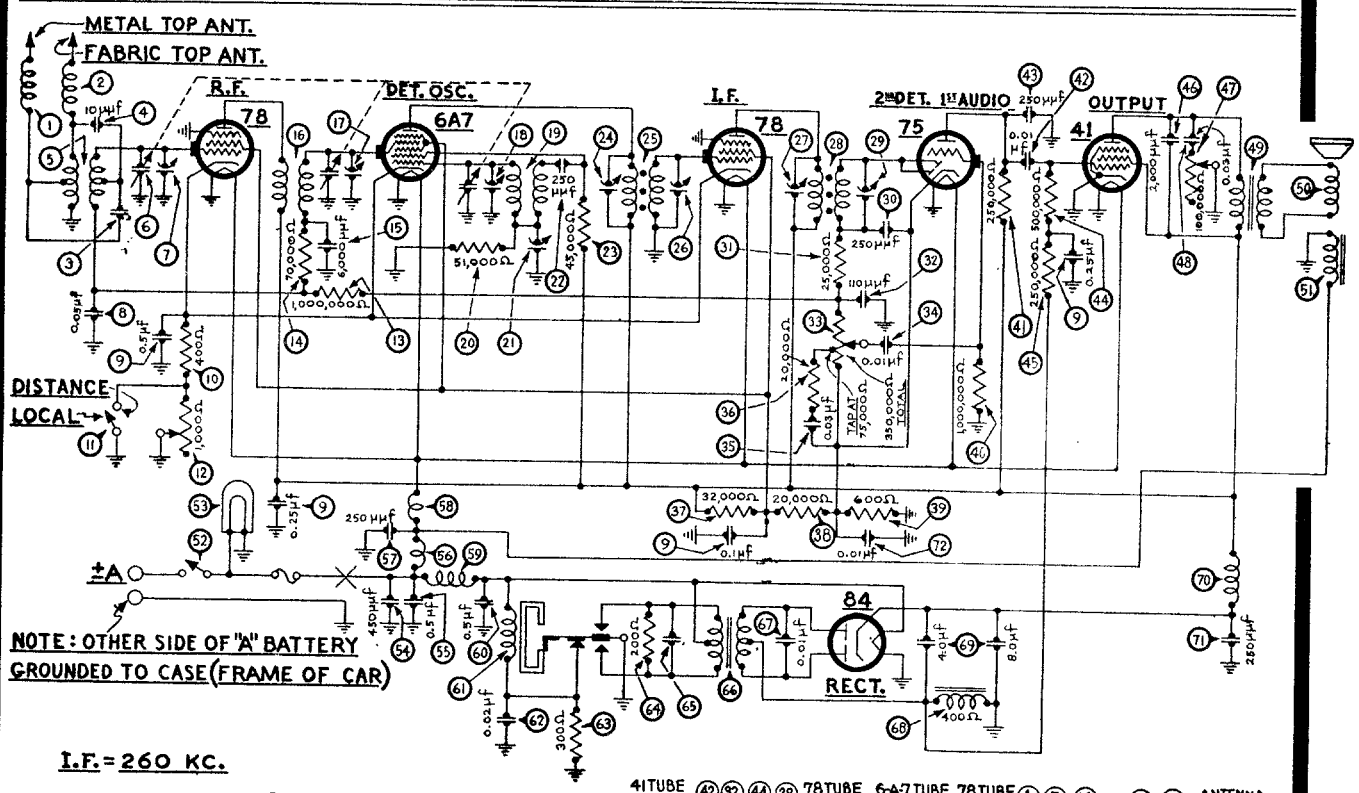

I.F. = 260 KC.

PARTS LIST

No.	Description	Part No.
1	Antenna Choke	38-7210
2	Antenna Choke	38-7210
3	Condenser (70 mmfd.)	30-1068
4	Condenser (10 mmfd.)	30-1065
5	Antenna Transformer	32-1925
6	Tuning Condenser	31-1674
7	First Padder (on Tun. Cond.)	
8	Condenser (.05 mfd.)	30-4444
9	Condenser (.1-.25-.25-.5 mfd.)	30-4374
10	Resistor (400 ohms)	33-1211
11	Sensitivity Control Switch	42-1140
12	Sensitivity Control	33-5129
13	Resistor (1,000,000 ohms)	33-510344
14	Resistor (70,000 ohms)	33-370334
15	Condenser (6,000 mmfd.)	30-4445
16	R. F. Transformer	32-1926
17	Second Padder (on Tun. Cond.)	
18	Third Padder (on Tun. Cond.)	
19	Oscillator Transformer	32-1927
20	Resistor (51,000 ohms)	33-351344
21	Low Frequency Padder	31-6056
22	Condenser (250 mmfd.)	30-1032
23	Resistor (45,000 ohms)	33-345344
24	Padder (Pri. 1st I. F. Trans.)	
25	First I. F. Transformer	32-1260
26	Padder (Sec. 1st I. F. Trans.)	
27	Padder (Pri.. 2nd I. F. Trans.)	
28	Second I. F. Transformer	32-2164
29	Padder (Sec 2nd I. F. Trans.)	
30	Condenser (250 mmfd.)	30-1032
31	Resistor (25,000 ohms)	33-325344
32	Condenser (110 mmfd.)	30-1031
33	Volume Control (350,000 ohms)	33-5121
34	Condenser (.01 mfd.)	30-4124
35	Condenser (.03 mfd.)	30-4449
36	Resistor (20,000 ohms)	33-320334
37	Resistor (32,000 ohms)	33-332434
38	Resistor (20,000 ohms)	33-320334
39	Resistor (600 ohms)	33-1212
40	Resistor (1,000,000 ohms)	33-510344
41	Resistor (250,000 ohms)	33-424344
42	Condenser (.01 mfd.)	30-4145
43	Condenser (250 mmfd.)	30-1032
44	Resistor (500,000 ohms)	33-449344
45	Resistor (250,000 ohms)	33-424344
46	Condenser (2,000 mmfd.)	30-4177
47	Tone Control	
48	Condenser (.03 mfd.)	
49	Output Transformer	
50	Cone & Voice Coil	
51	Field Coil Assembly	
52	On & Off Switch	
53	Pilot Lamp	
54	Condenser (450 mmfd.)	
55	Condenser (.5 mfd.)	
56	"A" Choke	
57	Condenser (250 mmfd.)	
58	Filament Choke	
59	Vibrator Choke	
60	Condenser (.5 mfd.)	
61	Vibrator	
62	Condenser (.02 mfd.)	
63	Resistor (300 ohms)	
64	Resistor (200 ohms)	
65	Condenser (.05 mfd.)	
66	Power Transformer	
67	Condenser (.01 mfd.)	
68	Filter Choke	
69	Filter Condenser (4-8 mfd.)	
70	R. F. Choke	
71	Condenser (250 mmfd.)	
72	Condenser (.01 mfd.)	

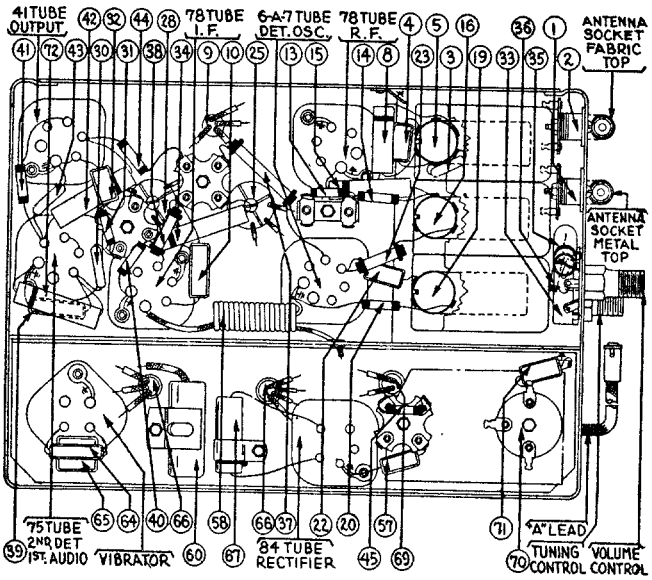

CHANGES — "Run Numbers" are stamped on the chassis sub-base for identification. These "Run Numbers" are changed consecutively as major changes are made in the Receiver wiring and parts.

RUN No. 3 — A 250 mmfd. condenser has been added to the Receiver. One side is connected between resistors 57 and 58 and the other side to ground.

RUN No. 4 — The 250 mmfd. condenser added in Run No. 3 has been removed.

RUN No. 5 — The Antenna Transformer 5 is replaced with a new type having the same part number. It can be identified by the red and blue paint marks on the fibre.

RUN No. 6 — Condenser 71 has been removed from the cathode side of the "B" choke 70 and connected to the plate side of choke 70.

RUN No. 6A — A 250 mmfd. condenser has been added to the Receiver. One side is connected between resistors 44 and 43 and the other side to ground.

RUN No. 8 — Condenser 65 removed (1250 mmfd.). Part No. 30-4020 added. (.05 mfd.)

RUN No. 13 — The 250 mmfd. condenser that was added in Run No. 6A has been removed.

RUN No. 14 — Resistor 10 removed (400 ohms). Part No. 33-1225 added. (350 ohms.)

No major changes were involved in Run Nos. 2, 7, 9, 10, 11, 12.

COMPILED BY M. N. BEITMAN, SUPREME PUBLICATIONS

MODEL 16

Philco Model 16
I.F. 460 KC.

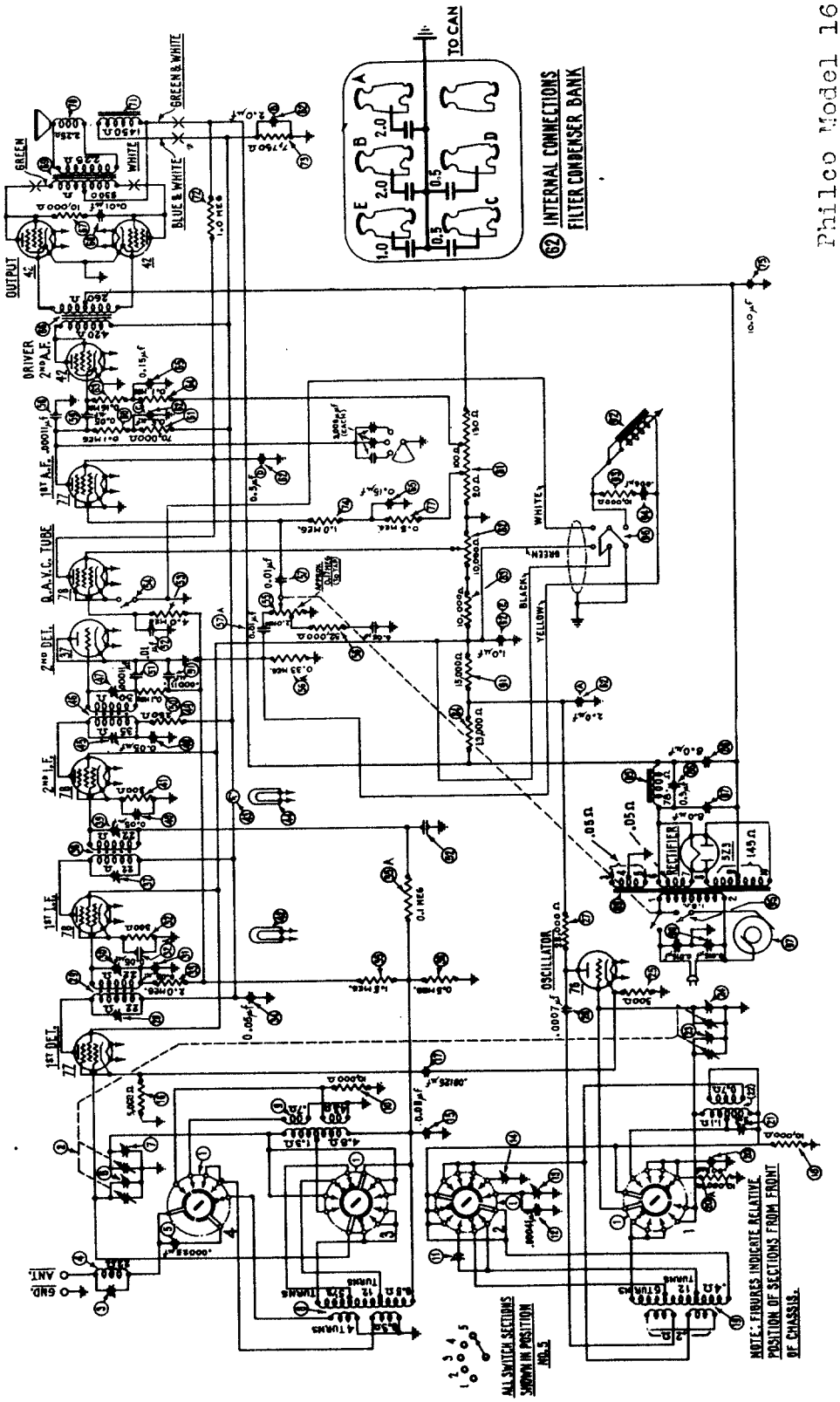

Models 20, 20-A and 21

Philco Radio

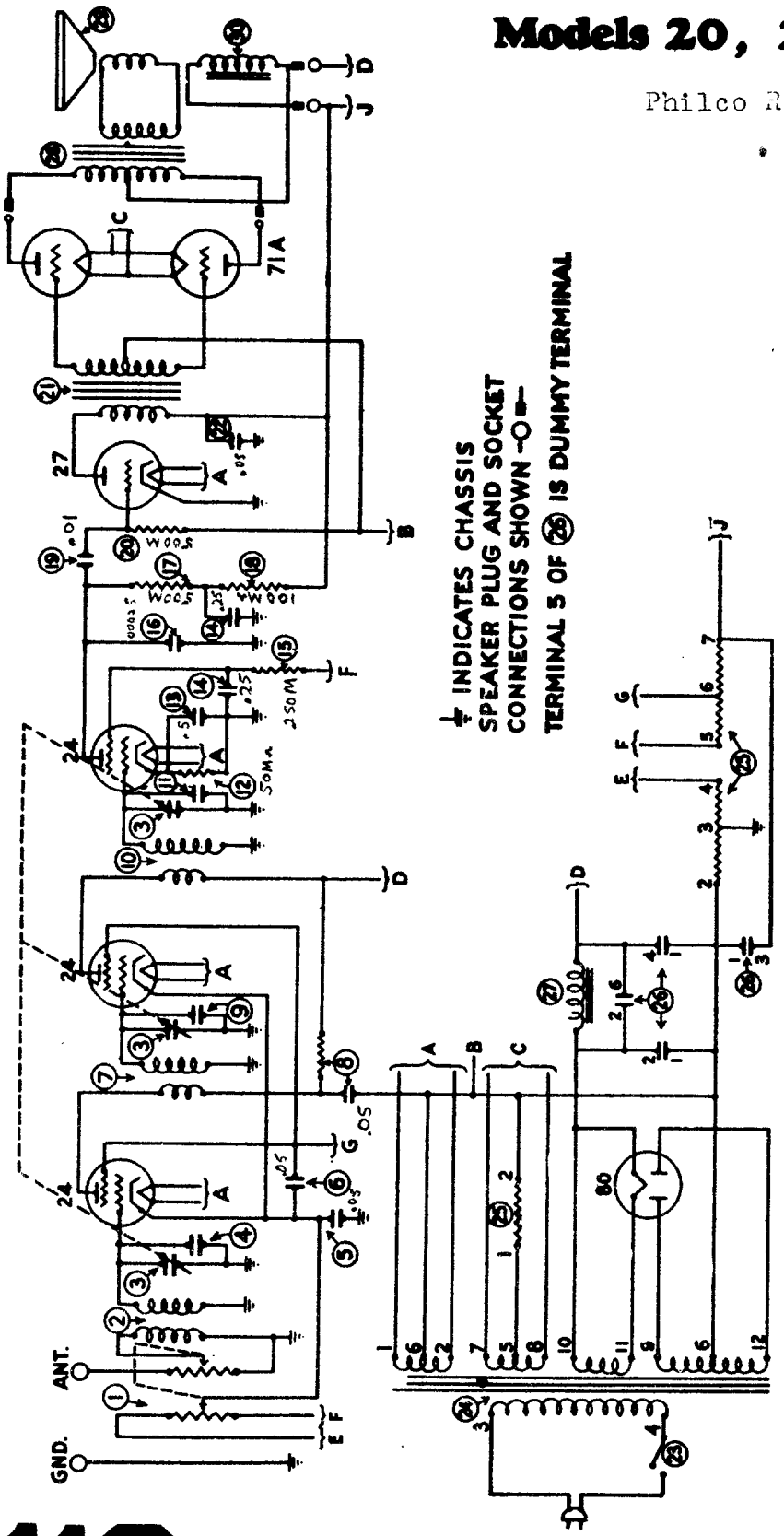

No.	Description	Part No.
1	Volume Control	4094
2	First R. F. Transformer	3884-N
3	Tuning Condenser	4200-A
4	First Compensating Condenser (Part of Tuning Condenser Assembly)	
5	By-Pass Condenser (.05)	3615-J
6	By-Pass Condenser (.05)	3615-M
7	Second R. F. Transformer	3884-P
8	By-Pass Condenser (.05) and Resistor	3615-K
9	Second Compensating Condenser (Part of Tuning Condenser Assembly)	
10	Third R. F. Transformer	3884-P
11	Third Compensating Condenser (Part of Tuning Condenser Assembly)	
12	Resistor (50,000)	4237
13	By-Pass Condenser (.5)	3583
14	By-Pass Condenser (double .25)	3557
15	Resistor (250,000)	3768
16	By-Pass Condenser (.00025)	3082
17	Resistor (500,000)	3769
18	Resistor (100,000)	3767
19	Condenser (.01)	3903-F
20	Resistor (500,000)	3769
21	Push-pull Input Transformer	4232
22	By-Pass Condenser (.05)	3615-L
23	On-off Switch	4095
24	Power Transformer (50-60 cycle)	4234
25	Power Transformer (25-60 cycle)	4268
26	B. C. Resistor	4230
27	Filter Condenser (50-60 cycle)	4235
28	Filter Condenser (25-60 cycle)	4269
29	Filter Choke	4231
30	Push-Pull Output Transformer	2766
31	Voice Coil and Cone	2769-B
32	Field Coil	2768

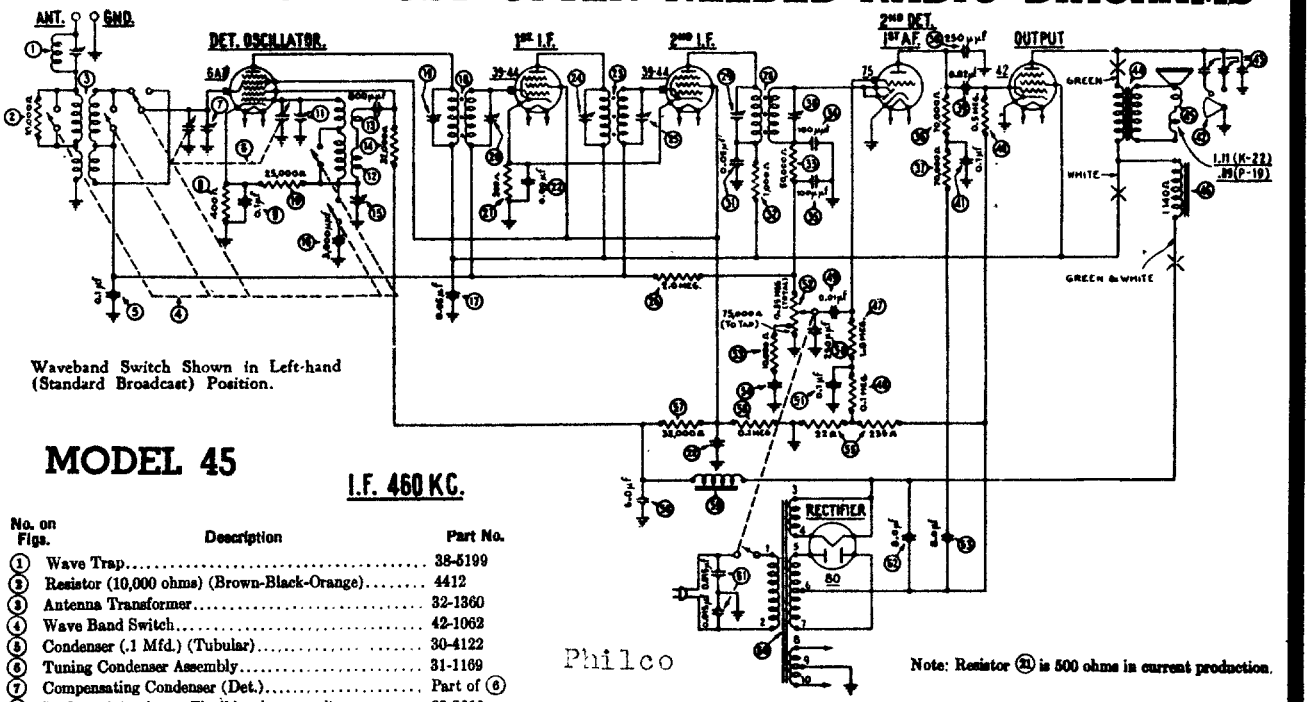

Waveband Switch Shown in Left-hand (Standard Broadcast) Position.

Note: Resistor (21) is 500 ohms in current production.

MODEL 45

I.F. 460 KC.

No. on Figs.	Description	Part No.
(1)	Wave Trap	38-5199
(2)	Resistor (10,000 ohms) (Brown-Black-Orange)	4412
(3)	Antenna Transformer	32-1360
(4)	Wave Band Switch	42-1062
(5)	Condenser (.1 Mfd.) (Tubular)	30-4122
(6)	Tuning Condenser Assembly	31-1169
(7)	Compensating Condenser (Det.)	Part of (6)
(8)	Resistor (400 ohms—Flexible wire wound)	33-3016
(9)	Condenser (.1 Mfd.) (Tubular)	30-4122
(10)	Resistor (25,000 ohms) (Red-Green-Orange)	4516
(11)	Compensating Condenser (Osc. H. F.)	Part of (6)
(12)	Oscillator Transformer	32-1361
(13)	Condenser (.0008 Mfd.—Mica)	5878
(14)*	Resistor (32,000 ohms) (Orange-Red-Orange)	3525
(15)	Compensating Condenser (Osc. L. F.)	04000-S
(16)	Condenser (.003 Mfd.—Mica)	7301
(17)	Condenser (.05 Mfd.—Tubular)	30-4123
(18)	1st I. F. Transformer	32-1362
(19)	Compensating Condenser (1st I. F. Primary)	Part of (16)
(20)	Compensating Condenser (1st I. F. Secondary)	Part of (16)
(21)	Resistor (500 ohms—Flexible wire wound)	6977
(22)	Condenser (.09 Mfd. twin) (Bakelite block)	4989-Z
(23)	2d I. F. Transformer	32-1363
(24)	Compensating Condenser (2d I. F. Primary)	Part of (16)
(25)	Compensating Condenser (2d I. F. Secondary)	Part of (23)
(26)	Resistor (2 megs.) (Red-Black-Green)	5872
(27)	Pilot Lamp	6608
(28)	3d I. F. Transformer	32-1364
(29)	Compensating Condenser—3d I. F. Primary	Part of (16)
(30)	Compensating Condenser—3d I. F. Secondary	Part of (16)
(31)	Condenser (.05 Mfd. Tubular)	30-4123
(32)	Resistor (1,000 ohms) (Brown-Black-Red)	5837
(33)	Resistor (50,000 ohms) (Green-Brown-Orange)	4518
(34)	Condenser (.0001 Mfd. Mica)	30-1051
(35)	Condenser (.0001 Mfd. Mica)	30-1051
(36)	Resistor (70,000 ohms) (Violet-Black-Orange)	5385
(37)	Resistor (70,000 ohms) (Violet-Black-Orange)	5385
(38)	Condenser (.00025 Mfd. Mica)	5858
(39)	Condenser (.02 Mfd. Tubular)	30-4113
(40)	Resistor (.5 meg.) (Yellow-White-Yellow)	4517
(41)	Condenser (.1 Mfd.) (Tubular)	30-4170
(42)	Tone Control	30-4178
(43)	Condensers	Inside 42
(44)	Output Transformer (Code 121)	32-7041
	Output Transformer (Code 122)	2580
(45)	Voice Coil & Cone Assembly	
	P-19 (Compact)	36-3027
	K-22 (Lowboy)	36-3174
(46)	Field Coil and Pot Assembly	
	P-19 (Compact)	36-3298
	K-22 (Lowboy)	02767

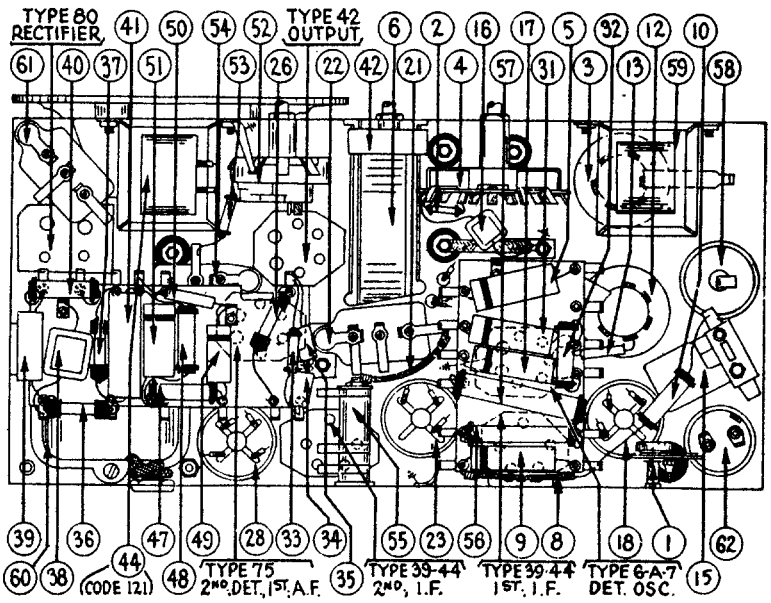

(47)	Resistor (1 meg.) (Brown-Black-Green)	4409
(48)	Resistor (.1 meg) (White-White-Orange)	4411
(49)	Condenser (.01 Mfd. Tubular)	30-4124
(50)	Condenser (.00025 Mfd. Mica)	5858
(51)	Condenser (.1 Mfd. Tubular)	30-4122
(52)	Volume Control and On-Off Switch	33-5066
(53)	Resistor 10,000 ohms (Brown-Black-Orange)	33-1000
(54)	Condenser (Code 121) (.05 Mfd.) (Bakelite Block)	3615-W
	Condenser (Code 122) (.09 Mfd.) (Bakelite Block)	4989-AM
(55)	Voltage Divider (BC Resistor 22—235 ohms) (Wire wound)	33-3037
(56)	Resistor .1 meg (White-White-Orange)	3767
(57)	Resistor 32,000 ohms (Orange-Red-Orange)	33-1026
(58)	Condenser (Electrolytic—6 Mfd.)	30-2020
(59)	Filter Choke	32-7018
(60)	Power Transformer	32-7226
(61)	Condenser (.015 Mfd. twin—Bakelite block)	3793-E
(62), (63)	Condenser (Electrolytic 8—8 Mfd. 450 Volts)	30-3028

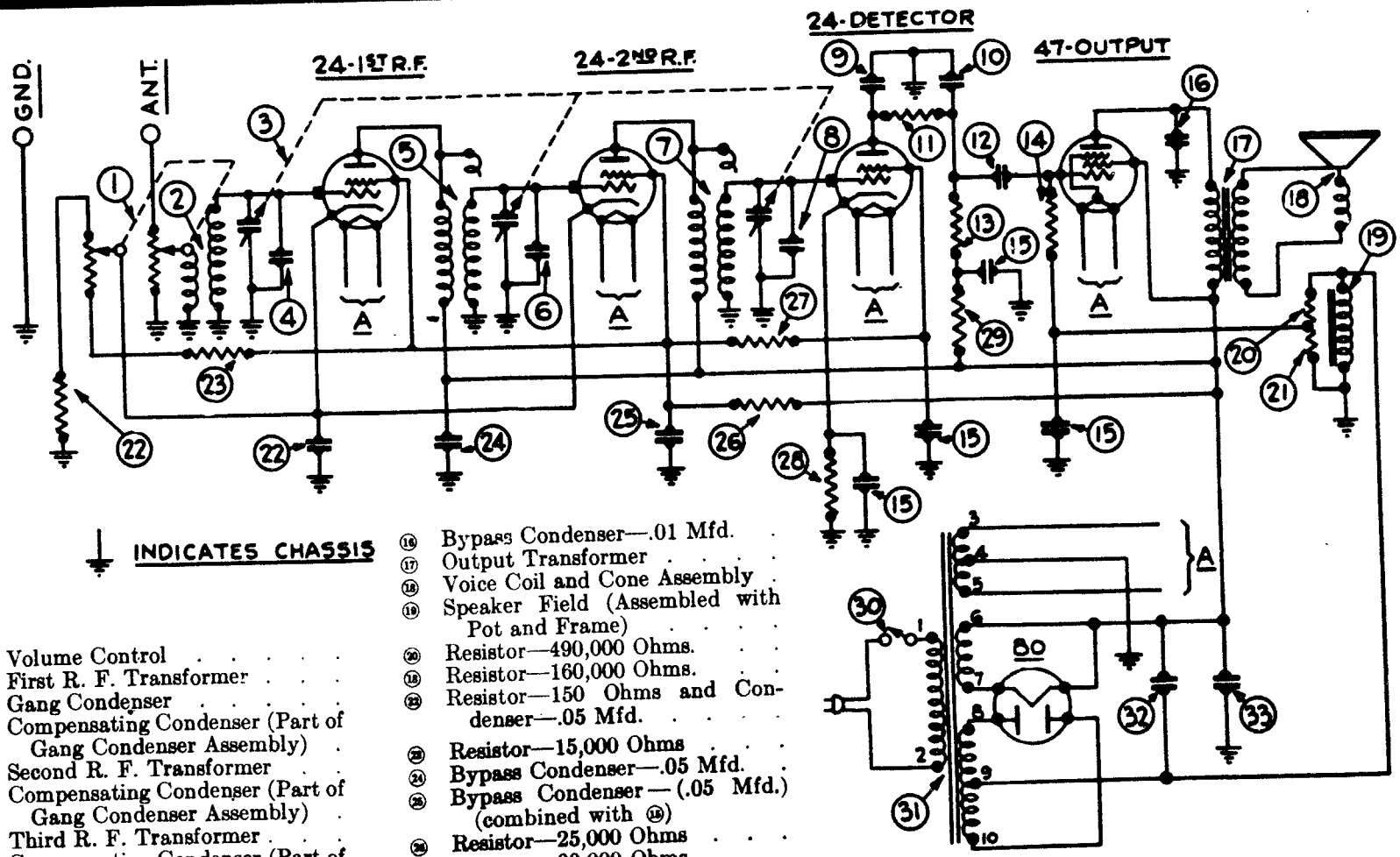

INDICATES CHASSIS

1. Volume Control
2. First R. F. Transformer
3. Gang Condenser
4. Compensating Condenser (Part of Gang Condenser Assembly)
5. Second R. F. Transformer
6. Compensating Condenser (Part of Gang Condenser Assembly)
7. Third R. F. Transformer
8. Compensating Condenser (Part of Gang Condenser Assembly)
9. Condenser—250 Mmf.
10. Condenser—250 Mmf.
11. Resistor—10,000 Ohms
12. Condenser—.01 Mfd.
12. Resistor—240,000 Ohms
13. Resistor—490,000 Ohms
15. Bypass Condenser (.15 Mfd., .25 Mfd., 2-.5 Mfd., .1 Mfd.) 50-60 cycles
16. Bypass Condenser—.01 Mfd.
17. Output Transformer
18. Voice Coil and Cone Assembly
19. Speaker Field (Assembled with Pot and Frame)
20. Resistor—490,000 Ohms.
18. Resistor—160,000 Ohms.
22. Resistor—150 Ohms and Condenser—.05 Mfd.
23. Resistor—15,000 Ohms
24. Bypass Condenser—.05 Mfd.
26. Bypass Condenser—(.05 Mfd.) (combined with 18)
26. Resistor—25,000 Ohms
25. Resistor—99,000 Ohms
26. Resistor—32,000 Ohms
26. Resistor—99,000 Ohms
30. On-Off Switch
25. Power Transformer—50-60 cycles
26. Electrolytic Condenser—6 Mfd.—50-60 cycles
Electrolytic Condenser—10 Mfd. 25-40 cycles
26. Electrolytic Condenser—6 Mfd.—

Philco Radio

MODELS 50 AND 50-A

MANUAL OF MOST-OFTEN-NEEDED RADIO DIAGRAMS

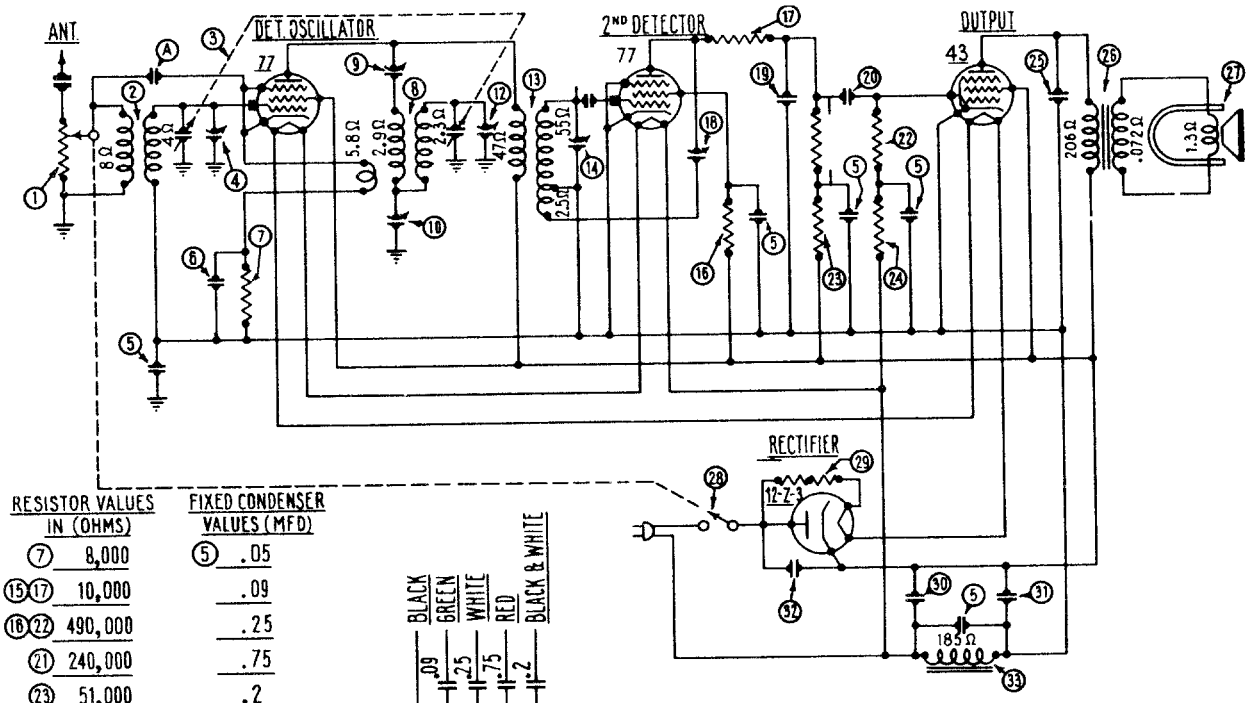

RESISTOR VALUES IN (OHMS)	FIXED CONDENSER VALUES (MFD)
(7) 8,000	(5) .05
(15)(17) 10,000	.09
(16)(22) 490,000	.25
(21) 240,000	.75
(23) 51,000	.2
(24) 99,000	(6) .0014
(29) 216 (TOTAL)	(11) 10.0
	(19) .00025

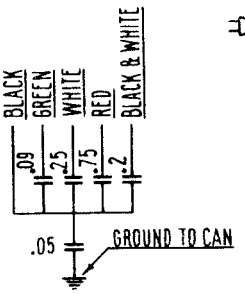

(5) INTERNAL CONNECTIONS

MODEL 53 Philco Radio

I.F. 450 KC.

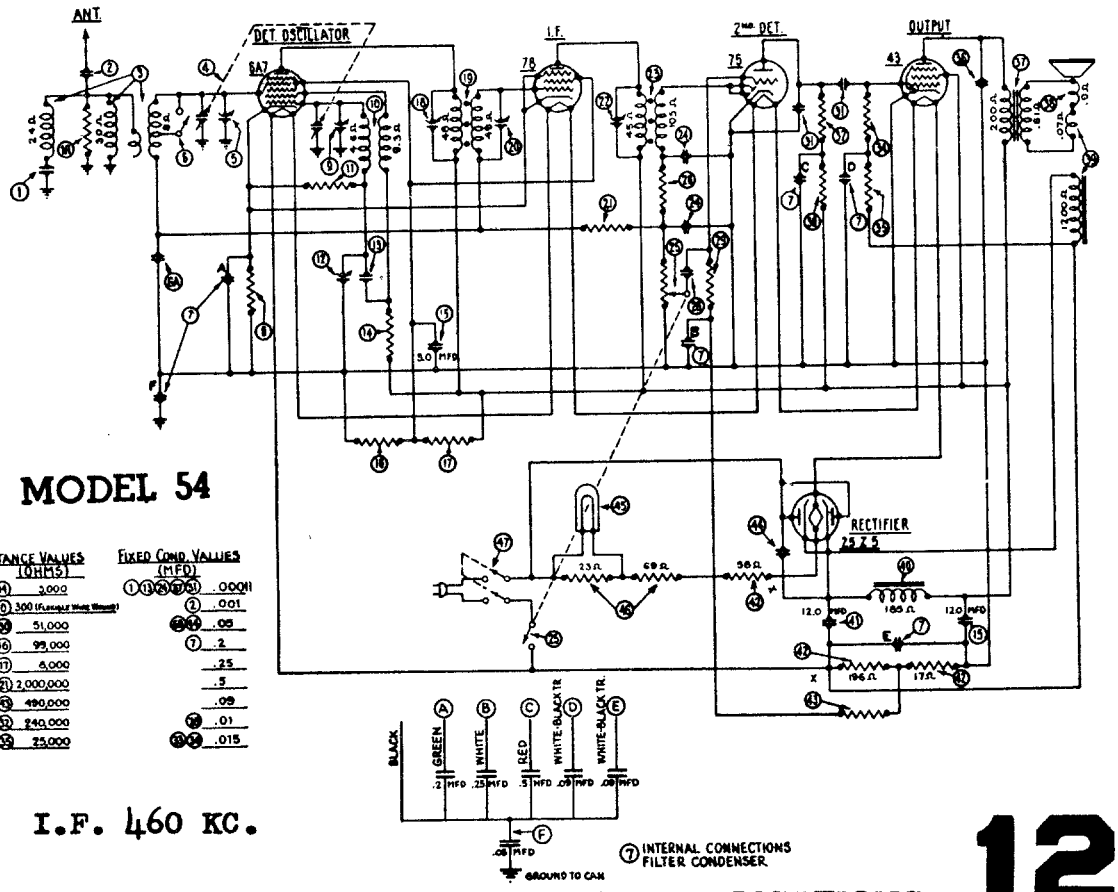

MODEL 54

RESISTANCE VALUES (OHMS)	FIXED COND. VALUES (MFD)
(14)(18) 3,000	(1)(11)(28)(37)(51) .0001
(6) 300 (Filament Wire Wound)	(2) .001
(11)(25)(39) 51,000	(3)(4) .05
(16) 99,000	(7) .2
(17) 6,000	.25
(21) 2,000,000	.5
(26)(27)(31) 490,000	.09
(32) 240,000	(38) .01
(35) 25,000	(33)(34) .015

I.F. 460 KC.

(7) INTERNAL CONNECTIONS FILTER CONDENSER

COMPILED BY M. N. BEITMAN, SUPREME PUBLICATIONS

Model 53

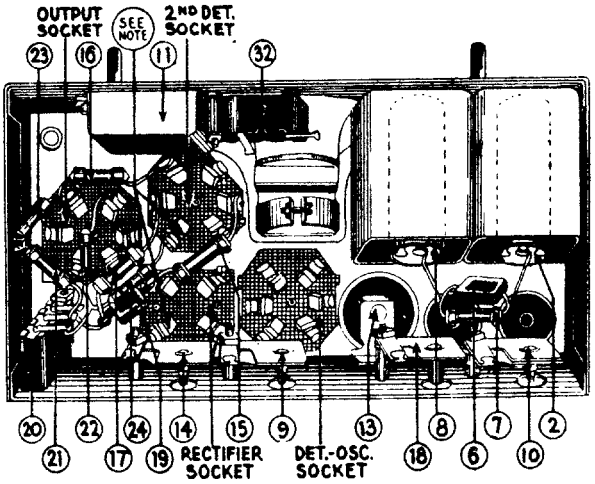

No. on Figs. 2, 3 and 4	Description	Part No.
1	Volume Control	33-5001
2	Antenna Transformer	32-1000
3	Tuning Condenser Assembly	31-1000
4	Compensating Condenser (Part of Tuning Condenser Assembly)	
5	Filter Condenser Block (.05-.09-.25-.75-.2 Mfd.)	30-4000
6	Condenser (.0014 Mfd.)	7007
7	Resistor (8,000 ohms) Gray-Black-Red	5838
8	Oscillator Transformer	32-1001
9	Compensating Condenser (I.F. Primary)	04000-A
10	Compensating Cond. (Low Frequency)	04000-S
11	Condenser (10.0 Mfd.)	7440
12	Compensating Condenser (Part of Tuning Condenser Assembly)	
13	I.F. Transformer	32-1002
14	Compensating Cond. (I.F. Secondary)	04000-A
15	Resistor (10,000 ohms) Brown-Black-Orange	4412
16	Resistor (490,000 ohms) Yellow-White-Yellow	4517
17	Resistor (10,000 ohms) Brown-Black-Orange	4412
18	Compensating Condenser (Regeneration)	04000
19	Condenser (.00025 Mfd.)	3082
20	Condenser (.01 Mfd.)	3903-AM
21	Resistor (240,000 ohms) Red-Yellow-Yellow	4410
22	Resistor (490,000 ohms) Yellow-White-Yellow	4517
23	Resistor (51,000 ohms) Green-Brown-Orange	4518
24	Resistor (99,000 ohms) White-White-Orange	4411
25	Condenser (.015 Mfd.)	3793-S
26	Output Transformer	32-7000
27	Voice Coil and Cone Assembly	36-3000
28	A. C. Switch (Part of Volume Control Assembly)	33-5001
29	Resistors (2 Wire Wound-108 ohms each)	33-3000 33-3001
30	Electrolytic Condenser (8 Mfd.)	30-2000
31	Electrolytic Condenser (8 Mfd.)	30-2000
32	Condenser (.05 Mfd.)	3615-E
33	Filter Choke	32-7001
	Tube Shield	7172
	Knobs (Both Controls)	03064
	Four Prong Socket	7544

Model 54

(A. C.—D. C.)

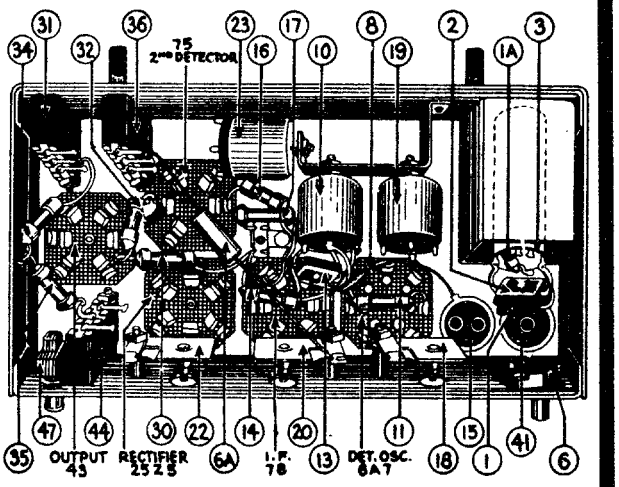

No. on Figs.	Description	Part No.
1	Condenser	30-1005
1a	Resistor (Green-Black-Red)	6096
2	Condenser	5215
3	Antenna Transformer Assembly	32-1117
4	Tuning Condenser Assembly	31-1027
5	Compensating Condenser (Part of 4)	
6	Wave Band Switch	42-1027
6a	Condenser	30-4020
7	Filter Condenser (Block)	30-4023
8	Resistor (Flexible)	33-3010
9	Compensating Condenser (High Frequency 1400) Part of 4	
10	Oscillator Coil	32-1118
11	Resistor (Green-Brown-Orange)	4518
12	Compensating Condenser (Low Freq.)	04000-B
13	Condenser	4519
14	Resistor (Green-Black-Red)	5310
15	Electrolytic Condenser (Double)	30-2002
16	Resistor (White-White-Orange)	4411
17	Resistor (Gray-Black-Red)	5838
18	Compensating Cond. (1st I. F. Primary)	04000-A
19	1st I. F. Transformer	32-1115
20	Compensating Condenser (1st I. F. Secondary)	04000-A
21	Resistor (Red-Black-Green)	5872
22	Compensating Cond. (2nd I. F. Primary)	04000-A
23	2nd I. F. Transformer	32-1116
24	Condenser (Double)	8035-G
25	Volume Control and "On-Off" Switch	33-5010
26	Resistor (Green-Brown-Orange)	4518
28	Condenser	3903AM
29	Resistor (Yellow-White-Yellow)	6097
29	Resistor (Green-Brown-Orange)	4518
31	Condenser (Double)	8035-F
32	Resistor (Red-Yellow-Yellow)	4410
34	Resistor (Yellow-White-Yellow)	4517
35	Resistor (Red-Green-Orange)	4516
36	Condenser	3793-Y
37	Output Transformer	32-7020
38	Voice Coil and Cone Assembly	36-3029
39	Field Coil and Pot Assembly	36-3040
40	Filter Choke	32-7036
41	Electrolytic Condenser	30-2001
42	Resistor (Wire Wound)	33-3012
43	Resistor (Yellow-White-Yellow)	6097
44	Condenser	3615-B
45	Pilot Lamp	4567
46	Resistor (Wire Wound)	33-3011
47	Safety Switch	42-1026
	Tube Shield	28-1130
	Six Prong Socket	7547
	Seven Prong Socket	27-6005

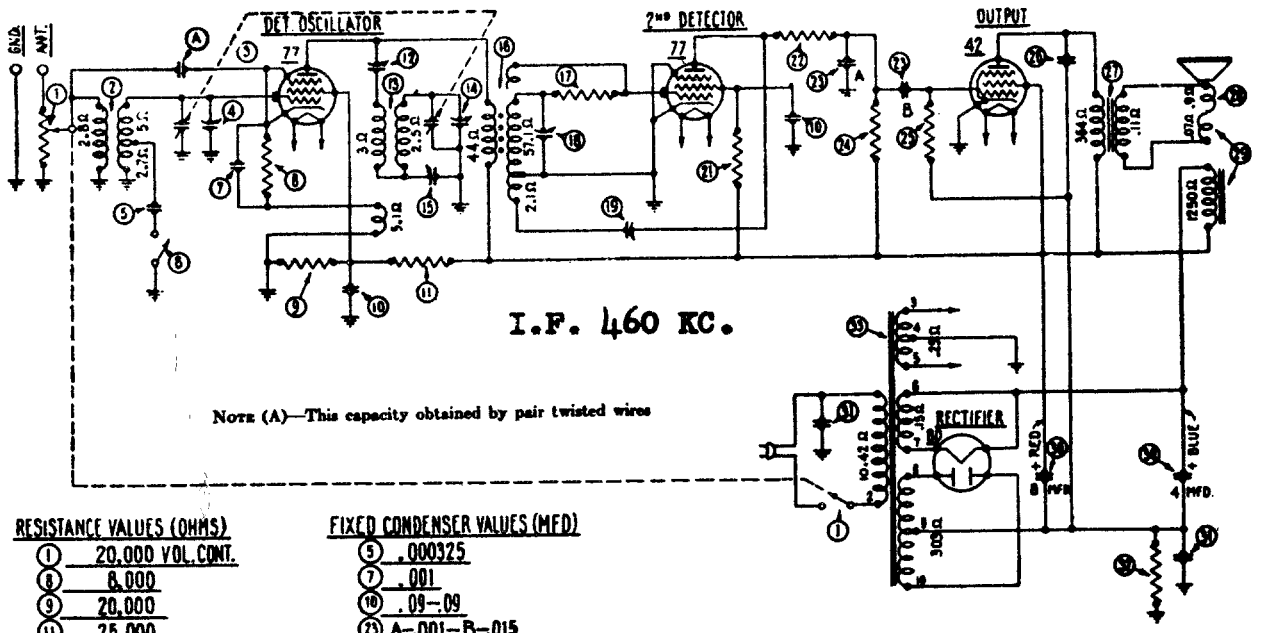

RESISTANCE VALUES (OHMS)

(1)	20,000 VOL. CONT.
(8)	8,000
(9)	20,000
(11)	25,000
(17)	4,000,000
(21)	1,000,000
(22)	10,000
(24)	240,000
(25)	490,000
(32)	325 (WIRE WOUND)

FIXED CONDENSER VALUES (MFD)

(5)	.000325
(7)	.001
(10)	.09-.09
(23)	A-.001-B-.015
(26)	.006
(31)	.015-.015

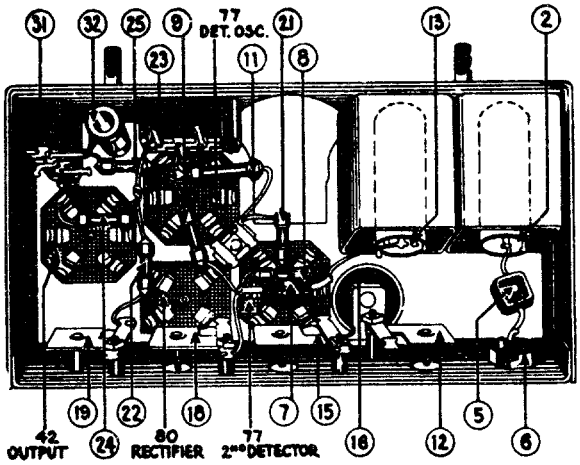

PHILCO

MODEL 57

No. on Figs.	Description	Part No.
(1)	Volume Control and "On-Off" Switch	33-5011
(2)	Antenna Transformer	32-1153
(3)	Tuning Condenser Assembly	31-1035
(4)	Compensating Condenser (Antenna; Part of (3))	.....
(5)	Condenser	30-1004
(6)	Wave Band Switch	42-1027
(7)	Condenser	5215
(8)	Resistor (Gray-Black-Red)	5838
(9)	Resistor (Red-Black-Orange)	6650
(16)	Condenser (Double)	4989-C
(11)	Resistor (Red-Green-Orange)	3656
(12)	Compensating Condenser (I. F. Primary)	04000-A
(13)	Oscillator Coil	32-1023
(14)	Compensating Cond. (High Frequency—1400 kilocycles) (Part of (3))	.....
(18)	Compensating Cond. (Low Frequency)	04000-S
(16)	I. F. Transformer	32-1155
(22)	Resistor (Yellow-Black-Green)	6010
(18)	Compensating Cond. (I. F. Secondary)	04000-D
(18)	Compensating Condenser	04000
(21)	Resistor (Brown-Black-Green)	4409
(22)	Resistor (Brown-Black-Orange)	4412
(18)	Condenser (Double)	7762-B
(24)	Resistor (Red-Yellow-Yellow)	4410
(25)	Resistor (Yellow-White-Yellow)	3769
(26)	Condenser	7625-E
(27)	Output Transformer	32-7041
(18)	Voice Coil and Cone Assembly	36-3029
(29)	Field Coil and Pot Assembly	36-3081
(30)	Electrolytic Condenser (Double)	30-2004
(31)	Condenser (Double)	3793-R
(16)	Resistor (Wire Wound)	7465
(30)	Power Transformer	32-7046
	Tube Shield	28-1107
	Four Prong Socket	7544
	Six Prong Socket	7547

Model 60

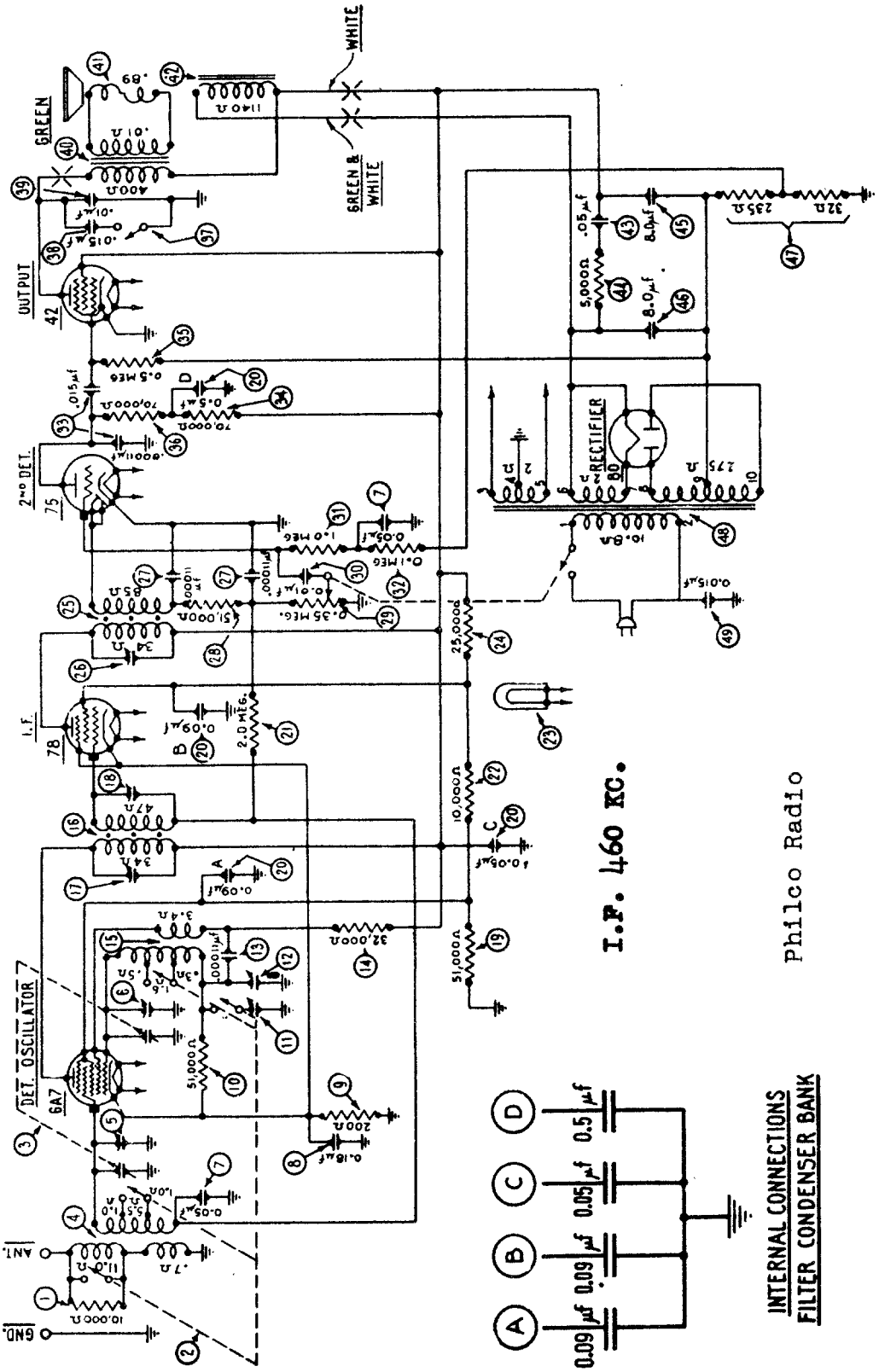
WHITE
GREEN
GREEN & WHITE
OUTPUT
42
2ND DET.
75
I.F.
78
DET. OSCILLATOR
6A7
RECTIFIER
80
ANT.
GND.
I.F. 460 KC.
Philco Radio
INTERNAL CONNECTIONS
FILTER CONDENSER BANK
A 0.09 µf
B 0.09 µf
C 0.05 µf
D 0.5 µf

MODELS 70 AND 70-A

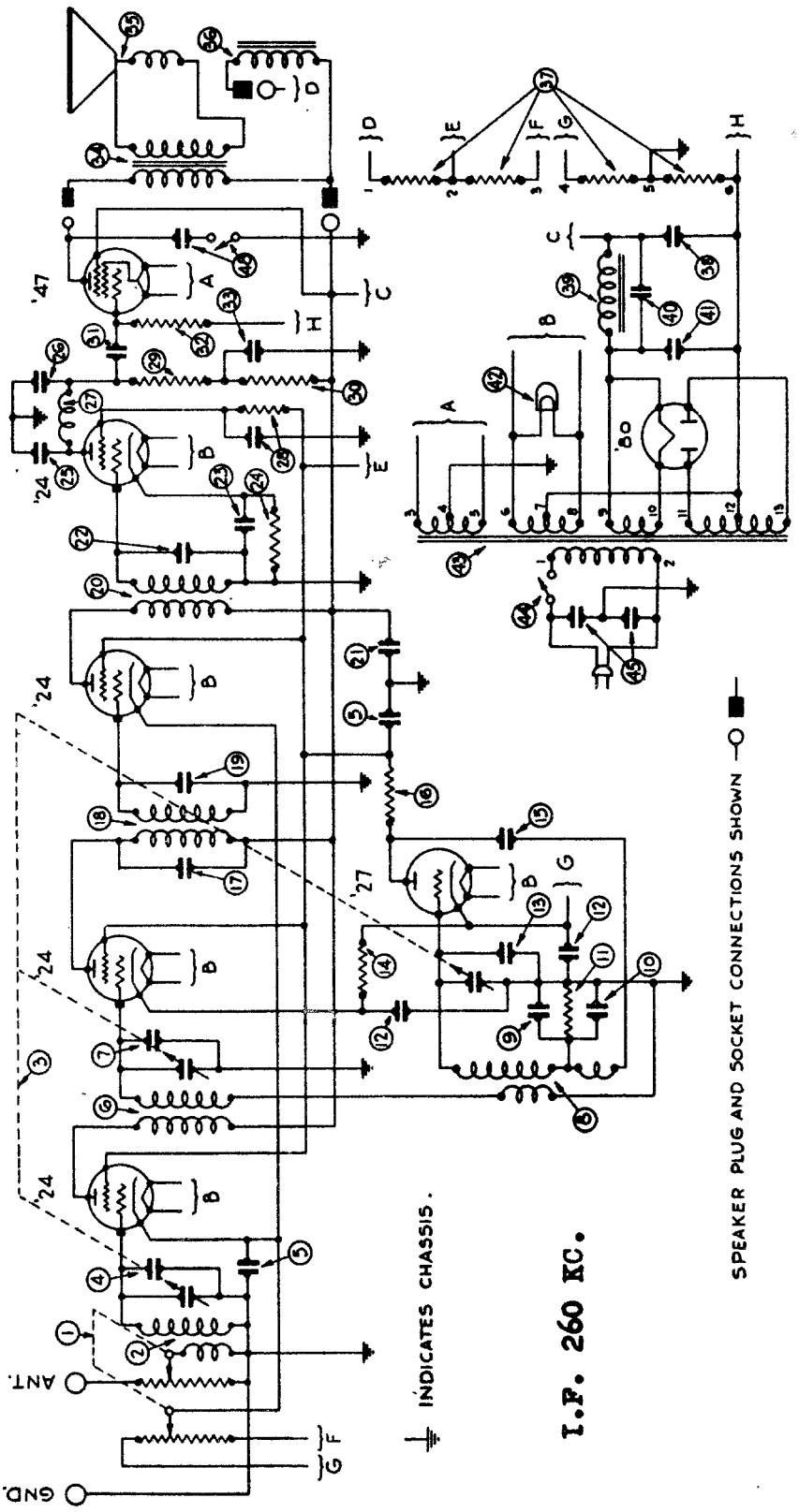

I.F. 260 KC.

Philco Radio

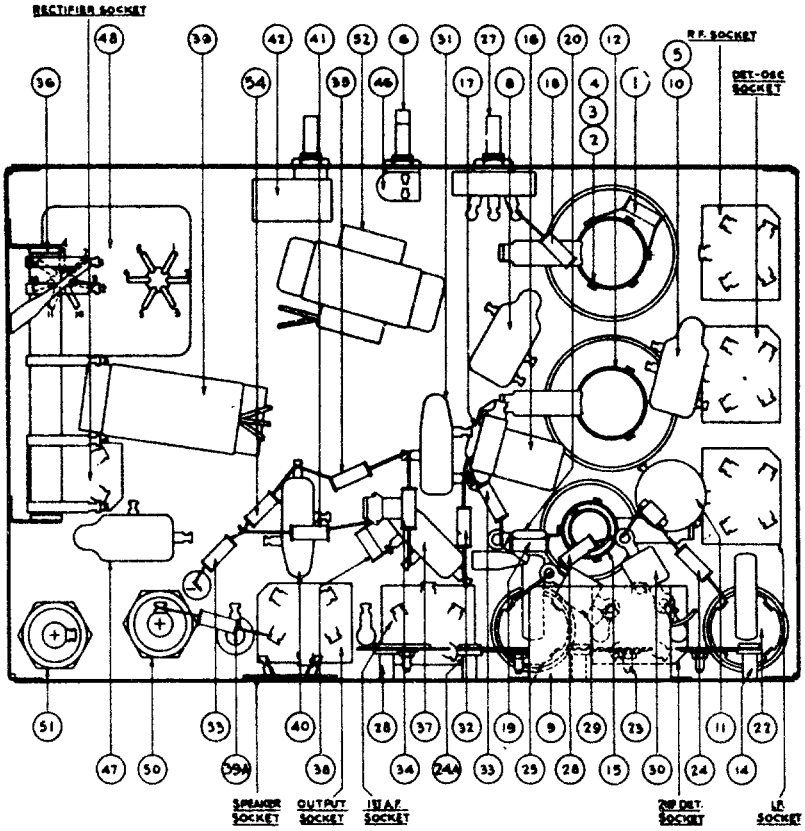

REPLACEMENT PARTS MODELS 70 AND 70-A

(Above Serial No. B-22,000)

No. on Figs. 3 and 4	Description	Part No.
1	Resistor (10,000 ohms)	4412
3, 8, 4	Antenna Coil	04339
6	Condenser (.05 mfd.) double	3615-AF
9	Tuning Condenser Assembly 50-60 cycles	04164
	Tuning Condenser Assembly 25-40 cycles	04165
7	Compensating Condenser — Antenna — (Part of Tuning Condenser Assembly)	
8	Condenser (.09 mfd. and 200 ohm Resistor)	4989-L
9	Condenser (.5 mfd.)	3583
10	Combined with 9	
11	R. F. Choke	04196
12	Interstage Coil	04185
13	Compensating Condenser — Detector — (Part of Tuning Condenser Assembly)	
14	Compensating Condenser—Coupling	04000-M
15	Oscillator Coil	04186
16	Compensating Condenser — Low Frequency	04000-F
17	Condenser (410 mmf.)	5120
18	Resistor (2,000,000 ohms)	5872
19	Resistor (10,000 ohms)	4412
19	Condenser (700 mmf.)	4520
21	Compensating Condenser - High Frequency—(part of Tuning Condenser Assembly)	
22	First I. F. Transformer	04190
23	Compensating Condenser—First I. F.	04000-M
24	Resistor (2,000,000 ohms)	5872
24A	Compensating Condenser 2nd I.F. Primary	04000-M
25	Second I. F. Transformer	03038
26	Resistor (99,000 ohms)	4411
27	Volume Control	6015
28	Compensating Condenser —Second I. F.	04000-M
29	Condenser (110 mmf.)	4519
29	Condenser (110 mmf.)	4519
30	Condenser (.01 mfd.)	3903-G
31	Resistor (4,000,000 ohms)	6010
32	Resistor (1,000,000 ohms)	4409
33	Resistor (70,000 ohms)	5385
34	Resistor (25,000 ohms)	4516
35	B. C. Resistor	04196
36	Condenser (.01 mfd.)	3903-T
37	Resistor (490,000 ohms)	4517
38	Filter Condenser Block (.05, .25, 1.5 mfd.)	04194
38A	Resistor (3,000 ohms)	5309
39	Condenser (.01 mfd.)	3903-U
40	Resistor (330,000 ohms) 50-60 cycles	6046
	Resistor (490,000 ohms) 25-40 cycles	4517
41	Tone Control	03637
42	Output Transformer	2673
43	Voice Coil & Cone Assembly	02996
44	Field Coil Assembled with Pot	02966
45	On-Off Switch	4095
46	Condenser (.015 mfd. Double)	3793-H
48	Power Transformer (50-60 cycles)	5117
	Power Transformer (25-40 cycles)	5118
	Power Transformer (50-60 cycles, 230 volts)	5119
49	Pilot Light	3463
50	Electrolytic Condenser (6 mfd.) 50-60 cycles	4916
	Electrolytic Condenser (14 mfd.) 25-40 cycles	5725
51	Electrolytic Condenser (6 mfd.) 50-60 cycles	4916
	Electrolytic Condenser (10 mfd.) 25-40 cycles	5142
52	Filter Choke	4819
53	Resistor (51,000 ohms)	4518
54	Resistor (490,000 ohms)	4517
	Tube Shield	04168
	Knob (Large)	03064
	Knob (Small)	03437
	Knob Spring	4147
	Grid Clip	4897
	Five Prong Socket Assembly	4956
	Four Prong Socket Assembly	4955
	Dial Complete	03031
	Bezel	5312
	Chassis Mounting Screw	W-468
	Mounting Washer	W-315
	Rubber Washer	5189

MODELS 70 AND 70-A

(A. V. C.)

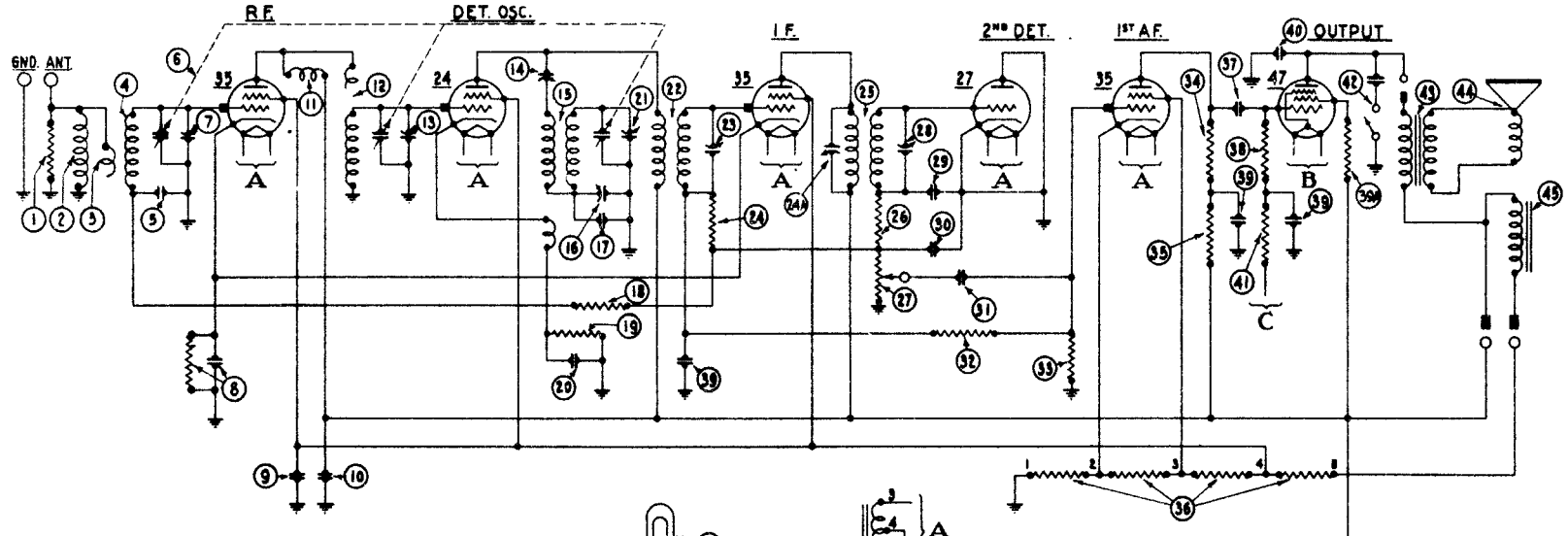

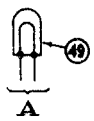

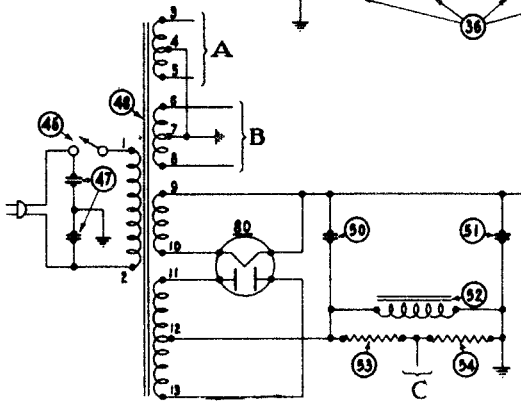

1. Volume Control
2. R. F. Transformer
3. Tuning Condenser (50-60 cycles) Tuning Condenser (25-40 cycles)
4. Compensating Condenser — Antenna—(Part of Gang Condenser Assembly)
4. Condenser (.09 mfd. Double)
5. Detector Transformer
7. Compensating Condenser — Detector—(Part of Gang Condenser Assembly)
8. Oscillator Coil
9. Condenser (410 mmf.)
10. Compensating Condenser—Low Frequency
11. Resistor (51,000 ohms)
12. Condenser (.09 mfd. Double)
13. Compensating Condenser—High Frequency — (Part of Gang Condenser Assembly)
14. Resistor (5,000 ohms)
15. Condenser (110 mmf.)
16. Resistor (13,000 ohms)
17. Compensating Condenser—1st I. F. Primary
18. First I. F. Transformer
19. Compensating Condenser—1st I. F. Secondary
20. Second I. F. Transformer
21. Condenser (.05 mfd.)
22. Compensating Condenser—2nd I. F. Secondary
23. Condenser (.5 mfd.)
24. Resistor (51,000 ohms)
24A. Condenser (500 mmf.)
25. Condenser (250 mmf.)
26. R. F. Choke
27. Condenser (.09 Combined with 250 ohm Resistor)
28. Resistor (240,000 ohms)
29. Resistor (45,000 ohms) 50-60 cycles
30. Resistor (99,000 ohms) 25-40 cycles
31. Condenser (.01 mfd.)
32. Resistor (240,000 ohms)
33. Condenser (.25 mfd.)
34. Output Transformer
35. Voice Coil and Cone Assembly
36. Field Coil (Assembled with Pot)
37. B. C. Resistor
38. Electrolytic Condenser (6 mfd.) 50-60 cycles
39. Choke
39A. Condenser (.09 mfd.) 50-60 cycles
40. Electrolytic Condenser (6 mfd.) 50-60 cycles
41. Pilot Light
42. Power Transformer (50-60 cycles)
43. "On-Off" Switch
44. Condenser (.015 mfd. Double)
45. Condenser (.01 mfd.)
46. Resistor (240,000 ohms)
47. Condenser (.25 mfd.)
48. Output Transformer
49. Voice Coil and Cone Assembly
50. Field Coil (Assembled with Pot)
51. B. C. Resistor
52. Electrolytic Condenser (6 mfd.) 50-60 cycles
53. Choke
54. Condenser (.09 mfd.) 50-60 cycles

I.F. 260 KC.

Philco Radio

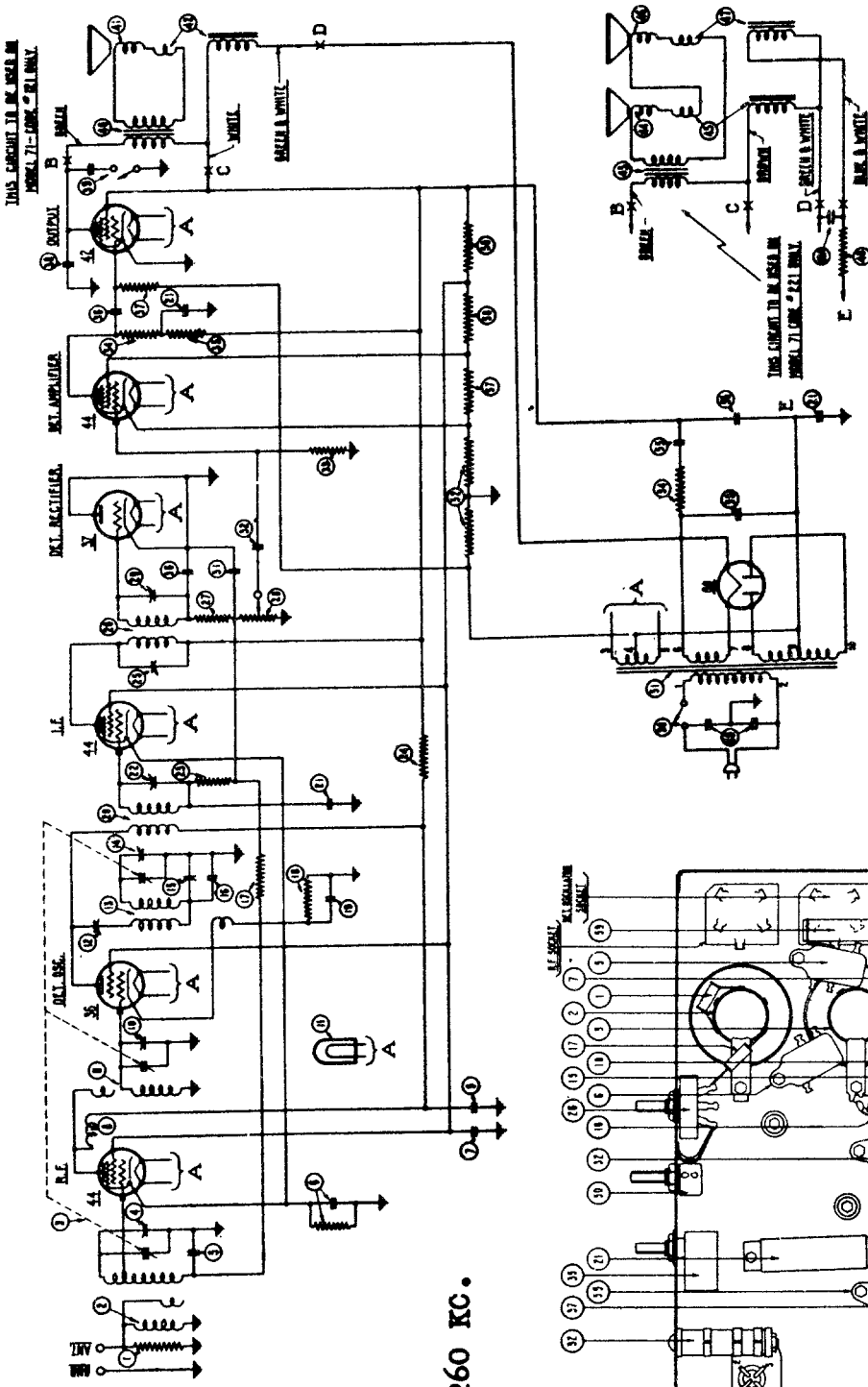

I.F. 260 KC.

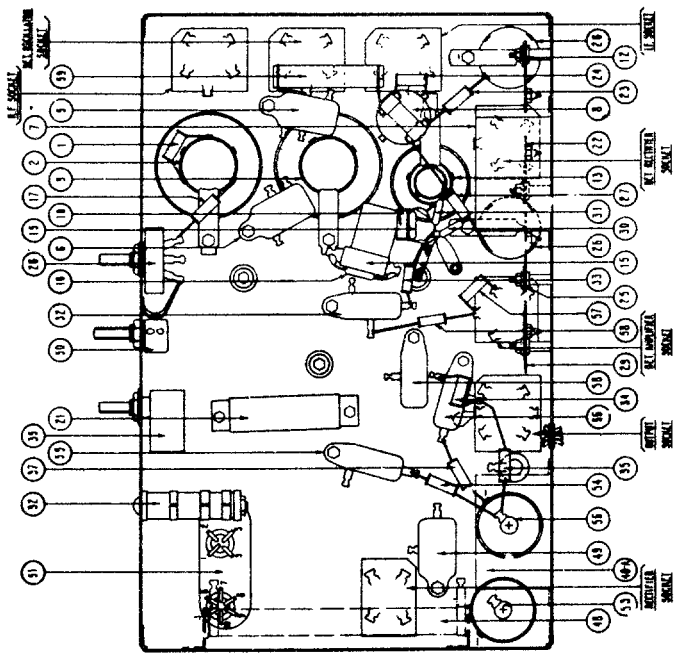

Model 71

Philco Radio

Replacement Parts for Model 71 Series

1	Resistor (10,000 ohms)	4412
2	R. F. Transformer	04339
3	Tuning Condenser (50-60 cycles)	04733
4	Tuning Condenser (25-40 cycles)	04734
5	Condenser (.05 Mfd. double)	3615-AF
6	Condenser (.09 Mfd. and 200 ohm resistor)	4989-L
7	Condenser (.5 Mfd.)	3583
8	R. F. Choke	04198
9	Detector Transformer	04185
10	Compensating Condenser—Detector—Part of tuning condenser assembly	
11	Pilot Light	6608
12	Compensating Condenser — 1st I. F. primary	04000-M
13	Oscillator Coil	04186
14	Compensating Condenser—High frequency—Part of tuning condenser assembly	
15	Compensating condenser—Low frequency	04000-F
16	Condenser (410 Mmf.) (Yellow and Orange)	5120
17	Resistor (1,000,000 ohms)	4409
18	Resistor (15,000 ohms)	6208
19	Condenser (700 Mmf.) (White and Yellow)	4520
20	First I. F. Transformer	04190
21	Filter Condenser Bank (2 —.05, .25 Mfd.)	04731
22	Compensating Condenser — 1st I. F. secondary	04000-M
23	Resistor (1,000,000 ohms)	4409
24	Resistor (1,000 ohms)	5837
25	Compensating Condenser—2nd I. F. primary	04000-M
26	Second I. F. Transformer	04319
27	Resistor (99,000 ohms)	4411
28	Volume Control	6499
29	Compensating Condenser—2nd I. F. secondary	04000-M
30	Condenser (110 Mmf.) (Blue and Golden Yellow)	4519
31	Condenser (110 Mmf.) (Blue and Golden Yellow)	4519
32	Condenser (.01 Mfd.)	3903-J
33	Resistor (1,000,000 ohms)	4409
34	Resistor (70,000 ohms)	5385
35	Resistor (25,000 ohms) Single Speaker	4516
	Resistor (51,000 ohms) Twin Speaker Models	4518
36	Condenser (.01 Mfd.)	3903-N
37	Resistor (490,000 ohms)	4517
38	Condenser (.01 Mfd.)	3903-AA
39	Tone Control	04757
40	Output Transformer — single speaker models	2580
40	Voice Coil and Cone assembly	02823
40	Speaker Field and Bucking Coil assembled with pot—(K-7) single speaker models	02761
40	Output Transformer — Twin speaker models	2564
40	Voice Coil and cone assembly	02823
40	Speaker Field and Bucking Coil assembled with pot—(K-10) Twin speaker models	02767
40	Voice coil and cone assembly	02823
41	Speaker field assembled with pot —(K-9) Twin speaker models	02762
42	Resistor (5620 ohms) wire wound —Twin speaker models	6451
43A	Condenser (.25 Mfd.) Twin Speaker Models	04997
43	Condenser (.015 Mfd. Double)	3793-H
44	On-off Switch	6498
45	Power Transformer—50-60 cycles—single speaker	6454
	Power Transformer—25-40 cycles—single speaker	6455
	Power Transformer—50-60 cycles—230 volts—single speaker	6456
	Power Transformer—50-60 cycles—twin speaker	6457
	Power Transformer—25-40 cycles—twin speaker	6458
	Power Transformer—50-60 cycles—230 volts—twin speaker	6459
46	Resistor—wire wound (245 ohms and 185 ohms)	6452
47	Electrolytic Condenser (6 Mfd.) (50-60 cycles) single speaker	6453
	8 Mfd. Twin speaker	6707
48	Resistor (10,000 ohms)	4412
49	Condenser (.05 Mfd.)	3615-G
50	Electrolytic Condenser (6 Mfd.) (50-60 cycles) single speaker	4916
	8 Mfd. Twin speaker	6706
51	Resistor (5,000 ohms)	5310
52	Resistor (5,000 ohms)	5310
53	Resistor (13,000 ohms)	6450
	Tube Shield (small)	5387
	Tube Shield (large)	04735

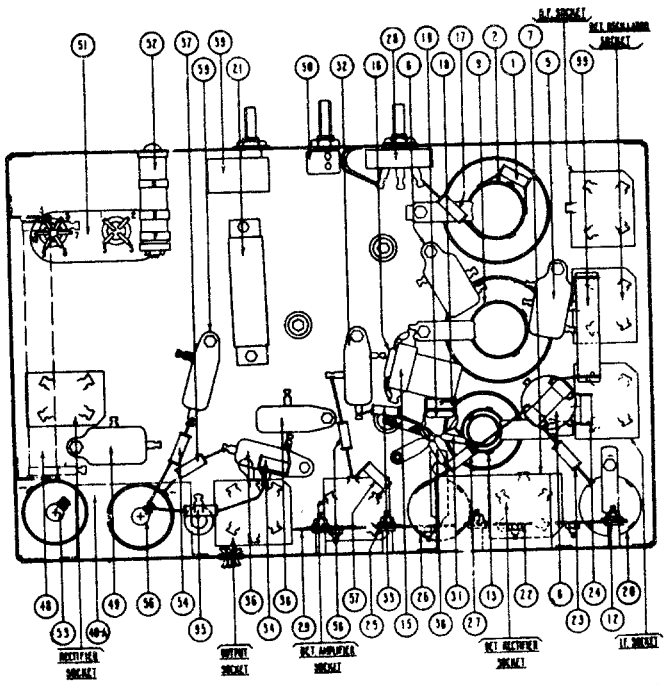

Philco Radio

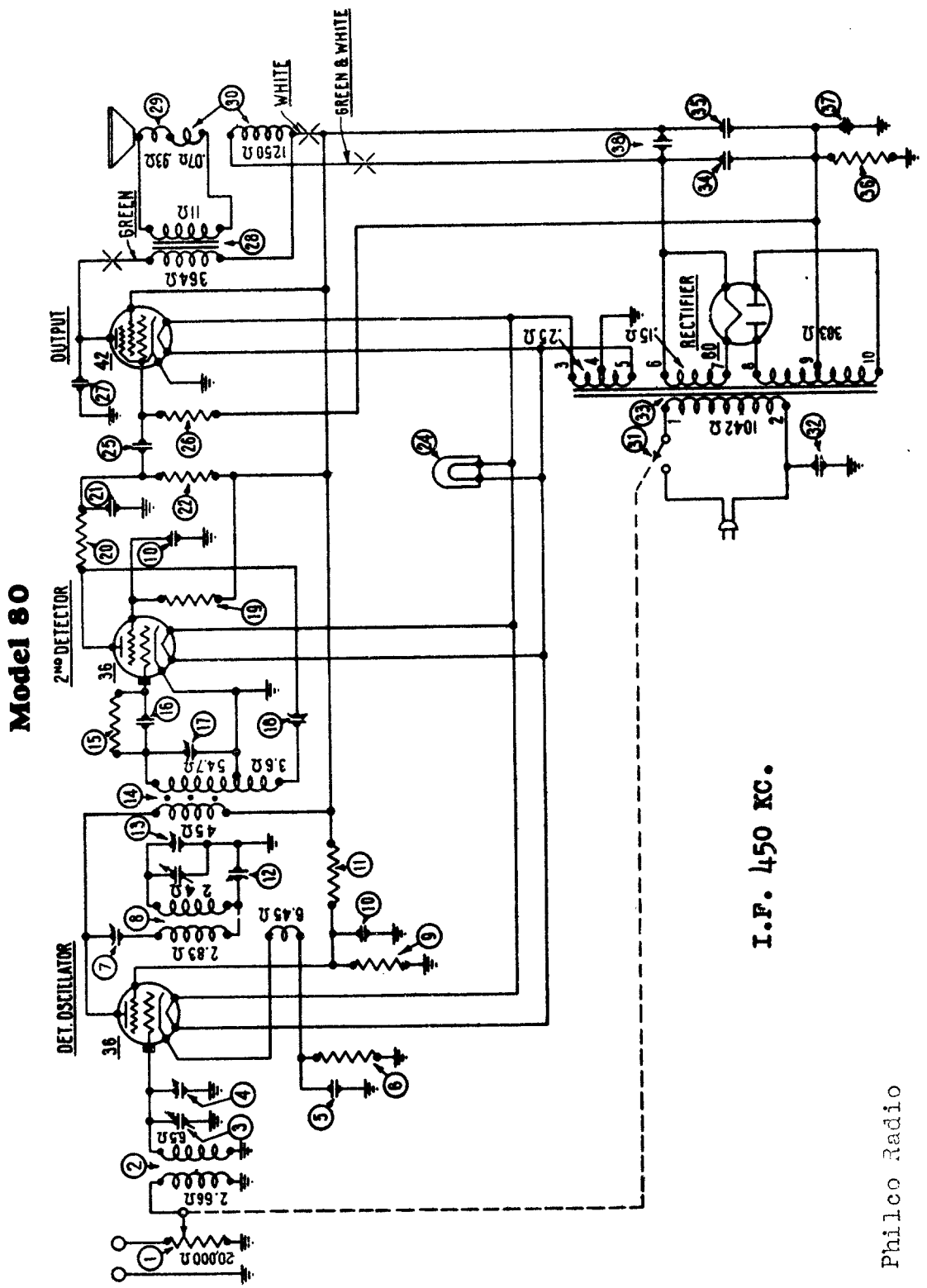

Philco Radio

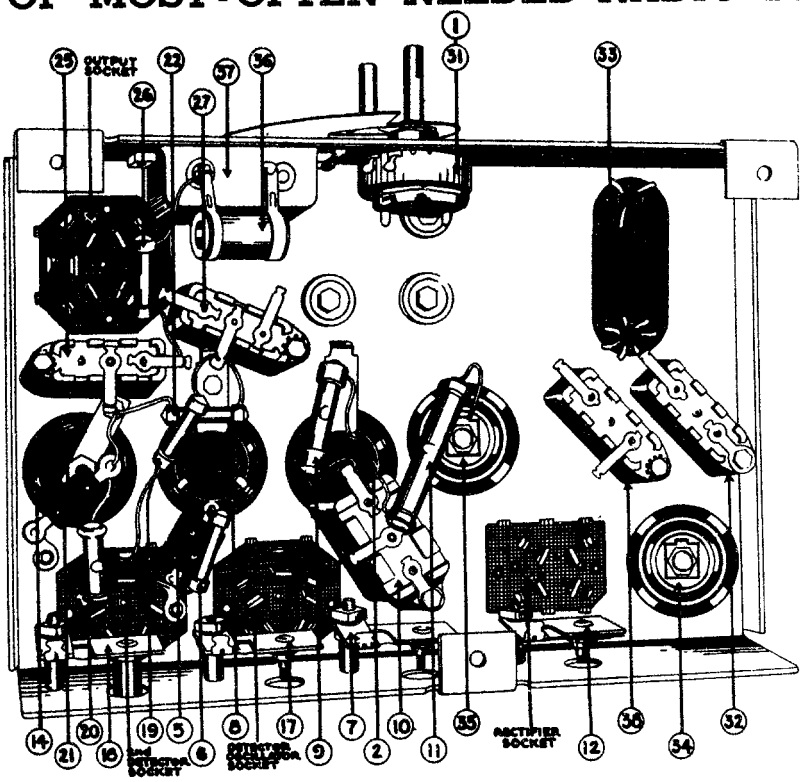

REPLACEMENT PARTS MODEL 80

No. on Figs. 2 and 3	Description	Part No.
1	Volume Control—Combined with On-Off Switch	7439
2	Antenna Transformer	05831
3	Tuning Condenser Assembly	05794
4	Compensating Condenser — Antenna — Part of Tuning Con. Assembly	
5	Condenser (710 Mmf.) White and Yellow	4520
6	Resistor (10,000 Ohms)	4412
7	Compensating Condenser—I.F. Primary	04000-A
8	Oscillator Coil	05832
9	Resistor (9,000 Ohms)	7501
10	Condenser (.09 Twin)	4989-B
11	Resistor (16,000 Ohms)	7500
12	Compensating Condenser — Low Frequency	04000-S
13	Compensating Condenser — High Frequency — Part of Tuning Con. Assembly	
14	I.F. Transformer	05834
15	Resistor (4,000,000 Ohms) Mounted on I.F. Transformer	6010
16	Condenser (50 Mmf.) White—Mounted on I.F. Transformer	3774
17	Compensating Condenser—I.F. Secondary	04000-D
18	Compensating Condenser	04000
19	Resistor (1,000,000 Ohms)	4409*
20	Resistor (10,000 Ohms)	4412
21	Condenser (1,000 Mmf.) Green and White	5215
22	Resistor (240,000 Ohms)	4410
24	Pilot Light	6608
25	Condenser (.015 Mfd.)	3793-B
26	Resistor (490,000 Ohms)	4517*
27	Condenser (.006 Mfd.)	7625-B*
28	Output Transformer	2660
29	Voice Coil and Cone Assembly	02861
30	Speaker Field and Bucking Coil Assembled with Pot	02677*
31	On-Off Switch—Combined with Volume Control	7439
32	Condenser (.01 Mfd.)	3903-AH*
33	Power Transformer 50-60 Cycles	7421
	Power Transformer 25-40 Cycles	7422
	Power Transformer 50-60 Cycles, 230 Volts	7423
34	Electrolytic Condenser (8.0 Mfd.)	6707
35	Electrolytic Condenser (4.0 Mfd.)	7467
36	Resistor (325 Ohms) Wire Wound	7465*
37	Electrolytic Condenser—Dry—(10 Mfd.)	7440*
38	Condenser (.01 Mfd.)	3903-AJ*
	Bezel	7417
	Dial Complete	05828
	Tube Shield	7172
	Knob (Large)	03063
	Knob (Small)	03064
	Knob Spring	5262
	Grid Clip	4897
	Four Prong Socket Assembly	5026
	Five Prong Socket Assembly	4956
	Six Prong Socket Assembly	6417
	Chassis Mounting Screw	W-567
	Chassis Mounting Washer	W-315
	Rubber Washer	5189
	Pilot Lamp Shield	5760

* A number of circuit changes were made on chassis of run No. 5 and above. This run number is rubber stamped in a star on the back of the chassis. Refering to Figs. 2 and 3, the condenser 27 connects to the B- end of resistor 26 instead of to ground. The bucking coil - that section of 29 in series with the voice coil - is shorted out. The 10 mfd. dry electrolytic condenser 37 is eliminated, and replaced with a substitute .015 section combined with 25, part 3793R. The .01 mfd. condenser 38 is eliminated. The positions of 19 24 and 20 are changed in the chassis from that shown in Fig. 3.

MODEL 84

Philco Radio

Note 1. Condenser (32) used in early production only.

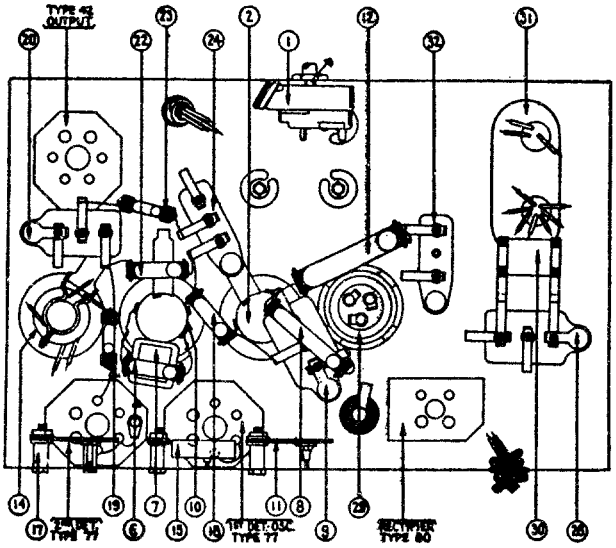

I. F. 460 K. C.

COMPILED BY M. N. BEITMAN, SUPREME PUBLICATIONS

Model 86 and 82

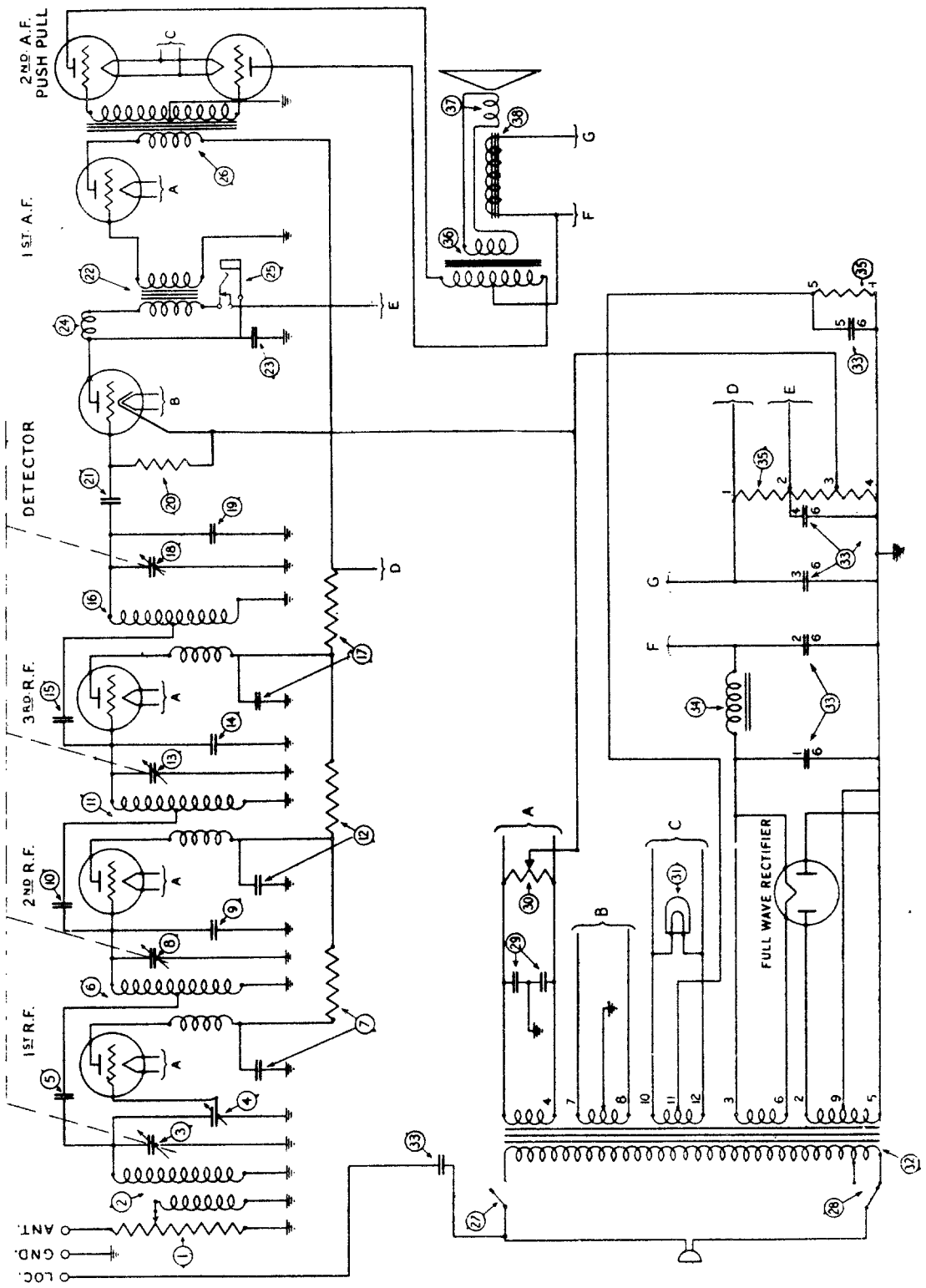

Replacement Parts for Model 86

	Part Name	Part No.
1	Volume Control	3076
2	R. F. Transformer (Antenna Tuning)	3075-B
3 - 8 - 12 - 18	Tuning Condenser (complete with drum and scale)	3001-B
4	Range Control	3133
9 - 10 - 15	Neutralizing Condenser	3025-A
6 - 11 - 16	R. F. Transformer	3075-A
7 - 13 - 17	By-Pass Condenser (.1 mfd. with Plate Resistor Winding)	3292-A
9 - 14 - 19	Compensating Condensers	3282-A
20	Grid Leak	3083
21	Grid Condenser	3082
22	Audio Transformer	3241
23	By-Pass Condenser (.001 mfd.)	3081
24	Detector R. F. Choke	3256-A
25	Phonograph Pick-Up Jack	3087
26	Push-Pull Input Transformer	3242
27	Power-Toggle Switch	3253
28	Primary Tap Switch	3116
29	Filament By-Pass Condenser (2 sections .5 mfd.)	3080
30	6-Ohm Hum Adjuster	3096
31	Pilot Lamp	3105
32	Power Transformer (60 cycle)	3271
33	Filter Condenser Block (60 cycle)	3246
34	Filter Choke Coil	3269
35	B-C Section Resistor	3232
36	Push-Pull Output Transformer	2897
	Speaker Plug	2871-A
37	Speaker Cone and Voice Coil	2898
38	Speaker Field Coil	2896
	Cable Spring	3012
	Control Knob Tuning Condenser	3035-A
	Control Knob (Volume and Range Control)	3036-A
	226 Tube Socket	3051-A
	Condenser Drive Cable	3054-A
	Knob Spring	3103
	Fibre Adjusting Wrench	3164
	280 Tube Socket	3169-A
	171 Tube Socket	3170-A
	Pilot Lamp Socket Assembly	3202-A
	Jack Insulator Nut	3231
	Terminal Panel Assembly	3236-A
	Speaker Socket	3247-A
	227 Tube Socket, Spring Type	3263-A
	Jack Insulator	3272
	A.C. Attachment Cord and Plug	L-943-A
	Wiring Cable	L-1037
	Speaker Cable	L-1039
	Socket Wrench for Speaker Mounting Bolts	3312

***Note:*—When ordering replacements for 25-cycle Receivers (Model 82) use the following part numbers instead of those given above. All other part numbers remain the same.**

32	Power Transformer (25 cycle)	3278
33	Filter Condenser Block (25 cycle)	3279

Replacement Parts for Model 87

	Part Name	Part No.
1	Volume Control	3076
2	R. F. Transformer (Antenna Tuning)	3075-B
3 - 8 - 12 - 18	Tuning Condenser (Complete with Drum and Scale)	3001-B
4	Range Control	3133
9 - 10 - 15	Neutralizing Condenser	3441-A
6 - 11 - 16	R. F. Transformer	3075-A
7 - 13 - 17	By-Pass Condenser (.1 mfd. with Plate Resistor Winding)	3292-A
9 - 14 - 19	Compensating Condensers	3435-A
20	Grid Leak	3083
21	Grid Condenser	3082
22	Audio Transformer	3241
23	By-Pass Condenser (.001 mfd.)	3081
24	Detector R. F. Choke	3256-A
25	Push-Pull Input Transformer	3242
26	Power Toggle Switch	3501
27	Filament By-Pass Condenser (2 Sections .5 mfd.)	3080
28	6-Ohm Hum Adjustor	3096
29	Pilot Lamp	3463
30	Power Transformer	3400
31	Filter Condenser Block	3401
32	Filter Choke Coil (First)	3422
33	Filter Choke Coil (Second)	3472
34	Detector Resistor	3542
35	B-C Resistor	3399
36	Push-Pull Output Transformer	2848
37	Speaker Cone and Voice Coil	2844-A
38	Speaker Field Coil	2850
	Speaker Plug	2871-A
	Cable Spring	3012
	Control Knob Tuning Condenser	3301
	Control Knob (Volume and Range Control)	3300
	Condenser Drive Cable	3484
	Knob Spring	3305
	Fibre Adjusting Wrench	3164
	4-Hole Tube Socket	3423-A
	Pilot Lamp Socket Assembly	3202-A
	Terminal Panel Assembly	3236-A
	Speaker Socket	3464-A
	5-Hole Tube Socket	3442-A
	A.C. Attachment Cord and Plug	L-943-A
	Speaker Cable	L-1056-A
	Socket Wrench for Speaker Mounting Bolts	3312
	Tuning Scale	3398
	Oscillator Kit	3540
	Wood Switch Plug	3627

Model 87

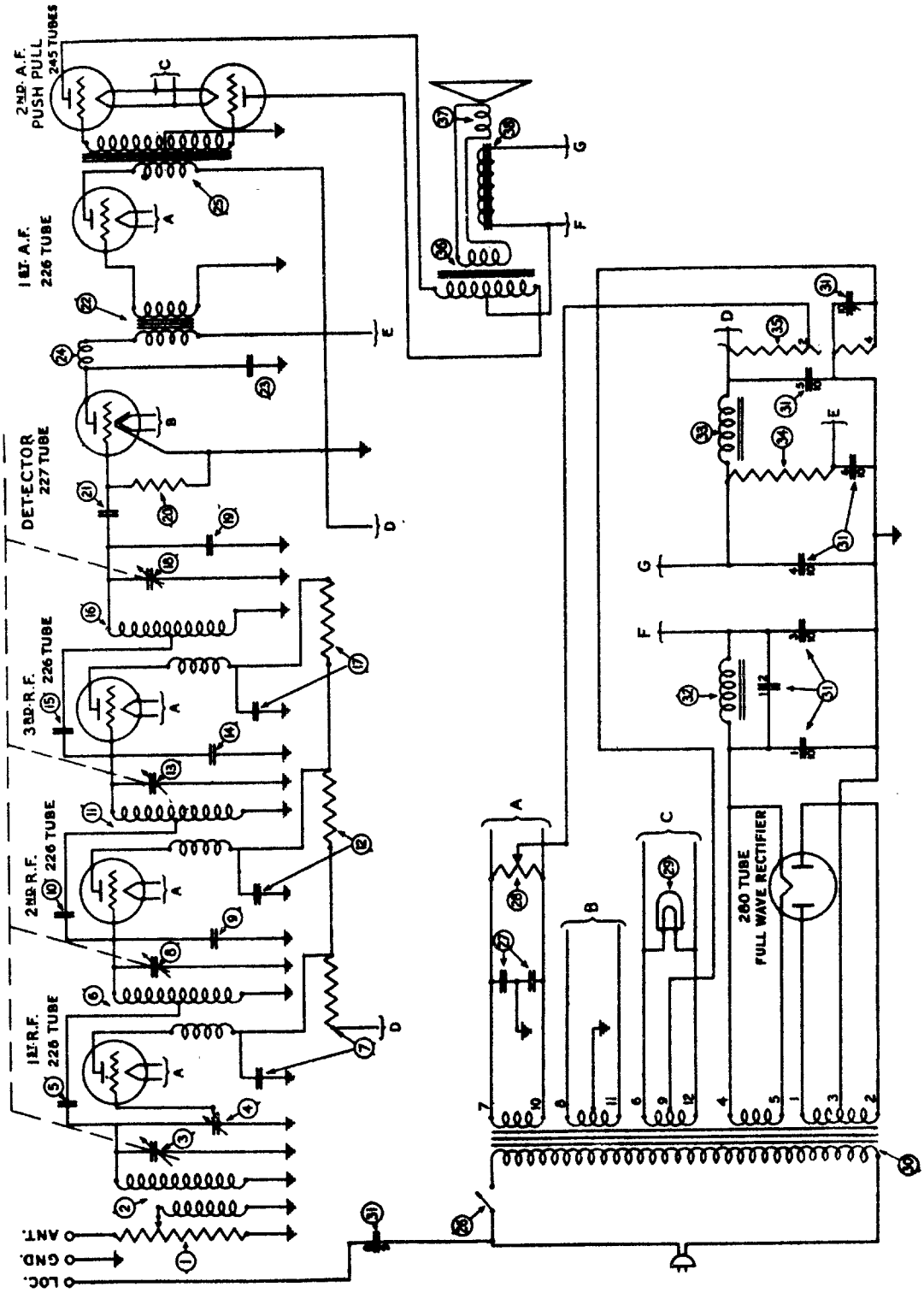
2ND A.F.
PUSH PULL
245 TUBES
1ST A.F.
226 TUBE
DET-ECTOR
227 TUBE
3RD R.F.
226 TUBE
2ND R.F.
226 TUBE
1ST R.F.
226 TUBE
280 TUBE
FULL WAVE RECTIFIER
ANT.
GND.
LOC.

PHILCO Model 89 (123)

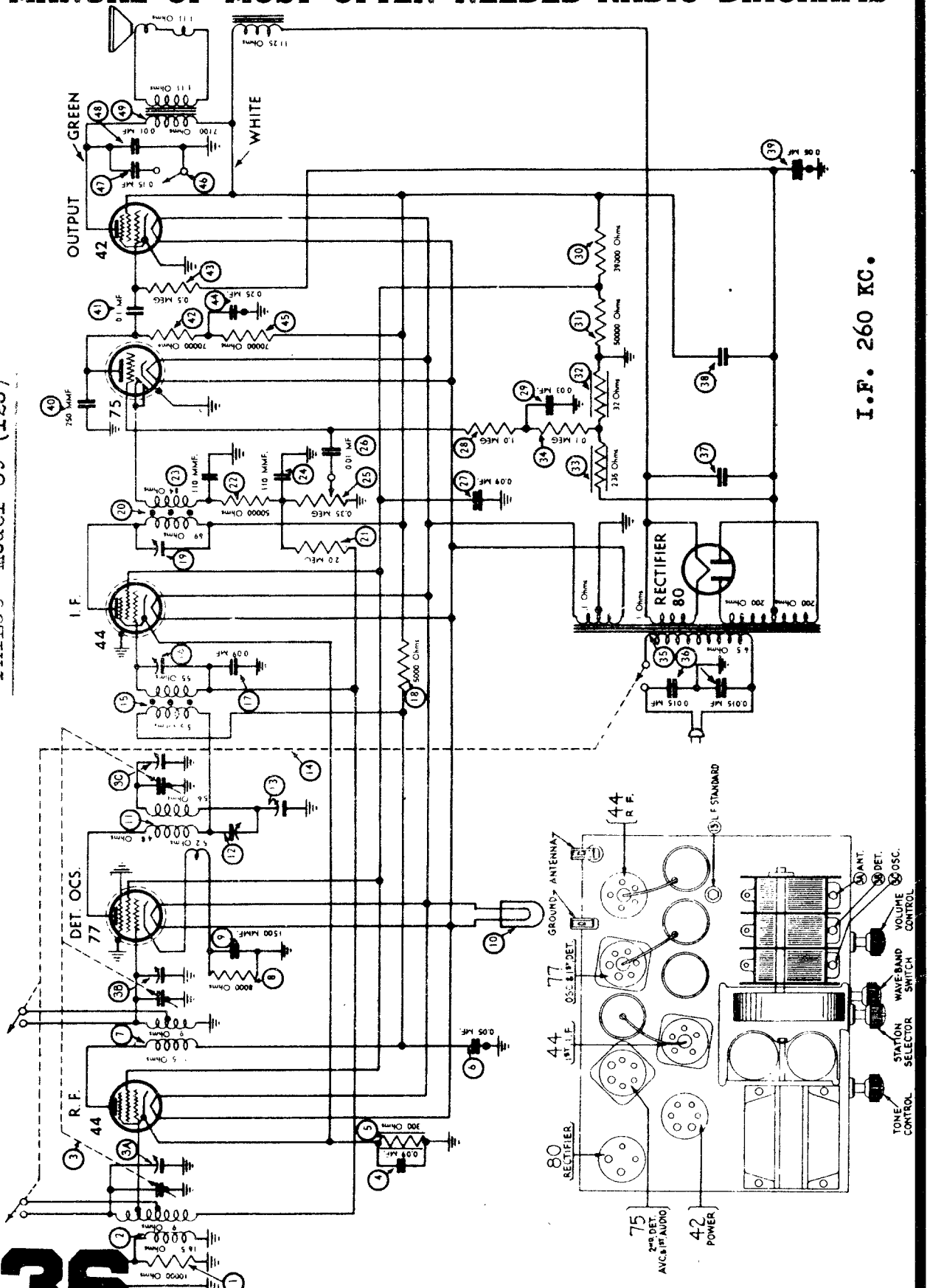

COMPILED BY M. N. BEITMAN, SUPREME PUBLICATIONS

Models 90 and 90-A

WITH 2- TYPE 45 TUBES

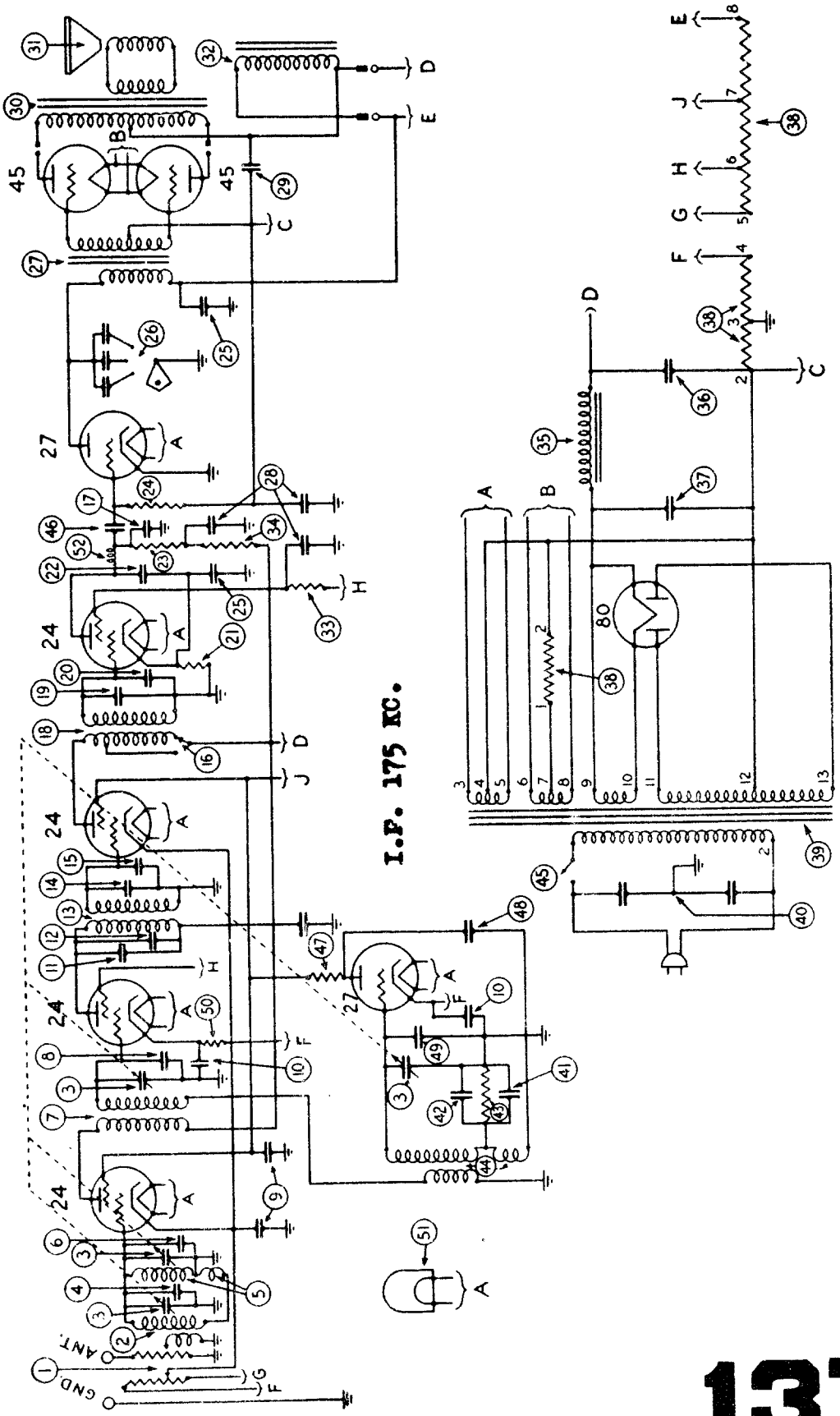

MANUAL OF MOST-OFTEN-NEEDED RADIO DIAGRAMS

Models 90 and 90-A

WITH 2- TYPE 45 TUBES

No. on Figs. 3 and 4	Description	Part No.
1	Volume Control	5039
2	1st R. F. Transformer	03013
3	Gang Condenser—50 to 60 cycles	03001
	Gang Condenser—25 to 40 cycles	03078
4	Compensating Condenser (Part of Tuning Condenser Assembly)	
5	2nd R. F. Transformer	03014
6	Compensating Condenser (Part of Tuning Condenser Assembly)	
7	1st Det. Transformer	03015
8	Compensating Condenser (Part of Tuning Condenser Assembly)	
9	Condenser .09 M. F. (Double)	4989-C
9a	Condenser .09 M. F. (Double)	4989-B
11	Fixed Condenser .00011 } Assembled	3772-C
12	Compensating Condenser }	
13	1st I. F. Transformer	03009
14	Compensating Condenser } Assembled	03051
15	Fixed Condenser .00011 }	
16	Normal Maximum Switch	3116
17	Condenser (.000035 mf)	4990
18	2nd I. F. Transformer	03143
19	Compensating Condenser } Assembled	03051
20	Fixed Condenser .00011 }	
21	Resistor—50,000 Ohms	4518
22	Condenser .00035	4990
23	Resistor—250,000 Ohms	4410
24	Resistor—1,000,000 Ohms	4409
25	Condenser .5 M. F. (Double)	03024
26	Tone Control	4037-A
27	1st Audio Transformer	4952
28	Condensers 2—.25 M. F. and 1—.5 M. F.	03029
29	Condenser .05 M. F.	3615-G
30	Output Transformer:	
	H_1 (For Large Cone Assembly)	2848
	K_1 (For Small Cone Assembly)	2766
31	Voice Coil Assembly and Cone:	
	H_2 (Large Cone)	02997
	K_2 (Small Cone)	02996
32	Speaker Field—Assembled with Pot and Frame	
33	Resistor—250,000 Ohms	3766
34	Resistor—250,000 Ohms	4410
35	Filter Choke	4951
36	Condenser 6 M. F. Electrolytic Type (50-60 cycles)	4916
	Condenser 10 M. F. Electrolytic Type (25-40 cycles)	5142
36	Condenser 6 M. F. Electrolytic Type (25-40) and (50-60) cycles	4916
37	B. C. Resistor	4953
38	Power Transformer (50 to 60 cycles)	4938
	Power Transformer (25 to 40 cycles)	4956

No. on Figs. 3 and 4	Description	Part No.
39	Condenser .015 M. F. (Double)	3793-E
40	Condenser .0007 M. F. } Assembled	03050
40	Compensating Condenser }	
41	Resistor—50,000 Ohms	4237
42	Oscillator Coil	03016
43	On-Off Switch	4095
44	Condenser .001 M. F.	5215
45	Resistor—13,000 Ohms	3766
46	Condenser .00011 M. F.	4519
46	Compensating Condenser (Part of Tuning Condenser Assembly)	
47	Resistor—5,000 Ohms	3826
48	Pilot Bulb	3463
49	R. F. Choke	03086
	Line Cord and Plug	L-943
	Tube Shield	03002
	Knob (large) Dial Control	4956-A
	Spring (Dial Knobs)	4147
	Knobs (small) Tone and Volume Control	4959-A
	Knob (switch)	4290-A
	Grid Clip	4897
	Speaker Plug and Cable	L-1134-A
	Grommet for R. F. Transformer Shield	3747
	Rectifier Tube Socket	5026
	Four Prong Socket Assembly	4955
	Five Prong Socket Assembly	4956
	Speaker Socket	4957
	Volume Control Insulator	4092
	Volume Control Insulator	4286
	Fahnstock Clip	L-1126
	Finishing Rosettes	4267
	Speaker Mounting Screws (8 used)	W-493
	Speaker Mounting Screws (1 used)	W-483
	Dial	5021
	Mica for Gang Condenser Compensating Condenser	3473
	Insulating Washer for Compensating Condenser	3500
	Tuning Condenser Mounting Washer	3614
	Tuning Condenser Mounting Washer	3915
	Tuning Condenser Mounting Sleeve	3916
	Spring for Tuning Condenser	4255
	Bezel	5009
	Complete Pilot Bracket	03081-A
	Dial Disc	4926
	Light Shield Screen	4937
	Friction Drive Bracket	4966
	Brass Collar for Friction Drive	4966
	Shaft	4951

REPLACEMENT PARTS—MODELS 90 and 90-A RECEIVERS

(Above Serial No. 237,001)

No. on Figs. 3 and 4	Description	Part No.
1	Resistor (10,000 ohms)	4412
2	First R. F. Transformer	03360
3	Gang Condenser (50-60 cycles)	03001
	Gang Condenser (25-40 cycles)	03078
4	Compensating Condenser (part of gang condenser assembly)	
5	Second R. F. Transformer	03014
6	Compensating Condenser (part of gang condenser assembly)	
7	First Detector Transformer	03015
8	Compensating Condenser (part of gang condenser assembly)	
9	Compensating Condenser (First I. F. Primary)	03315
10	First I. F. Transformer	03009
11	Compensating Condenser (First I. F. Secondary)	03315
12	Compensating Condenser (Second I. F. Primary)	03317
13	Second I. F. Transformer	03345
14	Condenser (110 mmf.)	4519
15	Resistor (51,000 ohms)	4518
16	Resistor (51,000 ohms)	4518
17	Resistor (99,000 ohms)	4411
18	By-Pass Condenser (.01 mfd.)	3903-M
19	Condenser (.00025 mfd.)	8032
20	Volume Control	5366
21	Resistor (51,000 ohms)	4518
22	Resistor (70,000 ohms)	5385
23	By-Pass Condenser (.01 mfd.)	3903-M
24	Condenser (1-.1 mfd., 1-.13 mfd., 2-.25 mfd.)	03325
25	Resistor (240,000 ohms)	4410
26	Resistor (36,000 ohms)	3656
27	Resistor (35,000 ohms)	3656
28	By-Pass Condenser (.01 mfd.)	3993-P
29	Resistor (340,000 ohms)	4410
30	Condenser (.25 mfd., 1 mfd.)	03327
31	Tone Control	4037-A
32	Output Transformer	2673
33	Voice Coil Assembly and Cone:	
	H_2 (Large Cone)	02997
	K_2 (Small Cone)	02996
34	Speaker Field (Assembled with pot and frame)	
35	By-Pass Condenser (.05 mfd.)	3615-W
36	Resistor (490,000 ohms)	4517
37	Oscillator Coil	03016
38	By-Pass Condenser (.09 mfd.) double	4989-G
39	Compensating Condenser } Assembled	03050
39	Condenser (.0007 mfd.) }	
41	Resistor (51,000 ohms)	4518
42	Resistor (5,000 ohms)	5310
43	Compensating Condenser (part of tuning condenser assembly)	
44	Condenser (110 mmf.)	4519
45	Resistor (51,000 ohms)	4237
46	By-Pass Condenser (.05 mfd.)	3615-U
47	By-Pass Condenser (.05 mfd.)	3615-E
48	Resistor (490,000 ohms)	4517
49	Resistor (70,000 ohms)	5385
50	Resistor (25,000 ohms)	4516
51	Resistor (240,000 ohms)	3768
52	Condenser (.015 mfd.) double	3793-E
53	On-Off Switch	4095
54	Power Transformer (50-60 cycles)	5362
	Power Transformer (25-40 cycles)	5363
	Power Transformer (50-60 cycles, 220 volts)	5364
55	Choke	4951
56	Condenser (6 mfd.) Electrolytic type (50-60 cycles)	4916
	Condenser (10 mfd.) Electrolytic type (25-40 cycles)	5142
56	Condenser (6 mfd.) Electrolytic type (50-60 cycles)	4916
	Condenser (10 mfd.) Electrolytic type (25-40 cycles)	5142
57	B. C. Resistor	5365
	Line Cord and Plug	L-943
	Tube Shield (Large)	03373

COMPILED BY M. N. BEITMAN, SUPREME PUBLICATIONS

Models 90 and 90-A

ABOVE SERIAL NO. 237,001
WITH 1- TYPE 47 TUBE

Philco Radio

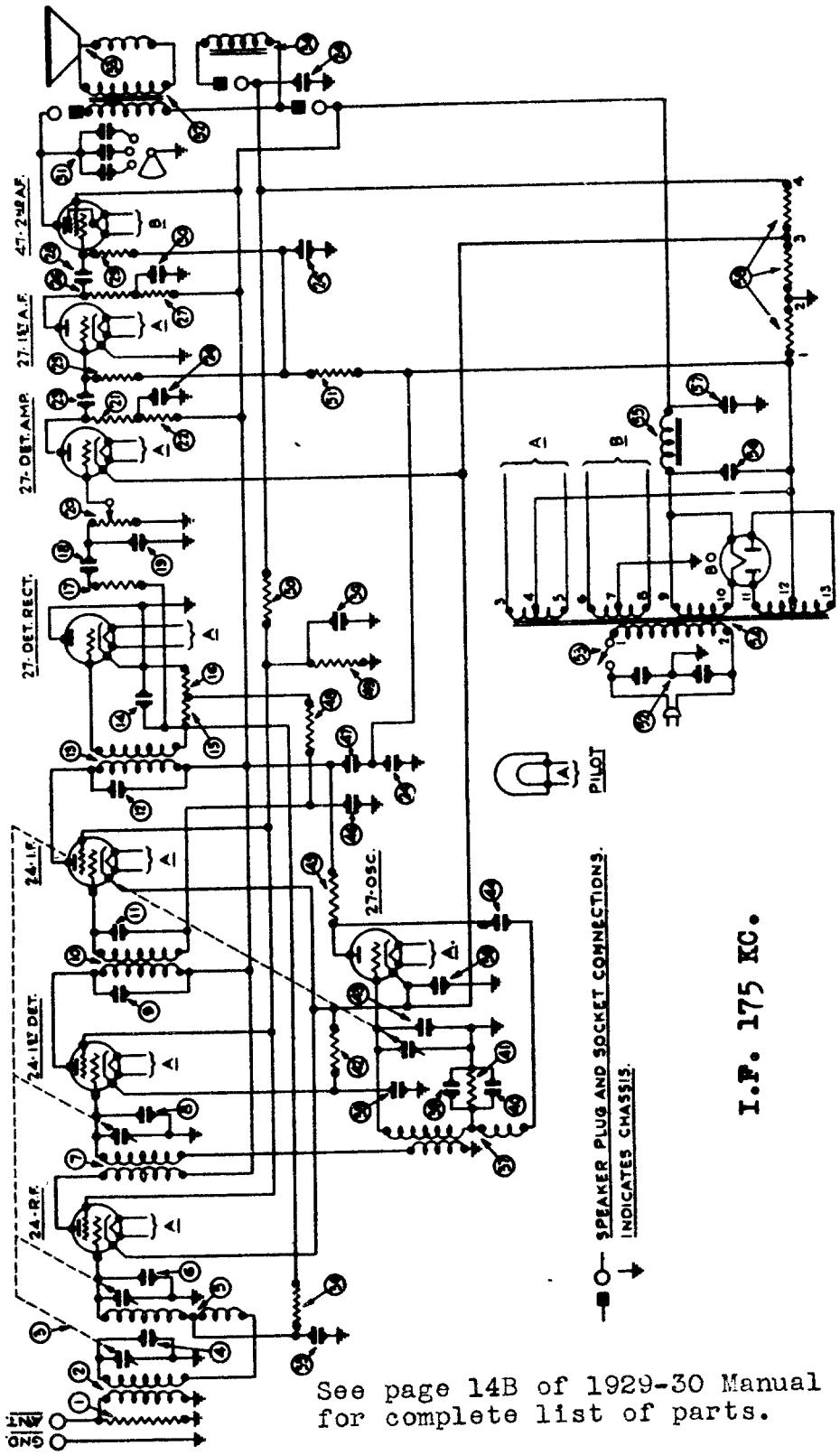

See page 14B of 1929-30 Manual for complete list of parts.

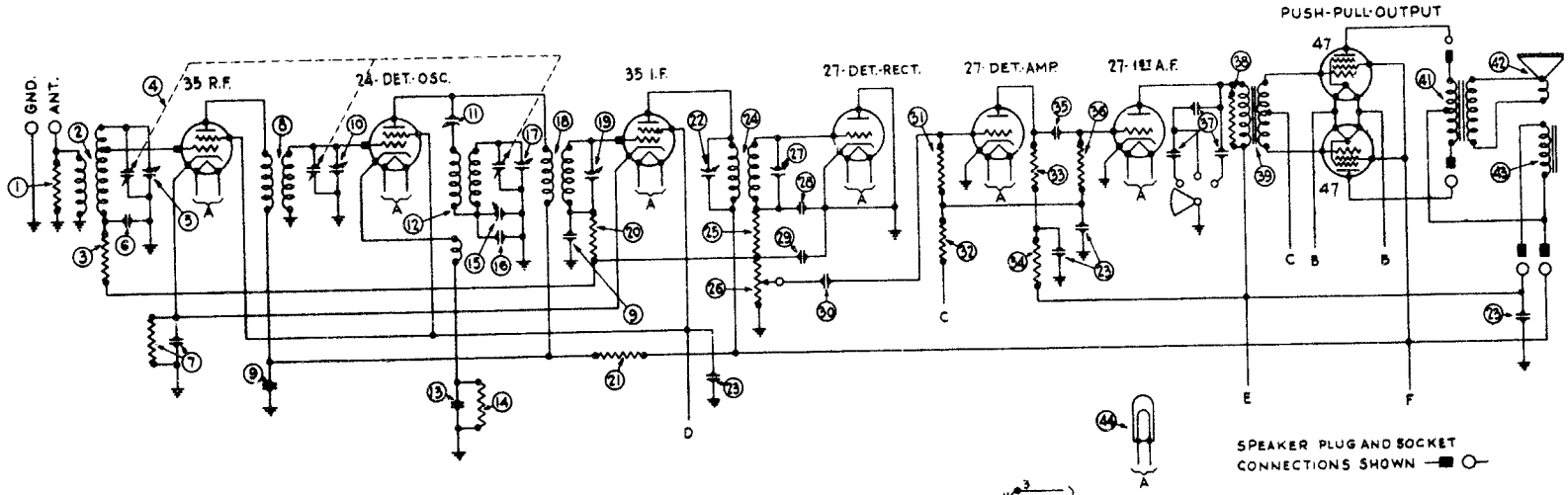

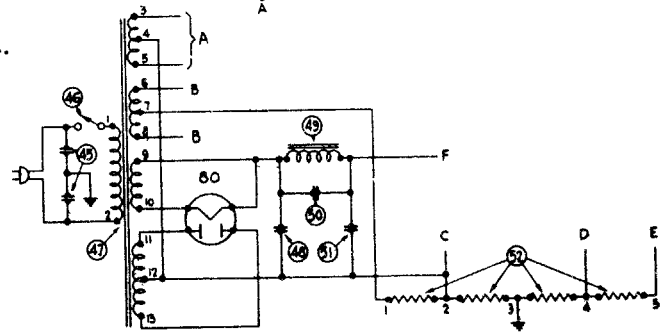

No. on Figs. 1 and 2	Description	Part No.
1	Resistor (10,000 Ohms)	4412
2	Antenna Transformer	04317
3	Resistor (1,000,000 Ohms)	4409
4	Tuning Condenser (50–60 cycles)	04309
	Tuning Condenser (25–40 cycles)	04310
5	Compensating Condenser — Antenna — Part of Tuning Condenser Assembly	
6	Condenser (.05 Mfd.)	3615-L
7	Condenser (.09 Mfd. and 200 Ohm Resistor)	4989-L
8	Detector Transformer	04408
9	Condenser (.09 Mfd.)	3615-AJ
10	Compensating Condenser — Detector — Part of Tuning Condenser Assembly	
11	Compensating Condenser—Coupling	04000-M
12	Oscillator Coil	04409
13	Condenser (700 Mmf.)	4520
14	Resistor (15,000 Ohms)	6208
15	Compensating Condenser—Low Frequency	04000-B
16	Condenser (410 Mfd.)	5120
17	Resistor (1,000,000 Ohms)	4409
18	Resistor (1,000 Ohms)	4590
19	Compensating Condenser—Second I.F. Primary	04000-M
20	Condenser (2–.25, 2–.5 Mfd.)	04407
21	Second I.F. Transformer	04320
22	Resistor (99,000 Ohms)	4411
23	Volume Control	6015

No. on Figs. 1 and 2	Description	Part No.
24	Condenser (110 Mmf.)	4519
25	Condenser (110 Mmf.)	4519
26	Condenser (.01 Mfd.)	3903-N
27	Resistor (1,000,000 Ohms)	4517
28	Resistor (490,000 Ohms)	4516
29	Resistor (25,000 Ohms)	4409
30	Resistor (25,000 Ohms)	4409
31	Condenser (.01 Mfd.)	3903-X
32	Resistor (1,000,000 Ohms)	4409
33	Tone Control	03137
34	Resistor (51,000 Ohms)	4518
35	Push-Pull Input Transformer	6064
36	Condenser (1,000 Mmf.) *	5215
37	Push-Pull Output Transformer	2635
38	Voice Coil and Cone Assembly	02874
39	Speaker Field Assembled with Pot	02892
40	Pilot Light	3468
41	Condenser (.015 Mfd. Double)	3793-E
42	On-Off Switch	4095
43	Power Transformer (50–60 cycles)	6072
	Power Transformer (25–40 cycles)	6073
	Power Transformer (50–60 cycles, 220 volts)	6074
44	Electrolytic Condenser (6 Mfd.) 50–60 cycles	4916
45	Filter Choke	4819
46	Condenser (.15 Mfd.)	6287-B
47	Condenser (6 Mfd.)	4916
48	B. C. Resistor	6071

I.F. 260 KC.

Philco Radio

MODEL 90

WITH 2- TYPE 47 TUBES

SERIAL No. 32,001 TO B35,000

AND ABOVE B53,100

COMPILED BY M. N. BEITMAN, SUPREME PUBLICATIONS

MODEL 96

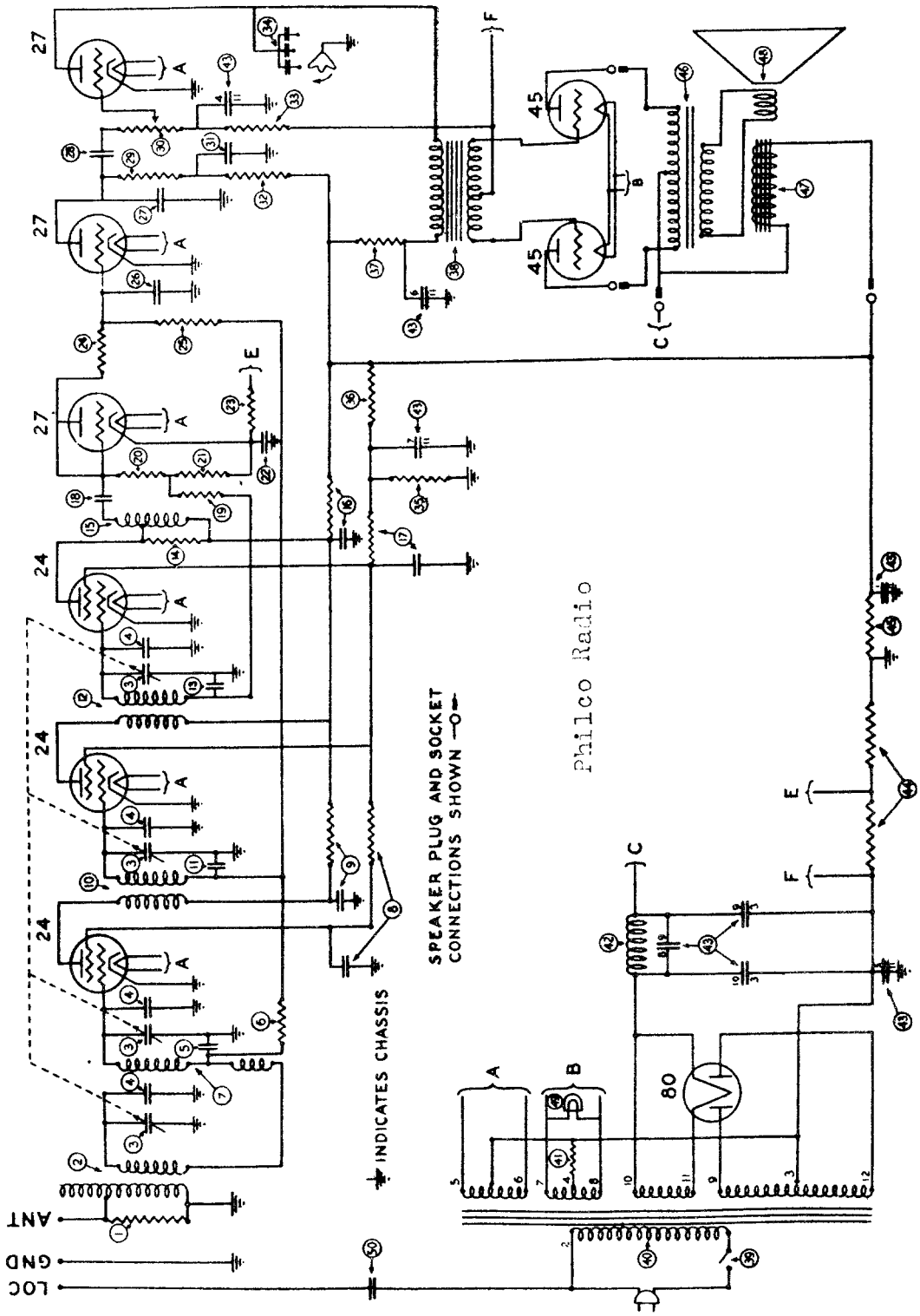
Philco Radio
SPEAKER PLUG AND SOCKET CONNECTIONS SHOWN
INDICATES CHASSIS
ANT
GND
LOC
27
24
45
80

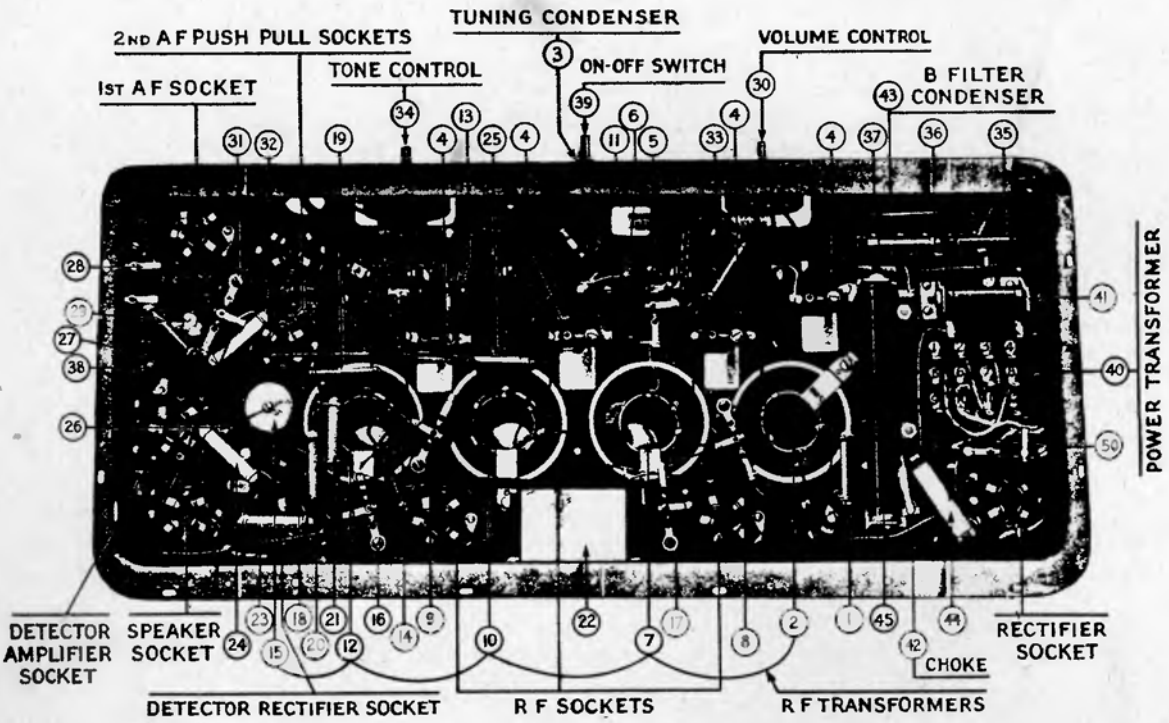

Replacement Parts for Model 96

No.	Description	Part No.
1	Antenna Resistor	3526
2	First R. F. Transformer	3744-A
3	Tuning Condenser	4000-D
4	Compensating Condenser	3772-A
5	By-Pass Condenser	3615-F
6	Resistor	3542
7	Second R. F. Transformer	3744-B
8	By-Pass Condenser and Resistor	3615-C
9	By-Pass Condenser and Resistor	3615-B
10	Third R. F. Transformer	3744-C
11	By-Pass Condenser	3615-E
12	Fourth R. F. Transformer	3744-C
13	By-Pass Condenser	3615-E
14	Resistor	3766
15	Fifth R. F. Transformer	3775-B
16	By-Pass Condenser and Resistor	3615-B
17	By-Pass Condenser and Resistor	3615-C
18	Condenser	3774
19	Resistor	3769
20	Resistor	3767
21	Resistor	3767
22	By-Pass Condenser	3583
23	Resistor	3767
24	Resistor	3768
25	Resistor	3769
26	By-Pass Condenser	3082
27	By-Pass Condenser	3082
28	Condenser	3793-C
29	Resistor	3769

No	Description	Part No.
30	Volume Control	4093
31	By-Pass Condenser	3615-D
32	Resistor	3768
33	Resistor	3542
34	Tone Control	4037-A
35	Resistor	3542
36	Resistor	3766
37	Resistor	3656
38	Input Transformer	3537
39	On-Off Switch	4095
40	Power Transformer (60 Cycle)	3752
40	Power Transformer (25 Cycle)	3753
41	C Resistor	3763
42	Choke	3422
43	Filter Condenser (60 Cycle)	3754
43	Filter Condenser (25 Cycle)	3755
44	Resistor	3764
45	B Resistor	3762
46	Out-Put Transformer	2848
47	Field Coil	2850
48	Voice Coil and Cone	2794-B
49	Pilot Lamp	3463
50	Condenser (LOC)	3793-B
	Knob (Vol. Control)	3579
	Knob (Tuning Condenser)	3580
	Dial Indicator	4006
	Scale	4118
	Speaker Plug and Cable (Short)	L-1101-A
	Speaker Plug and Cable (Long)	L-1102-A

NOTE: The first two Compensating Condensers 4 are 3772-A; the third and fourth Condensers are 3968-A.

MODEL 118

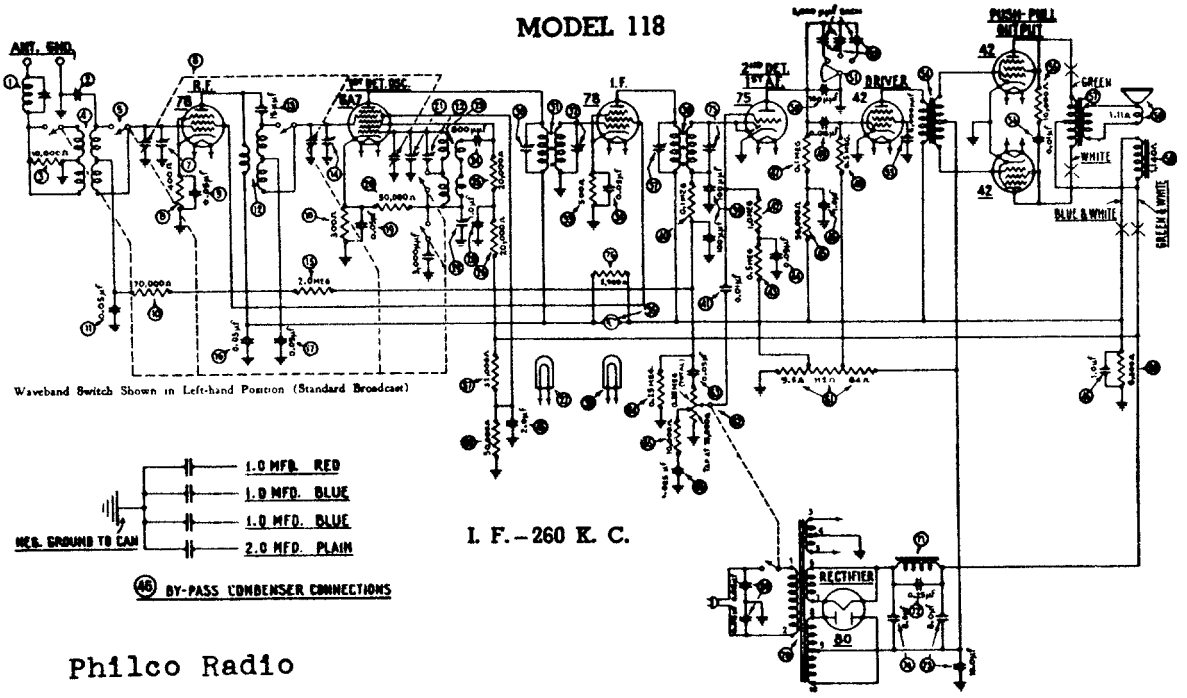

Philco Radio

MODEL 610

(Later Production)

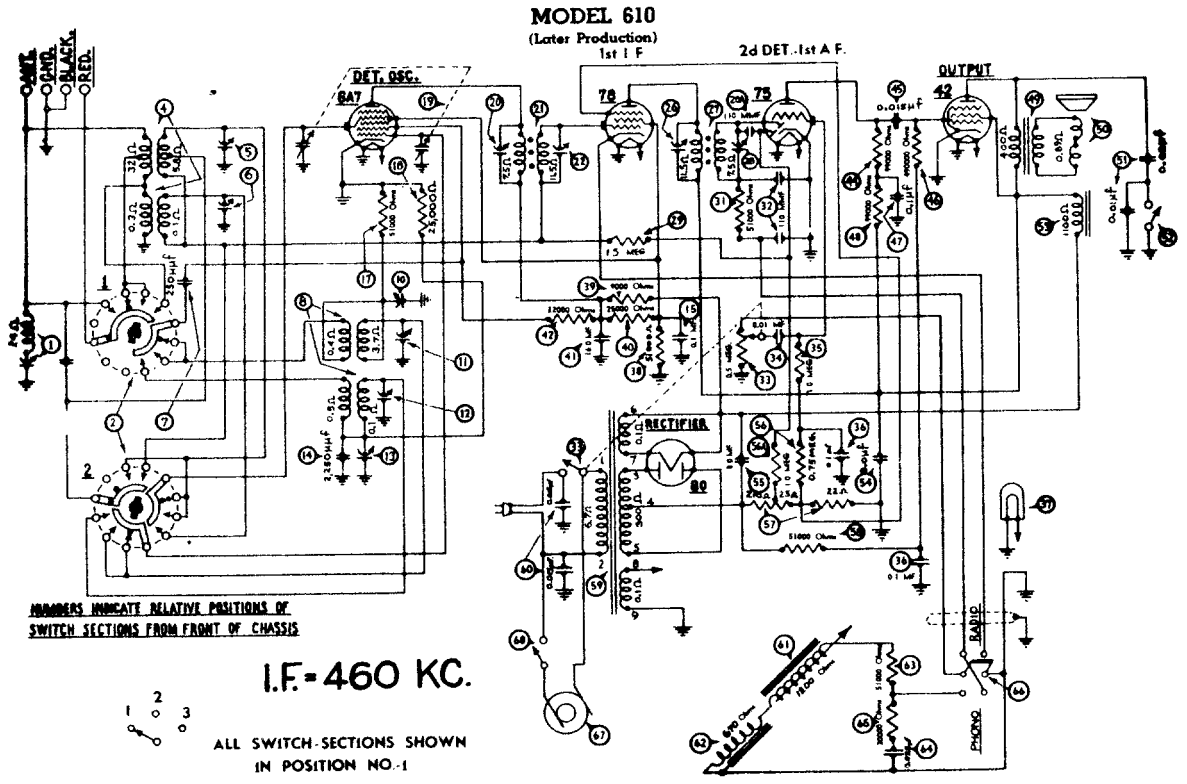

Philco Radio

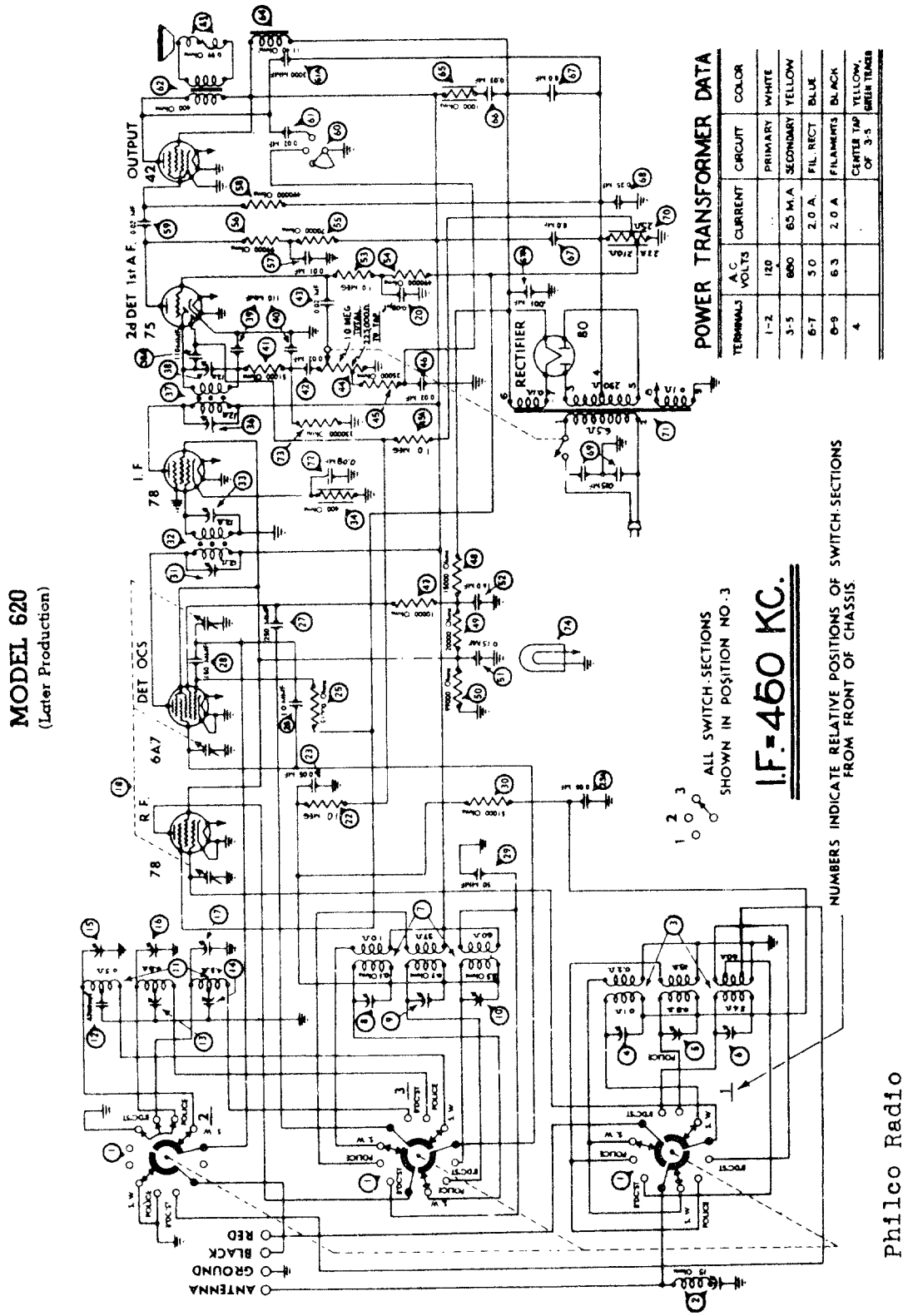

Philco Radio

MODEL 623
(Battery Operated)

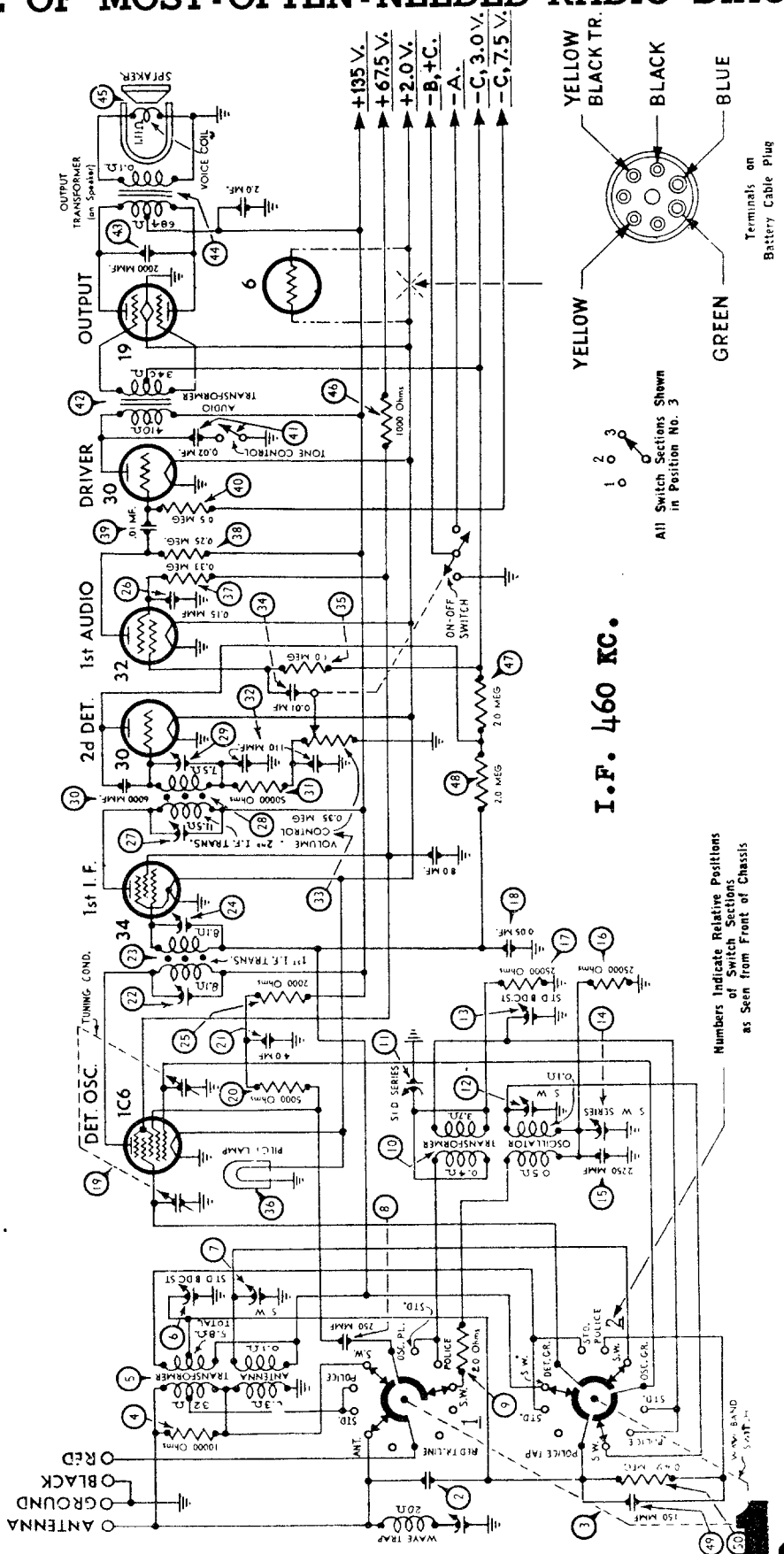

Philco Radio

MODEL 650

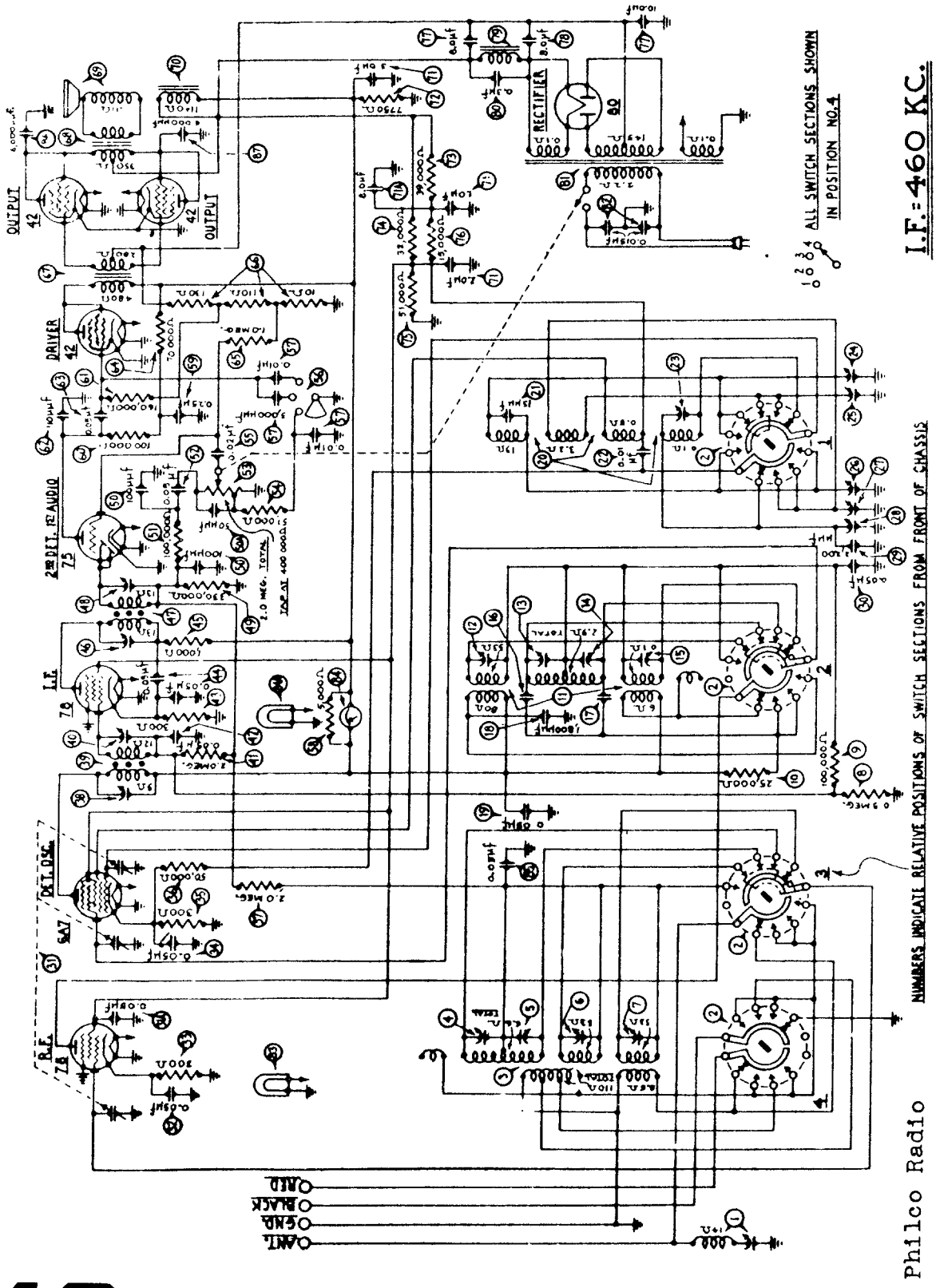

Philco Radio

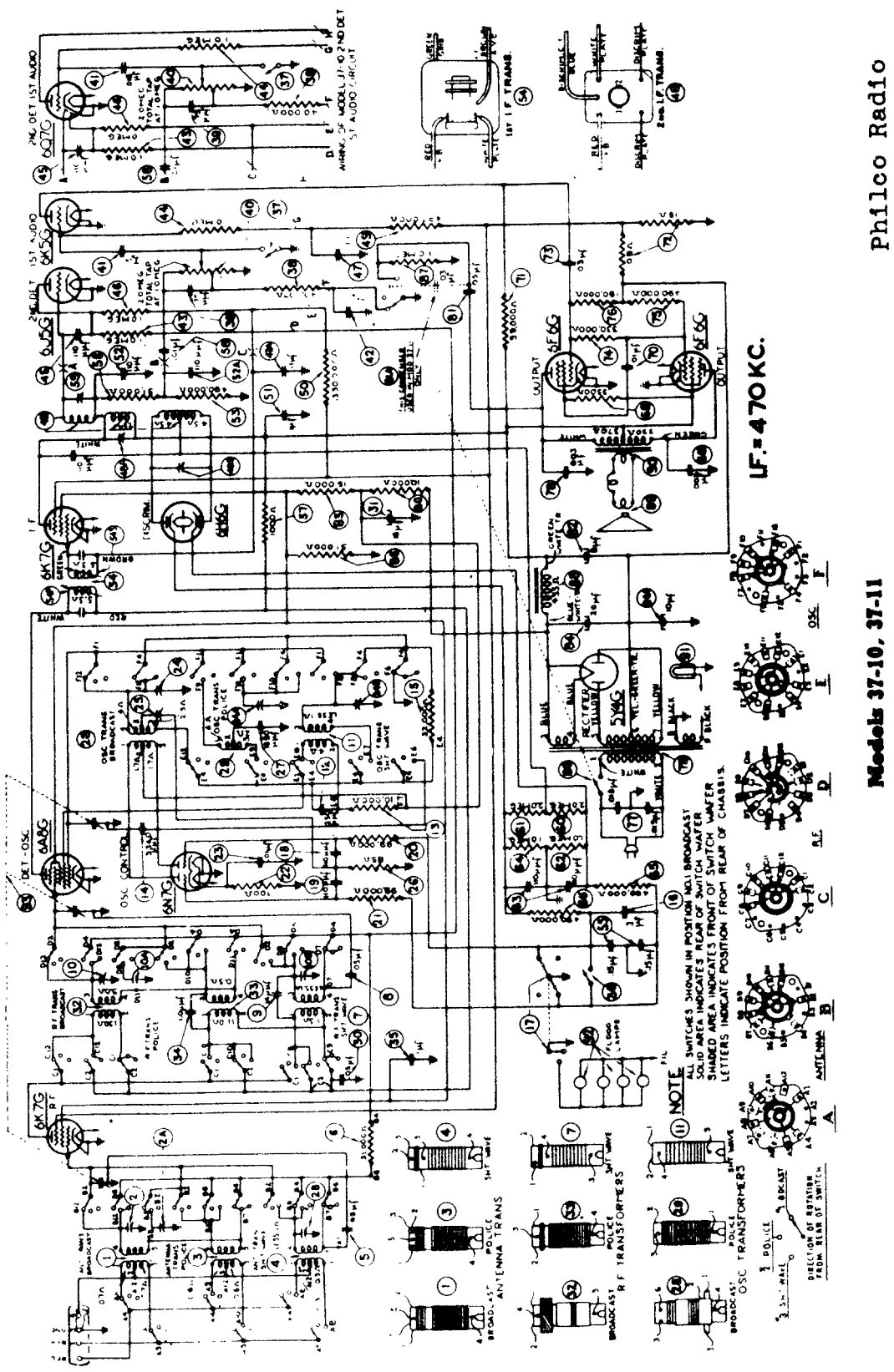
Philco Radio
Models 37-10, 37-11
I.F.=470 KC.
NOTE
ALL SWITCHES SHOWN IN POSITION NO.1 BROADCAST
SOLID AREA INDICATES REAR OF SWITCH WAFER
SHADED AREA INDICATES FRONT OF SWITCH WAFER
LETTERS INDICATE POSITION FROM REAR OF CHASSIS.
ANTENNA TRANS
RF TRANSFORMERS
OSC TRANSFORMERS
DIRECTION OF ROTATION FROM REAR OF SWITCH

PHILCO *Model 37-33*

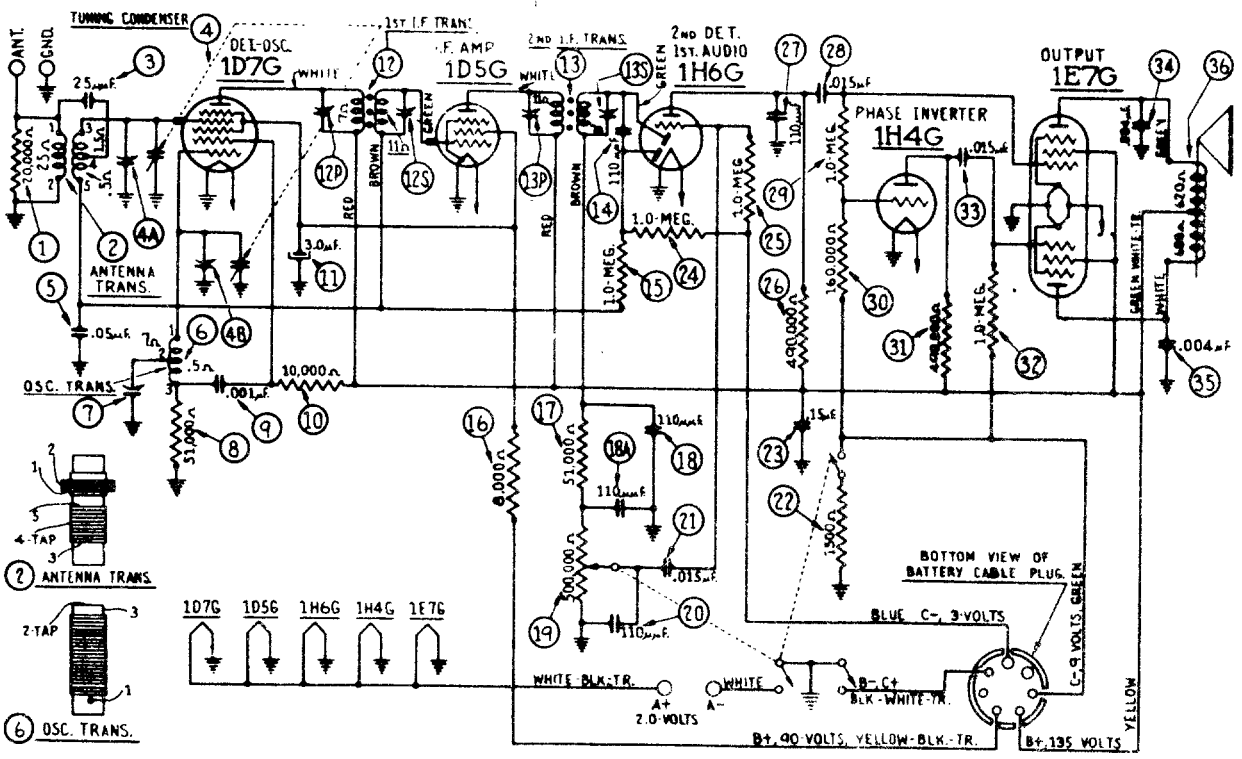

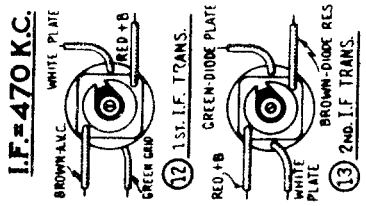

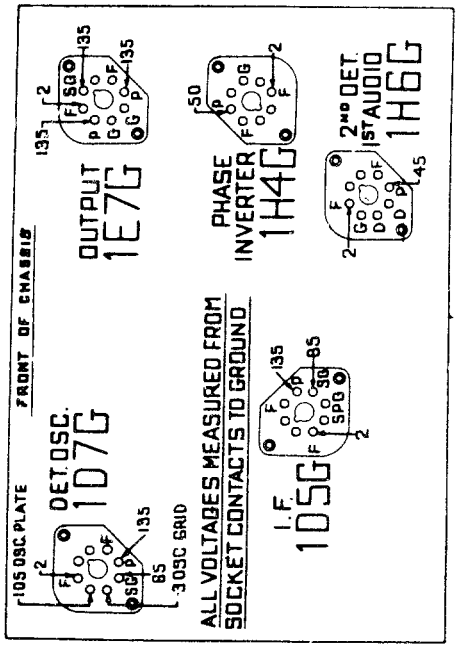

View of Sockets from Underside Chassis

The voltages indicated by arrows were measured with a Philco 25 Circuit Tester which contains a voltmeter having a resistance of 1000 ohms per volt. Volume Control at minimum.

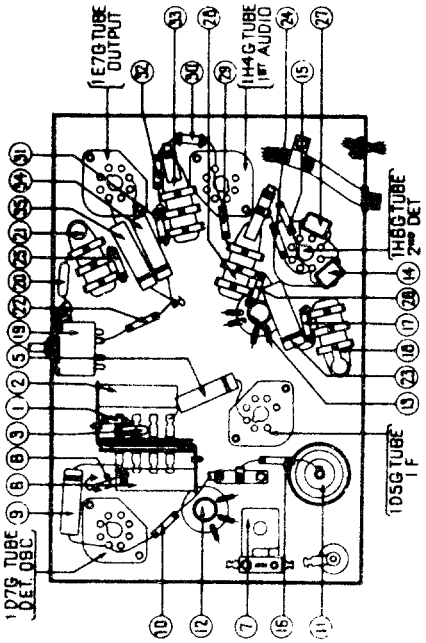

COMPILED BY M. N. BEITMAN, SUPREME PUBLICATIONS

PHILCO *Model 37-38*

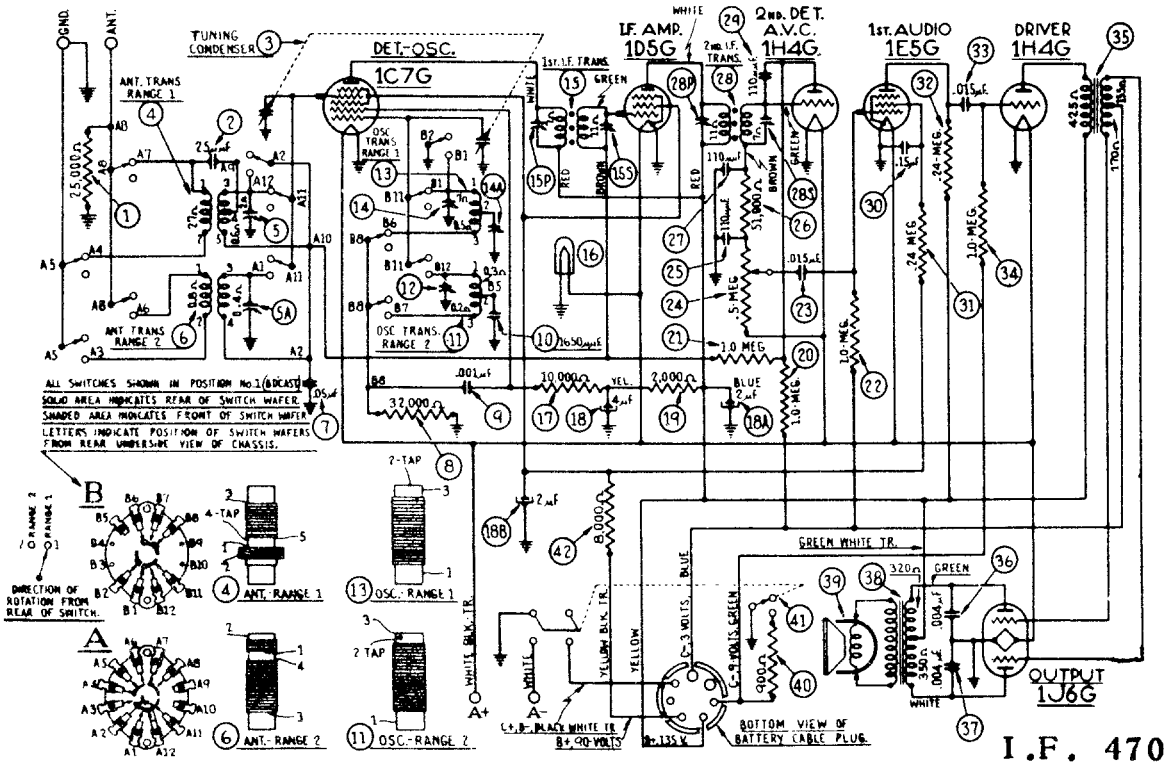

I.F. 470 KC.

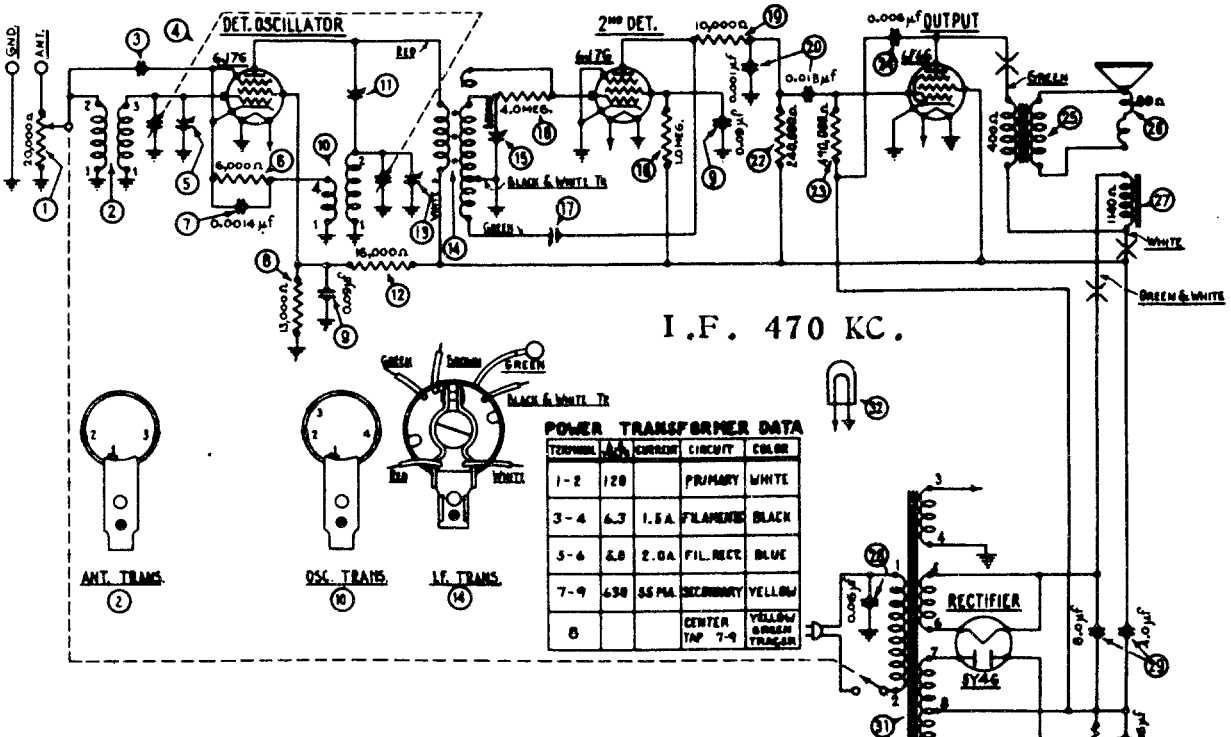

I.F. 470 KC.

POWER TRANSFORMER DATA

TERMINAL	A.C.	CURRENT	CIRCUIT	COLOR
1-2	120		PRIMARY	WHITE
3-4	6.3	1.5 A.	FILAMENTS	BLACK
5-6	5.0	2.0 A.	FIL. RECT.	BLUE
7-9	650	55 MA.	SECONDARY	YELLOW
8			CENTER TAP 7-9	YELLOW/ GREEN TRACER

Model 37-84, Code-122

Philco Model 37-93

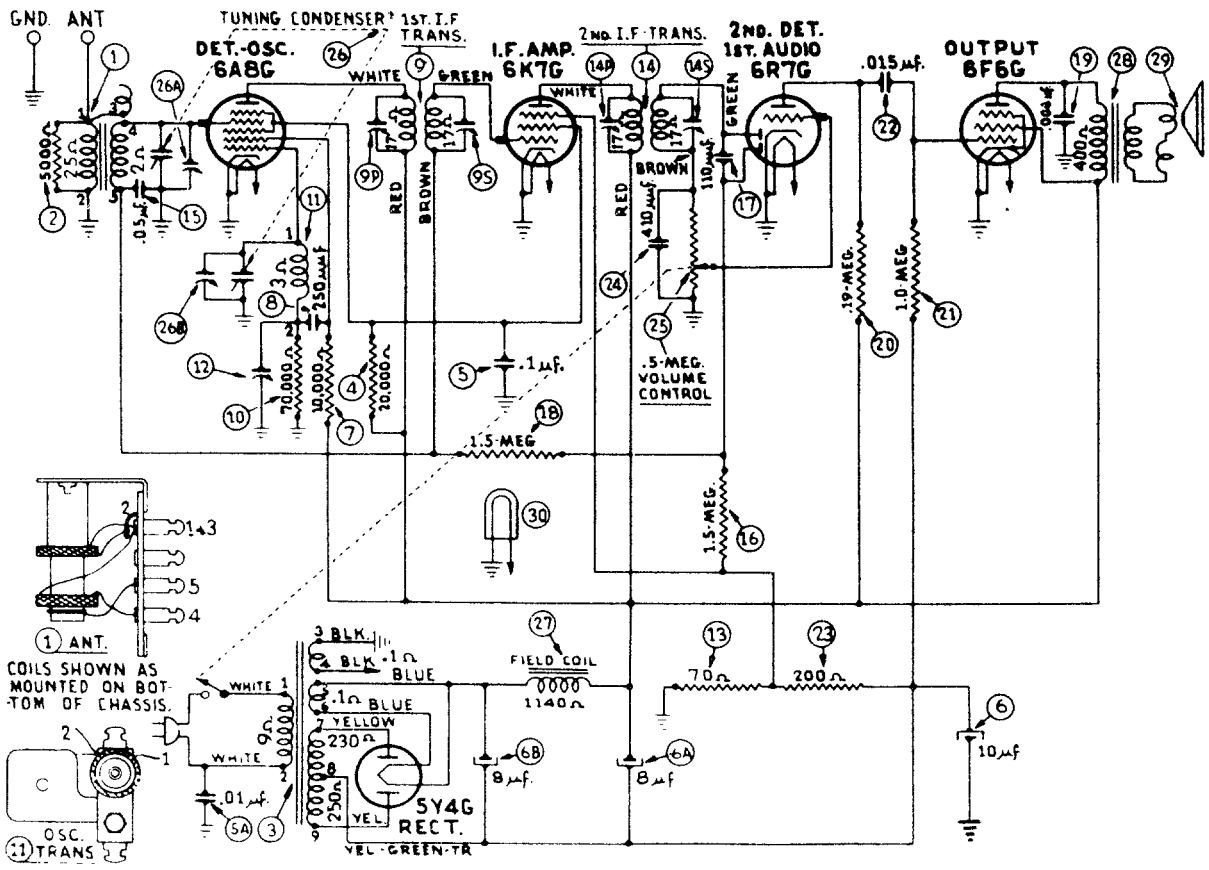

Schematic Diagram, Model 37-93

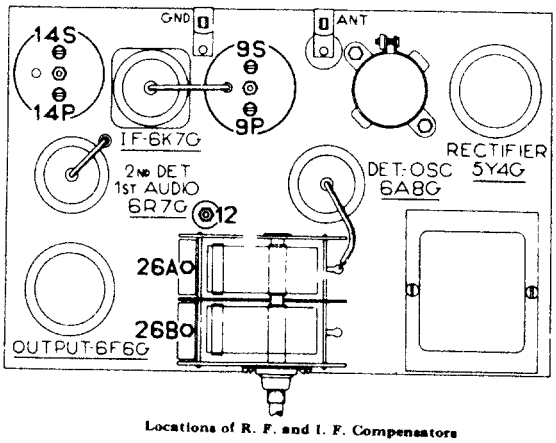

Locations of R. F. and I. F. Compensators

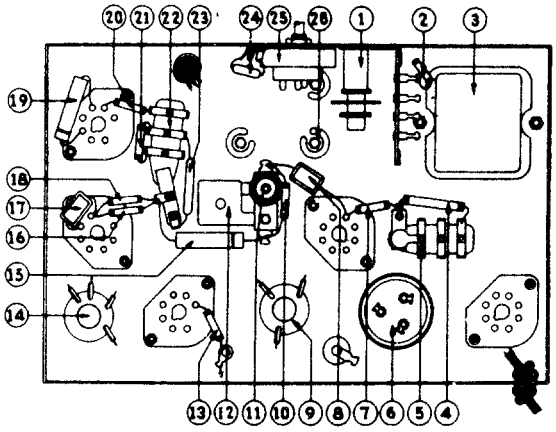

Part Locations, underside of Chassis

I.F. 470 KC.

COMPILED BY M. N. BEITMAN, SUPREME PUBLICATIONS

PHILCO *Model 37-602*

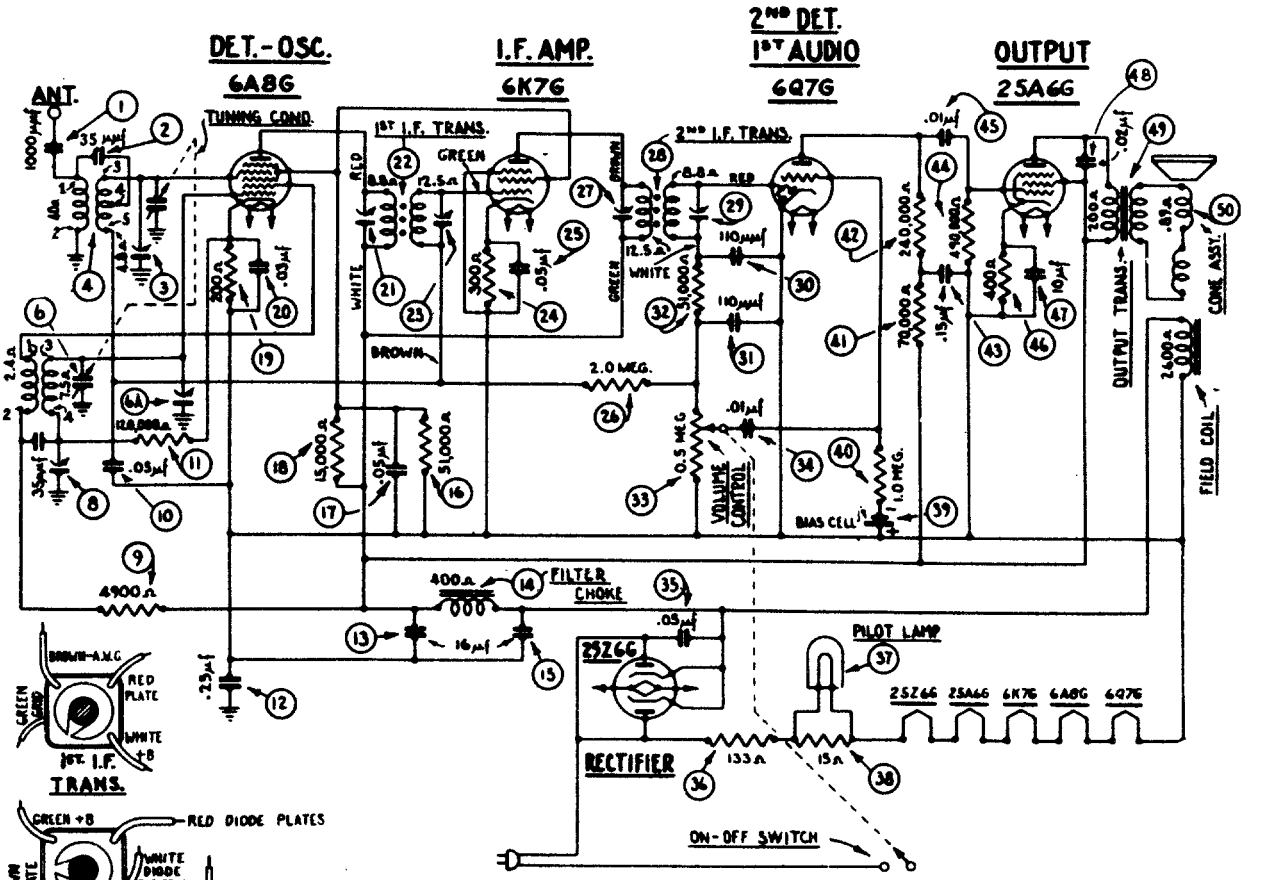

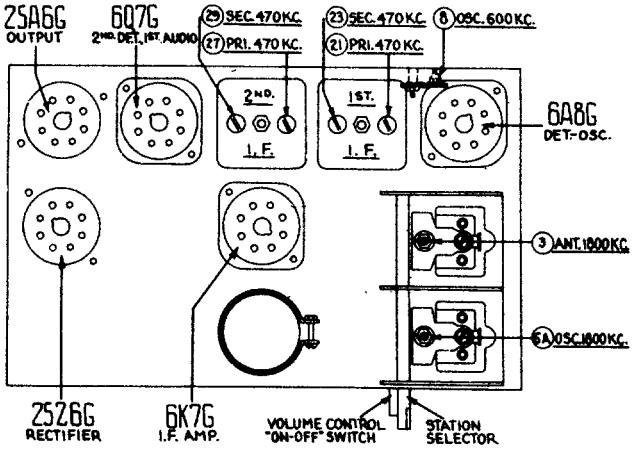

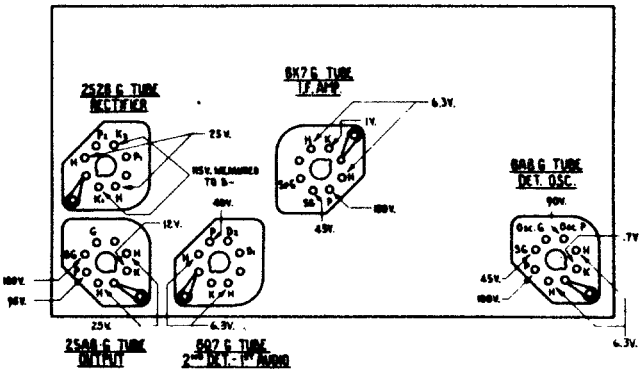

Tube Sockets as viewed from underside of chassis. (Voltages measured from socket contacts to B—)

TYPE CIRCUIT: Superheterodyne with pentode output.
POWER SUPPLY: 115 V., 25 or 60 cycle, A. C.; D. C.
TUBES USED: 1 type 6A8G, Osc. Det., 1 type 6K7G I.F. Amplifier, 1 type 6Q7G, 2nd Det. 1st audio, 1 type 25A6G output, 1 type 25Z6G rectifier.
FREQUENCY RANGE: 530--1800 K.C.
INTERMEDIATE FREQUENCY: 470 K.C.
CURRENT CONSUMPTION: 55 watts.
SPEAKER: B-4.
POWER OUTPUT: ¾ watt.

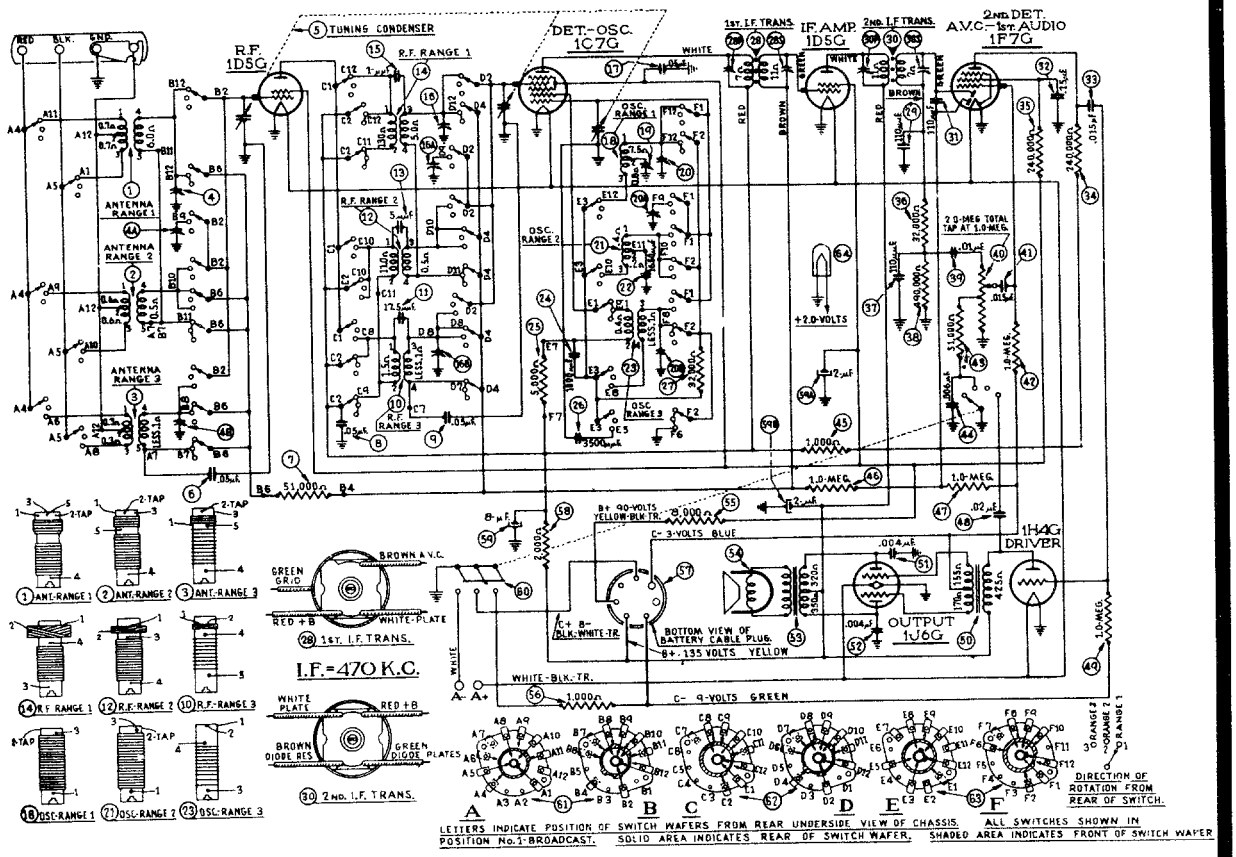

Philco Radio

Replacement Parts—Model 37-623

Schem. No.	Description	Part No.
1	Antenna Transformer (530-1720 K.C.)	32-2108
2	Antenna Transformer (2.3 to 7.4 M.C.)	32-2119
3	Antenna Transformer (7.35 to 22 M.C.)	32-2109
4	Compensator (Three Sections)	31-6092
5	Tuning Condenser	31-1818
6	Condenser (.05 mfd. Tubular)	30-4020
7	Resistor (51,00 ohms, ½ watt)	33-351339
8	Condenser (.05 mfd. Tubular)	30-4020
9	Condenser (.05 mfd. Tubular)	30-4020
10	R. F. Transformer (7.35 to 22 M.C.)	32-2126
11	Condenser (17.5 mmfd. Mica)	30-1079
12	R. F. Transformer (2.3 to 7.4 M.C.)	32-2106
13	Condenser (5 mmfd. Mica	30-1080
14	R. F. Transformer (530-1720 K.C.)	32-2105
15	Condenser (Twist wire and lug)	38-7878
16	Compensator (Three section)	31-1621
17	Condenser (.05 mfd. Tubular)	30-4020
18	Oscillator Transformer (530-1720 K.C.)	32-2120
19	Compensator (580 K.C.)	31-6036
20	Compensator (Three section)	31-6092
21	Oscillator Transformer (2.3 to 7.4 M.C.)	32-2121
22	Condenser (1650 mmfd.)	31-6096
23	Oscillator Transformer (7.35 to 22 M.C.)	32-2110
24	Condenser (1,000 mmfd. Mica)	30-4453
25	Resistor (5,000 ohms, ½ watt)	33-250393
26	Condenser (3,500 mmfd Semifixed)	31-6097
27	Resistor (32,000 ohms, ½ watt)	33-332339
28	First I. F. Transformer	32-2100
29	Condenser (110 mmfd. Mica)	30-1031
30	Second I. F. Transformer	32-2102
31	Condenser (110 mmfd. Mica)	30-1041
32	Condenser (15 mfd. Bakelite)	6287SG
33	Condenser (.015 mfd Tubular)	30-4226
34	Resistor (240,000 ohms, ½ watt)	33-424339
35	Resistor (240,000 ohms, ½ watt)	33-424339
36	Resistor (32,000 ohms, ½ watt)	33-332339
37	Condenser (110 mmfd. Mica)	30-1031
38	Resistor (490 000 ohms, ½ watt)	33-449339
39	Condenser (.01 mfd. Tubular)	30-4124
40	Volume Control	33-5158
41	Condenser (.015 mfd. Tubular)	30-4358
42	Resistor (1 megohm, ½ watt)	33-510339
43	Resistor (51,000 ohms, ½ watt)	33-351339
44	Condenser (.006 mfd. Tubular)	30-4125
45	Resistor (1,000 ohms, ½ watt)	33-210339
45	Resistor (1 megohm, ½ watt)	33-510339
47	Resistor (1 megohm, ½ watt)	33-510339
48	Condenser (.02 mfd. Tubular)	30-4113
49	Resistor (1 megohm, ½ watt)	33-510339
50	Audio Input Transformer	32-7637
51	Condenser (.004 mfd. Tubular)	30-4456
52	Condenser (.004 mfd. Tubular)	30-4456
53	Output Transformer	32-7638
54	Cone and Voice Coil Assembly KR-17	36-3540
	Cone and Voice Coil Assembly HR-12	36-3557
55	Resistor (8,000 ohm, ½ watt)	33-280339
56	Resistor (1,000 ohms, ½ watt)	33-210339
57	Cable Battery	41-3198
58	Resistor (2,000 ohms, ½ watt)	33-220339
59	Electrolytic Condenser (2, 2, 8 mfd.)	30-2161
60	Power and Tone Control Switch	42-1207
61	Range Switch (ANT)	42-1200
62	Range Switch (R.F.)	42-1245
63	Range Switch (Osc.)	42-1246
	Pilot Lamp Assembly	38-7875
	Pilot Lamp	34-2160
	Vernier Drive Assembly	31-1871
	Dial	27-5214
	Dial Hub	28-7187
	Dial Clamp	28-2837
	Dial Guard	27-8324
	Set Screw	W-1641
	Gear (Dial)	28-7185
	Thrust Spring	28-3611
	Thrust Washer	28-3976
	C Washer	28-3904
	Gear (Drive)	31-1884
	Mask	27-5198
	Mask Arm and Assembly	31-1940
	Shaft Coupling (Mask)	31-1941
	Felt Washers	27-8399
	Washer	27-8318
	Snap Fastener	28-4279
	Indicator Bracket and Lens Assembly	38-7912
	Mask Guide and Lamp Support	38-7844
	Shaft and Index Plate (Range Switch)	42-1173
	Shaft (Volume Control)	38-8059
	Retaining Clip (Vol. Shaft)	28-4394
	Spring (Vol. Shaft)	28-4117
	Socket (8 prong)	27-6058
	Socket (7 prong)	27-6057
	Shield Tube	28-2726
	Base Tube Shield	28-3898
	Grommet Mtg. R. F. Unit	27-4317
	Sleeve Mtg. R. F. Unit	28-2257
	Screw Mtg. R. F. Unit	W-729
	Washer Mtg. R. F. Unit	28-3927
	Washer Mtg. R. F. Unit	27-8339
	Rubber Mtg. Tuning Condenser	27-4325
	Mtg. Plate (Trans.)	28-3808
	Mtg. Spacer (Trans.)	27-8228
	Mtg. Screw (Trans.)	W-1635
	Terminal Panel I. F. Unit	38-7703
	Cable Speaker	41-3207
	Mtg. Bolt (Chassis)	W-1495
	Mtg. Rubbers	5189
	Mtg. Bushing	27-4360
	Knob	27-4330
	Knob	27-4331
	Knob	27-4326
	Knob	27-4332
	"B" Battery	41-8007
	"A" Battery (Wet)	172R
	"A" Battery (Dry)	41-8011
	Ballast Lamp	1FI
	Bezel Plate and Frame	40-5939
	Gasket	27-8311
	Glass	27-8298
	Ring	28-3967
	Screws	W-1644

B CABINET

Baffle and Silk Assembly	40-5970
Speaker—KR17	36-1248

J CABINET

Speaker—HR12	36-1250
Baffle and Silk Assembly	40-5971
Speaker	36-1250
Speaker Ring	27-8016
Speaker Bolts	W-1693

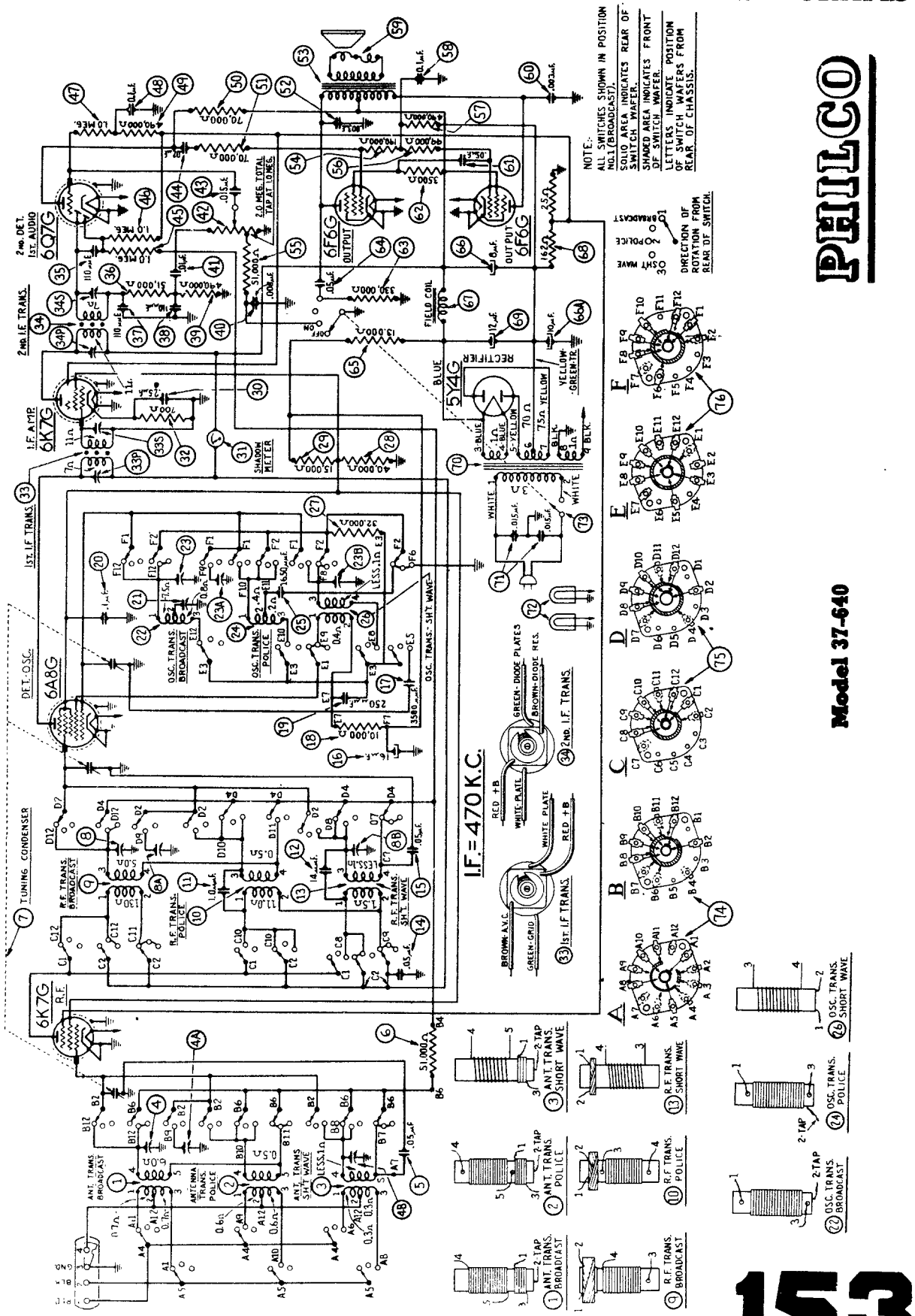
PHILCO
Model 37-640
I.F.=470 K.C.
6K7G R.F.
6A8G DET.-OSC.
6K7G I.F. AMP.
6Q7G 2ND. DET. 1ST. AUDIO
6F6G OUTPUT
6F6G OUTPUT
5Y4G RECTIFIER
TUNING CONDENSER
1ST. I.F. TRANS.
2ND. I.F. TRANS.
2ND. I.F. TRANS.
SHADOW METER
FIELD COIL
2.0 MEG. TOTAL TAP AT 1.0 MEG.
ANT. TRANS. BROADCAST
ANT. TRANS. POLICE
ANT. TRANS. SHT. WAVE
R.F. TRANS. BROADCAST
R.F. TRANS. POLICE
R.F. TRANS. SHT. WAVE
OSC. TRANS. BROADCAST
OSC. TRANS. POLICE
OSC. TRANS. SHT. WAVE
NOTE:
ALL SWITCHES SHOWN IN POSITION NO. 1 (BROADCAST).
SOLID AREA INDICATES REAR OF SWITCH WAFER.
SHADED AREA INDICATES FRONT OF SWITCH WAFER.
LETTERS INDICATE POSITION OF SWITCH WAFERS FROM REAR OF CHASSIS.
DIRECTION OF ROTATION FROM REAR OF SWITCH.
BROADCAST
POLICE
SHT WAVE
2-TAP ANT. TRANS. BROADCAST
2-TAP ANT. TRANS. POLICE
2-TAP ANT. TRANS. SHORT WAVE
R.F. TRANS. BROADCAST
R.F. TRANS. POLICE
R.F. TRANS. SHORT WAVE
2-TAP OSC. TRANS. BROADCAST
2-TAP OSC. TRANS. POLICE
OSC. TRANS. SHORT WAVE

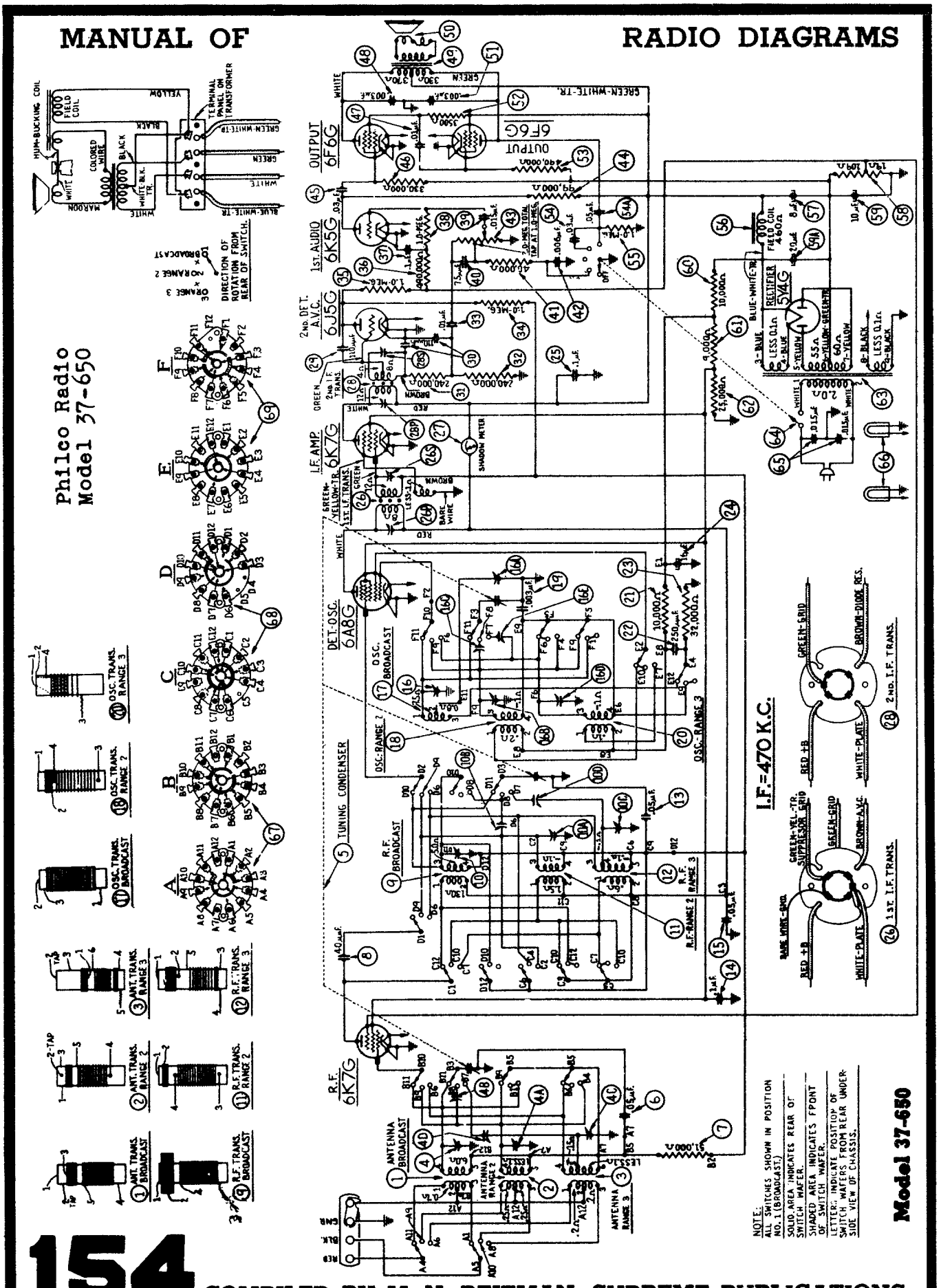
Philco Radio
Model 37-650
OUTPUT 6F6G
1ST. AUDIO 6K5G
2ND. DET. A.V.C. 6J5G
I.F. AMP. 6K7G
DET.-OSC. 6A8G
R.F. 6K7G
RECTIFIER 5Y4G
TUNING CONDENSER
I.F.=470 K.C.
Model 37-650

PHILCO . . . . . Model 38-116, Code 121

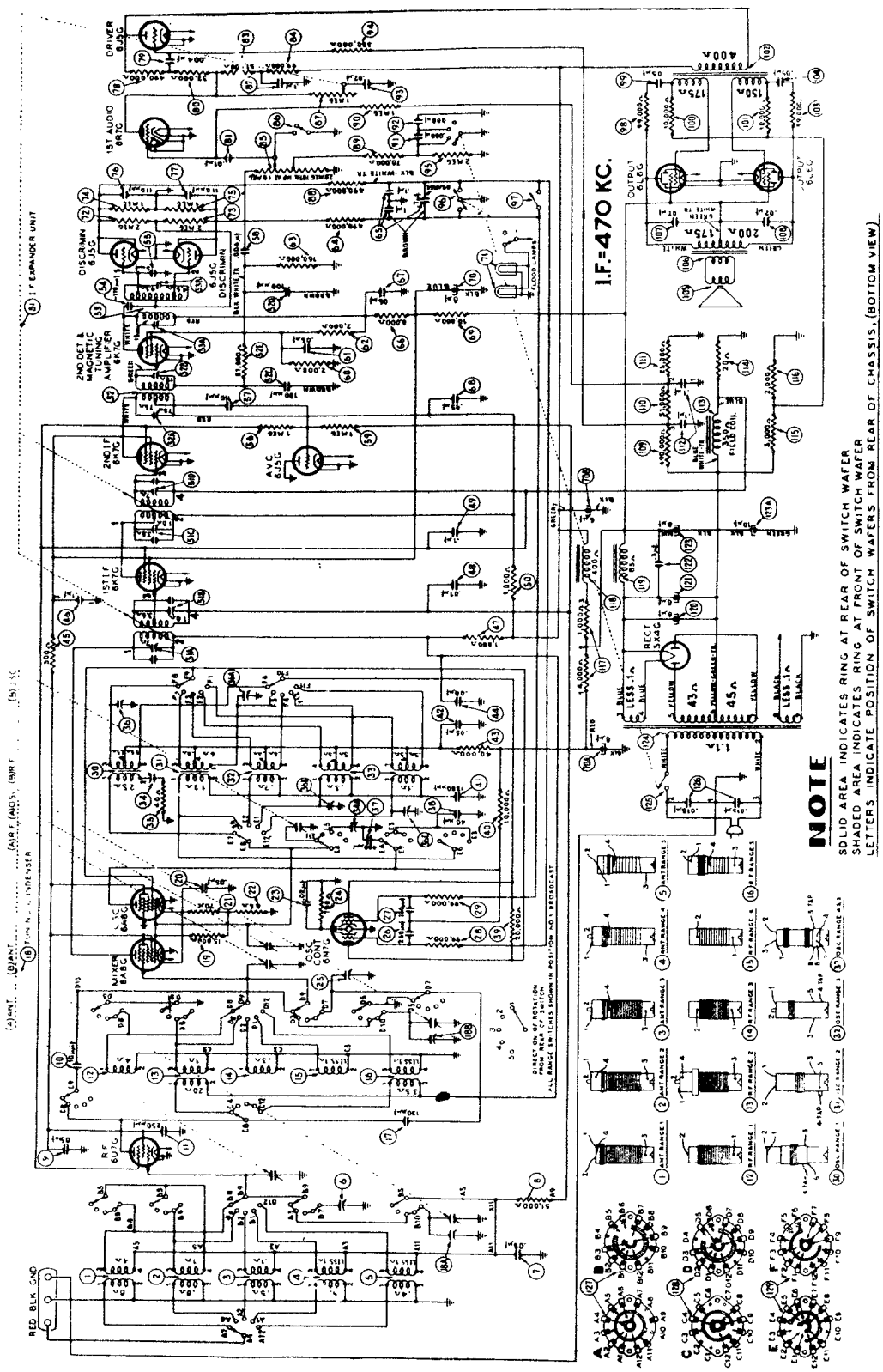

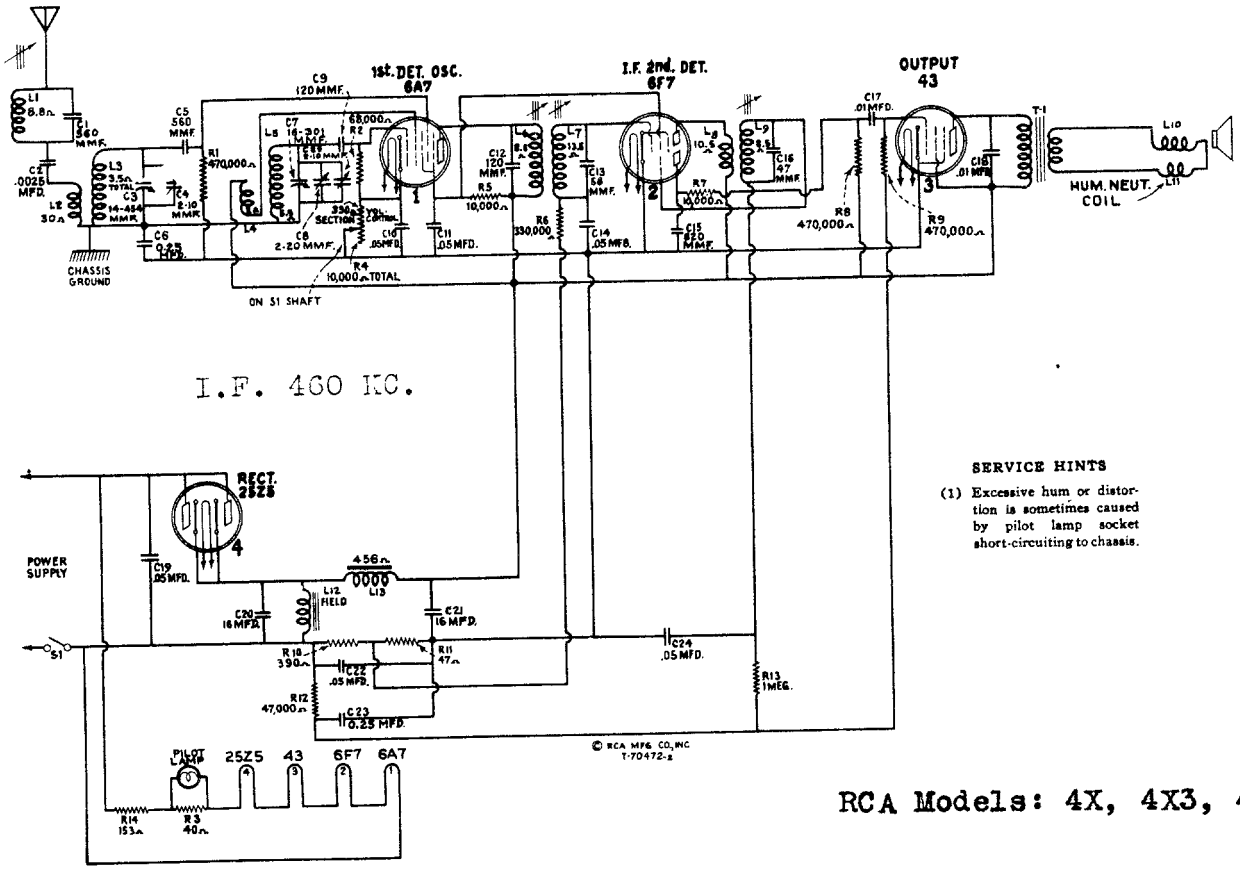

SERVICE HINTS

(1) Excessive hum or distortion is sometimes caused by pilot lamp socket short-circuiting to chassis.

RCA Models: 4X, 4X3, 4X4

Schematic Circuit Diagram

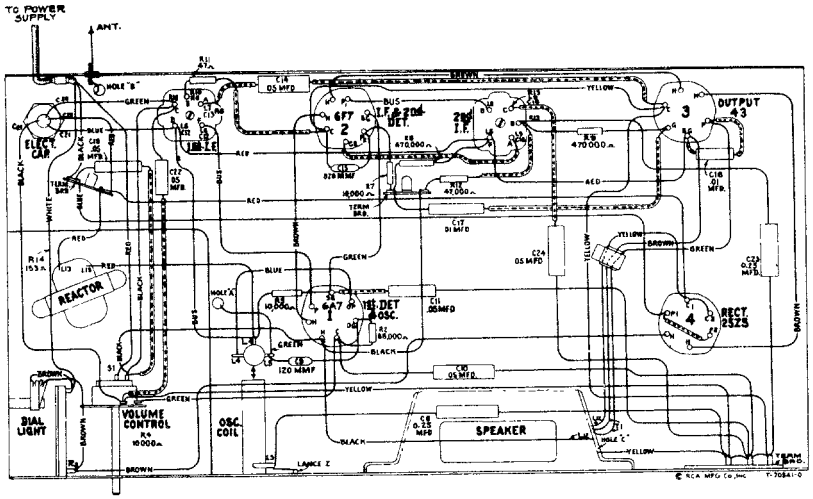

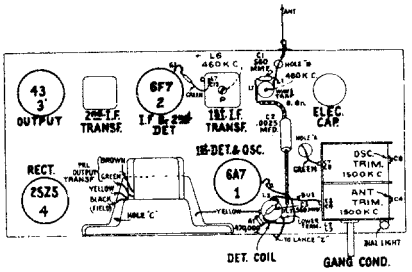

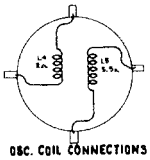

OSC. COIL CONNECTIONS

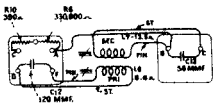

1st I.F. TRANSF. CONNECTIONS

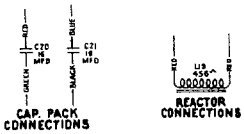

CAP. PACK CONNECTIONS

REACTOR CONNECTIONS

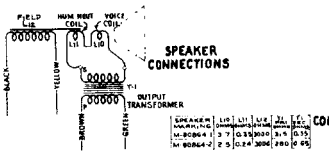

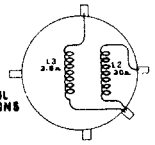

DET. COIL CONNECTIONS

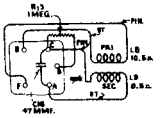

2nd I.F. TRANSF. CONNECTIONS

Chassis Wiring Diagram, Radiotron, Coil, and Trimmer Locations

156

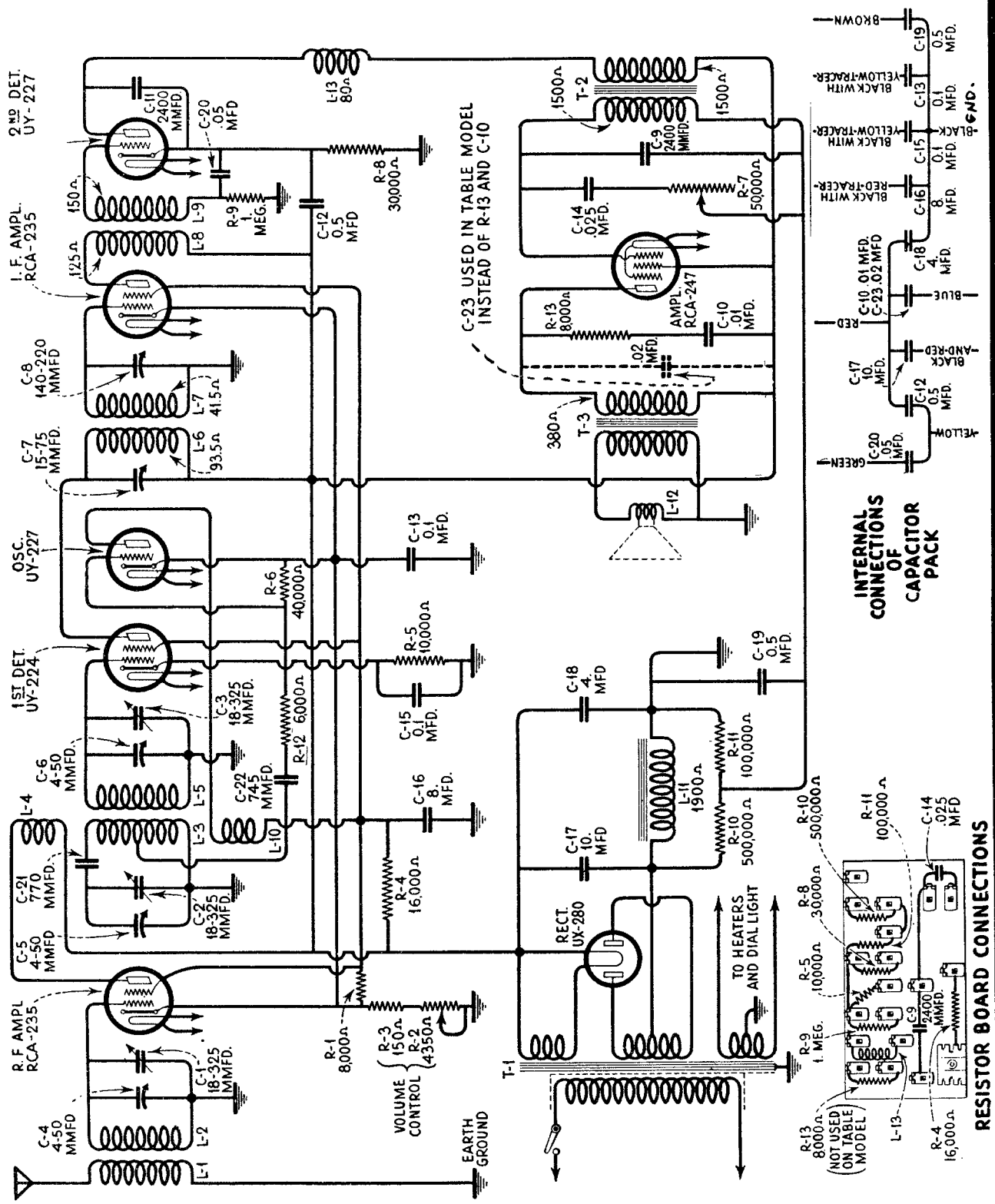

RCA Victor Models R-4 and R-6

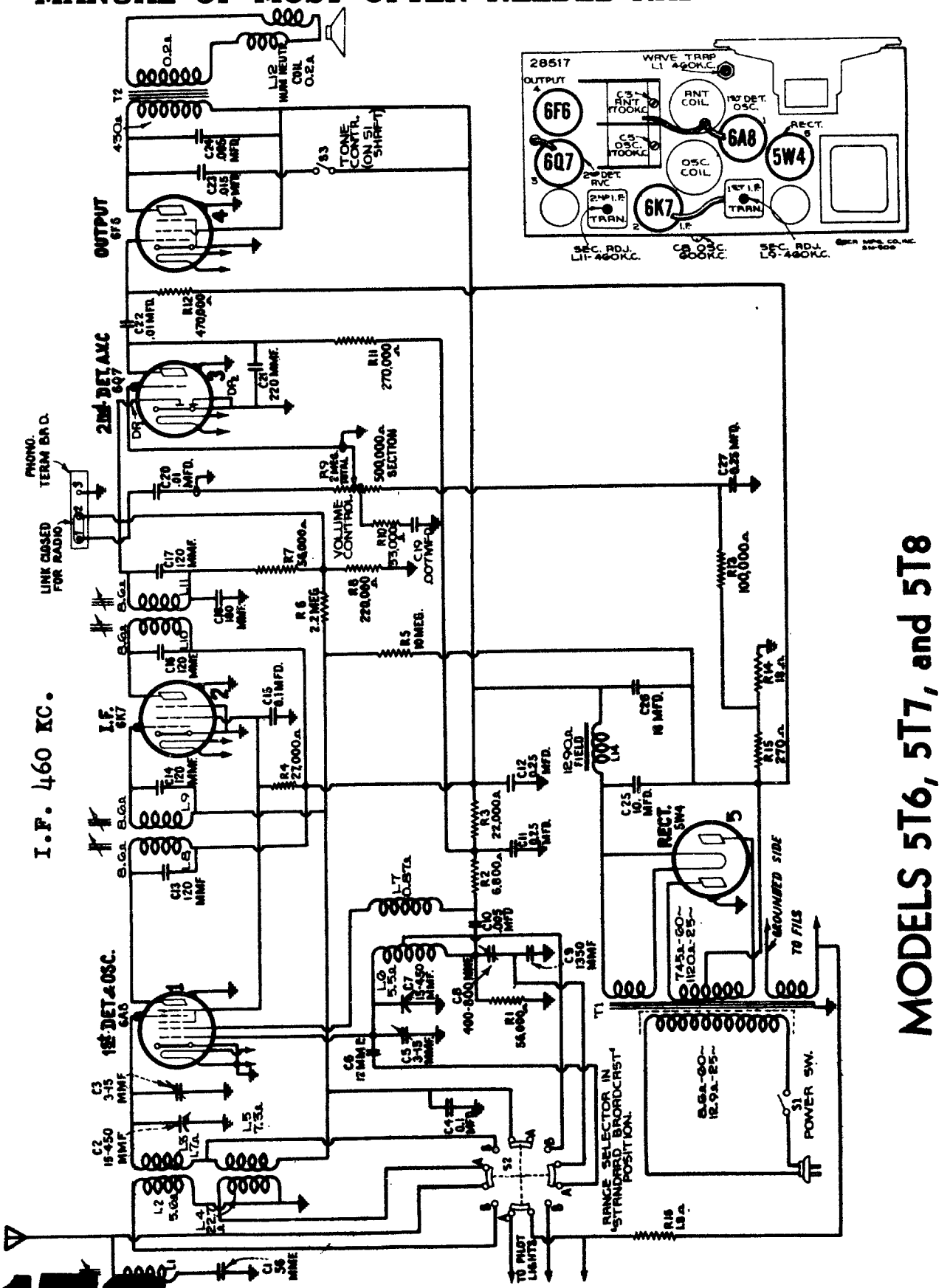

MODELS 5T6, 5T7, and 5T8

COMPILED BY M. N. BEITMAN, SUPREME PUBLICATIONS

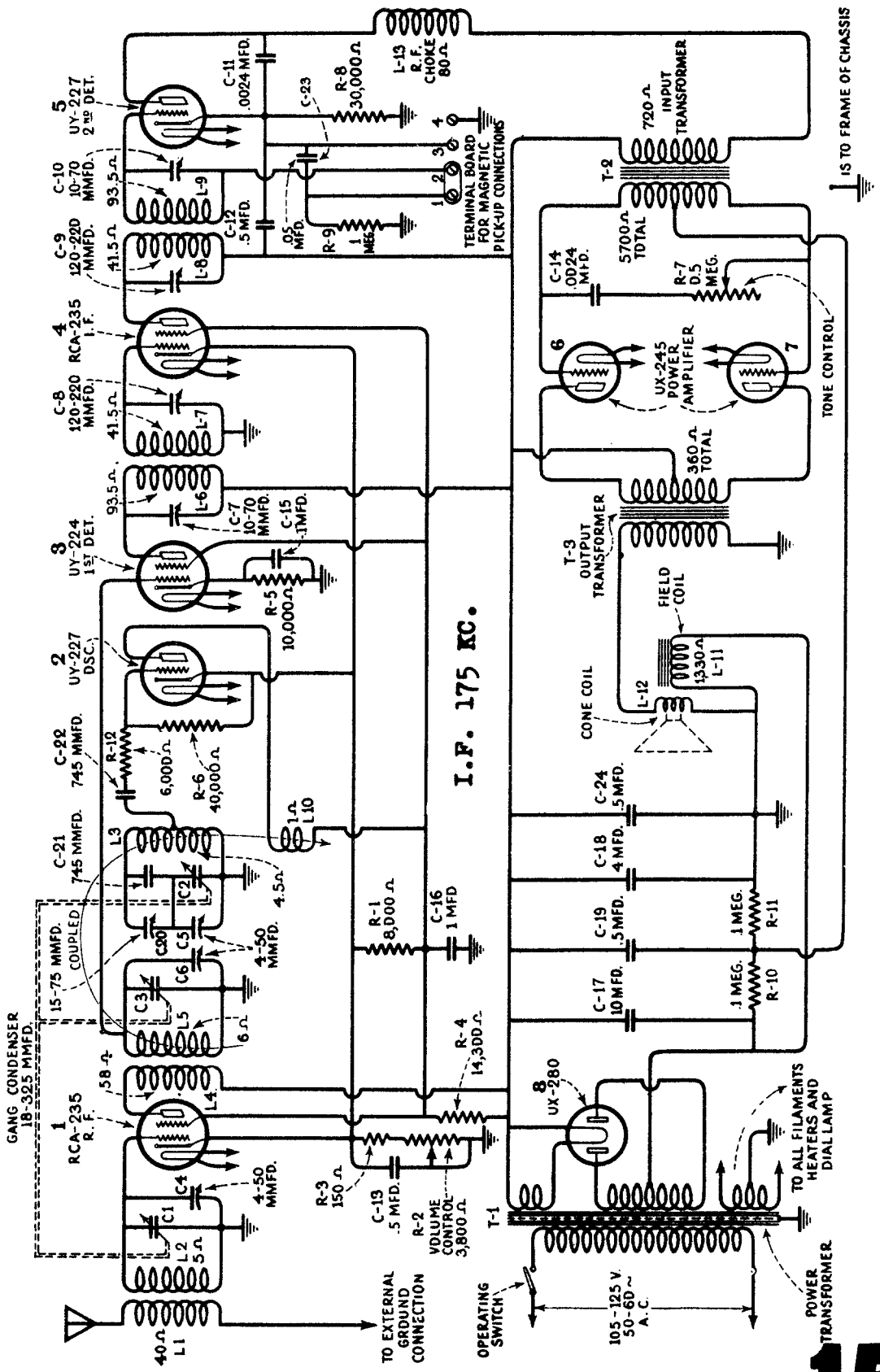
1 RCA-235 R.F.
2 UY-227 DSC.
3 UY-224 1ST DET.
4 RCA-235 I.F.
5 UY-227 2ND DET.
6
7
8 UX-280
UX-245 POWER AMPLIFIER
I.F. 175 KC.
GANG CONDENSER 18-325 MMFD.
15-75 MMFD. COUPLED
C-21 745 MMFD.
C-22 745 MMFD.
C-8 120-220 MMFD.
C-9 120-220 MMFD.
C-10 10-70 MMFD.
C-11 .0024 MFD.
C-12 .5 MFD.
C-13 .5 MFD.
C-14 .0024 MFD.
C-15 .1 MFD.
C-16 1 MFD
C-17 10 MFD.
C-18 4 MFD.
C-19 .5 MFD.
C-23 .05 MFD.
C-24 .5 MFD.
C-7 10-70 MMFD.
4-50 MMFD.
R-1 8,000 Ω
R-2 VOLUME CONTROL 3,800 Ω
R-3 150 Ω
R-4 14,300 Ω
R-5 10,000 Ω
R-6 40,000 Ω
R-7 0.5 MEG.
R-8 30,000 Ω
R-9 1 MEG.
R-10 .1 MEG.
R-11 .1 MEG.
R-12 6,000 Ω
L-13 R.F. CHOKE 80 Ω
720 Ω INPUT TRANSFORMER
5700 Ω TOTAL
360 Ω TOTAL
T-2
T-3 OUTPUT TRANSFORMER
FIELD COIL
1330 Ω L-11
CONE COIL
L-12
TONE CONTROL
TERMINAL BOARD FOR MAGNETIC PICK-UP CONNECTIONS
IS TO FRAME OF CHASSIS
TO ALL FILAMENTS HEATERS AND DIAL LAMP
POWER TRANSFORMER
T-1
105-125 V. 50-60~ A.C.
OPERATING SWITCH
TO EXTERNAL GROUND CONNECTION
40 Ω L1
5 Ω L2
6 Ω L5
58 Ω L4
4.5 Ω L3
1 Ω L10
R.C.A. R-7, R-9

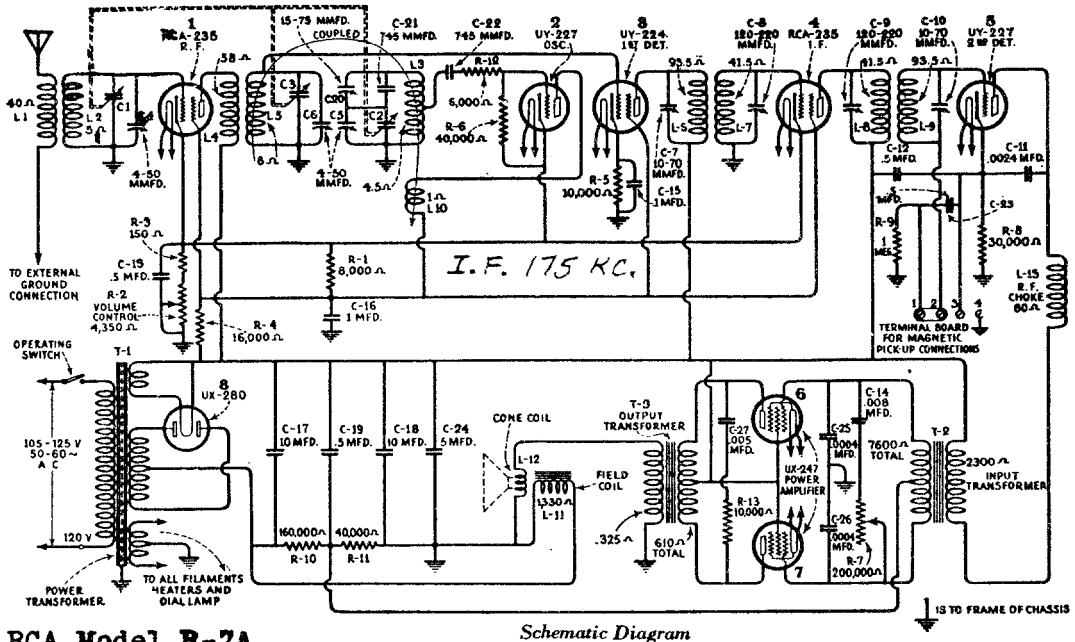

RCA Model R-7A

Schematic Diagram

SOCKET VOLTAGES—110 VOLT A. C. LINE

Radiotron No.	Cathode to Heater Volts D. C.	Cathode or Filament to Control Grid Volts D. C.	Cathode to Screen Grid Volts D. C.	Cathode or Filament to Plate Volts D.C.	Plate Current M. A.	Heater or Filament Volts A. C.	Radiotron No.	Cathode to Heater Volts D. C.	Cathode or Filament to Control Grid Volts D. C.	Cathode to Screen Grid Volts D. C.	Cathode or Filament to Plate Volts D.C.	Plate Current M. A.	Heater or Filament Volts A. C.
VOLUME CONTROL AT MINIMUM							VOLUME CONTROL AT MAXIMUM						
1	38	35	50	200	.0	2.2	1	2.0	2.5	60	235	3.5	2.2
2	38	0	—	50	3.5	2.2	2	2.0	.0	—	50	4.5	2.2
3	7	6	80	235	0.5	2.2	3	4.0	4.0	55	230	0.5	2.2
4	38	35	50	200	.0	2.2	4	2.0	2.5	58	235	3.5	2.2
5	22	8	—	210	0.7	2.2	5	22	8	—	210	0.7	2.2
6	—	12	225	220	30	2.2	6	—	12	225	220	30	2.2
7	—	12	225	220	30	2.2	7	—	12	225	220	30	2.2

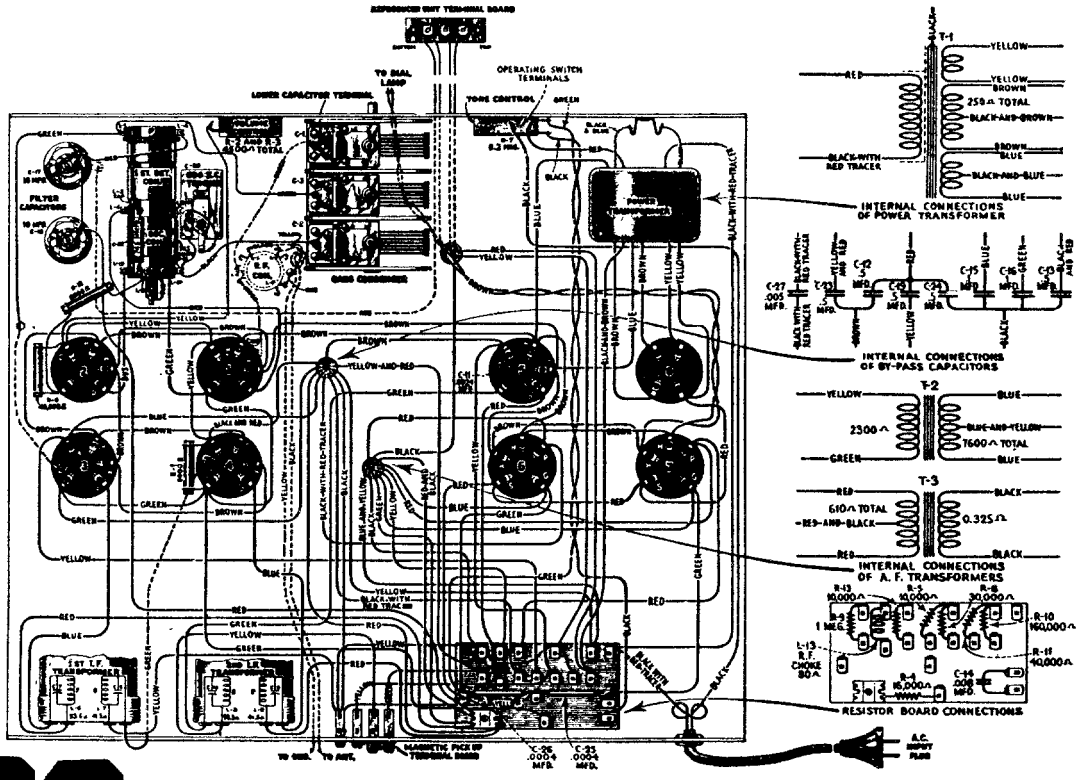

COMPILED BY M. N. BEITMAN, SUPREME PUBLICATIONS

RCA Models R-8, R-12 AC

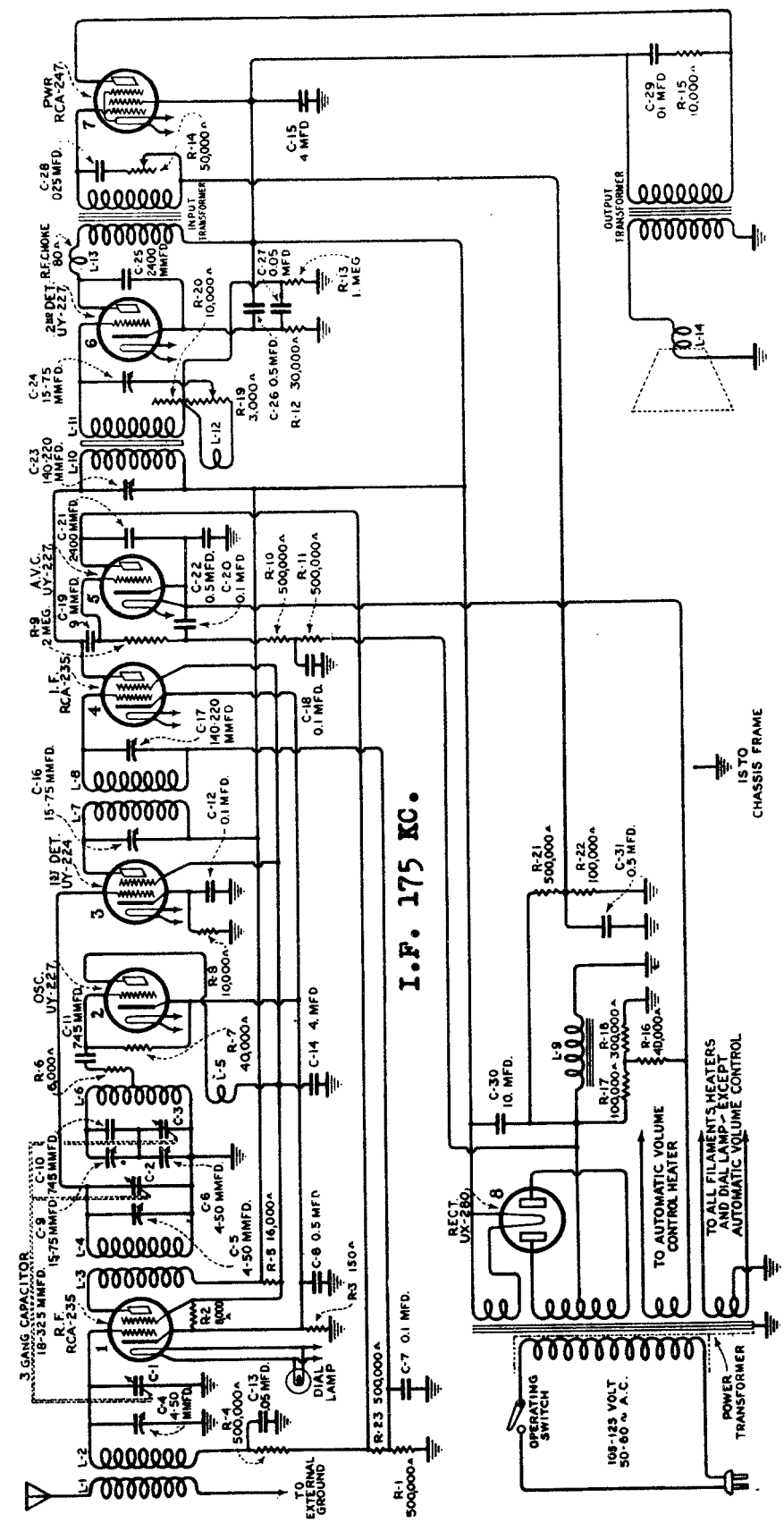

Radiotron No.	Cathode to Heater Volts, D. C.	Cathode or Filament to Control Grid Volts, D. C.	Cathode or Filament to Screen Grid Volts, D. C.	Cathode or Filament to Plate Volts, D. C.	Plate Current M. A.	Screen Current M. A.	Heater or Filament Volts, A. C.
1. R. F.	4.0	0.5	70	260	4.0	0.5	2.66
2. Osc.	4.0	0	—	65	6.0		2.66
3. 1st Det.	7.0	6.0	70	260	0.75	0.1	2.66
4. I. F.	4.0	4.0	70	260	4.0	0.5	2.66
5. 2nd Det.	28.0	10.0	—	250	1.0	—	2.66
6. A. V. C.	0	0	—	25	0		2.66
7. Power	—	10.0	290	280	35.0	-	2.66

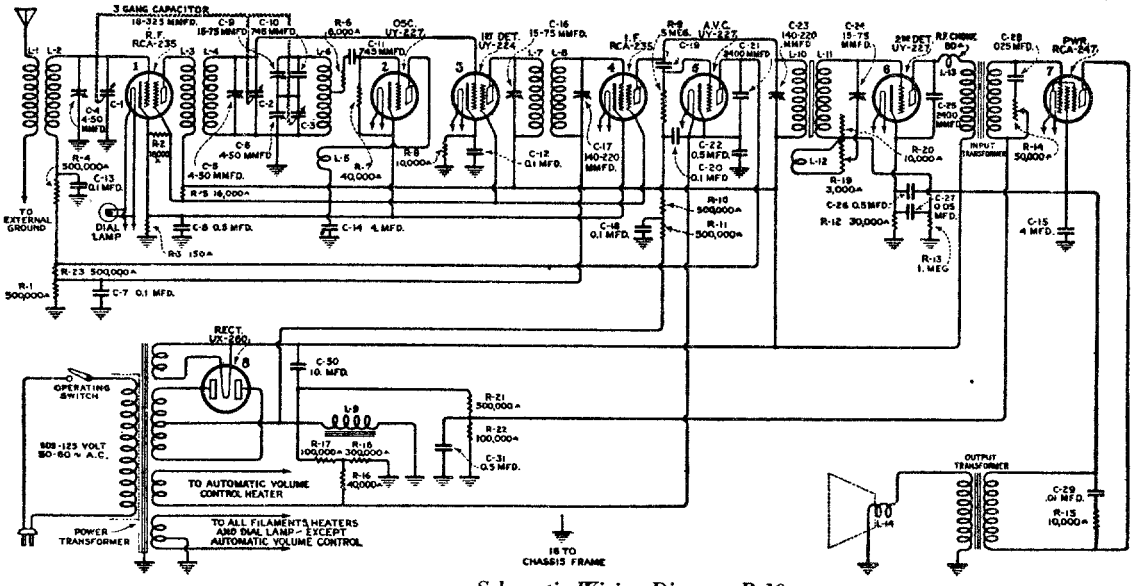

Schematic Wiring Diagram R-10

RCA Victor

I.F. 175 KC.

Radiotron No.	Cathode to Heater Volts, D. C.	Cathode or Filament to Control Grid Volts, D. C.	Cathode or Filament to Screen Grid Volts, D. C.	Cathode or Filament to Plate Volts, D. C.	Plate Current M. A.	Screen Current M. A.	Heater or Filament Volts, A. C.
1	2	*0.1	75	210	5.0	0.5	2.2
2	8	0	—	60	5.0	—	2.2
3	7	7.0	70	205	0.5	0.1	2.2
4	2	*0.1	75	210	5.0	0.5	2.2
5	0	0	—	30	0	—	2.2
6	20	*8.0	—	185	0.5	—	2.2
7	—	10	210	210	25	—	2.2

*Not true reading due to resistance in circuit.

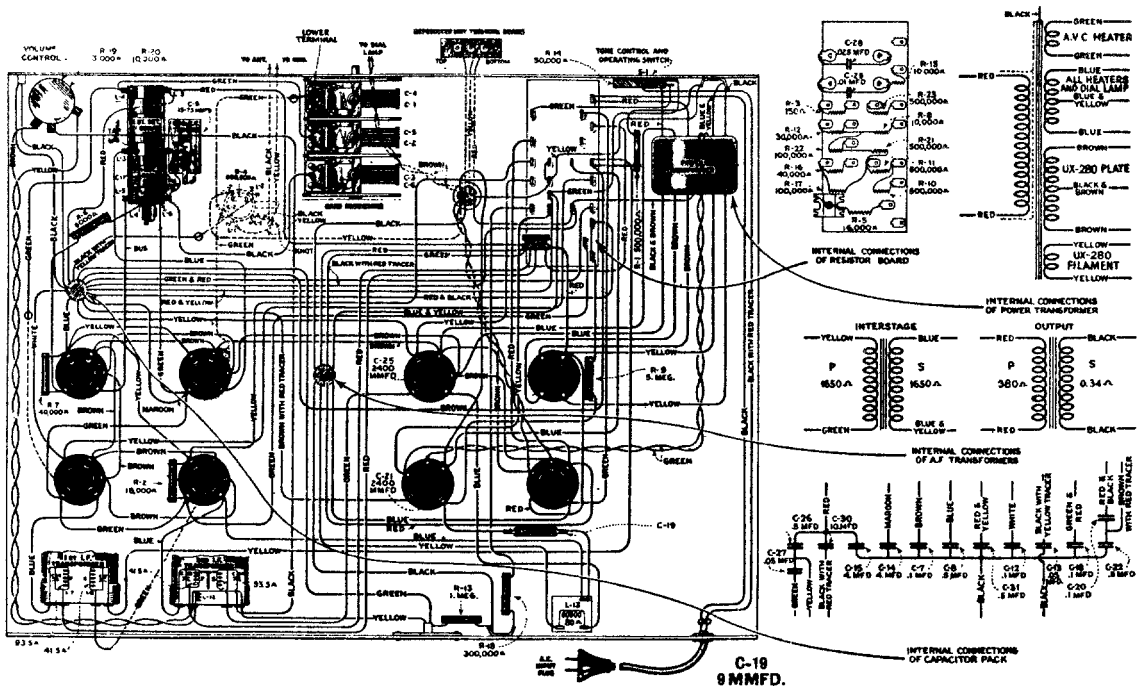

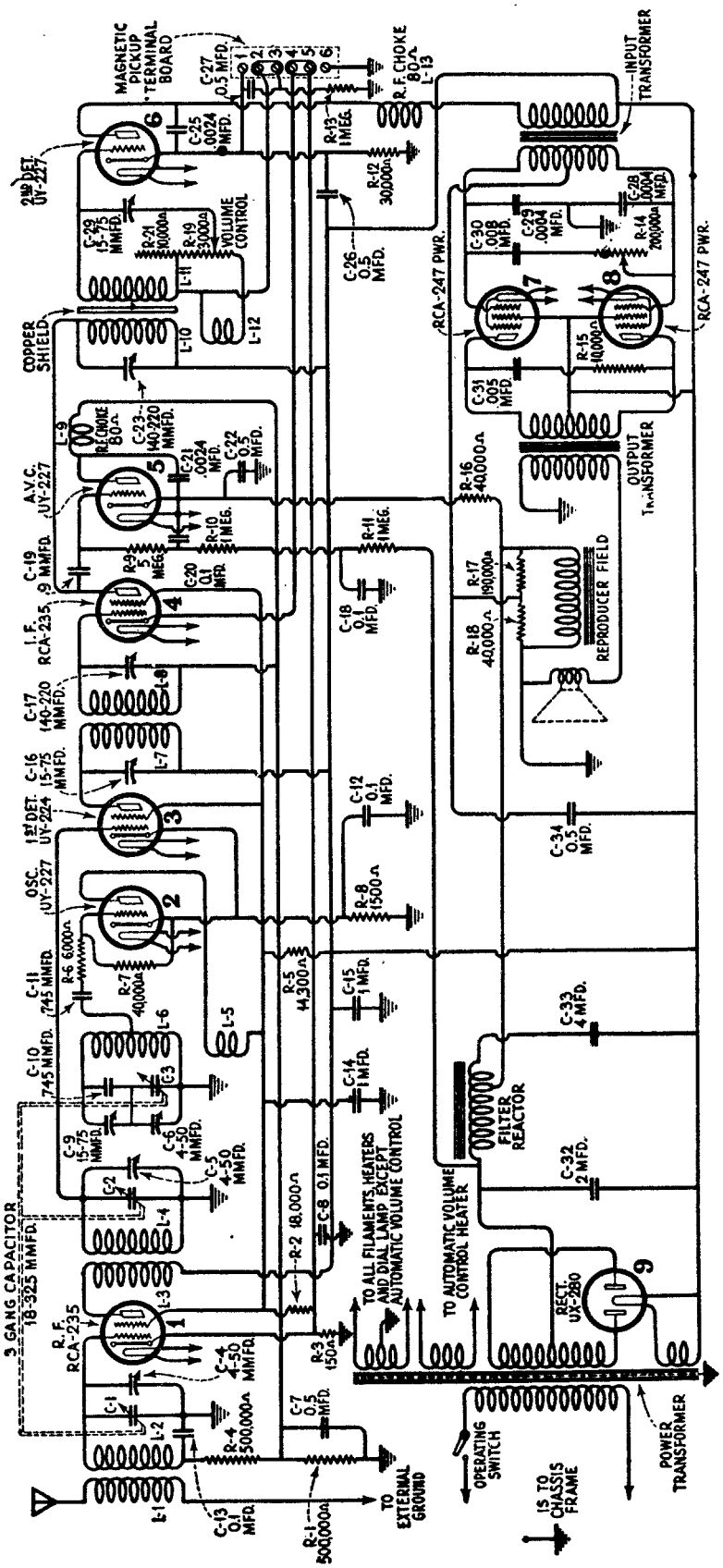

I.F. 175 KC.

R.C.A. Schematic Circuit Diagram of Model R-11

Radiotron No.	Cathode to Heater Volts D. C.	Cathode or Filament to Control Grid Volts, D. C.	Cathode or Filament to Screen Grid Volts, D. C.	Cathode or Filament to Plate Volts, D. C.	Plate Current M. A.	Screen Current M. A.	Heater or Filament Volts, A. C.
1	2	*0.1	75	205	5.0	0.5	2.2
2	8	0	—	60	5.0	—	2.2
3	7	7.0	70	200	0.5	0.1	2.2
4	2	*0.1	75	205	5.0	0.5	2.2
5	0	0	—	25	0	—	2.2
6	20	*8.0	—	180	0.5	—	2.2
7	—	10	210	205	25	—	2.2
8	—	10	210	205	25	—	2.2

* Not true reading due to resistance in circuit.

RCA VICTOR MODEL 13K

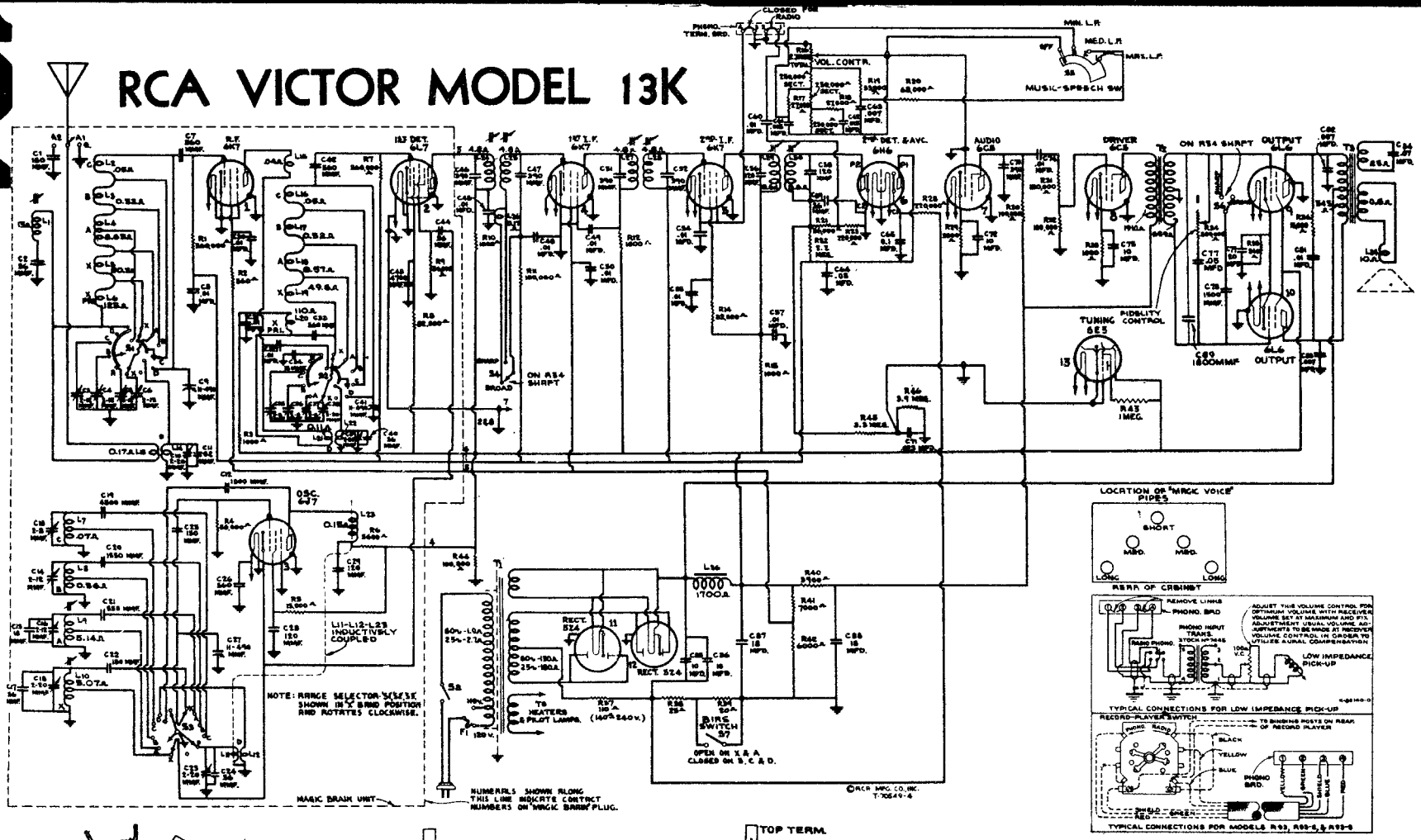

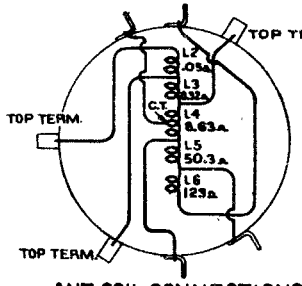

ANT. COIL CONNECTIONS

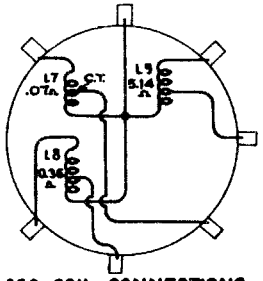

OSC. COIL CONNECTIONS

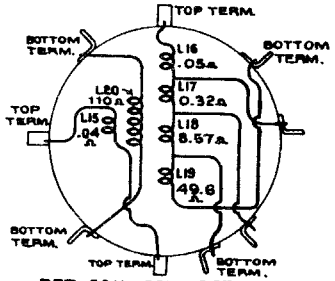

DET. COIL CONNECTIONS

I.F. 460 KC.

SERVICE HINTS

(1) Excessive heating of the 6E5 tube may be due to high cathode current — in excess of 7 ma. The tube should be replaced and the condition of the 5Z4 rectifier checked.

(2) Low sensitivity or intermittent operation may be caused by C-43 or C-33 developing low-resistance leakage. Check both capacitors and replace if found defective.

(3) Low sensitivity around 15—16 megacycles may be caused by dirty or poor contact of grounding contact finger on S-3.

(4) Motorboating may be due to intermittent capacitor Stock No. 13025.

RCA RADIOLA 16

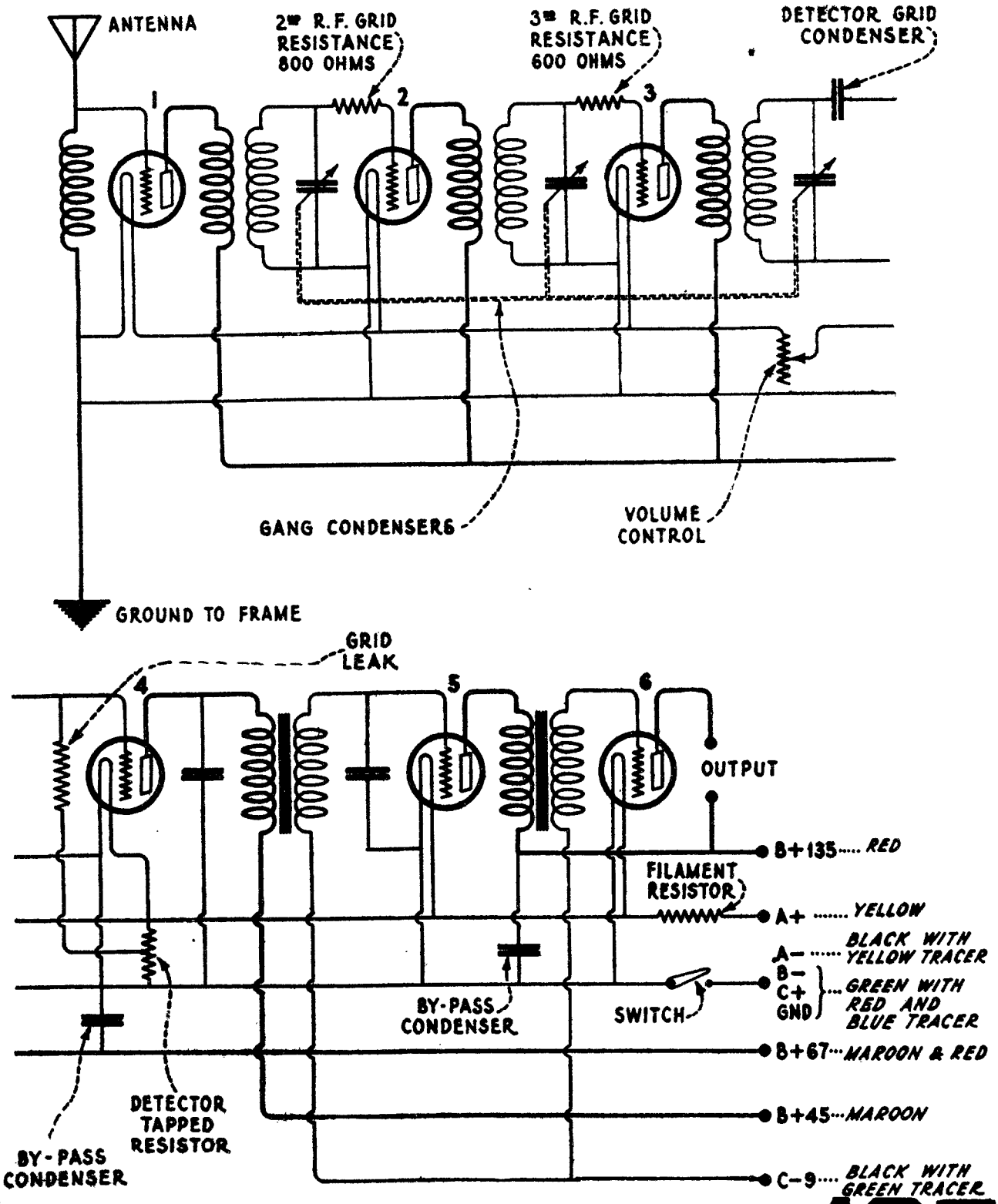

RCA RADIOLA 17

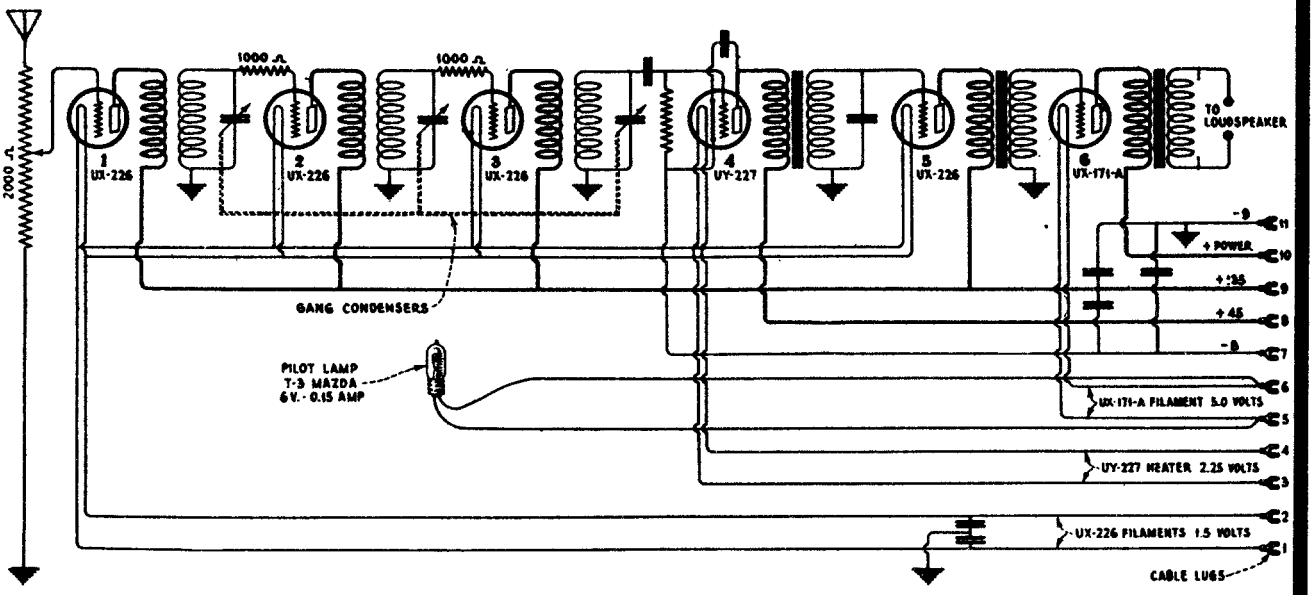

Schematic circuit diagram of receiver assembly.

Indication	*Cause*	*Remedy*
	Defective operating switch	Repair or replace switch
	Loose volume control arm	Tighten volume control arm
	Defective power cable	Replace power cable
	Defective R.F. transformer	Replace R.F. transformer assembly
No signals	Defective A.F. transformer	Replace A.F. transformer assembly
	Defective By-pass condenser	Replace By-pass condenser
	Defective socket power unit	Check socket power unit by means of continuity test and make any repairs or replacements necessary

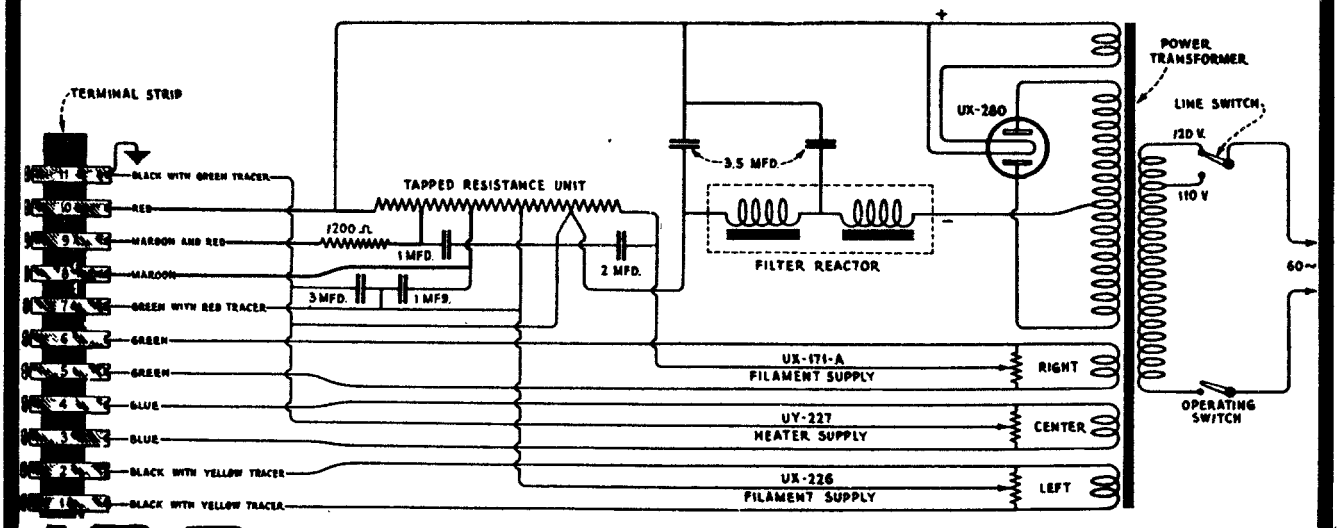

COMPILED BY M. N. BEITMAN, SUPREME PUBLICATIONS

RCA RADIOLA 18

(105-125 Volts, 50-60 Cycle A.C.)

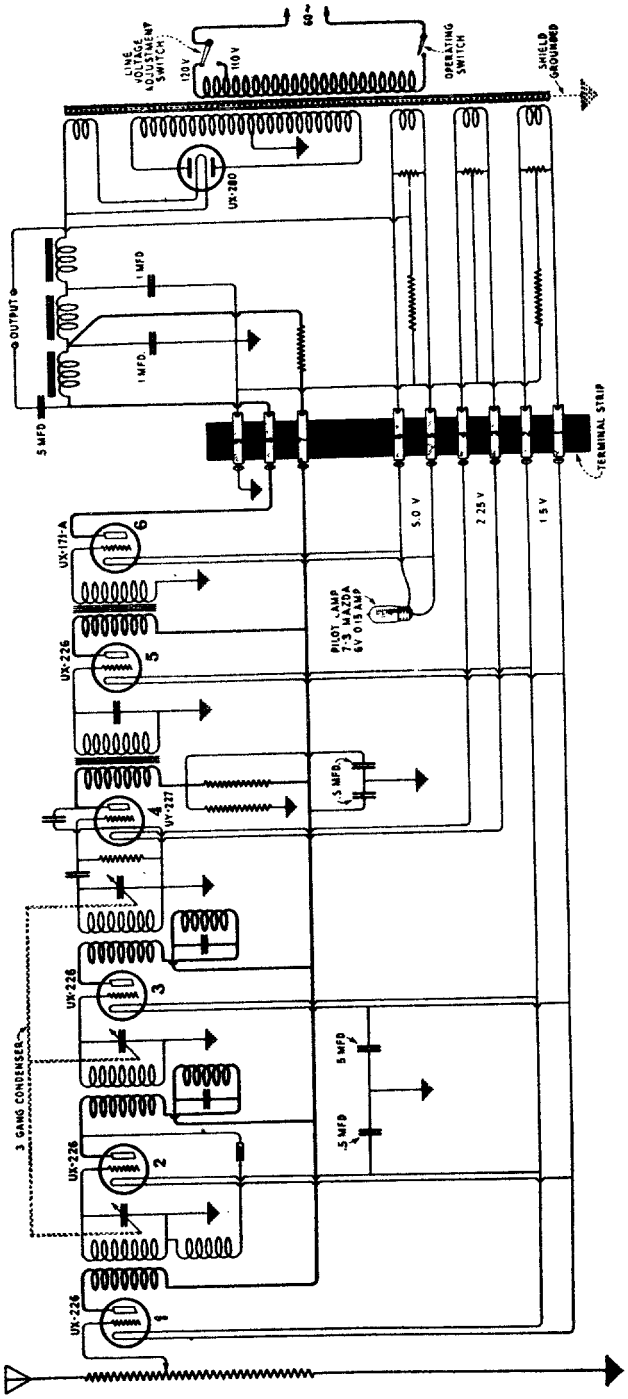

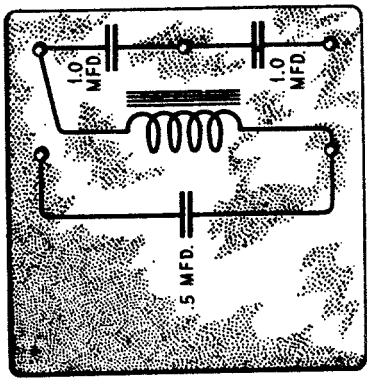

Internal connections of condensers.

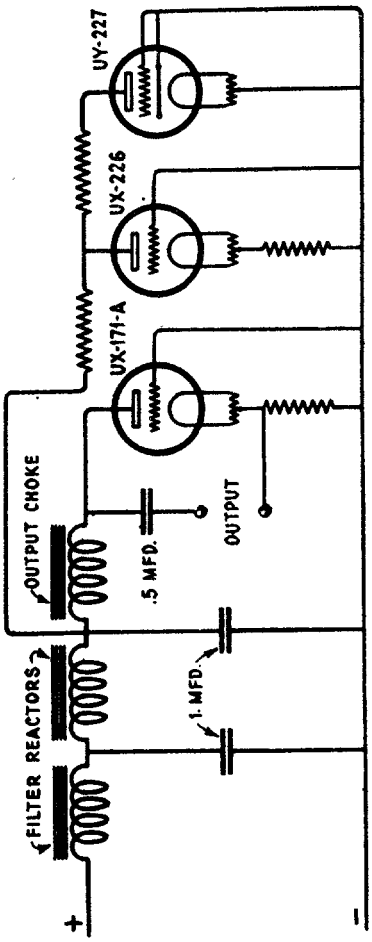

Schematic circuit illustrating method of obtaining grid and plate voltages.

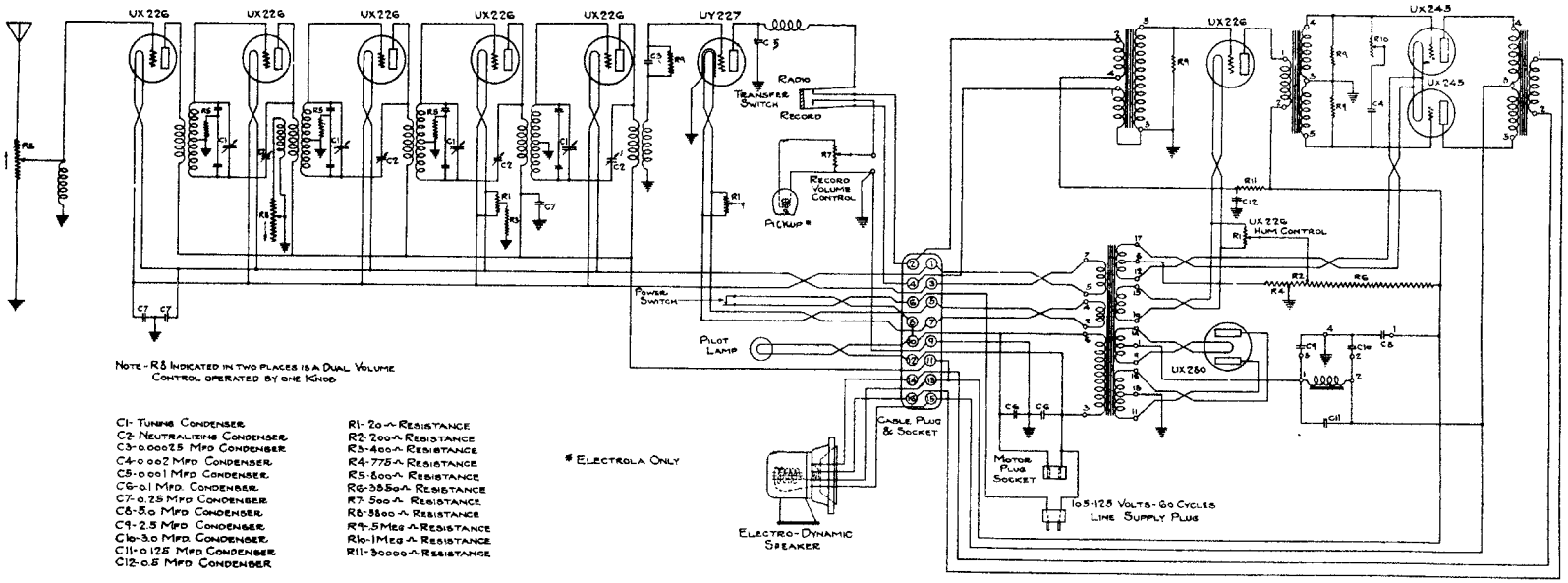

Schematic Wiring Diagram Victor Radio and Victor Radio with Electrola
Model R-32, R-52, RE-45, RE-75

GENERAL TESTS

1. EXCESSIVE HUM—This condition can be caused by:

a. Improperly adjusted or faulty hum controls. See subject 4, under Installation.
b. Defective UX-280 or UY-227.
c. Wire or terminal grounded to the frame, or open circuit in any of the various ground connections.
d. Shorted condenser, 10, Fig. 1, across UX-226 filament supply.
e. Open or shorted center tap resistor, 43, Fig. 1, across UX-226 filament supply.
f. Shorted condenser, 64, Fig. 3, across power line in power-amplifier unit.
g. Shorted condenser in condenser bank, 56, Fig. 2, of power-amplifier unit.

2. HOWL—Microphonic howl can be traced to:

a. Defective Radiotron, particularly in the detector or audio stages.
b. Improper neutralization. See subject 1 under Special Adjustments below.
c. Speaker not felt insulated from baffle. Remove speaker and arrange felt properly.
d. Open condenser, 15, Fig. 1.
e. Loose metal parts such as shielding, screws, etc., or improperly centered cone may set up a howl or mechanical rattle. See subject 2 under Special Adjustments for method of centering cone.

3. DISTORTED REPRODUCTION—Distortion may be caused by any of the following:

a. Low emission Radiotron, particularly in the detector or in the power supply unit. For best reproduction the plate currents of the two UX-245 should balance within 2 milliamperes.
b. Operation with volume control advanced too far on powerful local stations, causing overloading of the detector.
c. Incorrect setting of the tone control in the base of the power-amplifier. See subject 5, under Installation.
d. Improper neutralization. See subject 1, under Special Adjustments.
e. Cone in speaker unit improperly centered. See subject 2 under Special Adjustments.

4. NOISY REPRODUCTION—Station carrier noise, static, and power line disturbances should not be confused with noise which is set up within the receiver. This latter condition may be caused by any one of the following:

a. *Volume Control.* Dirt or corrosion on the resistance wire or contact arms of the volume control will produce noise when the control is operated. This condition can usually be corrected by rubbing the parts lightly with very fine sandpaper and then cleaning with gasoline.
b. *Shorted Tuning Condenser.* If the plates of one or more of the tuning condensers are shorted, noise will be produced when the tuning lever is operated. If such a condition is found, the faulty condenser should be replaced.
c. *Intermittent short or open circuit* in any of the various soldered connections or in power switch.
d. *High resistance grid leak.* Any of the grid leaks which have developed an excessive high resistance will produce a "frying noise."
e. *Faulty power or audio transformer* will also produce this same type noise.

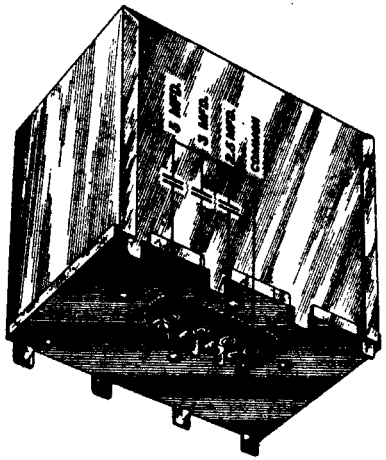

Internal Connections of Filter Condenser Bank

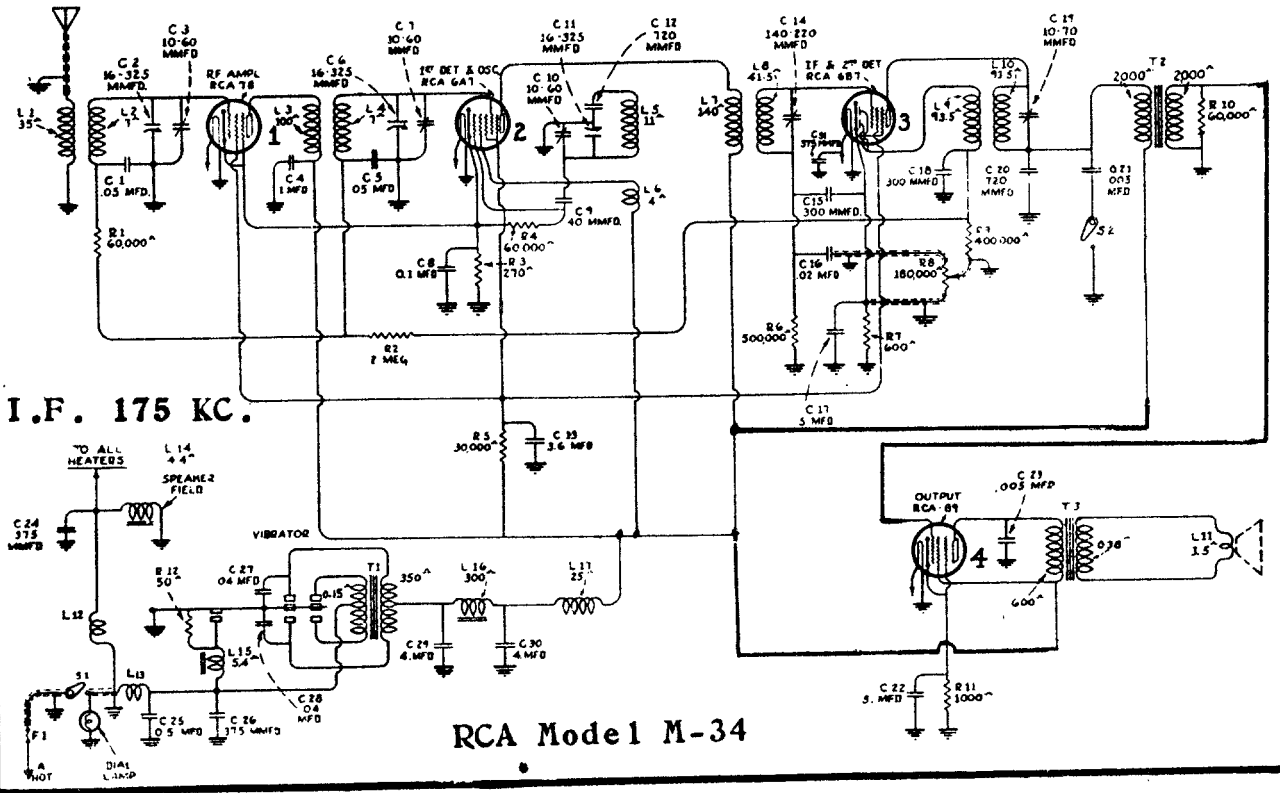

RCA Model M-34

MAXIMUM VOLUME CONTROL SETTING—NO SIGNAL

Radiotron No.	Cathode to Control Grid, Volts	Cathode to Screen Grid, Volts	Cathode to Plate, Volts	Plate Current, M. A.	Heater Volts
1. RCA-58 R. F. Amplifier	3.0	95	250	5.0	2.33
2. RCA-2A7 First Detector Oscillator	3.0	95	250	3.0	2.33
3. RCA-57 Second Detector	6.0	89	170	0.3	2.33
4. RCA-2A5 Power Amplifier	18.0	235	220	32.0	2.33
5. RCA-80 Rectifier	275 Volts PLATE TO PLATE—60 M. A. TOTAL				4.82
TOTAL CATHODE CURRENT—11 M. A.					

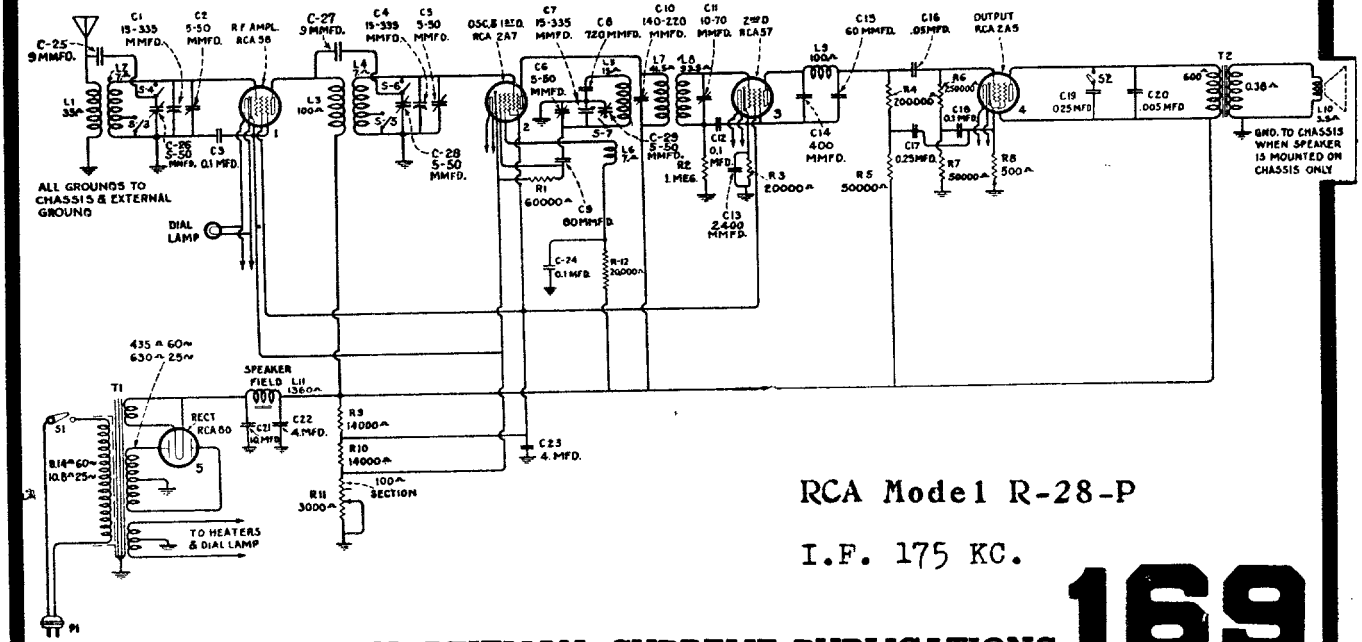

RCA Model R-28-P

I.F. 175 KC.

VICTOR MICRO-SYNCHRONOUS RADIO

R-35, R-39, RE-57

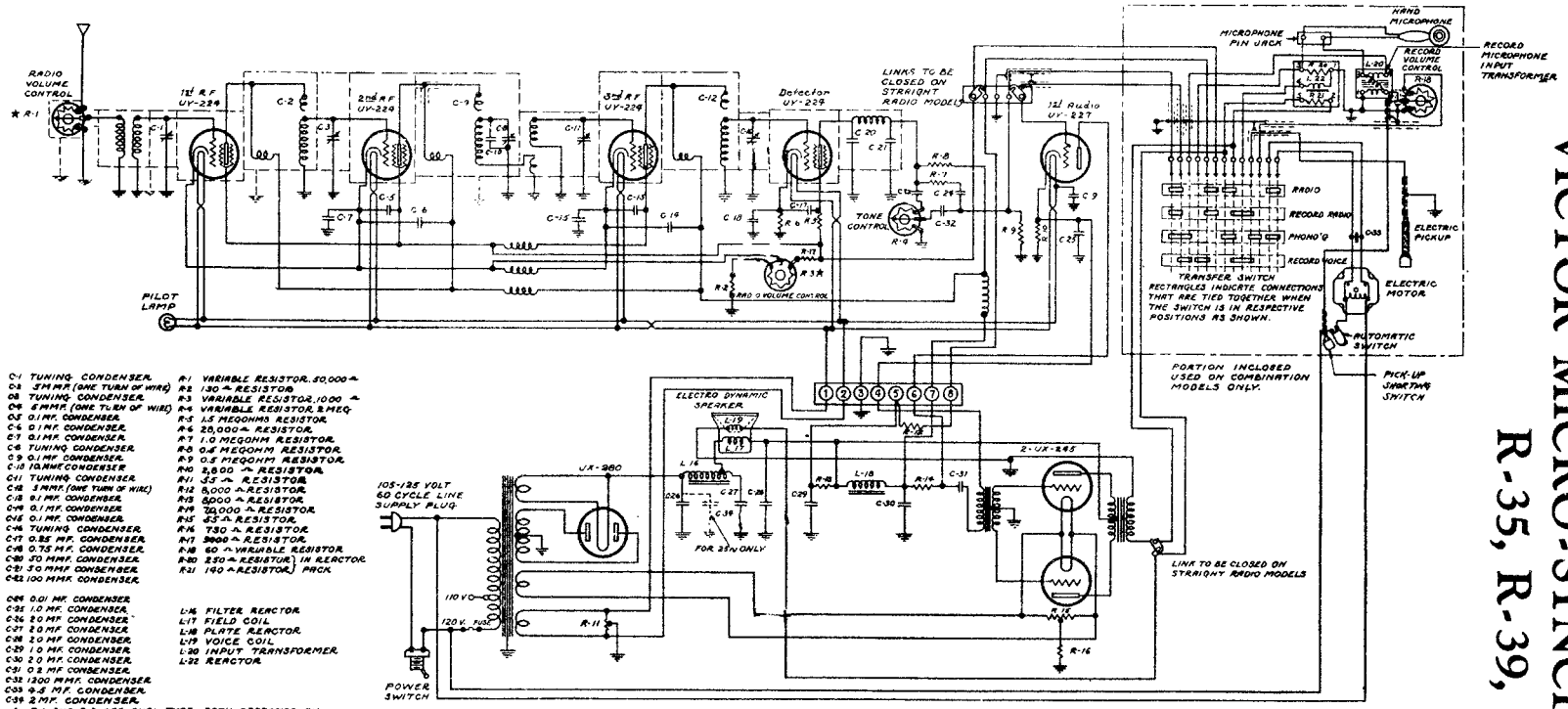

NOTE—Broken lines along wires indicate grounded shielding.

Schematic Wiring Diagram Victor Mico-Synchronous Radio, Models R-35, R-39, and RE-57.

TEST BETWEEN TERMINALS	PART	APPROXIMATE VOLTAGE (10 V SCALE)	APPROXIMATE RESISTANCE (OHMETER)
F and 7 of Terminal Board	Tapped Choke	8.4 Volts	300 Ohms
4 and 6 of Terminal Board	Speaker Field	7.2 Volts	1,500 Ohms
Brown-Grey Resistor	8000 Ohm Resistor	3.4 Volts	8,000 Ohms
Brown-Grey Resistor	8000 Ohm Resistor	3.4 Volts	8,000 Ohms
Green-Red Resistor	70,000 Ohm Resistor	.5 Volts	70,000 Ohms
7 and 8 of Condenser Bank	Plate Choke	4.0 Volts	6,000 Ohms
2 of Condenser Bank and 4 of Terminal Strip	Primary Interstage Transformer	6.4 Volts	2,000 Ohms
UX-245 Grids	Secondary Interstage Transformer	2.4 Volts	14,000 Ohms
UX-245 Grids to Chassis	One-half Secondary Interstage Transformer	2.4 Volts 3.6 Volts	5,500 Ohms 7,500 Ohms
UX-245 Plates	Primary Output Transformer	8.4 Volts	330 Ohms
UX-245 Plates and No. 3 of Condenser Bank	One-half Primary Output Transformer	8.8 Volts	165 Ohms
Voice Coil	Speaker Voice Coil	9.0 Volts	0 Ohms
14 and 15 of Terminal Board	Primary Power Transformer	9.0 Volts	0 Ohms
P and P	High Voltage Secondary Output Transformer	8.4 Volts	340 Ohms
F and F	UX-280 Filament Secondary Output Transformer	9.0 Volts	0 Ohms

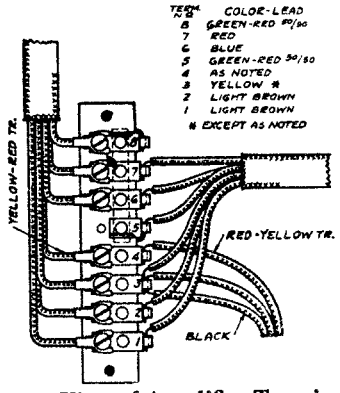

Top View of Amplifier Terminal Strip.

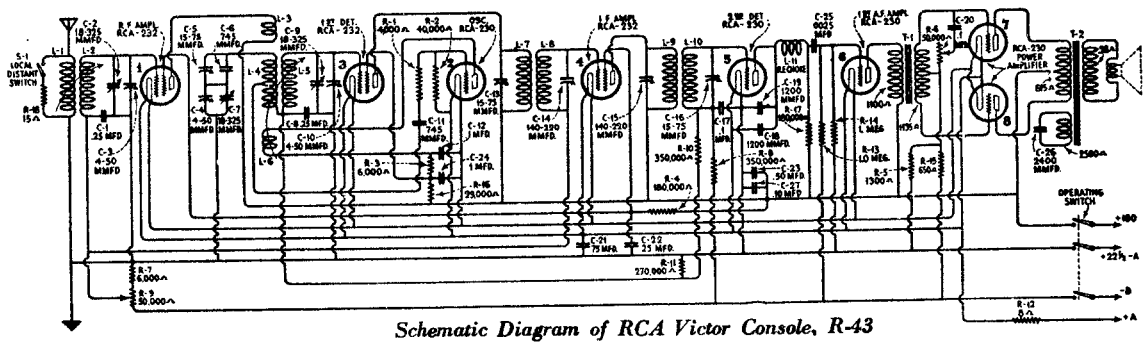

Schematic Diagram of RCA Victor Console, R-43

Tube No.	Filament to Control Grid Volts	Filament to Screen Grid Volts	Filament to Plate Volts	Plate Current M. A.	Filament Volts
VOLUME CONTROL AT MINIMUM					
1	22	55	155	0	2.0
2	—	—	50	3.0	2.0
3	0.5	65	150	0.5	2.0
4	22	55	155	0	2.0
5	5.0	—	90	0	2.0
6	2.0	—	150	2.5	2.0
7	15.0	—	150	0.5	2.0
8	15.0		150	0.5	2.0
VOLUME CONTROL AT MAXIMUM					
1	1.5	45	150	2.5	2.0
2	—	—	50	3.0	2.0
3	0.5	60	150	0.5	2.0
4	1.5	45	150	2.5	2.0
5	5.0	—	90	0	2.0
6	2.0	—	150	2.5	2.0
7	15.0	—	150	0.5	2.0
8	15.0	—	150	0.5	2.0

RCA Victor R-17-M

Radiotron No.	Cathode or Filament to Control Grid Volts	Cathode or Filament to Screen Grid Volts	Cathode or Filament to Plate Volts	Plate Current M. A.	Filament or Heater Volts
1. RCA-39 R. F.	3.0	105.0	105	7.0	6.0
2. RCA-36 Detector	*0.75	11.0	*60	0.025	6.0
3. RCA-38 Output	11.0	100.0	95	5.0	6.0
4. RCA-37 Rectifier	——	——	115	15.0	6.0

*Impossible to measure on ordinary voltmeter.

All Voltages on D. C. will be slightly lower

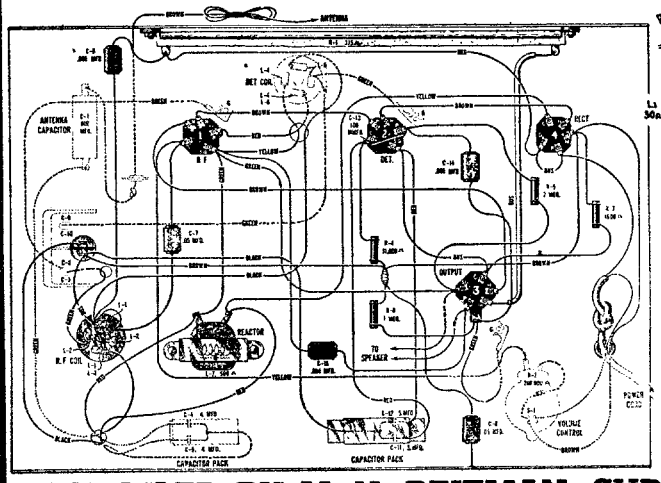

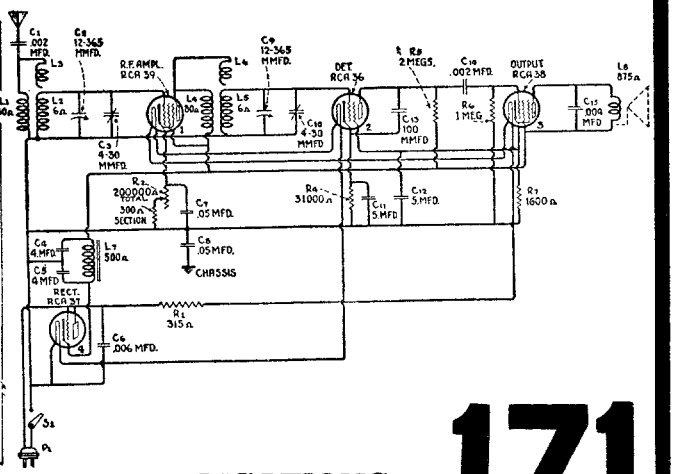

RCA RADIOLAS 44 and 46

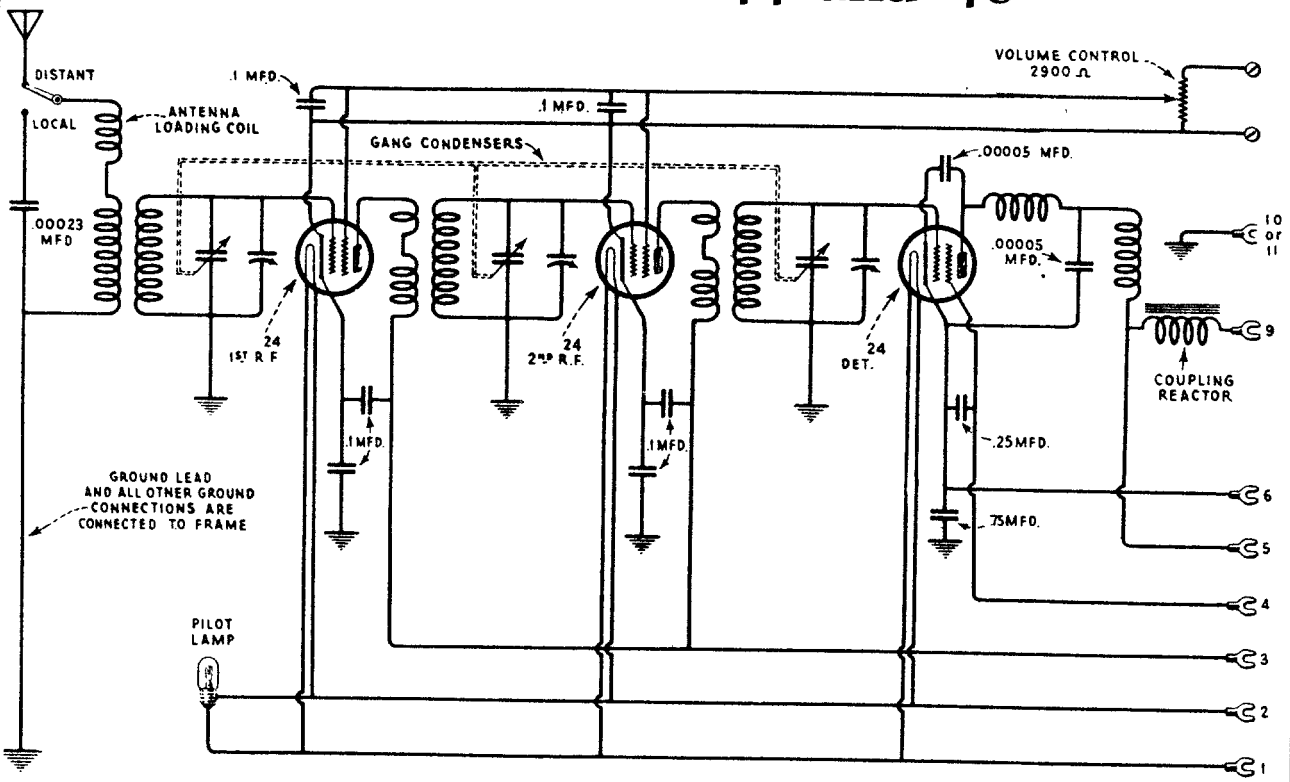

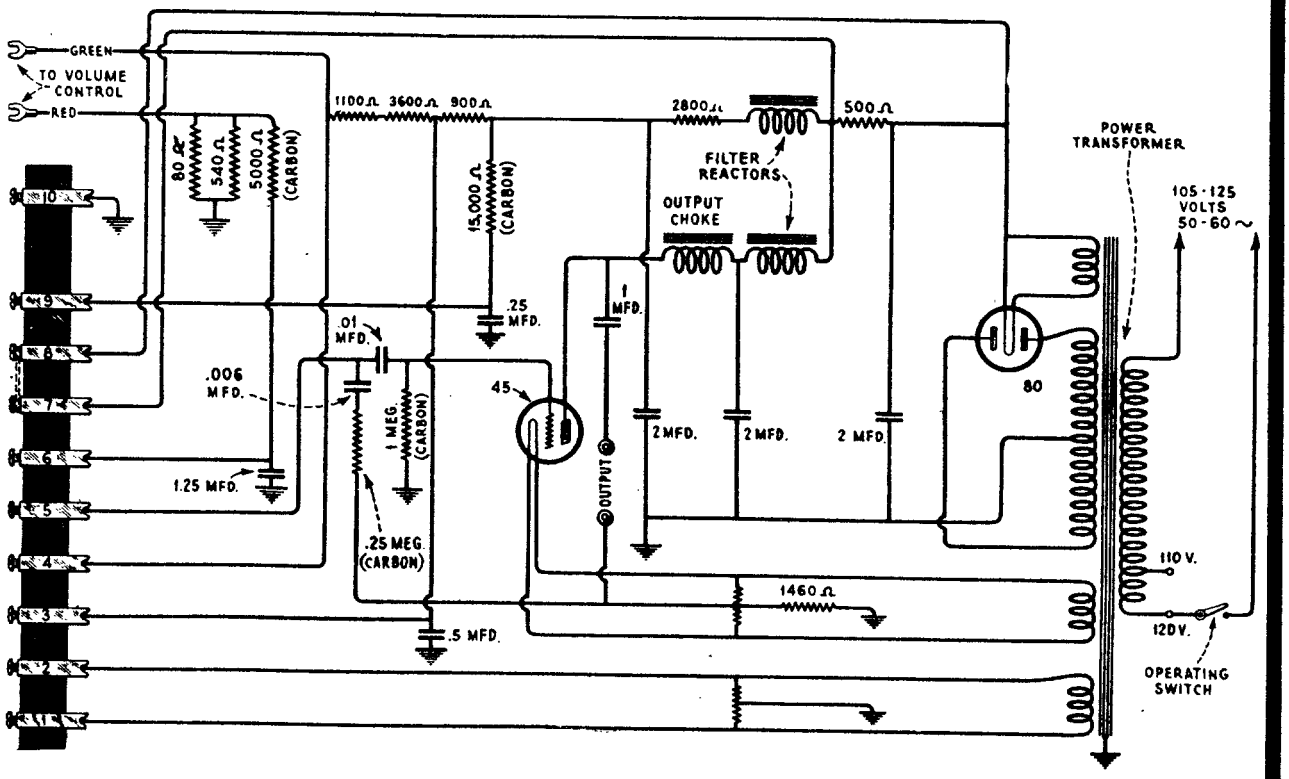

MANUAL OF MOST-OFTEN-NEEDED RADIO DIAGRAMS

Radiola 47

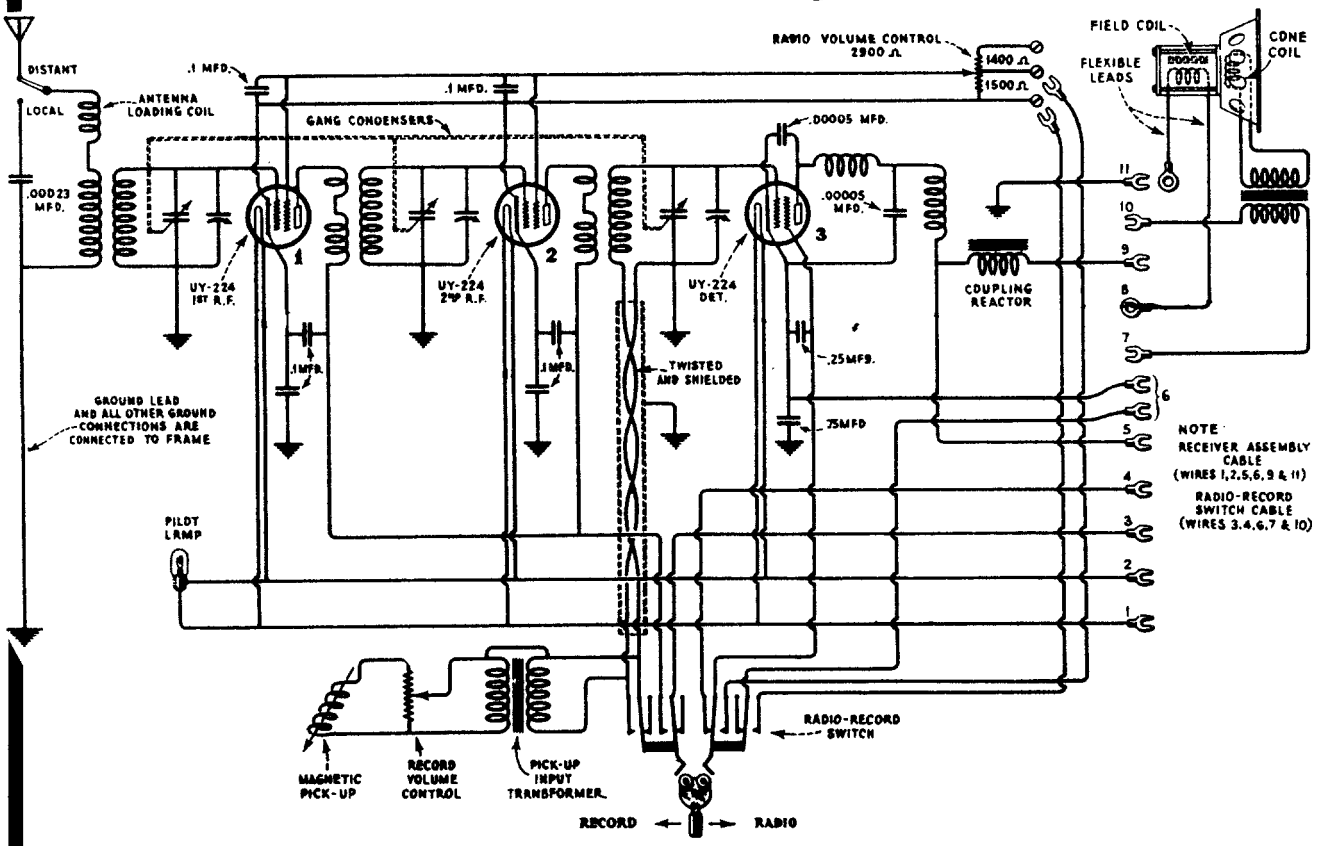

Schematic circuit diagram of receiver, phonograph pick-up and reproducer

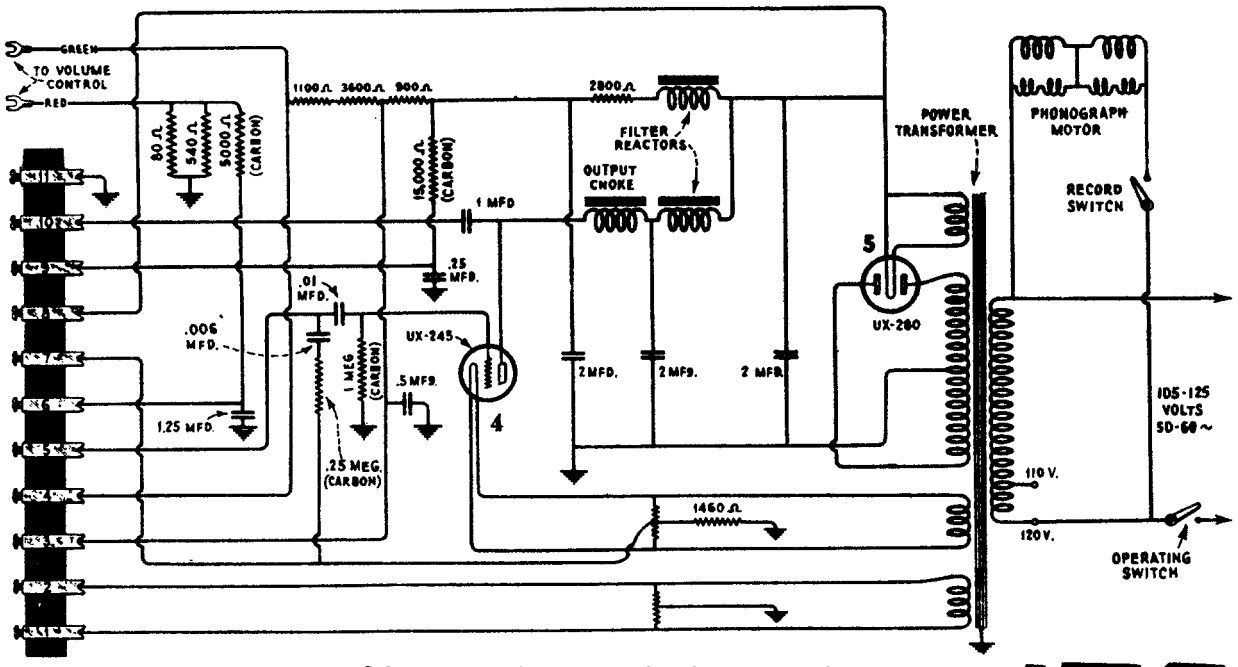

Schematic circuit diagram of socket power unit

COMPILED BY M. N. BEITMAN, SUPREME PUBLICATIONS

RCA RADIOLA 48

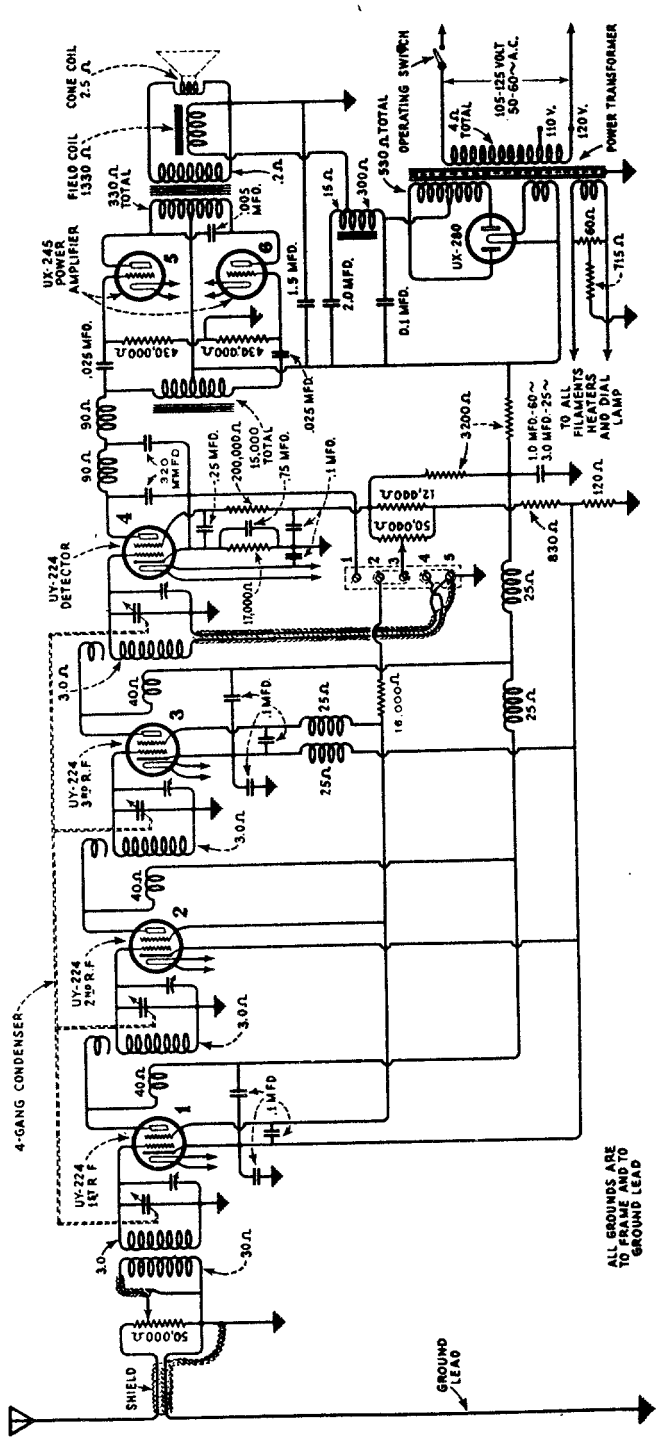

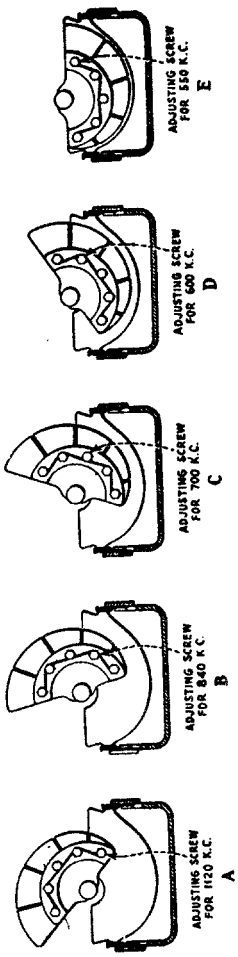

Gang condenser adjustment positions.

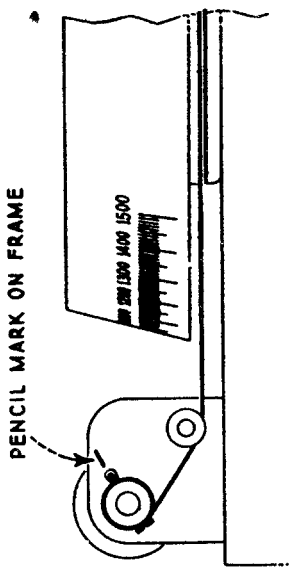

View showing method of checking position of dial.

COMPILED BY M. N. BEITMAN, SUPREME PUBLICATIONS

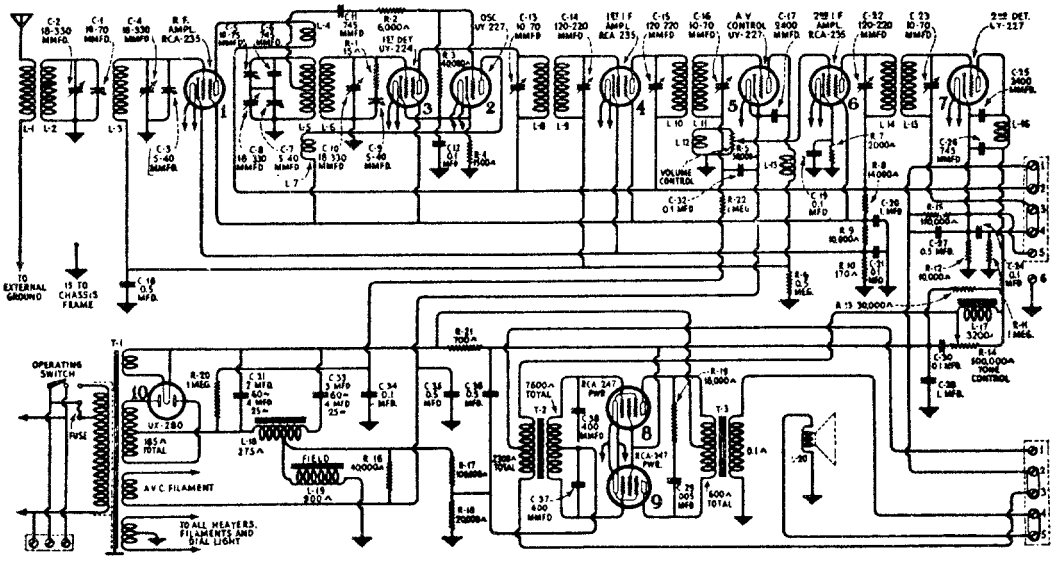

RCA Models R-50, R-55 I.F. 175 KC.

MODELS 94BK2 and 94BT2

Chassis No. RC-390 RC-390

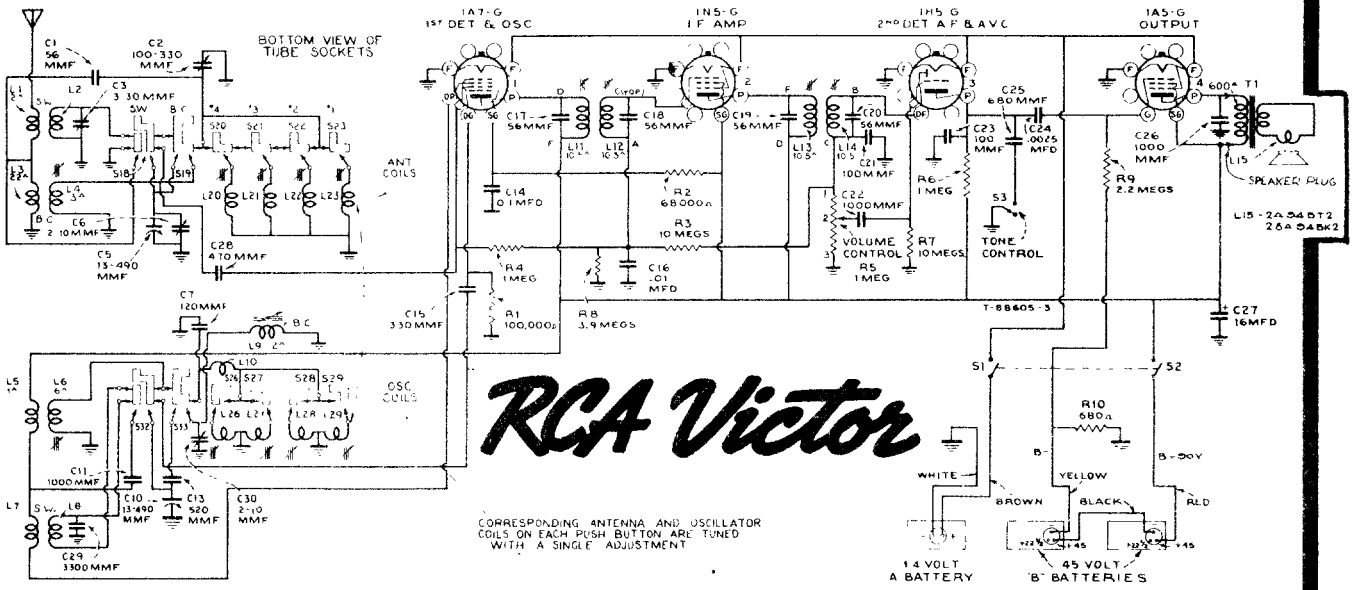

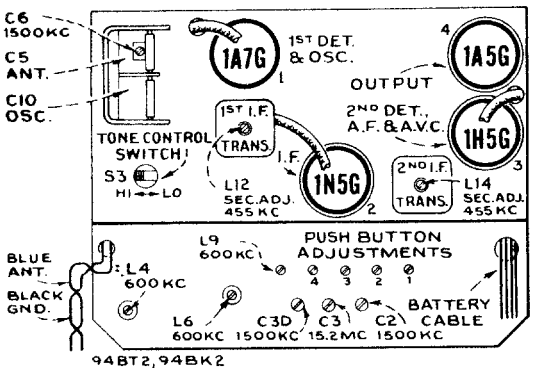

Tube and Trimmer Locations

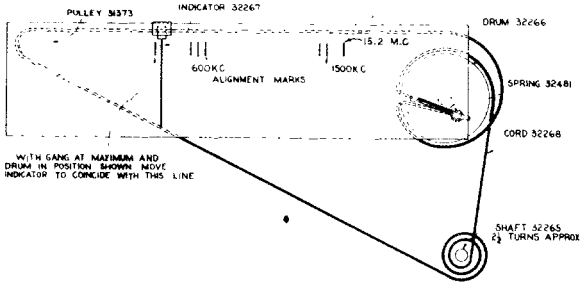

Dial Drive Hookup and Alignment Marks

RCA RADIOLA 60

(105-125 Volts. 50-60 Cycle A. C.)

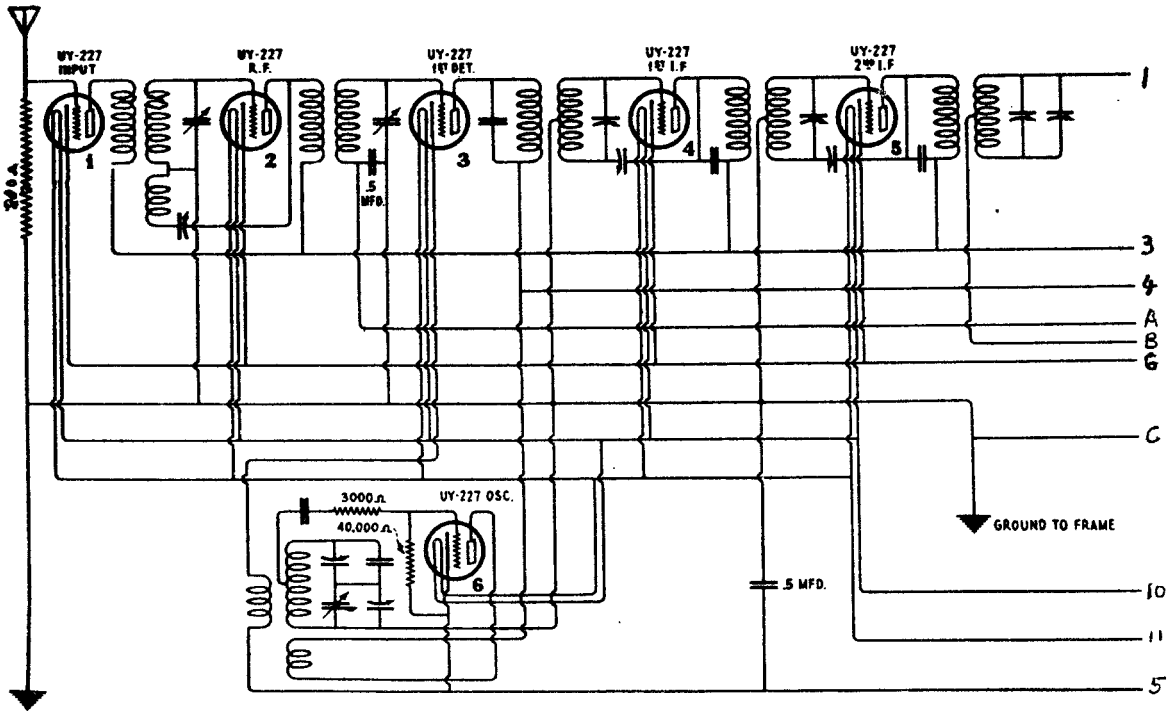

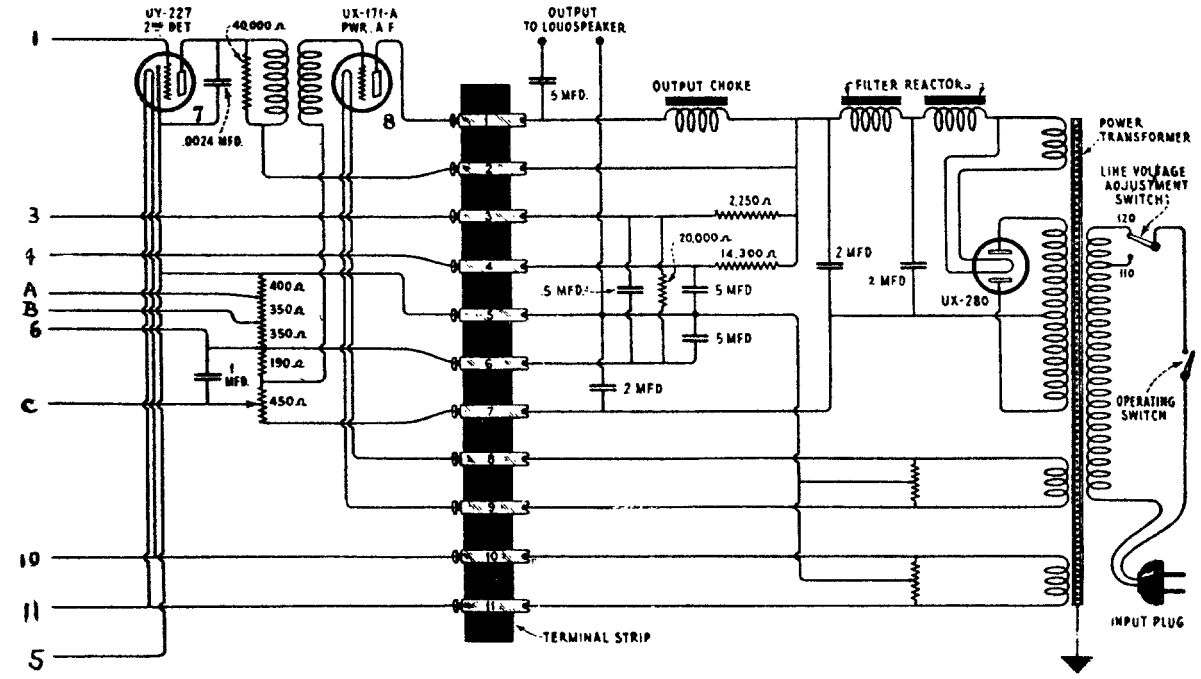

I.F. 180 KC.

COMPILED BY M. N. BEITMAN, SUPREME PUBLICATIONS

RCA Radiola 80, 82, 86

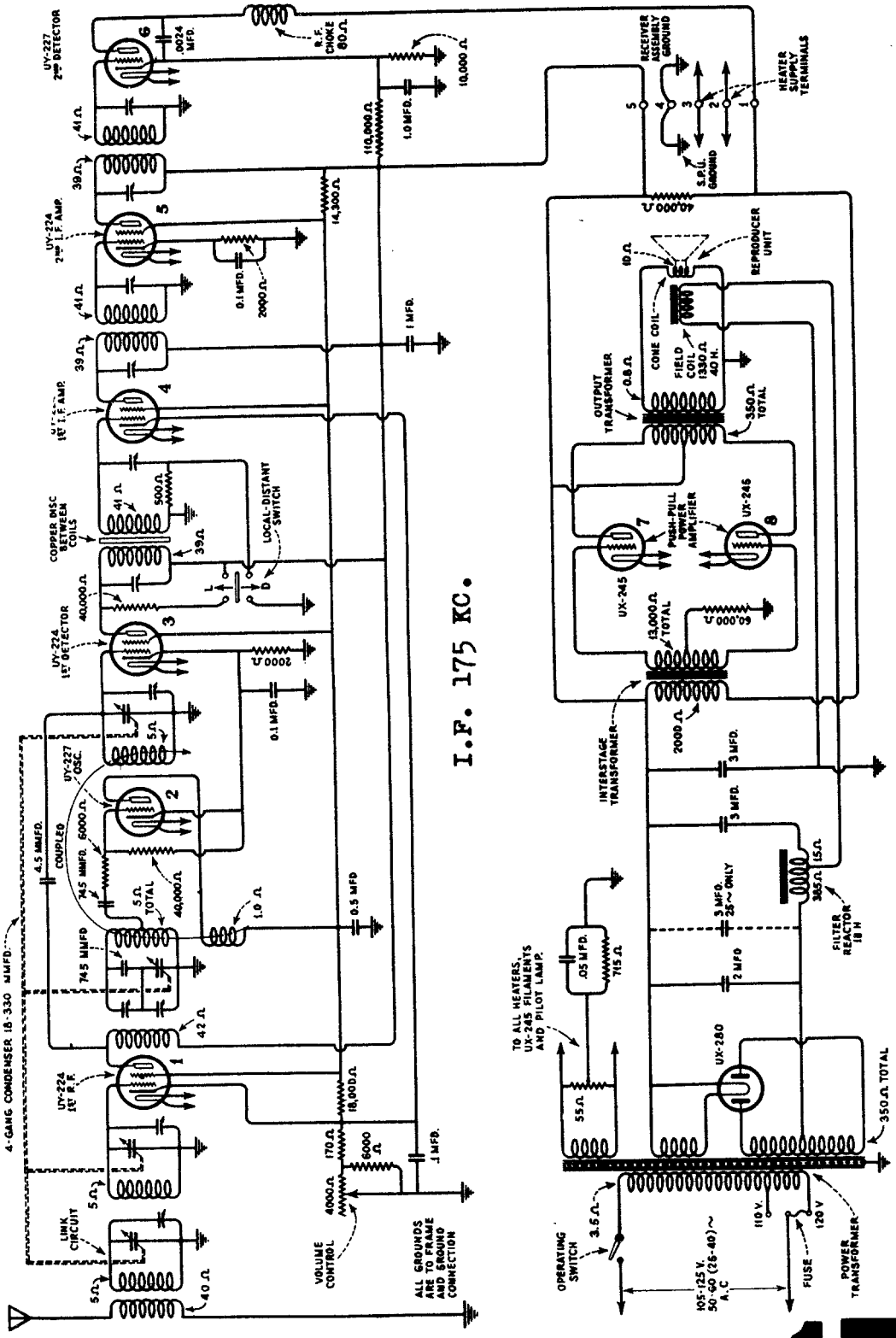

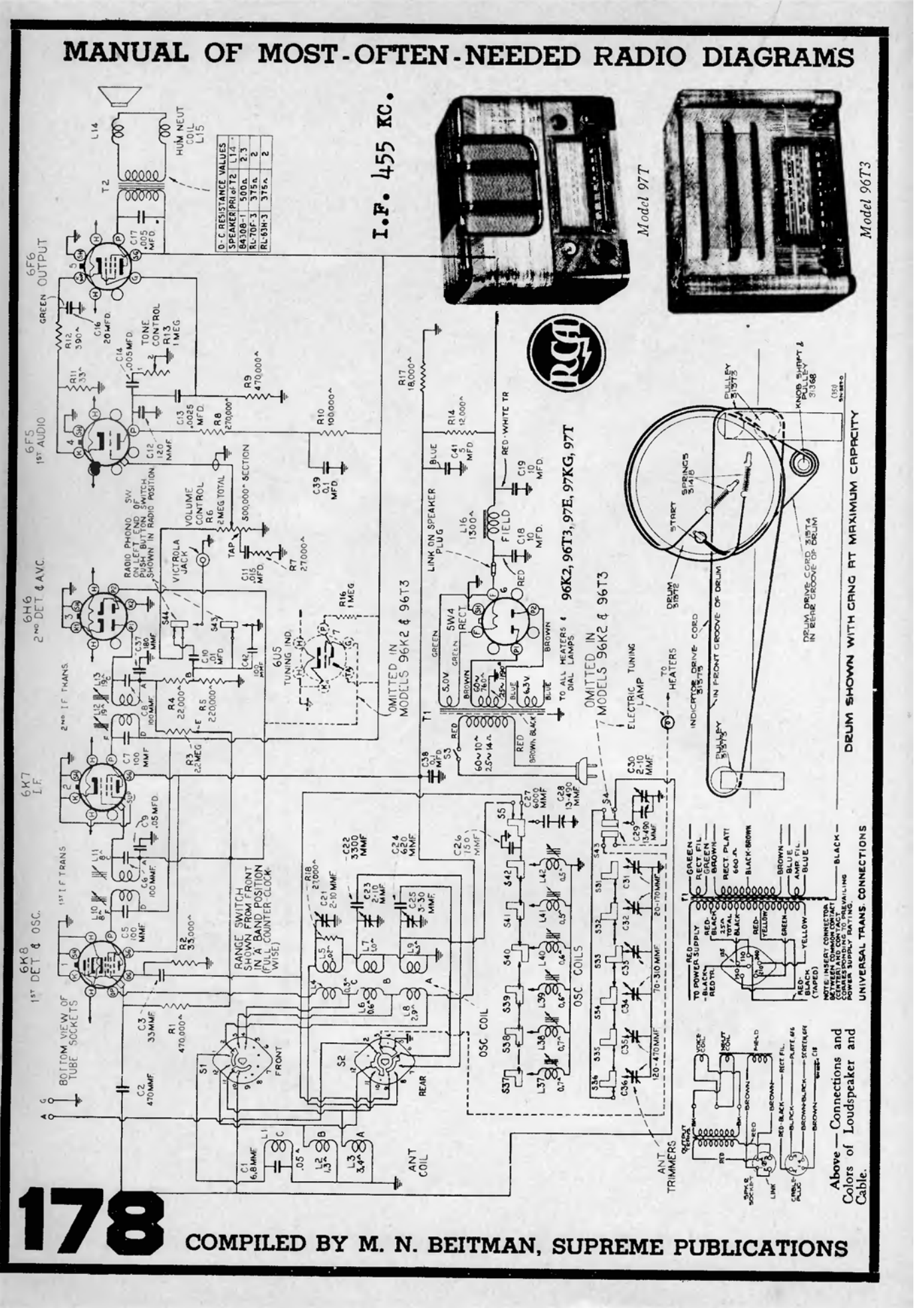

Above — Connections and Colors of Loudspeaker and Cable.

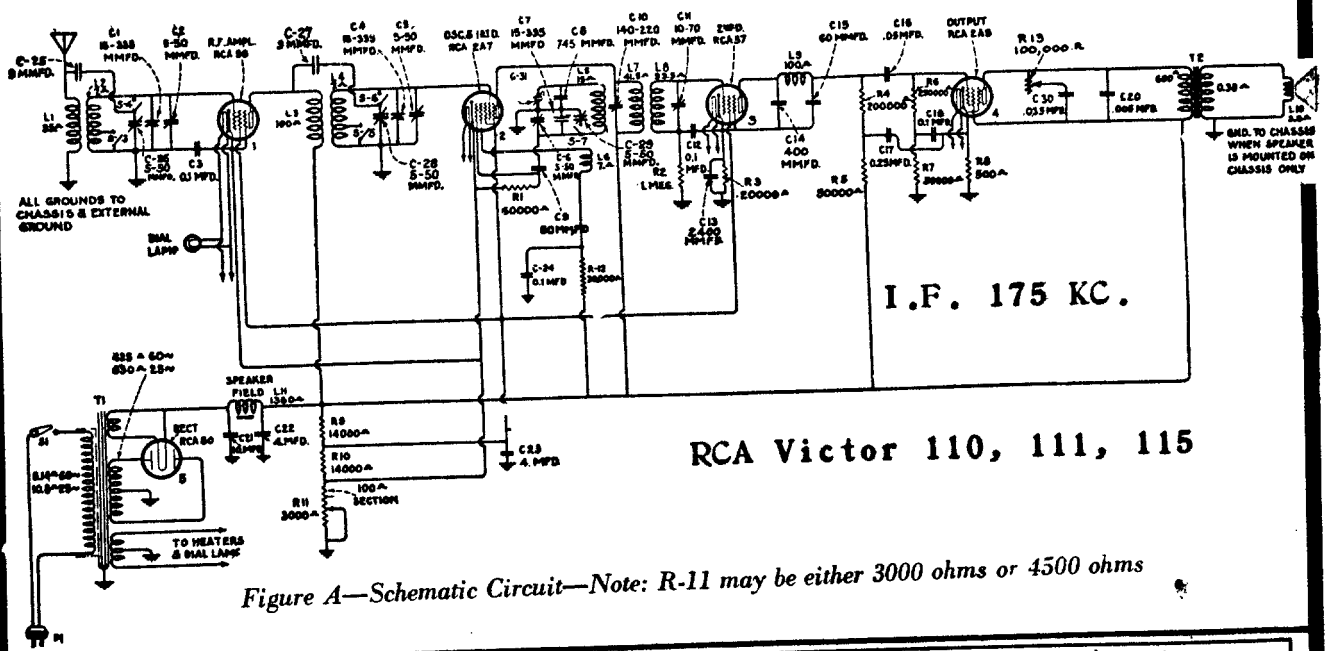

Figure A—Schematic Circuit—Note: R-11 may be either 3000 ohms or 4500 ohms

Radiotron No.		Cathode to Control Grid, Volts D. C.	Cathode to Screen Grid, Volts, D. C.	Cathode to Plate, Volts D. C.	Plate Current, M. A.	Heater or Filament, Volts
RCA-6A7	First Detector	1.25	70	235	2.5	6.3
	Oscillator	—	—	180	3.5	
RCA-6F7	I. F.	1.25	70	235	5.5	6.3
	Second Detector	19	—	145*	0.4	
RCA-41 Output		17	240	230	26.5	6.3
RCA-1-V Rectifier		—	—	335 RMS	50	6.3

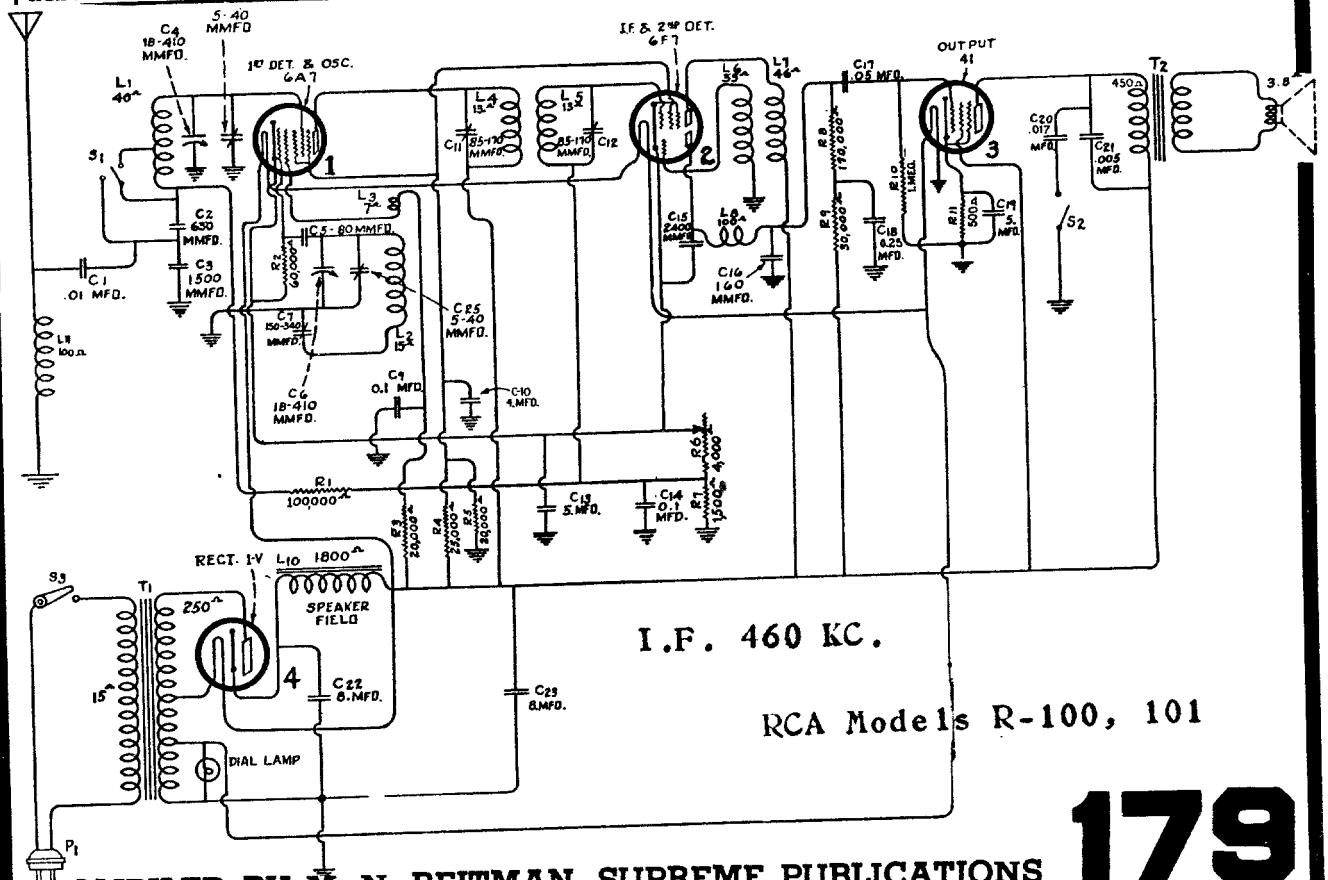

MANUAL OF MOST-OFTEN-NEEDED RADIO DIAGRAMS

RCA Victor 114

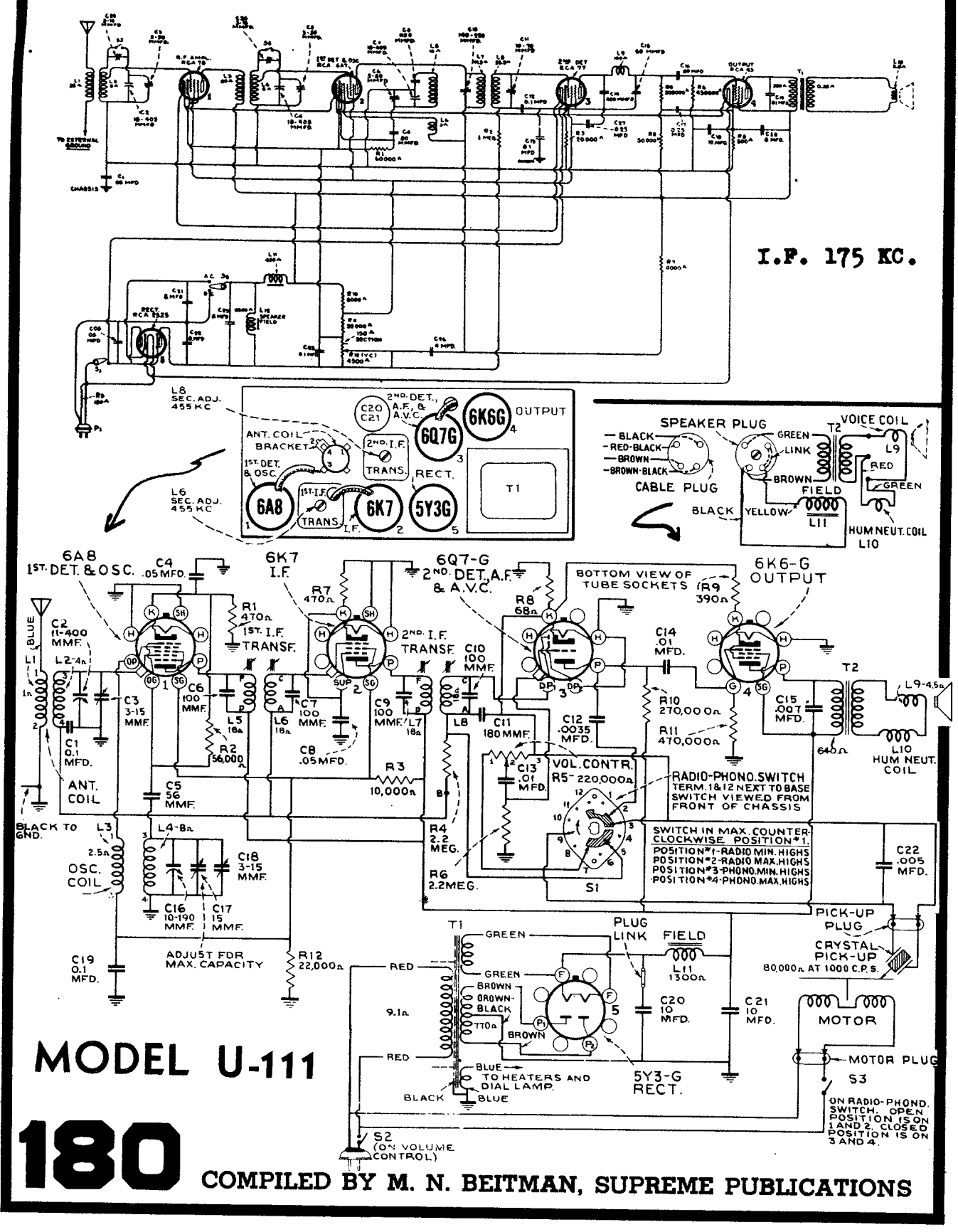

MODEL U-111

180

COMPILED BY M. N. BEITMAN, SUPREME PUBLICATIONS

RCA Victor 120

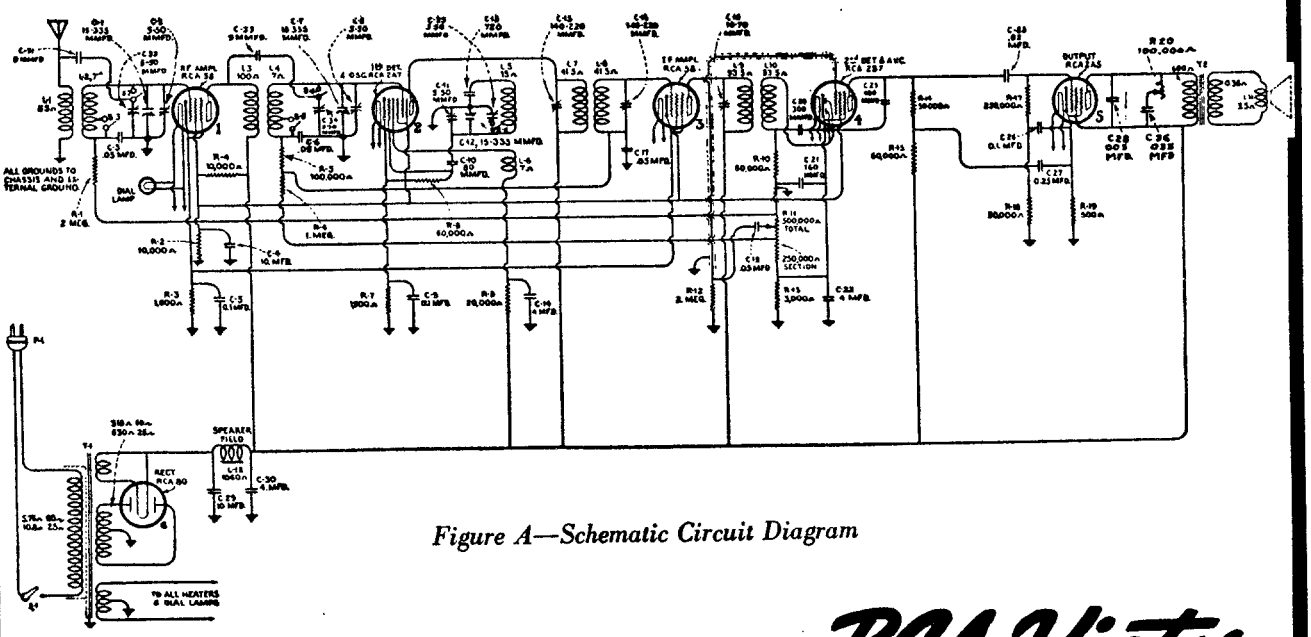

Figure A—Schematic Circuit Diagram

I.F. 175 KC.

RCA Victor

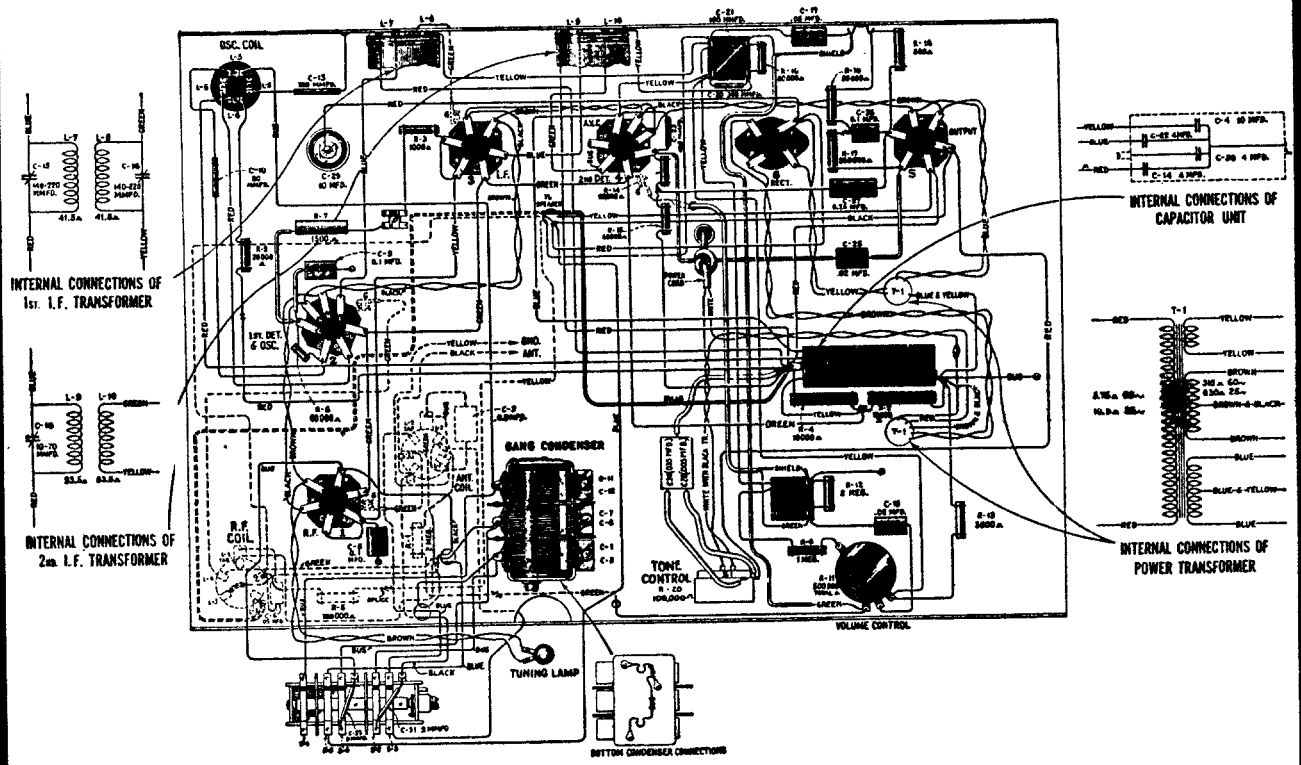

Figure B—Wiring Diagram

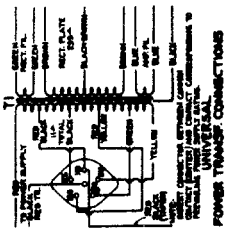

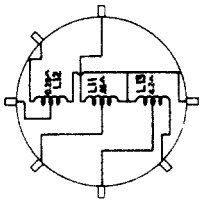

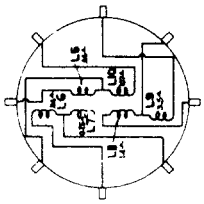

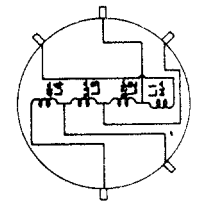

MODELS 810K, 810K1, and 810T

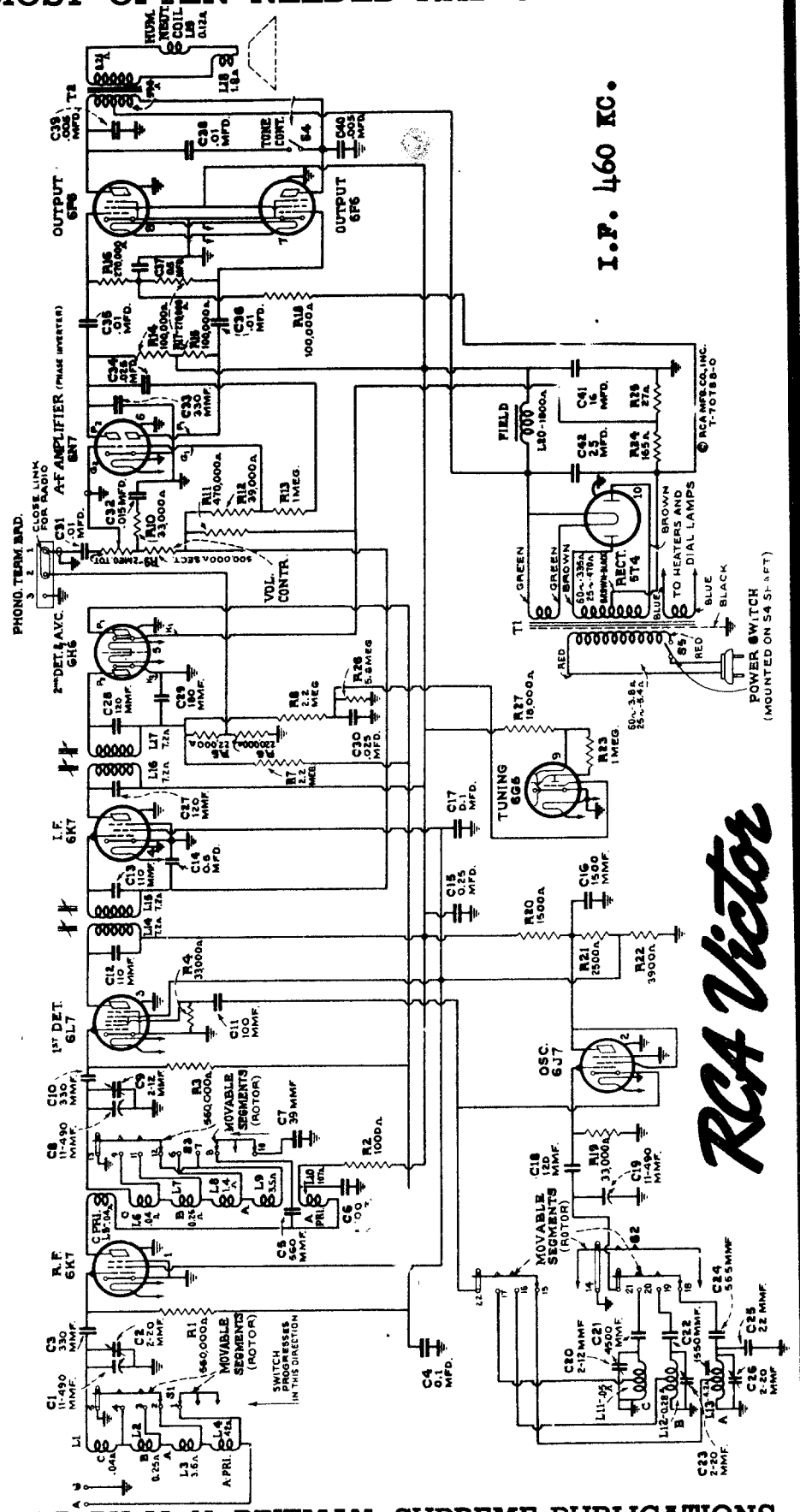

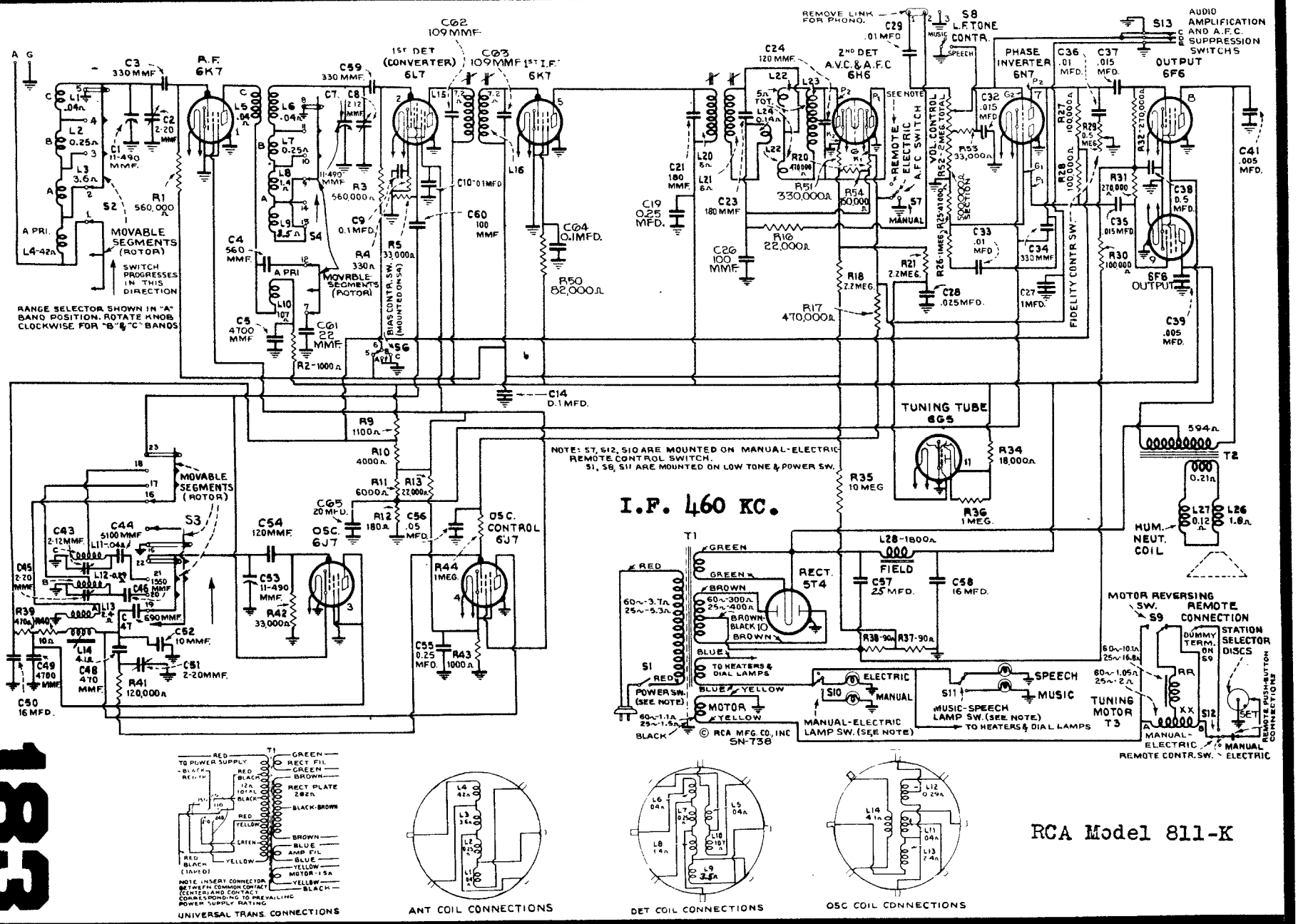

RCA Model 811-K

Sears Roebuck & Co.

MODELS: 1320 1454
(109) 1324 1456
1326X 1531
1386 7004

I.F. 175KC.

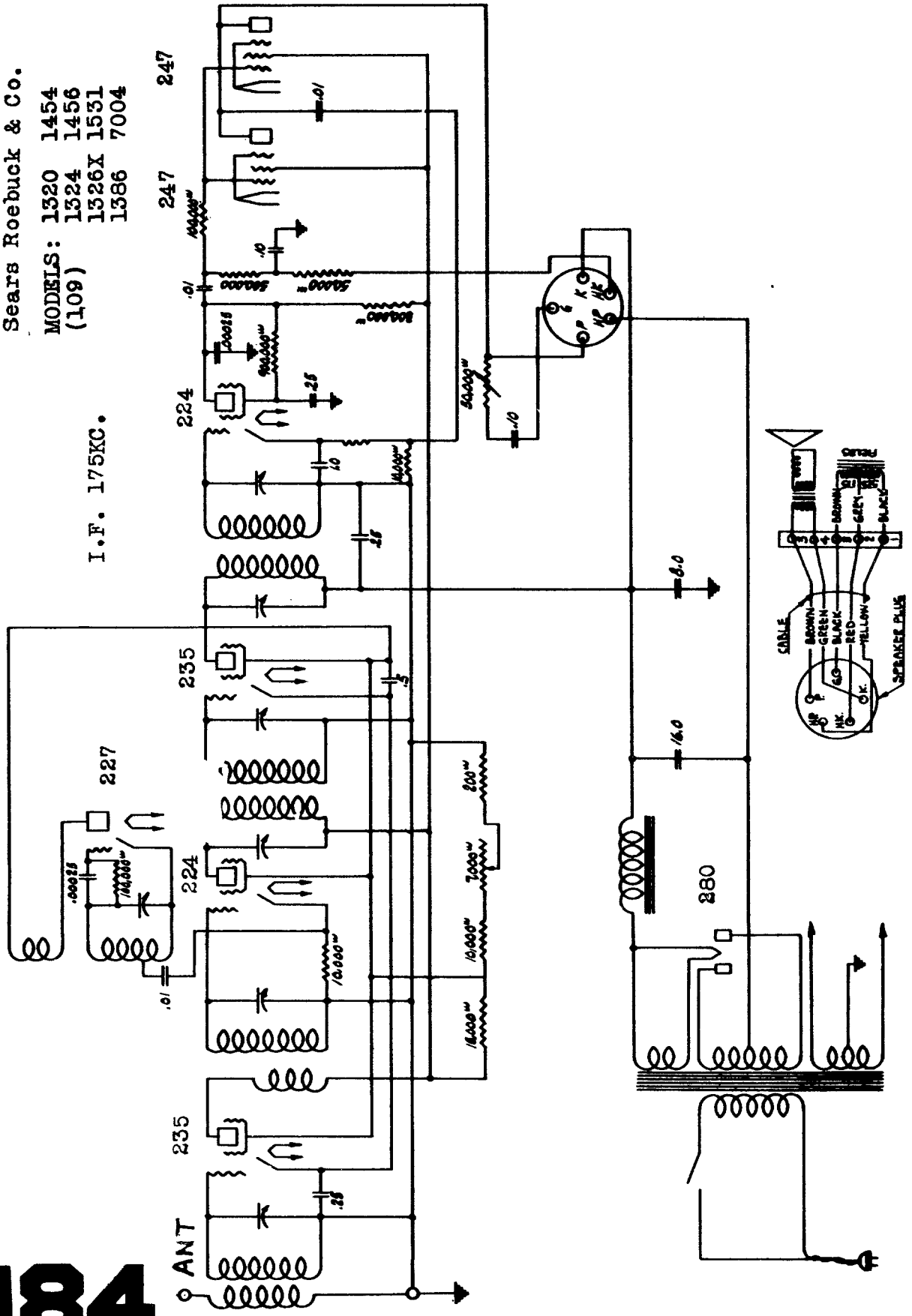

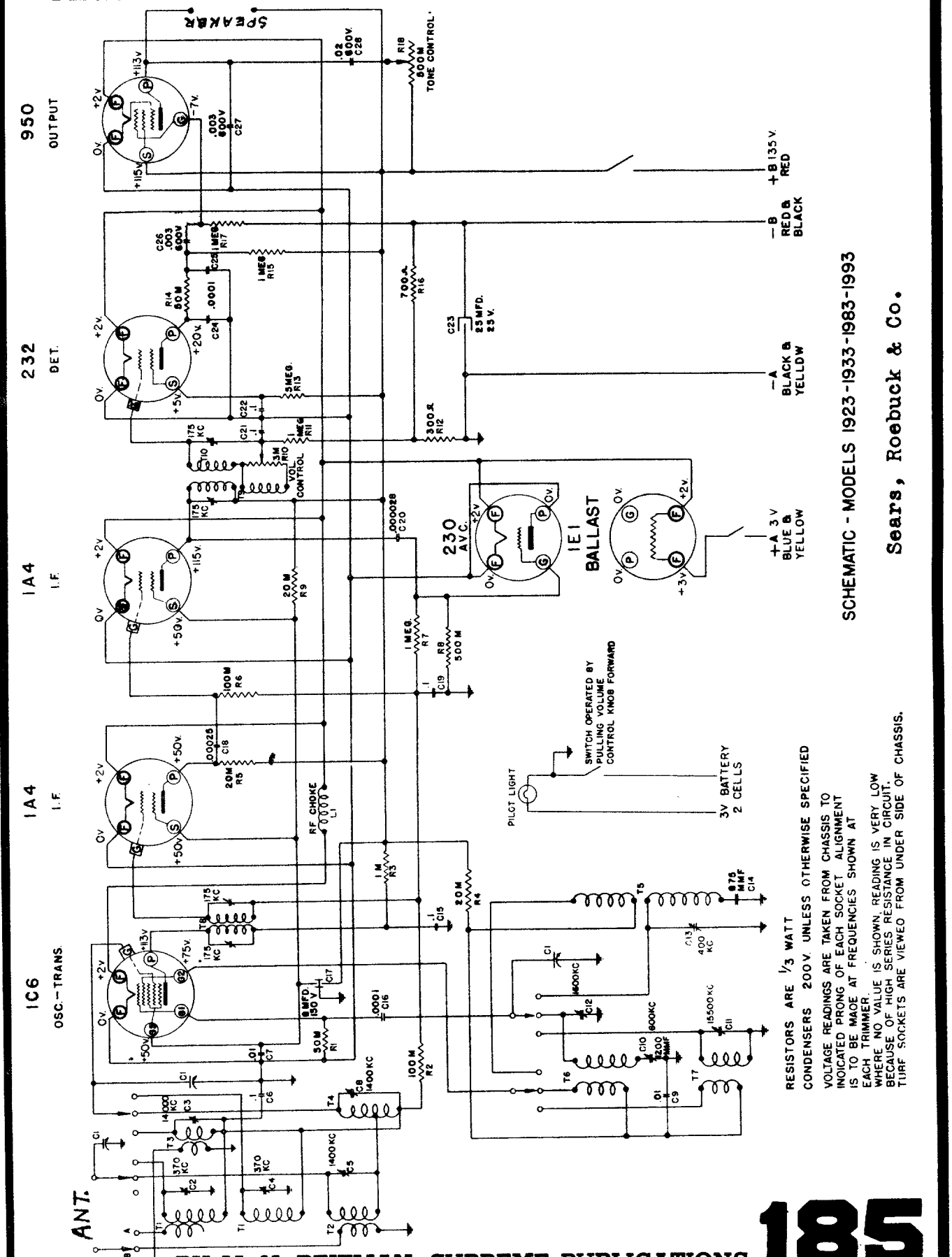

SCHEMATIC - MODELS 1923-1933-1983-1993

Sears, Roebuck & Co.

Sears Roebuck & Co.

Models: 4414, 4415, 4500, 4505, 4506, 4510, 4511

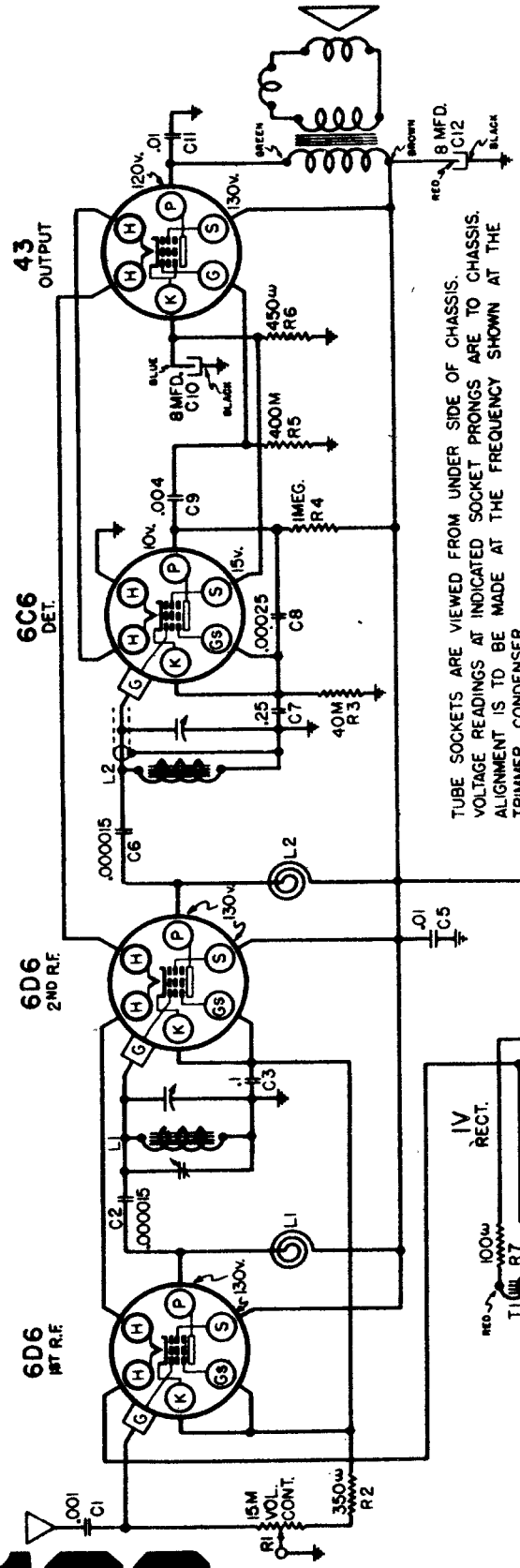

TUBE SOCKETS ARE VIEWED FROM UNDER SIDE OF CHASSIS.
VOLTAGE READINGS AT INDICATED SOCKET PRONGS ARE TO CHASSIS.
ALIGNMENT IS TO BE MADE AT THE FREQUENCY SHOWN AT THE TRIMMER CONDENSER.
WHERE NO VOLTAGE READING IS SHOWN AT SOCKET PRONG, IT INDICATES A VERY LOW READING.
VOLUME CONTROL TO BE ON FULL.

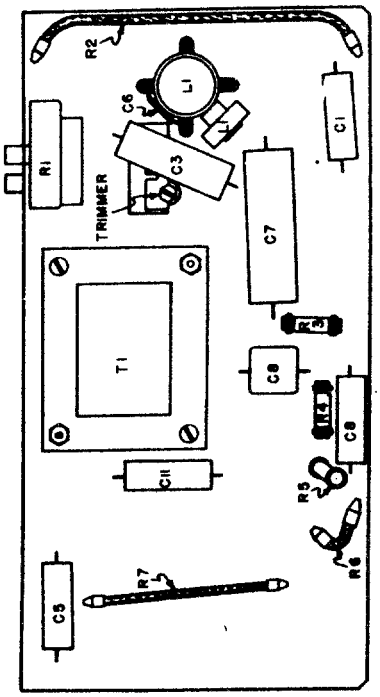

C4, C10, C12, & L1 ARE MOUNTED ON TOP OF CHASSIS.

LOCATIONS OF PARTS UNDER CHASSIS

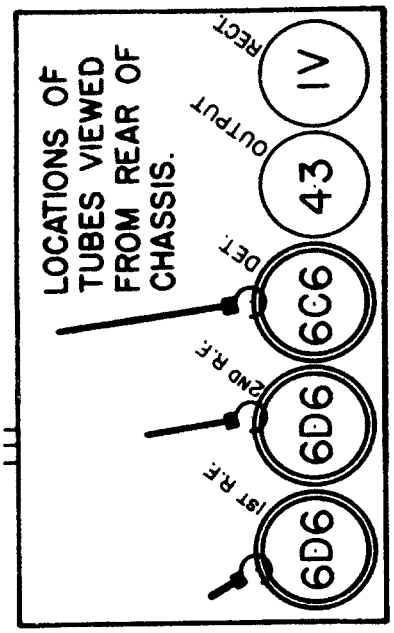

COMPILED BY M. N. BEITMAN, SUPREME PUBLICATIONS

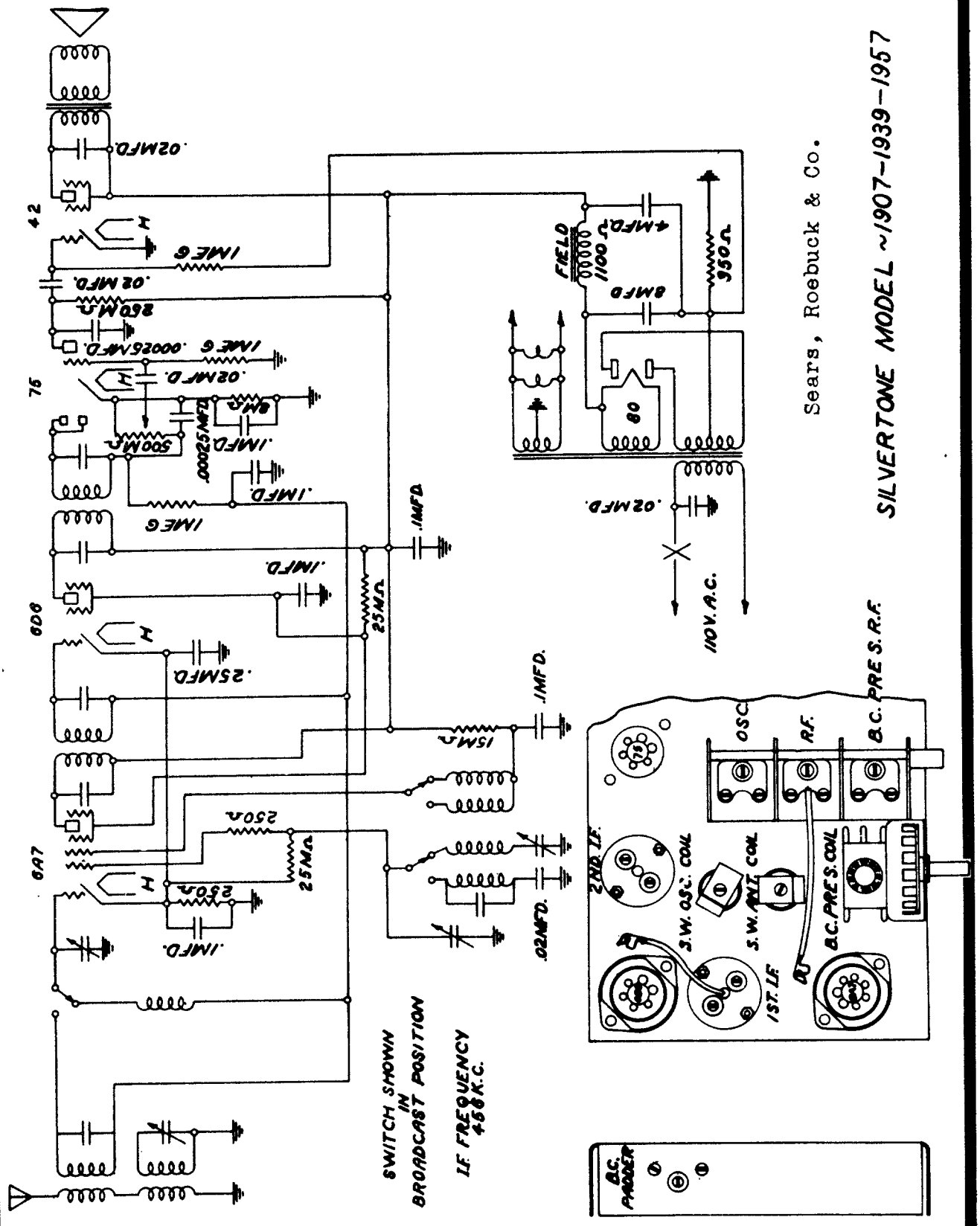
SILVERTONE MODEL ~1907-1939-1957
Sears, Roebuck & Co.
42
75
6D6
6A7
80
FIELD
1100Ω
4MFD.
8MFD
350Ω
.02MFD.
1MEG
.02MFD.
260MΩ
.00025MFD.
1MEG
.02MFD.
8MΩ
500MΩ
.00025MFD.
.1MFD.
.1MFD.
1MEG
.1MFD.
.1MFD.
25MΩ
.25MFD.
.1MFD.
15MΩ
250Ω
25MΩ
250Ω
.1MFD.
.02MFD.
110V. A.C.
OSC.
R.F.
B.C. PRE S.R.F.
2ND I.F.
S.W. OSC. COIL
S.W. ANT. COIL
B.C. PRES. COIL
1ST. I.F.
SWITCH SHOWN IN BROADCAST POSITION
I.F. FREQUENCY 456 K.C.
B.C. PADDER

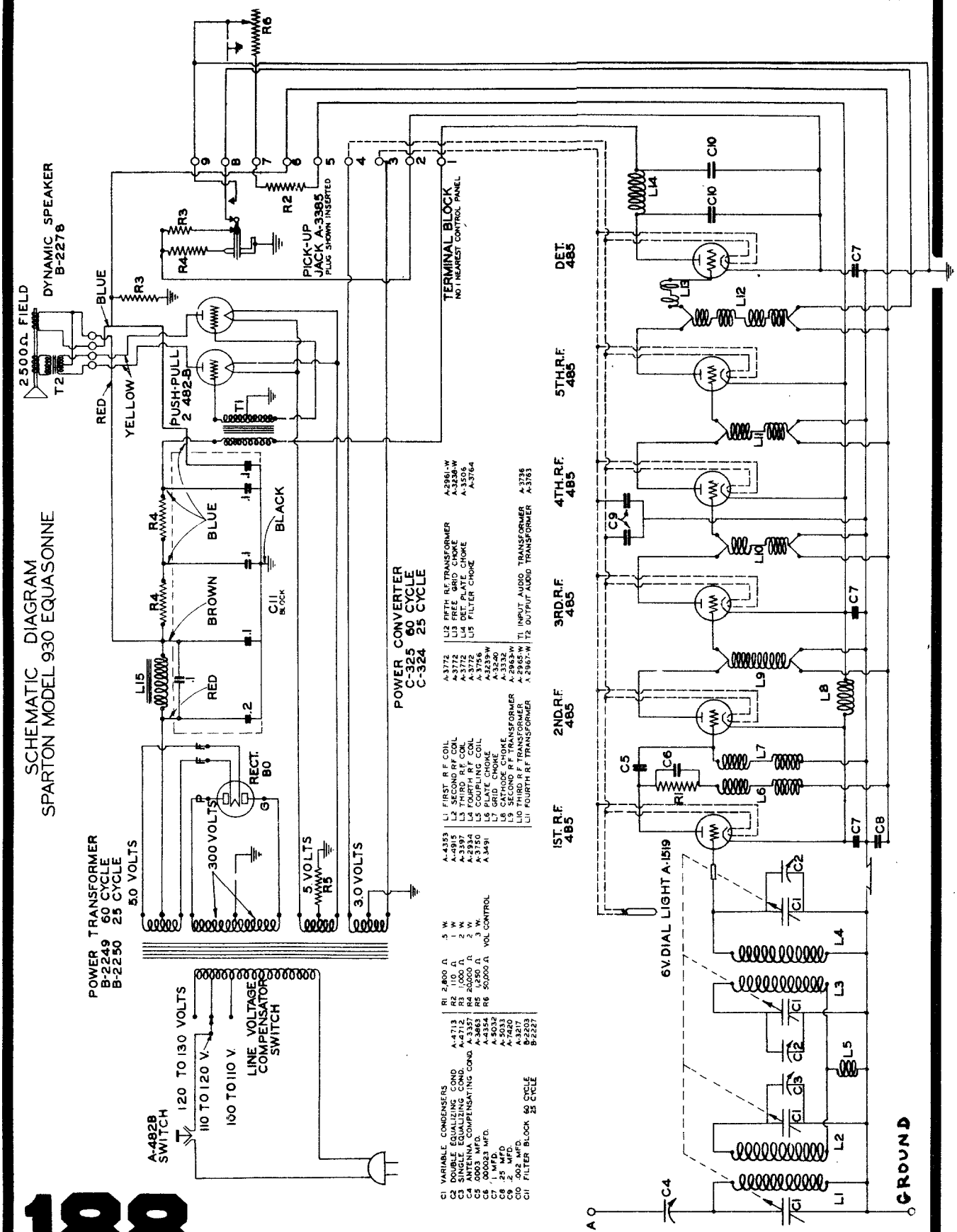
SCHEMATIC DIAGRAM
SPARTON MODEL 930 EQUASONNE
2500Ω FIELD
DYNAMIC SPEAKER B-2278
T2
BLUE
RED
YELLOW
R3
R4
R2
R6
PUSH-PULL 2 482-B
T1
PICK-UP JACK A-3385
PLUG SHOWN INSERTED
TERMINAL BLOCK
NO 1 NEAREST CONTROL PANEL
BLUE
BLACK
BROWN
RED
C11 BLOCK
L15
RECT. B0
300 VOLTS
5.0 VOLTS
5 VOLTS
3.0 VOLTS
POWER TRANSFORMER
B-2249 60 CYCLE
B-2250 25 CYCLE
POWER CONVERTER
C-325 60 CYCLE
C-324 25 CYCLE
A-482B SWITCH
120 TO 130 VOLTS
110 TO 120 V.
100 TO 110 V
LINE VOLTAGE COMPENSATOR SWITCH
C1 VARIABLE CONDENSERS A-4713
C2 DOUBLE EQUALIZING COND. A-4712
C3 SINGLE EQUALIZING COND. A-3357
C4 ANTENNA COMPENSATING COND. A-3463
C5 .0003 MFD. A-4254
C6 .00025 MFD. A-5032
C7 .1 MFD. A-5033
C8 .25 MFD. A-7420
C9 .2 MFD. A-3217
C10 .002 MFD. B-2203
C11 FILTER BLOCK 60 CYCLE B-2227
25 CYCLE
R1 2,800 Ω .5 W.
R2 110 Ω 1 W.
R3 1,000 Ω 2 W.
R4 20,000 Ω 2 W.
R5 1,250 Ω 3 W.
R6 50,000 Ω VOL CONTROL
L1 FIRST R.F. COIL A-4353
L2 SECOND R.F. COIL A-4915
L3 THIRD R.F. COIL A-3397
L4 FOURTH R.F. COIL A-2934
L5 COUPLING COIL A-3750
L6 PLATE CHOKE A-3491
L7 GRID CHOKE
L8 CATHODE CHOKE
L9 SECOND R.F. TRANSFORMER
L10 THIRD R.F. TRANSFORMER
L11 FOURTH R.F. TRANSFORMER
L12 FIFTH R.F. TRANSFORMER A-2961-W
L13 FREE GRID CHOKE A-3298-W
L14 DET. PLATE CHOKE A-3506
L15 FILTER CHOKE A-3764
T1 INPUT AUDIO TRANSFORMER A-3736
T2 OUTPUT AUDIO TRANSFORMER A-3783
1ST. R.F. 485
2ND. R.F. 485
3RD. R.F. 485
4TH. R.F. 485
5TH. R.F. 485
DET. 485
6V. DIAL LIGHT A-1519
GROUND

Sparton Radio
Sparks-Withington Co.
Models: 591, 593, 931 AC

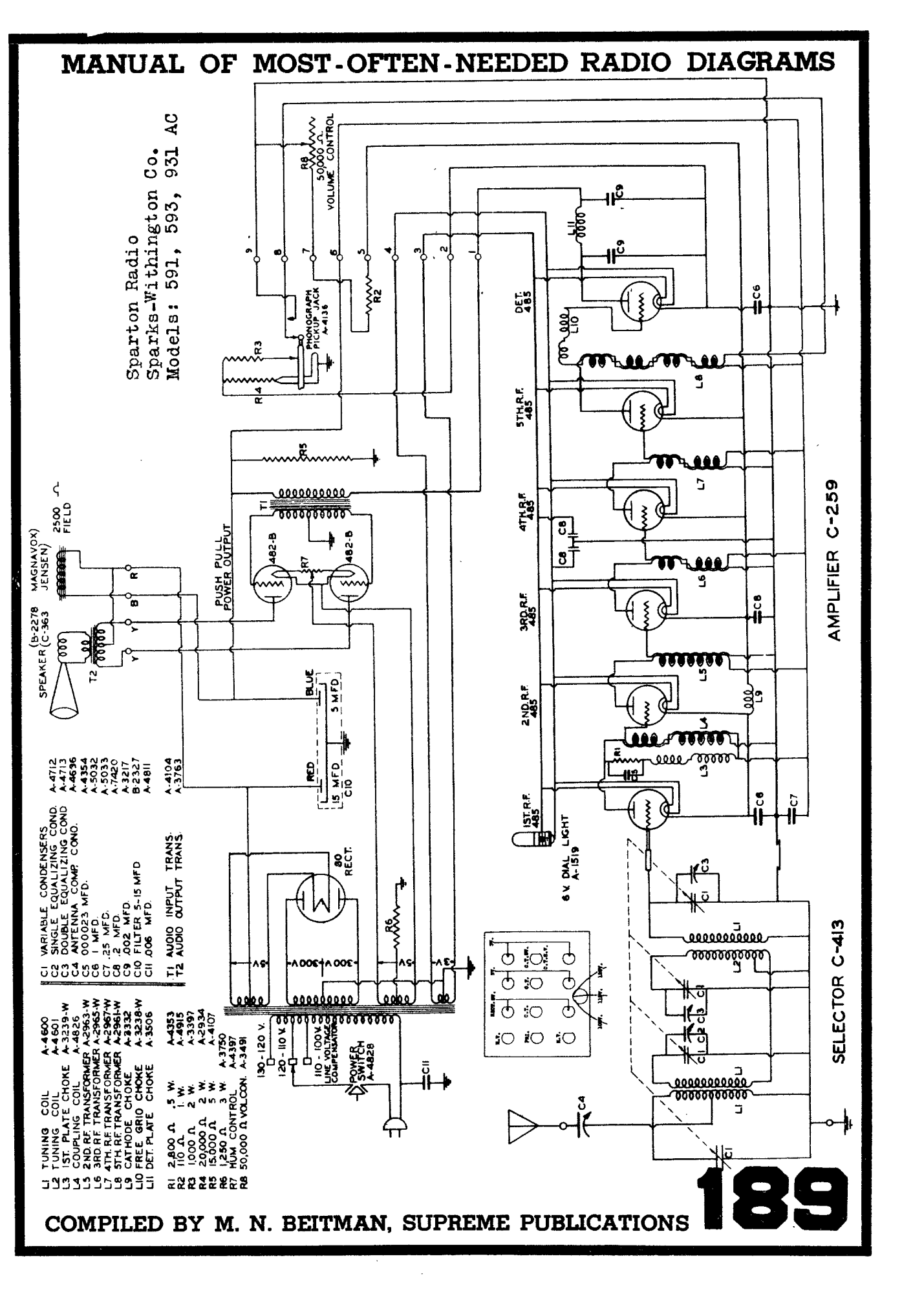

SCHEMATIC DIAGRAM
SPARTON SUPERHETERODYNE MODEL 1068, 1078, 1068X & 1078X
INTERMEDIATE FREQUENCY 456 K.C.
TOP VIEWS OF ALL SOCKET CONNECTIONS

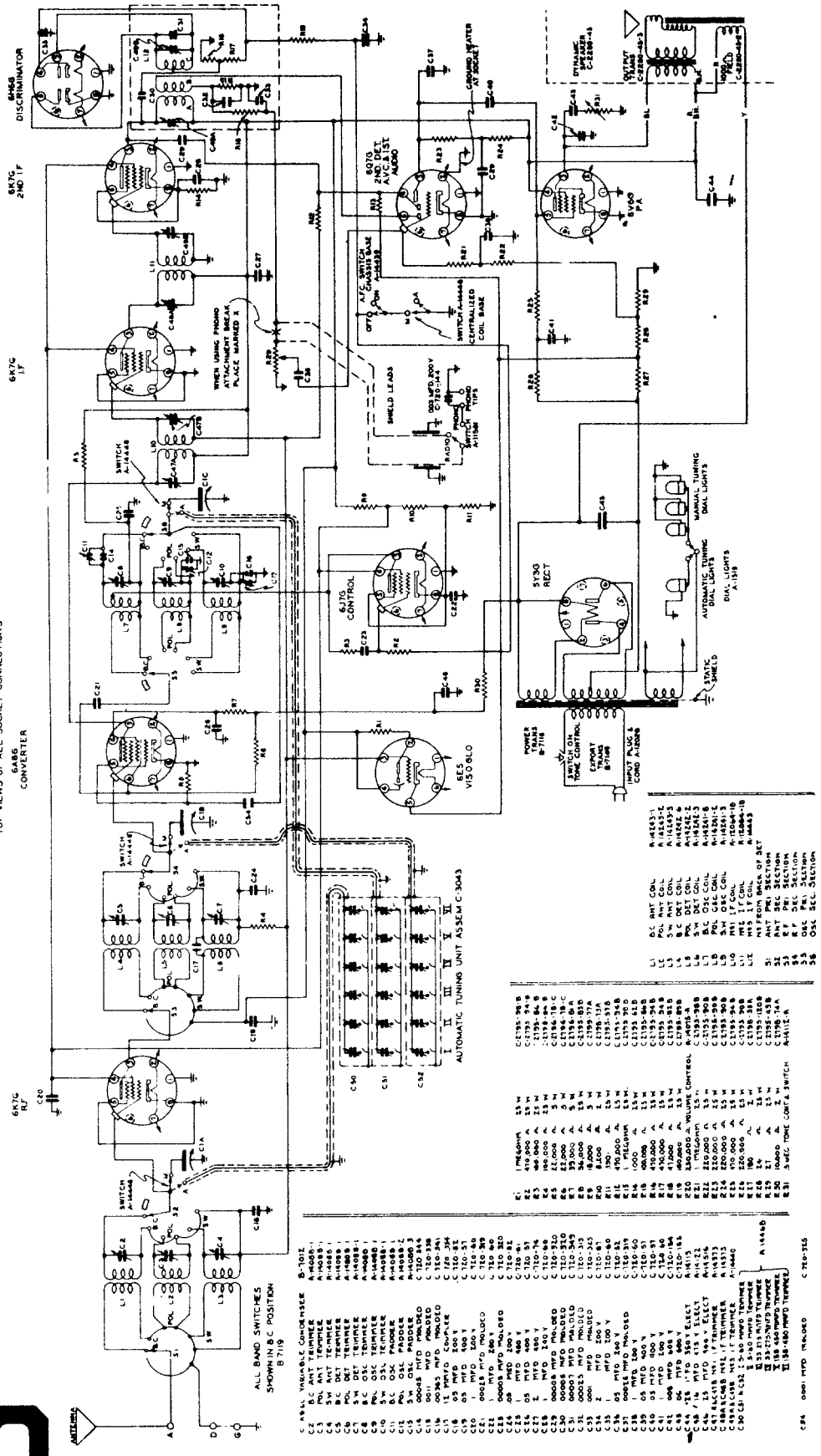

SCHEMATIC DIAGRAM
SPARTON SUPERHETERODYNE MODEL 518, 518X, 558 & 558X 568
INTERMEDIATE FREQUENCY 456 K.C.
TOP VIEW OF ALL SOCKET CONNECTIONS

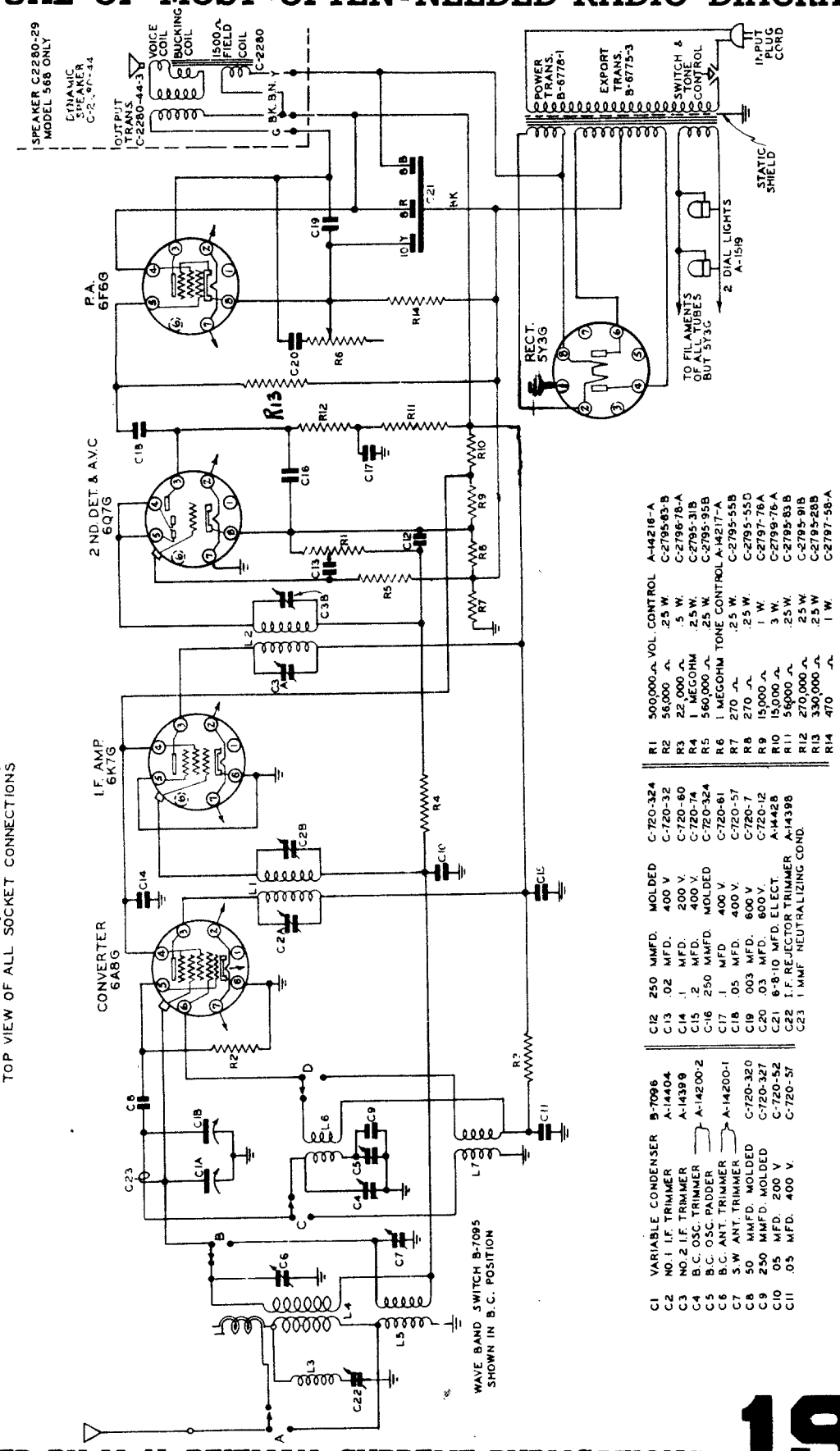

C1	VARIABLE CONDENSER	B-7096	C12	250 MMFD.	MOLDED	C-720-324	R1	500,000 Ω	VOL. CONTROL	A-14216-A
C2	NO. 1 I.F. TRIMMER	A-14404	C13	.02 MFD.	400 V	C-720-32	R2	56,000 Ω	.25 W.	C-2795-83-B
C3	NO. 2 I.F. TRIMMER	A-14399	C14	.1 MFD.	200 V.	C-720-60	R3	22,000 Ω	.5 W.	C-2796-78-A
C4	B.C. OSC. TRIMMER	A-14200-2	C15	.2 MFD.	400 V.	C-720-74	R4	1 MEGOHM	.25 W.	C-2795-31B
C5	B.C. OSC. PADDER		C16	250 MMFD.	MOLDED	C-720-324	R5	560,000 Ω	.25 W.	C-2795-95B
C6	B.C. ANT. TRIMMER	A-14200-1	C17	.1 MFD.	400 V.	C-720-61	R6	1 MEGOHM	TONE CONTROL	A-14217-A
C7	S.W. ANT. TRIMMER		C18	.05 MFD.	400 V.	C-720-57	R7	270 Ω	.25 W.	C-2795-55B
C8	50 MMFD. MOLDED	C-720-320	C19	.003 MFD.	600 V	C-720-7	R8	270 Ω	.25 W.	C-2795-55D
C9	250 MMFD. MOLDED	C-720-327	C20	.03 MFD.	600 V.	C-720-12	R9	15,000 Ω	1 W.	C-2797-76A
C10	.05 MFD. 200 V	C-720-52	C21	8-8-10 MFD.	ELECT.	A-14428	R10	15,000 Ω	3 W.	C-2799-76-A
C11	.05 MFD. 400 V.	C-720-57	C22	I.F. REJECTOR TRIMMER		A-14398	R11	56,000 Ω	.25 W.	C-2795-83B
			C23	1 MMF	NEUTRALIZING COND.		R12	270,000 Ω	.25 W	C-2795-91B
							R13	330,000 Ω	.25 W	C-2795-28B
							R14	470 Ω	1 W.	C-2797-58-A

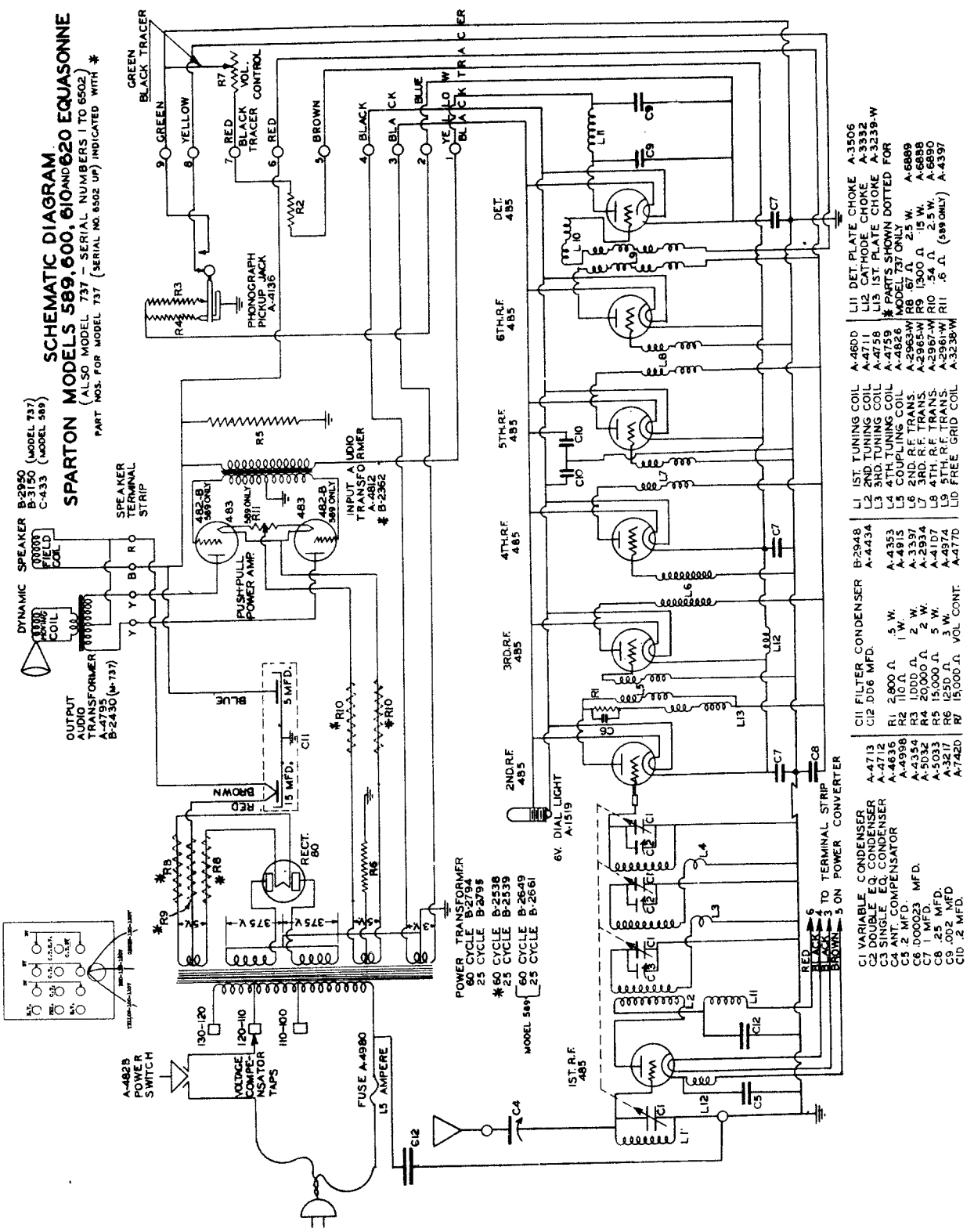
SCHEMATIC DIAGRAM
SPARTON MODELS 589, 600, 610 AND 620 EQUASONNE
(ALSO MODEL 737 – SERIAL NUMBERS 1 TO 6502)
PART NOS. FOR MODEL 737 (SERIAL NO. 6502 UP) INDICATED WITH *
SPEAKER B-2950 (MODEL 737) B-3150 (MODEL 589) C-433
DYNAMIC
SPEAKER FIELD COIL
VOICE COIL
OUTPUT AUDIO TRANSFORMER A-4795 B-2430 (M-737)
SPEAKER TERMINAL STRIP
PUSH-PULL POWER AMP
INPUT AUDIO TRANSFORMER A-4812 * B-2362
PHONOGRAPH PICKUP JACK A-4136
GREEN BLACK TRACER
VOL. CONTROL
POWER TRANSFORMER
60 CYCLE B-2794
25 CYCLE B-2795
*60 CYCLE B-2538
25 CYCLE B-2539
MODEL 589 60 CYCLE B-2649
25 CYCLE B-2661
RECT. 80
DIAL LIGHT A-1519
6V.
DET. 485
2ND.R.F. 485
3RD.R.F. 485
4TH.R.F. 485
5TH.R.F. 485
6TH.R.F. 485
1ST.R.F. 485
A-482B POWER SWITCH
VOLTAGE COMPENSATOR TAPS
FUSE A-4980
L5 AMPERE
C11 FILTER CONDENSER B-2948 A-4434
C12 .006 MFD.
R1 2,800 Ω .5 W. A-4353
R2 110 Ω 1 W. A-4915
R3 1,000 Ω 2 W. A-3397
R4 20,000 Ω 2 W. A-2934
R5 15,000 Ω 5 W. A-4107
R6 125 Ω 3 W. A-4974
R7 15,000 Ω VOL. CONT. A-4770
C1 VARIABLE CONDENSER A-4713
C2 DOUBLE EQ. CONDENSER A-4712
C3 SINGLE EQ. CONDENSER A-4636
C4 ANT. COMPENSATOR A-4998
C5 .2 MFD. A-4354
C6 .00023 MFD. A-5032
C7 1 MFD. A-5033
C8 .25 MFD. A-3217
C9 .002 MFD A-7420
C10 .2 MFD.
L1 1ST. TUNING COIL A-4600
L2 2ND. TUNING COIL A-4711
L3 3RD. TUNING COIL A-4758
L4 4TH. TUNING COIL A-4759
L5 COUPLING COIL A-4826
L6 2ND. R.F. TRANS. A-2963-W
L7 3RD. R.F. TRANS. A-2965-W
L8 4TH. R.F. TRANS. A-2967-W
L9 5TH. R.F. TRANS. A-2961-W
L10 FREE GRID COIL A-3238-W
L11 DET. PLATE CHOKE A-3506
L12 CATHODE CHOKE A-3332
L13 1ST. PLATE CHOKE A-3239-W
* PARTS SHOWN DOTTED FOR MODEL 737 ONLY
R8 .67 Ω 2.5 W. A-6889
R9 1,300 Ω .15 W. A-6888
R10 .54 Ω 2.5 W. A-6890
R11 .6 Ω (589 ONLY) A-4397
TO TERMINAL STRIP ON POWER CONVERTER

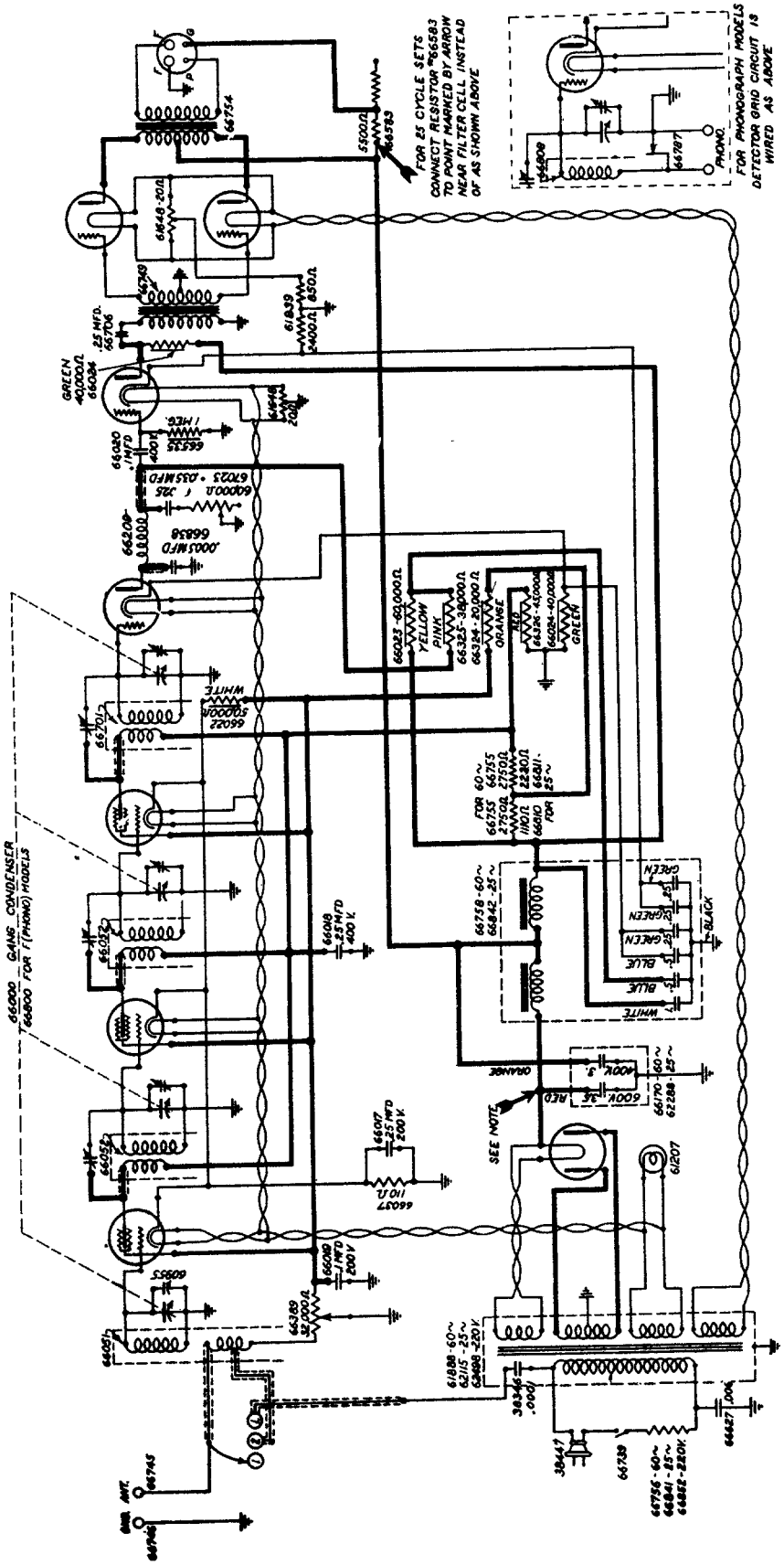

Stewart-Warner Model R-100-A, B, and E, Alternating Current Sets

STEWART-WARNER MODEL 1121 AUTO RADIO (112 CHASSIS)

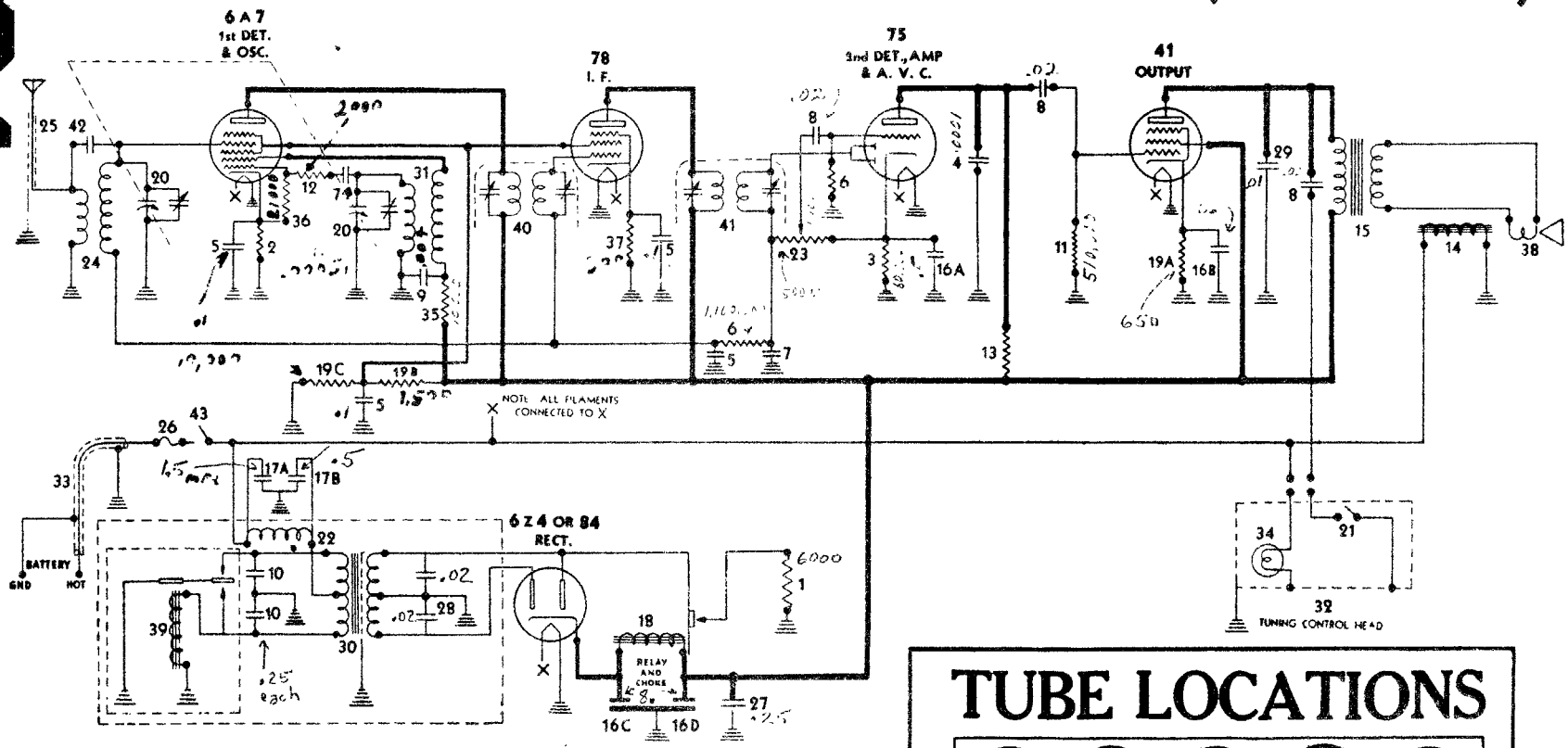

Tube Type	Position in Circuit	Filament Voltage	Plate Voltage	Screen Grid Voltage	Cathode (Bias) Voltage
6A7	1st Det. and Osc.	5.5	144	70	1.4
78	I. F.	5.5	144	70	2.0
75	2nd Det.	5.5	60	—	1.0
41	Output	5.5	142	144	9.0
84	Rect.	5.5	—	—	179

TUBE LOCATIONS

6 A 7 1st DET. & OSC. — 78 I. F. — 75 2nd DET. — 41 OUTPUT — 6 Z 4 OR 84 RECT.

UPPER SHAFT—TUNING
LOWER SHAFT—VOLUME

VIBRATOR
DO NOT ATTEMPT TO ADJUST VIBRATOR OR GUARANTEE IS VOIDED. REPLACE WITH PART NO. 83371, IF NECESSARY.

FRONT OF SET

I. F. FREQUENCY 456 K. C.

MANUAL OF MOST-OFTEN-NEEDED RADIO DIAGRAMS

Circuit Data of Stewart-Warner Models R-102-A, B & E.*

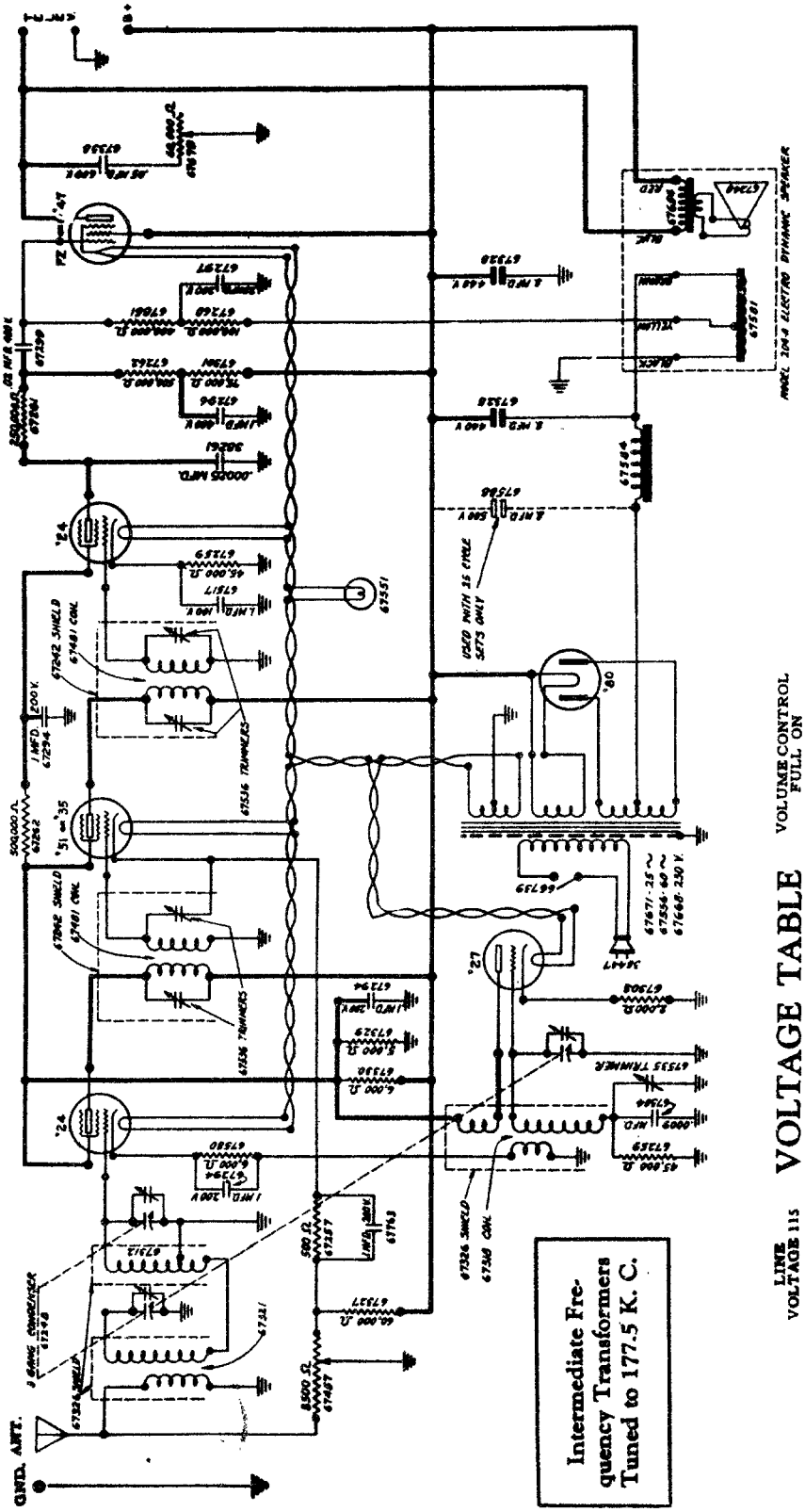

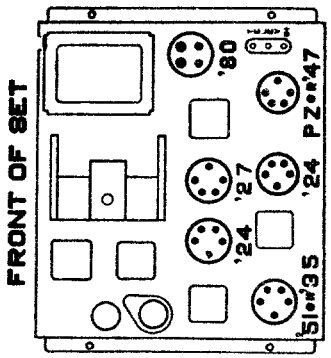

LINE VOLTAGE 115 **VOLTAGE TABLE** VOLUME CONTROL FULL ON

Type of Tube	Tube Circuit	Filament Voltage	Plate Voltage	Screen Grid Voltage	Bias Voltage
'24	1st Det.	2.45	250	95	6.5
'27	Osc.	2.45	95		9
'51	I. F.	2.40	250	95	3
'24	2nd Det.	2.45	70	30	7
P. Z. or '47	Output	2.45	230	250	15 ‡
'80	Rect.	4.8	170		

All D. C. voltages measured with respect to ground, using high resistance voltmeter of 1000 ohms per volt. Readings will vary, depending upon voltage range of meter, being higher for higher range instruments. This variation is most marked for second detector screen grid and plate voltages.

‡ This reading obtained between ground and yellow speaker lead. Direct reading from grid to ground or reading taken with a set tester will show about 3 volts because of high resistance in grid circuit.

STEWART-WARNER MODEL R-136 CHASSIS (RECEIVER MODELS 1361 to 1369)

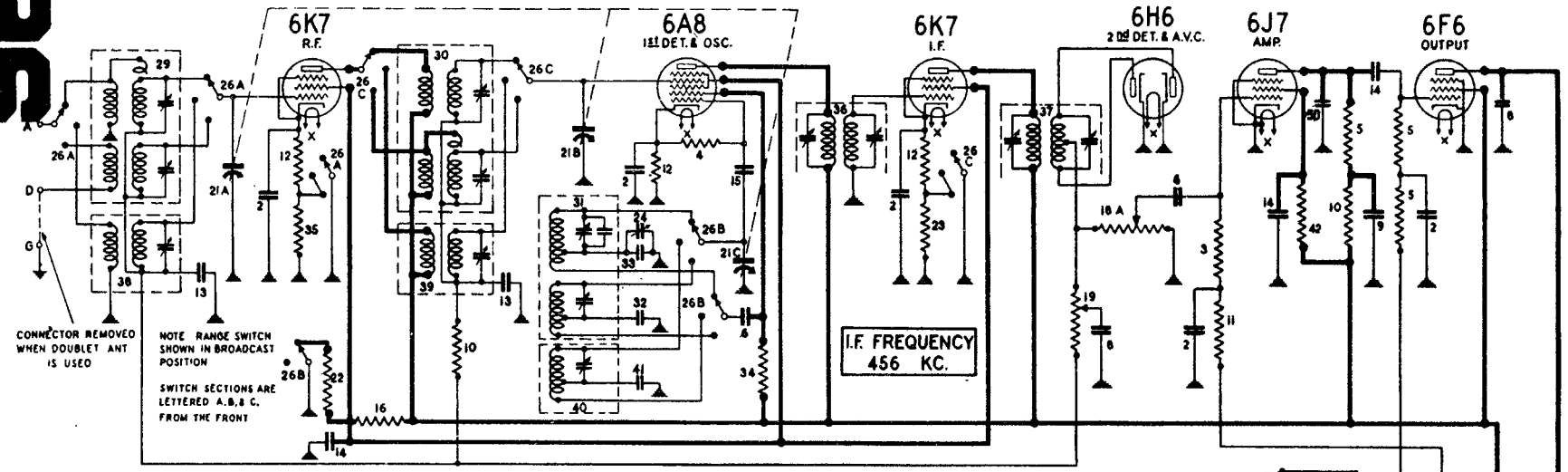

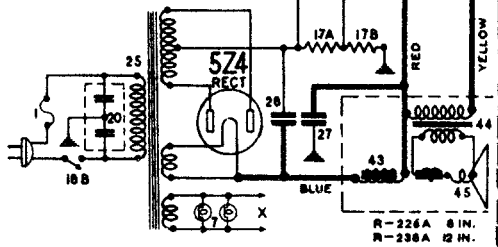

SOCKET VOLTAGES

LINE VOLTAGE 115 VOLTS Volume Control on Full ANTENNA GROUNDED
RANGE SWITCH SET ON BROADCAST POSITION DIAL TUNED TO 540 KC.

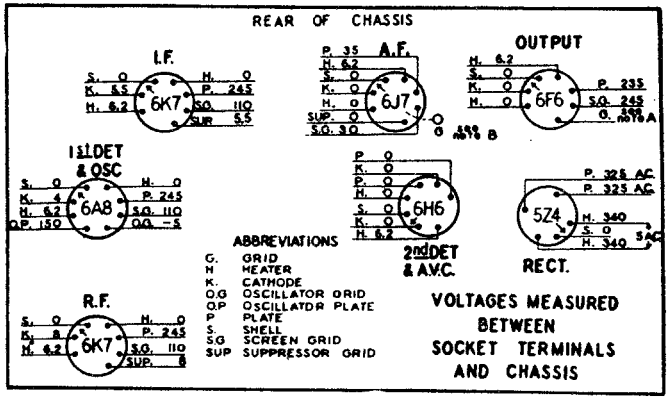

IMPORTANT: Use a high resistance meter of 1000 ohms per volt.
NOTE A: The grid bias on the 6F6 output tube is —16.5 volts, measured across the resistors 17A and 17B.
NOTE B: The grid bias on the 6J7 amplifier tube is —1.7 volts measured across resistor 17B.
Speaker field resistance is 1300 ohms with coil warm.

R-136 PARTS LIST

Diagram No.	Part No.	DESCRIPTION
1	38841	Fuse, 1 amp.
2	81630	.1 mfd. 175 volt paper condenser
3	83072	510,000 ohm ¼ watt carbon resistor
4	83080	51,000 ohm ¼ watt carbon resistor
5	83082	260,000 ohm ¼ watt carbon resistor
6	83219	.01 mfd. 600 volt paper condenser
7	83278	Dial lamp 6.3 volt
8	83706	.006 mfd. 600 volt paper condenser
9	83974	.1 mfd. 200 volt paper condenser
10	84198	110,000 ohm ¼ watt carbon resistor
11	84235	1.1 megohm ¼ watt carbon resistor
	84312	Output transformer (R-225-A 8" spkr.)
	84504	Diaphragm and shell assembly (R-225-A 8 inch speaker)
	84505	Field coil assembly (R-225-A 8" spkr.)
12	84888	300 ohm ½ watt wire wound resistor
13	85053	.05 mfd. 100 volt paper condenser
14	85059	.05 mfd. 300 volt paper condenser
15	85061	.000051 mfd. mica condenser
16	85063	15,000 ohm 2 watt carbon resistor
17-A, 17-B	85067	275 ohm wire wound bias resistor; 25 ohm wire wound bias resistor (one unit)
18-A, 18-B	85073	250,000 ohm volume control; Line switch (one unit)
19	85074	500,000 ohm tone control
20	85075	Dual .01 mfd. 750 volt A.C. paper cond.
21A to C	85084	3 Gang variable condenser
22	85116	25,000 ohm ½ watt carbon resistor
23	85117	1,000 ohm ½ watt carbon resistor
24	85285	Padding trimmer
25	85428	Power trans. 115 V 60 cycle (136-A only) (See 85760 for other voltages and frequencies)
26A to C	85429	Three deck range switch
27	85430	16 mfd. 300 volt electrolytic condenser
28	85431	16 mfd. 400 volt electrolytic condenser
29	85432	Antenna coil and shield assembly (B & No. 3 S.W.)
30	85433	R. F. coil and shield assembly (B & No. 3 S.W.)
31	85434	Oscillator coil and shield assembly (B & No. 3 S.W.)
32	85440	.00351 mfd. mica condenser
33	85441	.00042 mfd. mica condenser
34	85442	21,000 ohm ½ watt carbon resistor
35	85443	2,000 ohm ½ watt carbon resistor
36	85452	1st I.F. transformer
37	85453	2nd I.F. transformer
38	85455	Antenna coil assembly (No. 2 S.W.)
39	85456	R.F. coil assembly (No. 2 S.W.)
40	85457	Oscillator coil assembly (No. 2 S.W.)
41	85467	.00137 mfd. mica condenser
42	85472	1.6 magohm ¼ watt carbon resistor
43	85478	Field coil assembly (R-236-A spkr.) (See 84505 for R-225-A 8" spkr.)
44	85482	Output transformer (R-236-A 12" spkr.) (See 84312 on R-225-A 8" spkr.)
45	85592	Diaphragm and shell assembly (R-236-A 12" spkr.) (See 84504 for R-225-A 8 inch speaker)
50	84370	.00011 mfd. mica condenser

STEWART-WARNER MODEL R-134 CHASSIS (RECEIVER MODELS 1341 to 1349)

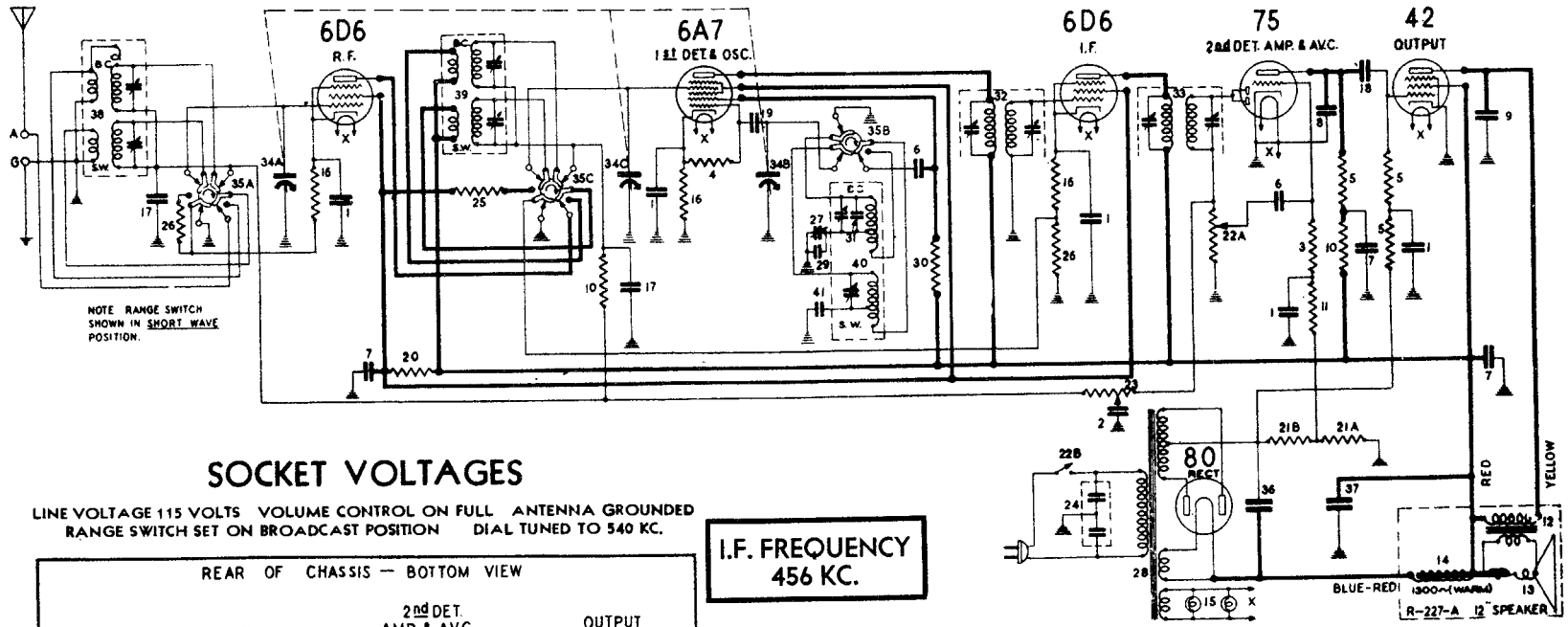

SOCKET VOLTAGES

LINE VOLTAGE 115 VOLTS VOLUME CONTROL ON FULL ANTENNA GROUNDED
RANGE SWITCH SET ON BROADCAST POSITION DIAL TUNED TO 540 KC.

I.F. FREQUENCY 456 KC.

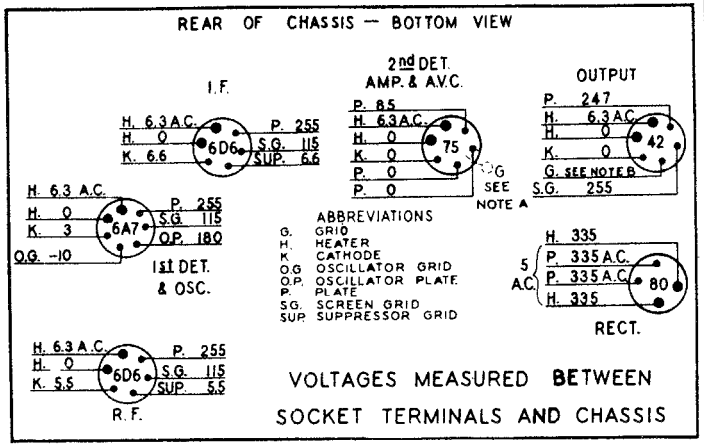

IMPORTANT: Use a high resistance meter of 1000 ohms per volt.

NOTE A: The grid bias for the 75 triode section is —1.2 volts measured across resistor 21A.

NOTE B: The grid bias on the 42 output tube is —16 volts, measured across the resistors 21A and 21B.

MODEL R-134 PARTS LIST

Diag. No.	Part No.	DESCRIPTION
1	81630	.1 mfd. 175 volt paper condenser
2	83011	.004 mfd. 600 volt paper condenser
3	83072	510,00 ohm ¼ watt carbon resistor
4	83080	51,000 ohm ¼ watt carbon resistor
5	83082	260,000 ohm ¼ watt carbon resistor
6	83219	.01 mfd. 600 volt paper condenser
7	83440	.1 mfd. 400 volt paper condenser
8	83539	260 mmfd. mica condenser
9	83706	.006 mfd. 600 volt paper condenser
10	84198	110,000 ohm ¼ watt carbon resistor
11	84235	1.1 megohm ¼ watt carbon resistor
12	84312	Output transformer (on R-227-A Spkr.)
13	84506	Diaphragm and shell assembly for (R-227-A Spkr.)
14	84507	Field coil and housing for (R-227-A Spkr.)
15	84759	Pilot lamp, 6-8 volt
16	84888	300 ohm ½ watt W.W. resistor
17	85053	.05 mfd. 100 volt paper condenser
18	85059	.05 mfd. 300 volt paper condenser
19	85061	51 mmfd. mica condenser
20	85063	15,000 ohm 2 watt carbon resistor
21A, 21B	85067	20 ohm, 220 ohm — Bias resistor (wire wound)
22A, 22B	85073	Volume Control (250,000 ohm), Line Switch
23	85074	Tone Control (500,000 ohm)
24	85075	Dual .01 mfd. 750 volt paper condenser
25	85116	25,000 ohm ½ watt carbon resistor
26	85117	1,000 ohm ½ watt carbon resistor
27	85285	Padding trimmer
28	85428	Power transformer, 115 volt 60 cycle
29	35441	420 mmfd. mica condenser
30	85442	21,000 ohm ½ watt carbon resistor
31	85454	11 mmfd. mica condenser
32	85788	1st I.F. transformer
33	85789	2nd I.F. transformer
34 A to C	85790	Three gang condenser
35 A to C	85791	Range switch
36	85792	16 mfd. 475 volt electrolytic condenser
37	85793	16 mfd. 475 volt electrolytic condenser
38	85829	Antenna coil and shield assembly
39	85830	R.F. coil and shield assembly
40	85831	Oscillator coil and shield assembly
41	85837	.00194 mfd. mica condenser

STEWART-WARNER MODEL R-160 AUTO RADIO CHASSIS (RECEIVER MODELS 1601 to 1609)

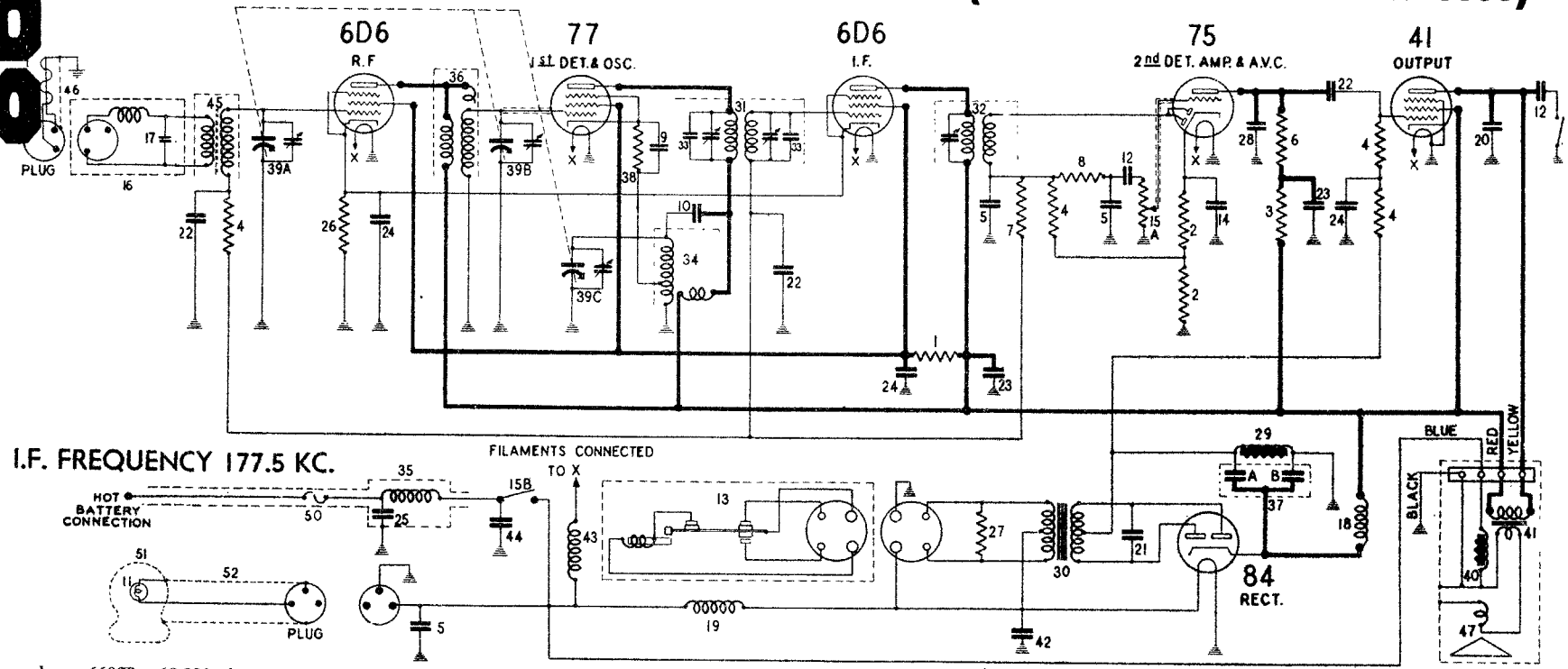

1	66023	60.000 ohm 1 watt carbon resistor
2	67303	2.000 ohm ¼ watt carbon resistor
3	83080	51.000 ohm ¼ watt carbon resistor
4	83082	260.000 ohm ¼ watt carbon resistor
5	83539	260 mmfd. mica condenser
48	83777	Battery cable and fuse housing
6	84198	110,000 ohm ¼ watt carbon resistor
7	84235	1.1 megohm ¼ watt carbon resistor
8	84238	11,000 ohm ¼ watt carbon resistor
9	84282	.001 mfd. mica condenser
10	84833	70 mmfd. mica condenser
11	85296	Pilot lamp 6-8 volt (bayonet base)
12	88026	.02 mfd. 400 volt paper condenser
49	88054	Tone control switch
13	88156	Vibrator
14	88170	10 mfd. 25 volt electrolytic condenser
15A}	88171	{Volume control 500,000 ohm}
15B}		{Line switch}
16	88172	Antenna Filter
17	88173	50 mmfd. mica condenser
18	88181	R. F. choke coil
19	88183	R. F. choke coil (to vibrator)
20	88185	.006 mfd. 600 volt paper condenser
21	88187	.01 mfd. 1500 volt paper condenser
22	88189	.05 mfd. 200 volt paper condenser
23	88191	.1 mfd. 300 volt paper condenser
24	88193	.25 mfd. 150 volt paper condenser
25	88195	.5 mfd. 150 volt paper condenser
26	88203	600 ohm ¼ watt carbon resistor
27	88204	210 ohm ½ watt carbon resistor
28	88205	.0021 mfd. mica condenser
29	88210	Filter choke
30	88213	Power transformer
31	88222	1st I.F. transformer
32	88223	2nd I.F. transformer
33	88233	110 mmfd. mica condenser
34	88234	Oscillator coil and shield assembly
35	88239	"A" filter
36	88250	R.F. coil and shield assembly
37A}	88256	{Electrolytic condenser 4 mfd. 350 volt}
37B}		{Electrolytic condenser 8 mfd. 350 volt}
38	88257	9,500 ohm ¼ watt carbon resistor
39A to C	88258	Three gang variable condenser
40	88274	Field coil and housing (for R-245-A spkr.)
41	88276	Output transformer
42	88285	1.25 mfd. 150 volt paper condenser
43	88289	R.F. choke (to filaments)
44	88298	.25 mfd. 150 volt paper condenser (low reactance)
45	88312	Antenna coil and shield assem. (iron core)
46	88327	Antenna cable and plug
47	88328	Diaphragm and shell assem. (R-245-A spkr.)
48	83777	Battery cable and fuse housing
49	88054	Tone control switch
50	88365	Fuse, 10 amperes
51	88730	Control head less shafts
52	88738	Pilot light cable with plug, 31"

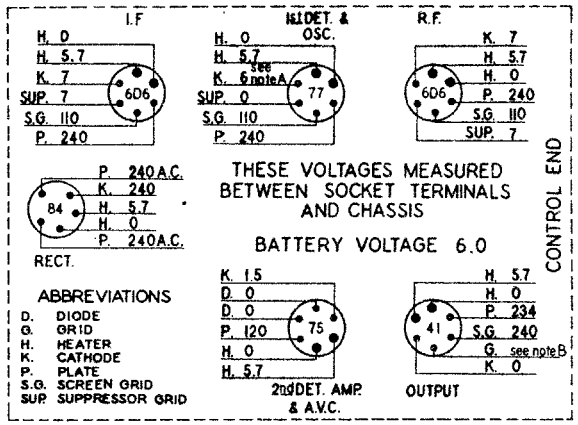

ABBREVIATIONS

D. DIODE
G. GRID
H. HEATER
K. CATHODE
P. PLATE
S.G. SCREEN GRID
SUP. SUPPRESSOR GRID

COMPILED BY M. N. BEITMAN, SUPREME PUBLICATIONS

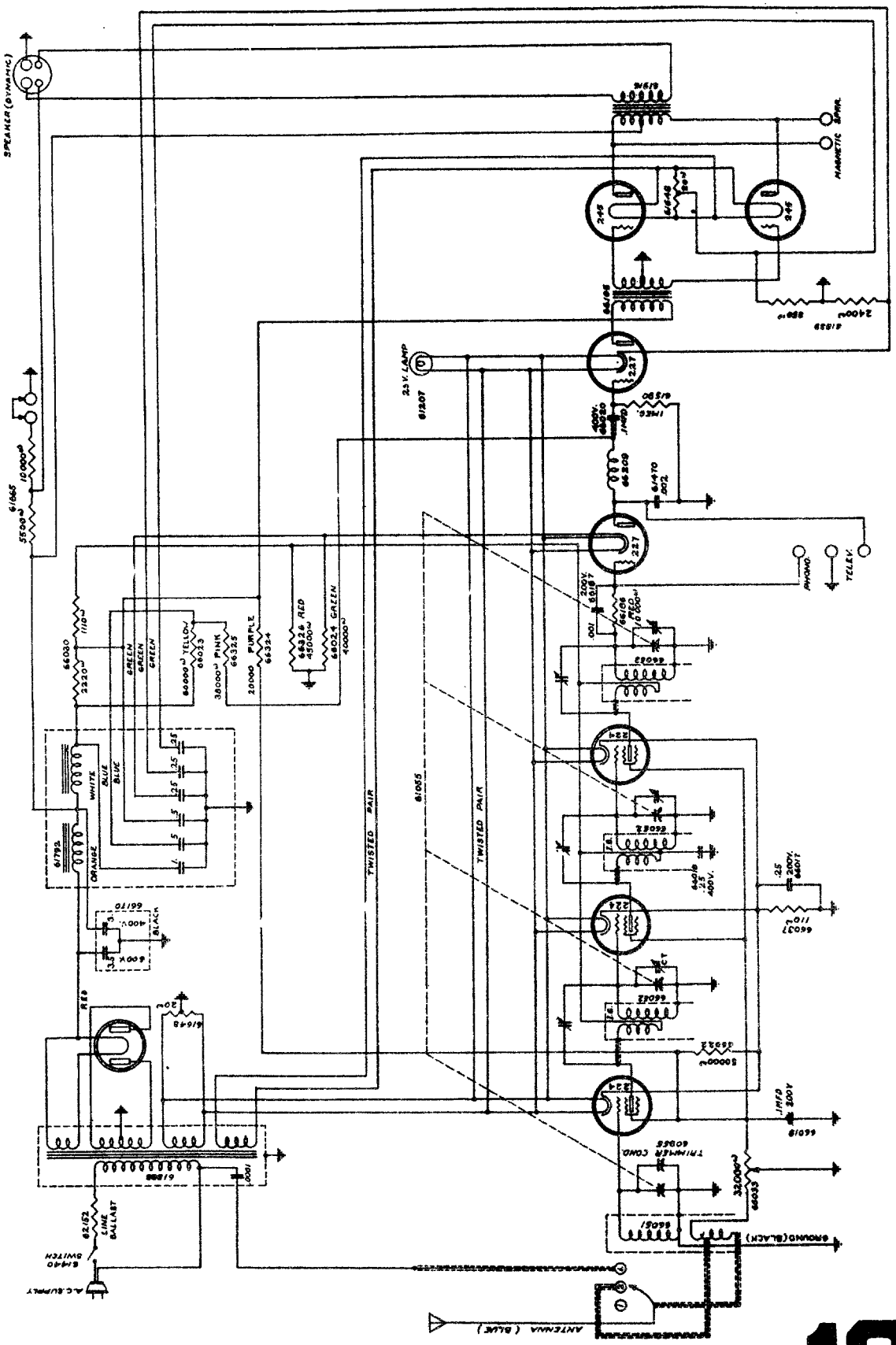

Stewart-Warner 950 Series A. C. Radio Receivers

SCHEMATIC DIAGRAM

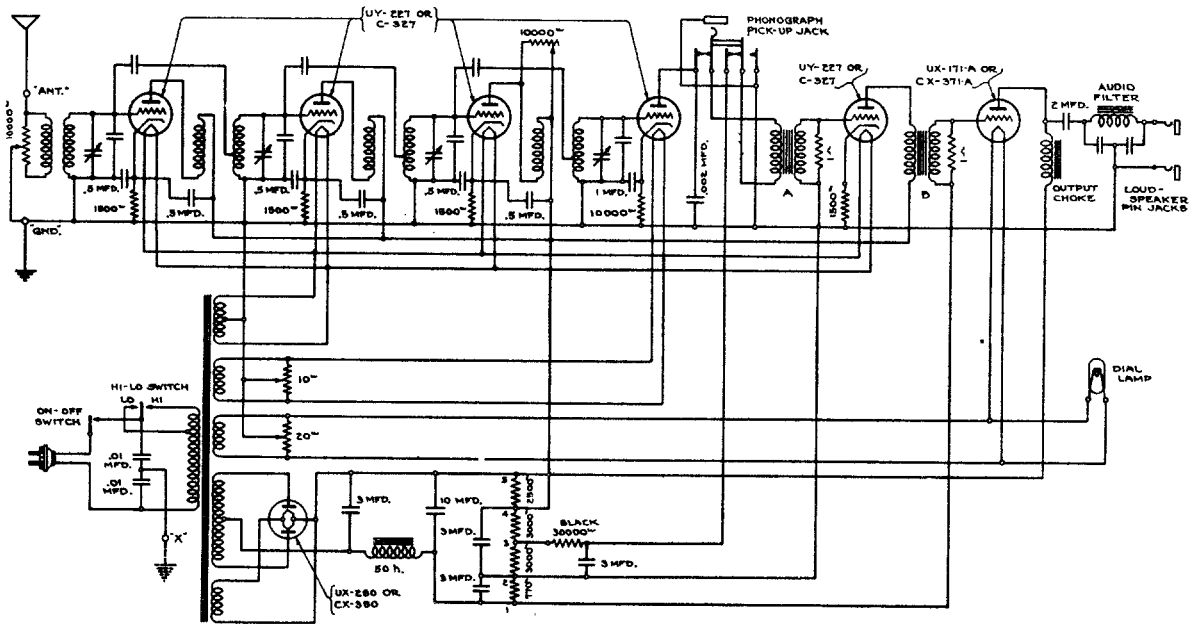

STROMBERG–CARLSON NOS. 635 AND 636 RECEIVERS

The following table shows how the filament, plate and grid voltages vary with different line voltages, in the No. 635 receiver. The plate voltages are measured between tube plates and Tap No. 2 of the voltage divider. The grid voltages of the heater type tubes are measured across the cathode resistors; and that of the audio output tube is measured between Taps No. 1 and No. 2 of the voltage divider.

Line Voltage "HI-LO" Switch	105 "LO"	110 "LO"	115 "LO"	115 "HI"	120 "HI"	125 "HI"
UX-280						
Filament Voltage (RMS)	4.5	4.75	5.0	4.5	4.7	4.93
Voltage per anode (RMS)	236.0	248.0	259.0	236.0	248.0	258.0
Amplifiers						
Heater Voltage (RMS)	2.17	2.27	2.38	2.16	2.26	2.35
Plate Voltage	106.0	110.0	115.0	106.0	110.0	115.0
Grid Voltage	— 5.0	— 5.5	— 5.75	— 4.7	— 5.2	— 5.6
Detector						
Heater Voltage (RMS)	2.11	2.22	2.32	2.1	2.2	2.3
Plate Voltage	39.0	40.0	42.0	38.0	40.0	41.0
Grid Voltage	— 3.25	— 3.5	— 3.75	— 3.25	— 3.5	— 3.75
Audio Output Tube						
Filament Voltage (RMS)	4.5	4.75	5.0	4.53	4.72	4.94
Plate Voltage	167.0	175.0	184.0	165.0	174.0	182.0
Grid Voltage	—37.0	—40.0	—41.0	—36.0	—40.0	—41.0

NOTE—The grid voltage on the 1st audio tube will be slightly lower than that on the R. F. amplifier tubes, due to the drop in the secondary of the 1st audio transformer.

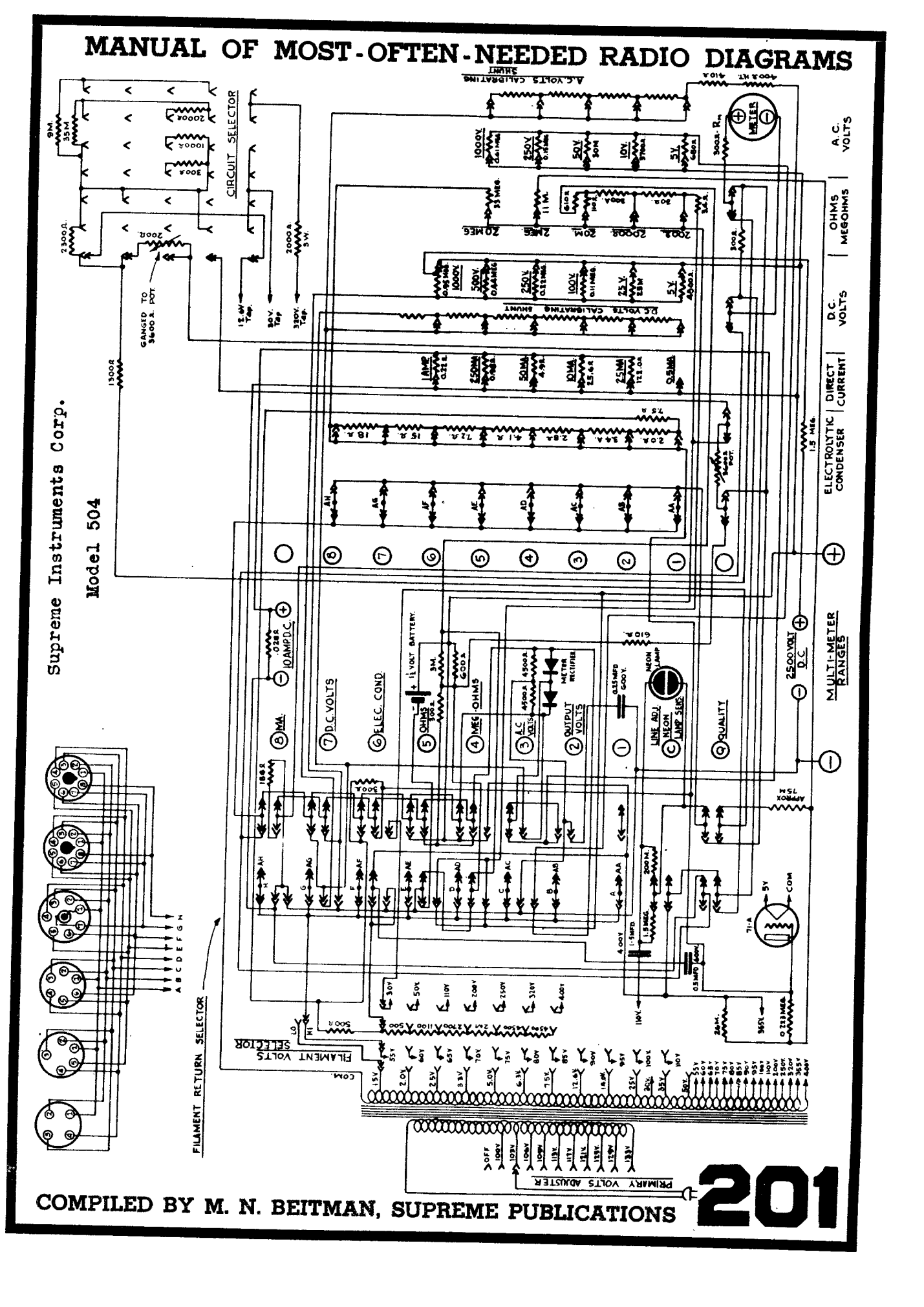
Supreme Instruments Corp.
Model 504
CIRCUIT SELECTOR
A.C. VOLTS
OHMS MEGOHMS
D.C. VOLTS
DIRECT CURRENT
ELECTROLYTIC CONDENSER
MULTI-METER RANGES
METER
D.C. VOLTS
ELEC. COND
OHMS
MEG-OHMS
A.C. VOLTS
OUTPUT VOLTS
QUALITY
MA.
10 AMP D.C.
2500 VOLT D.C.
FILAMENT VOLTS SELECTOR
FILAMENT RETURN SELECTOR
PRIMARY VOLTS ADJUSTER
A.C. VOLTS CALIBRATING SHUNT
D.C. VOLTS CALIBRATING SHUNT
GANGED TO 3600Ω POT.
COM.

Transformer Corp. of America

Models 51, 53, 55

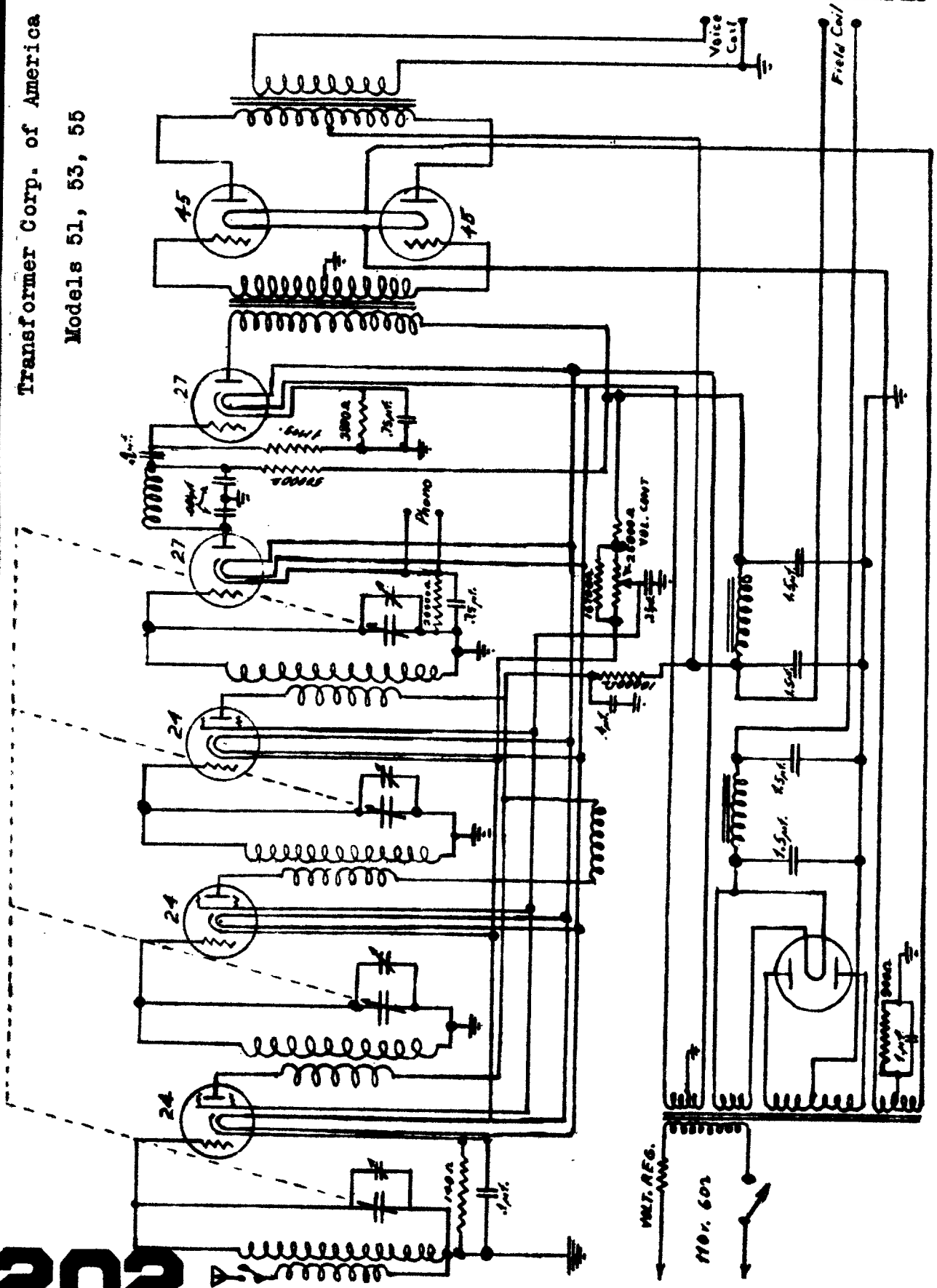

Transformer Corp. of America
Model 480

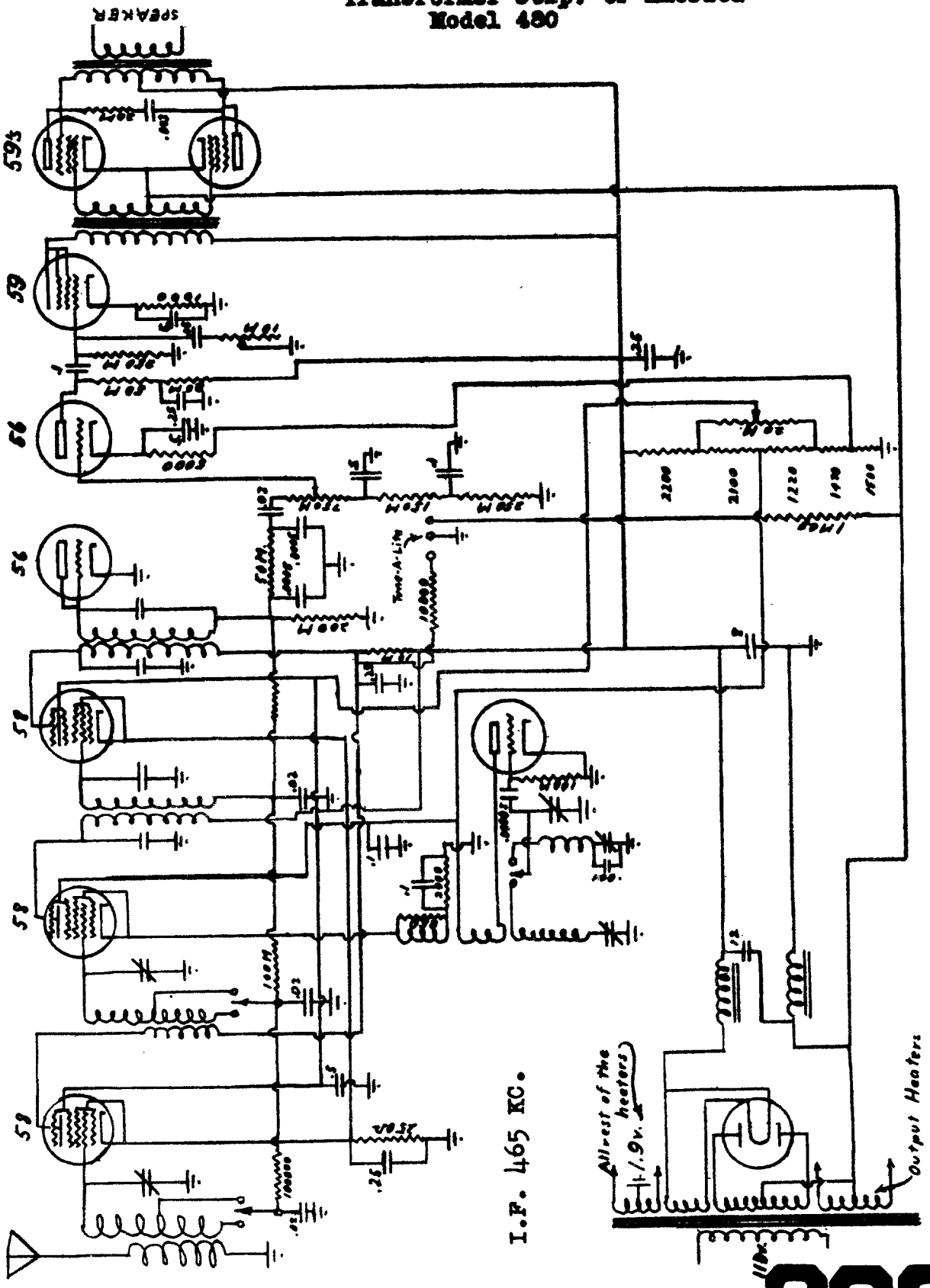

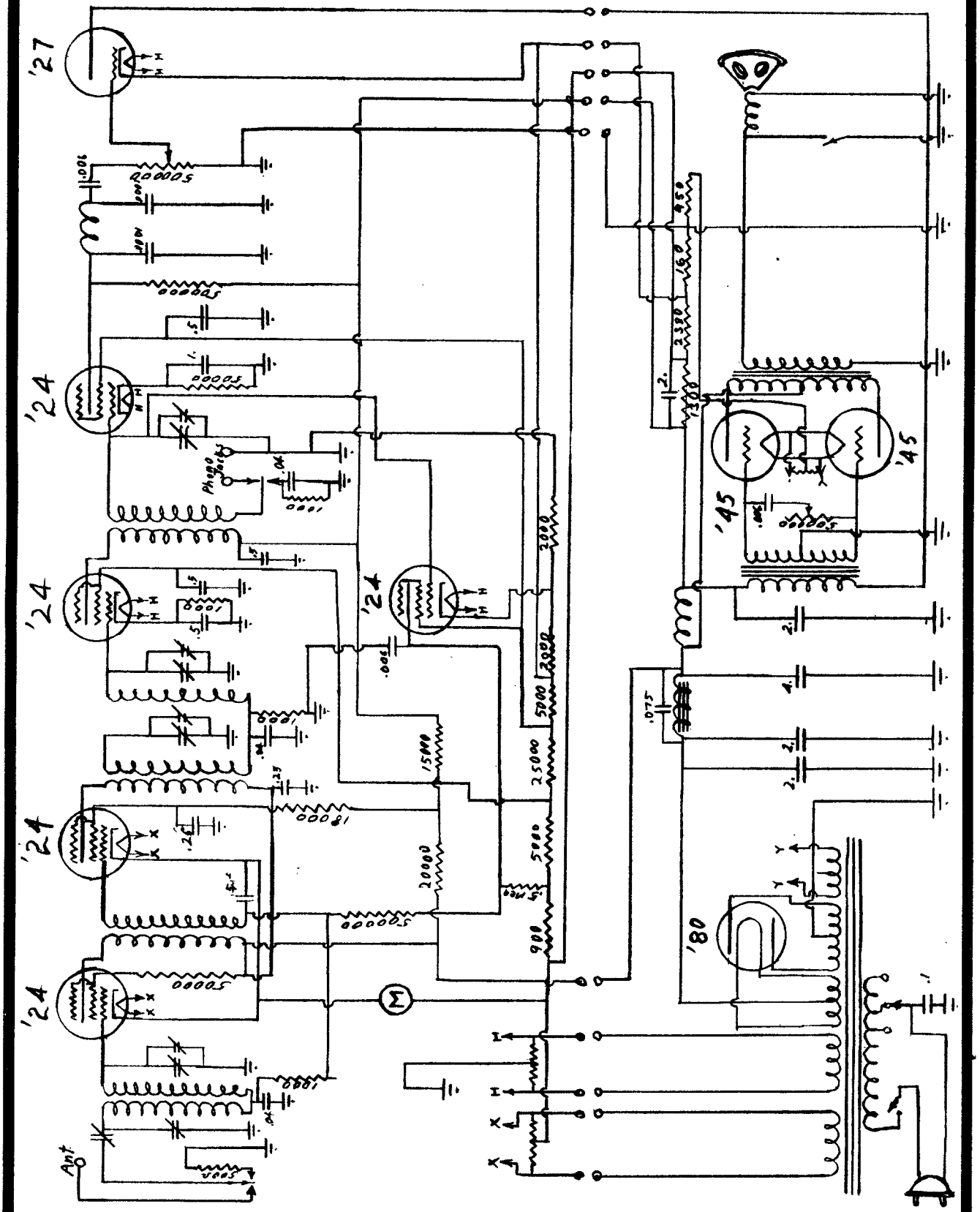

United American Bosch Corp.
Models: 60, 60D, 60E, 61

COMPILED BY M. N. BEITMAN, SUPREME PUBLICATIONS

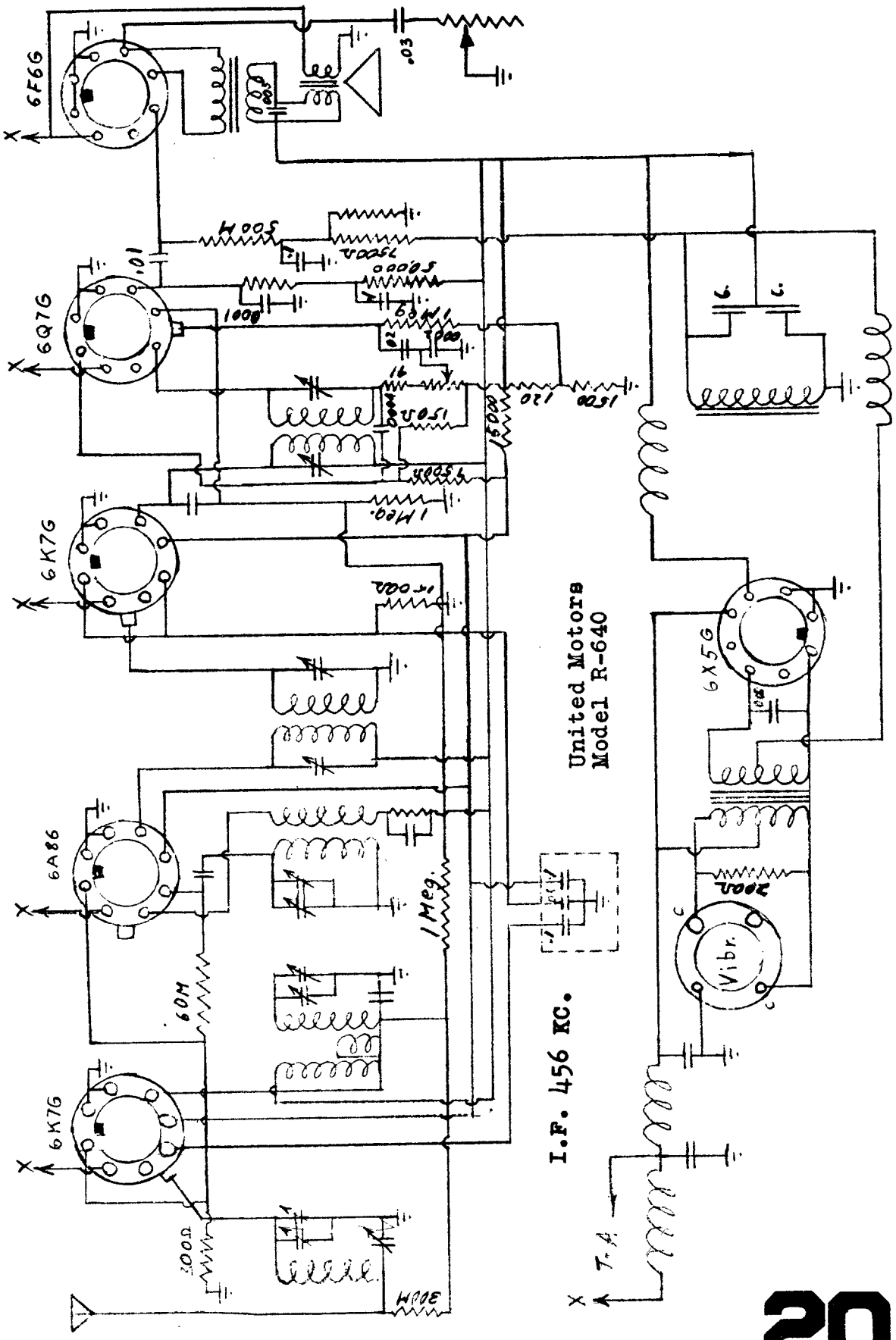
6F6G
6Q7G
6K7G
6A8G
6K7G
6X5G
Vibr.
United Motors
Model R-640
I.F. 456 KC.
1 Meg.
60M
T.A.

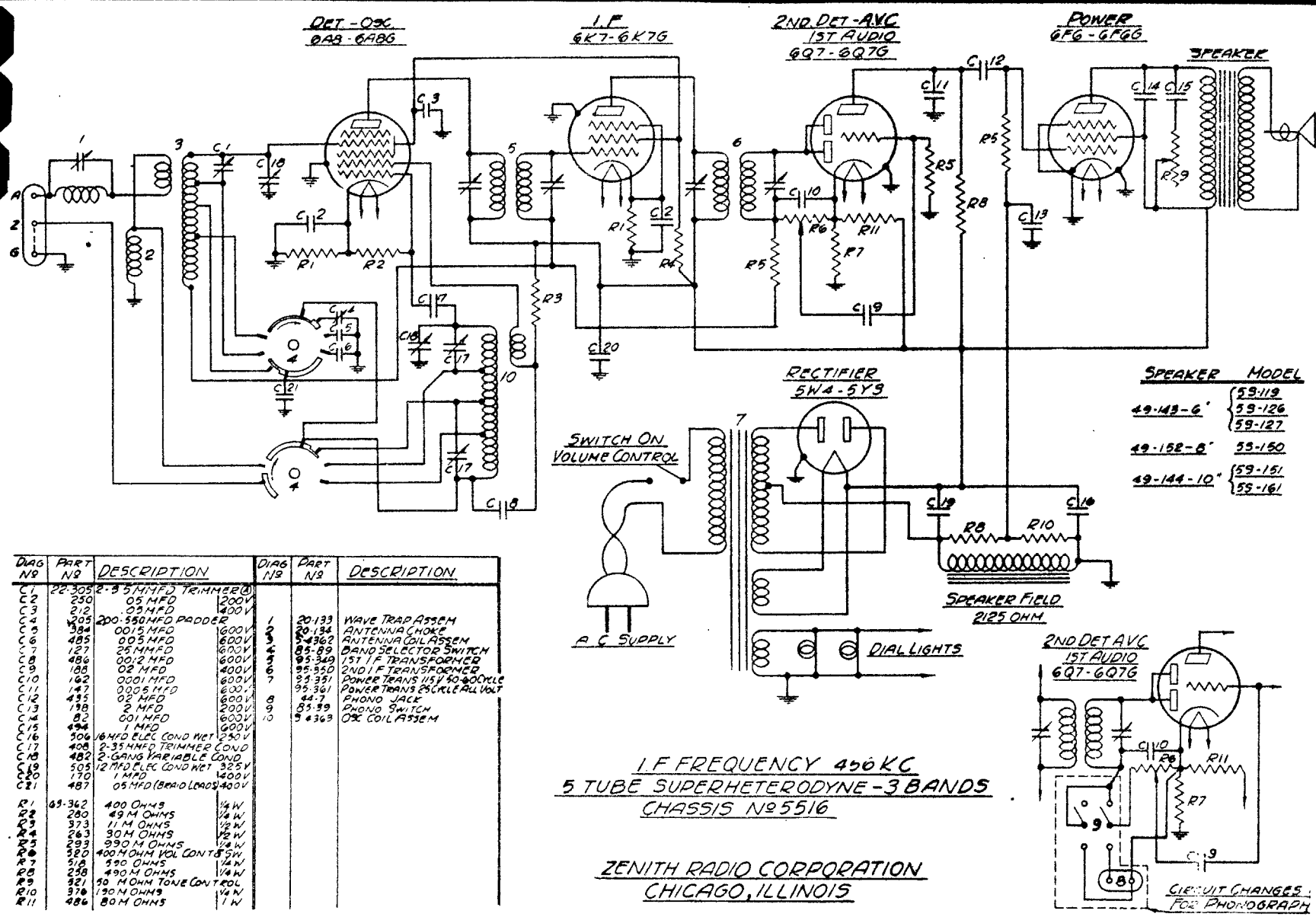

DIAG Nº	PART Nº	DESCRIPTION	
C1	22-305	2-35 MMFD TRIMMER (A)	
C2	250	05 MFD	200V
C3	212	.05 MFD	400V
C4	205	200-550 MFD PADDER	
C5	384	0015 MFD	600V
C6	485	005 MFD	600V
C7	127	25 MMFD	600V
C8	486	0012 MFD	600V
C9	188	02 MFD	400V
C10	162	0001 MFD	600V
C11	147	0005 MFD	600V
C12	435	02 MFD	600V
C13	198	2 MFD	200V
C14	82	001 MFD	600V
C15	494	1 MFD	600V
C16	506	16 MFD ELEC COND WET	250V
C17	408	2-35 MMFD TRIMMER COND	
C18	482	2-GANG VARIABLE COND	
C19	505	12 MFD ELEC COND WET	325V
C20	170	1 MFD	400V
C21	487	05 MFD (BRAID LEADS)	400V
R1	69-362	400 OHMS	1/4 W
R2	280	49 M OHMS	1/4 W
R3	373	11 M OHMS	1/2 W
R4	263	30 M OHMS	1/2 W
R5	293	990 M OHMS	1/4 W
R6	520	400 M OHM VOL CONTROL	
R7	518	590 OHMS	1/4 W
R8	258	490 M OHMS	1/4 W
R9	521	50 M OHM TONE CONTROL	
R10	370	190 M OHMS	1/4 W
R11	486	80 M OHMS	1 W

DIAG Nº	PART Nº	DESCRIPTION
1	20-133	WAVE TRAP ASSEM
2	20-134	ANTENNA CHOKE
3	5-4362	ANTENNA COIL ASSEM
4	85-89	BAND SELECTOR SWITCH
5	95-349	1ST I.F. TRANSFORMER
6	95-350	2ND I.F. TRANSFORMER
7	95-351	POWER TRANS 115V 50-60 CYCLE
	95-361	POWER TRANS 25 CYCLE ALL VOLT
8	44-7	PHONO JACK
9	85-39	PHONO SWITCH
10	5-4363	OSC COIL ASSEM

I.F. FREQUENCY 456 KC
5 TUBE SUPERHETERODYNE - 3 BANDS
CHASSIS Nº 5516

ZENITH RADIO CORPORATION
CHICAGO, ILLINOIS

Models 5-S-119, 5-S-126, 5-S-127, 5-S-150, 5-S-151, 5-S-161. (Chassis No. 5516)

United Motors Service Model 4037

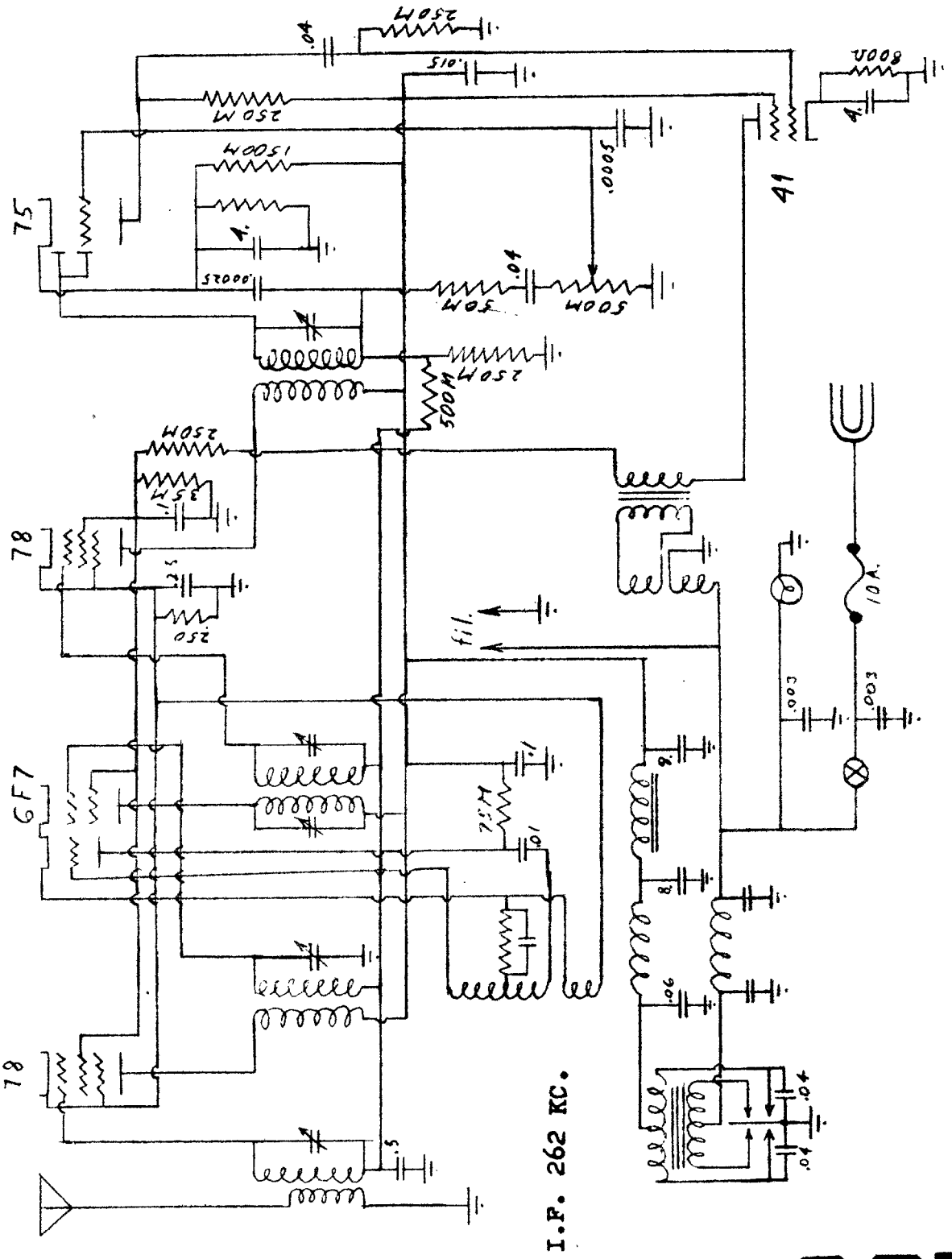

MANUAL OF MOST-OFTEN-NEEDED RADIO DIAGRAMS

United Motors Model 364441

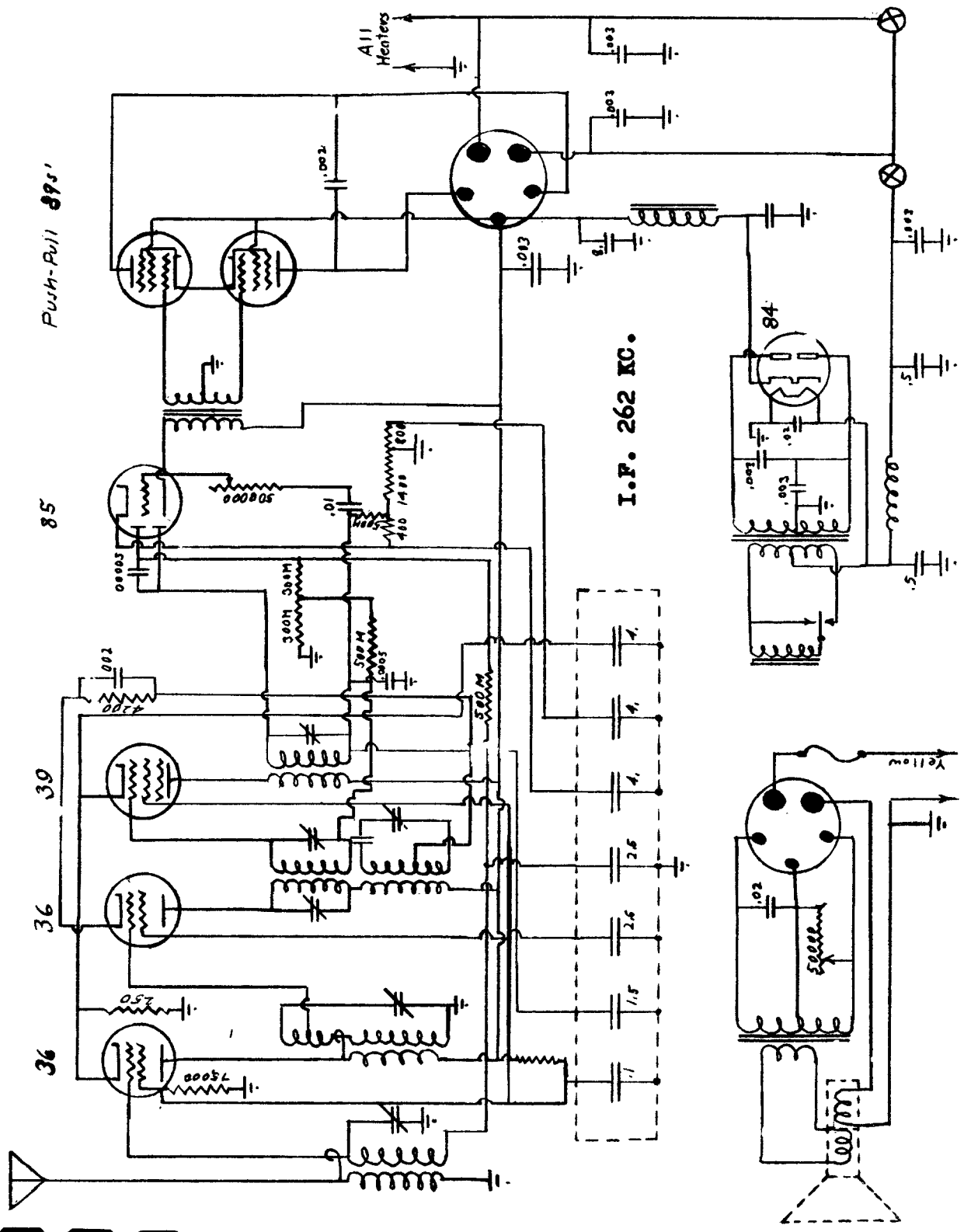

COMPILED BY M. N. BEITMAN, SUPREME PUBLICATIONS

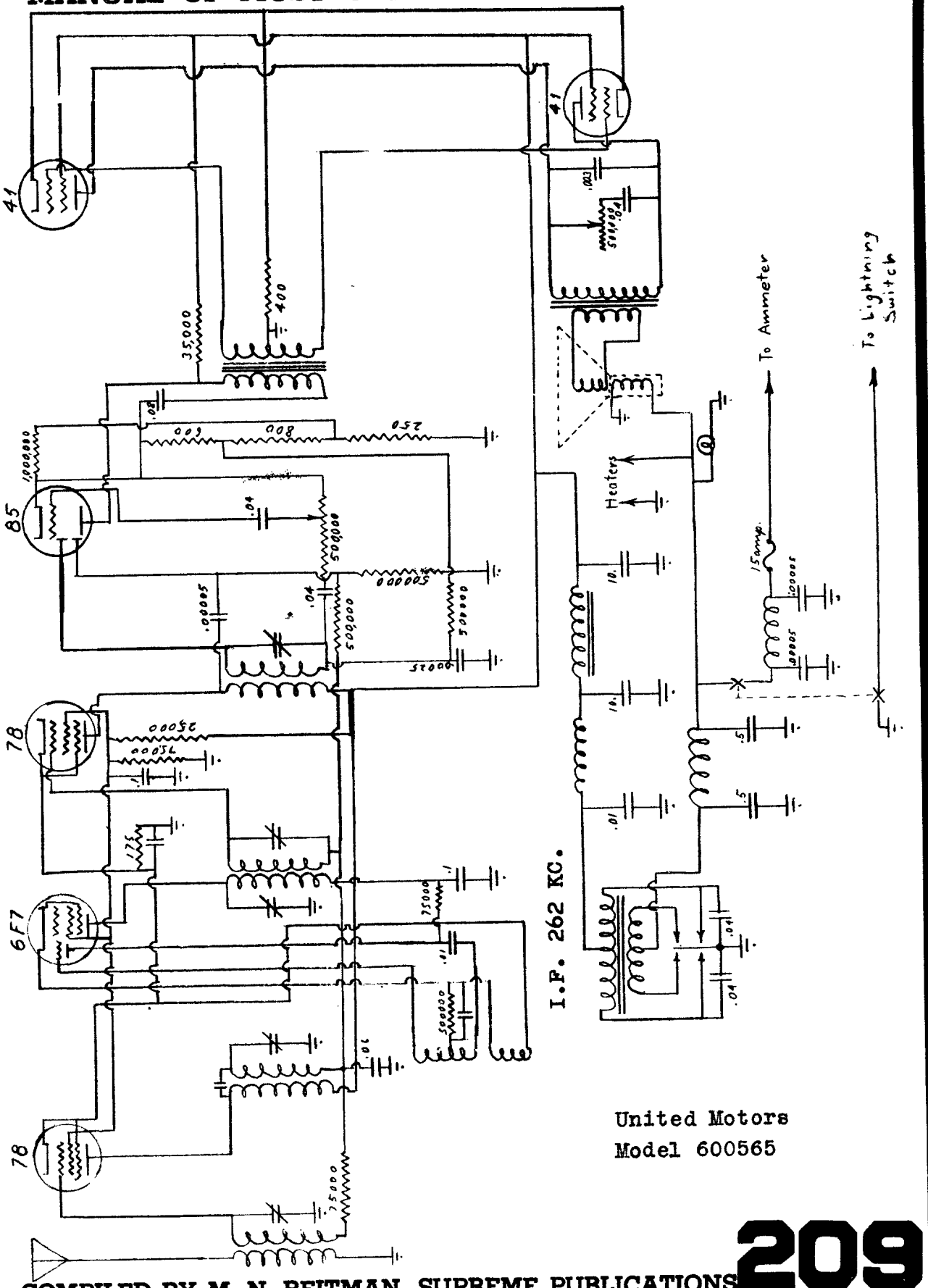

United Motors
Model 600565

United Motors
Model 601574
Chevrolet

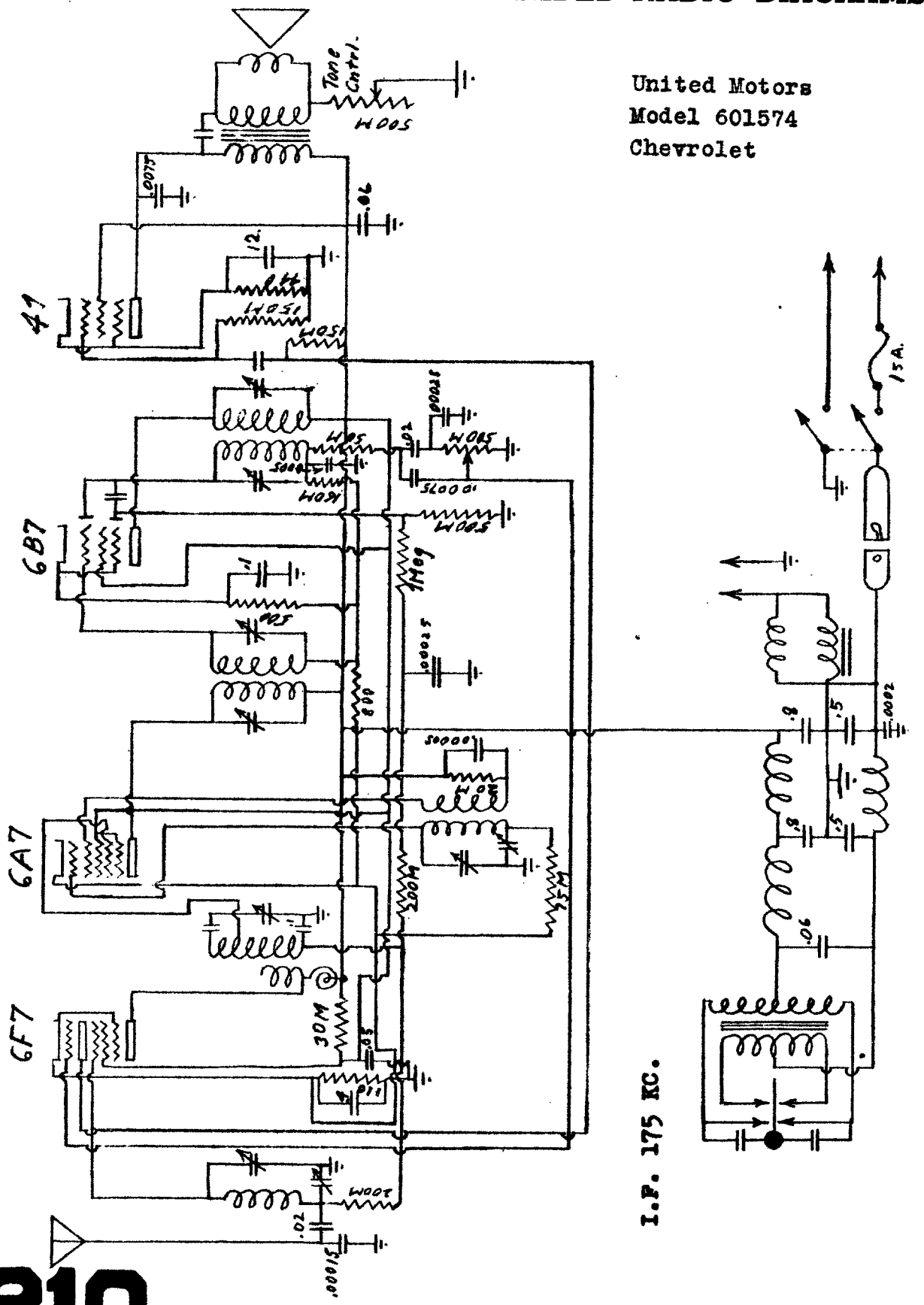

COMPILED BY M. N. BEITMAN, SUPREME PUBLICATIONS

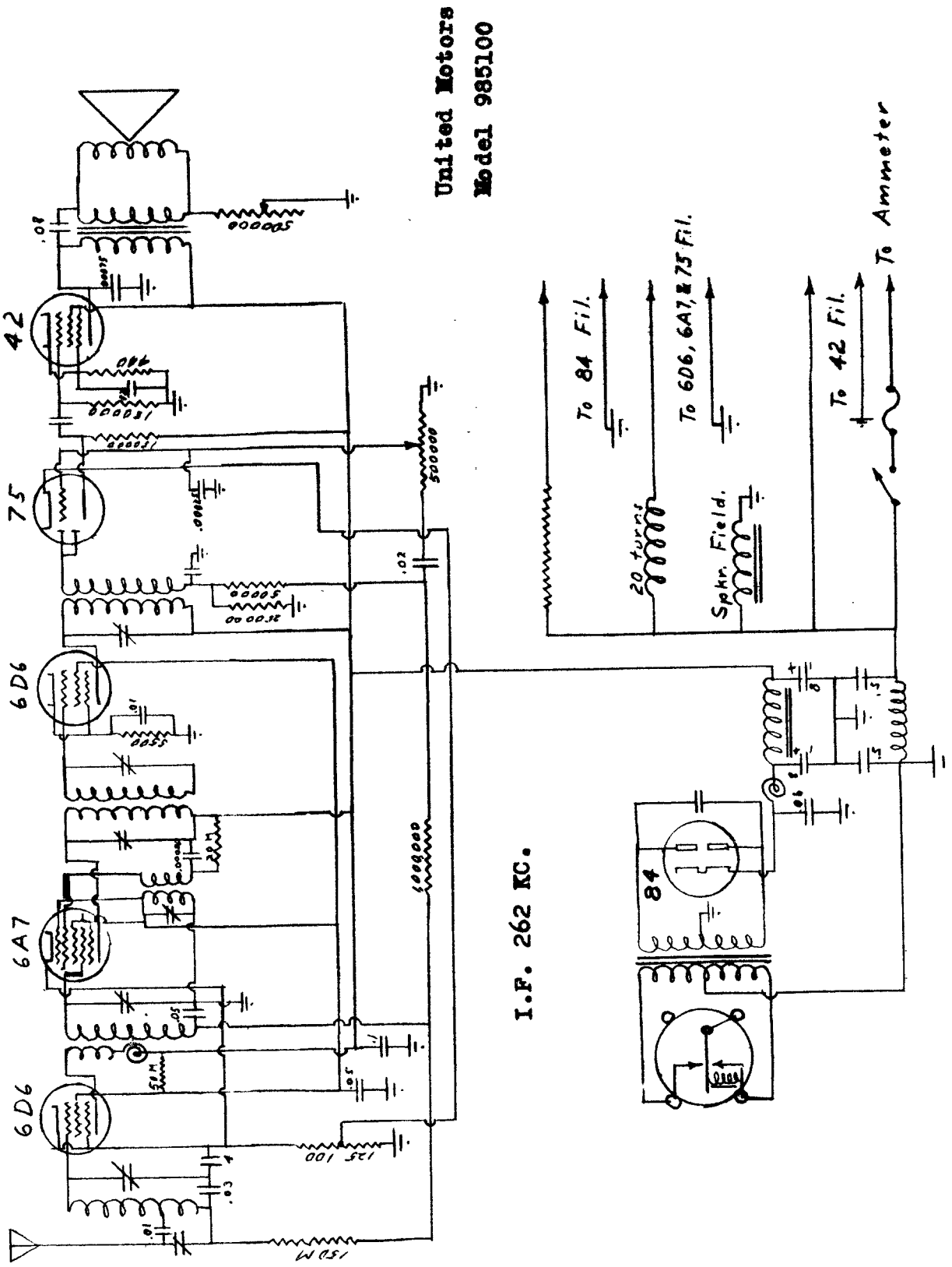
United Motors
Model 985100
42
75
6D6
6A7
6D6
84
To 84 Fil.
To 6D6, 6A7, & 75 Fil.
To 42 Fil.
To Ammeter
20 turns
Spkr. Field.
I.F. 262 KC.

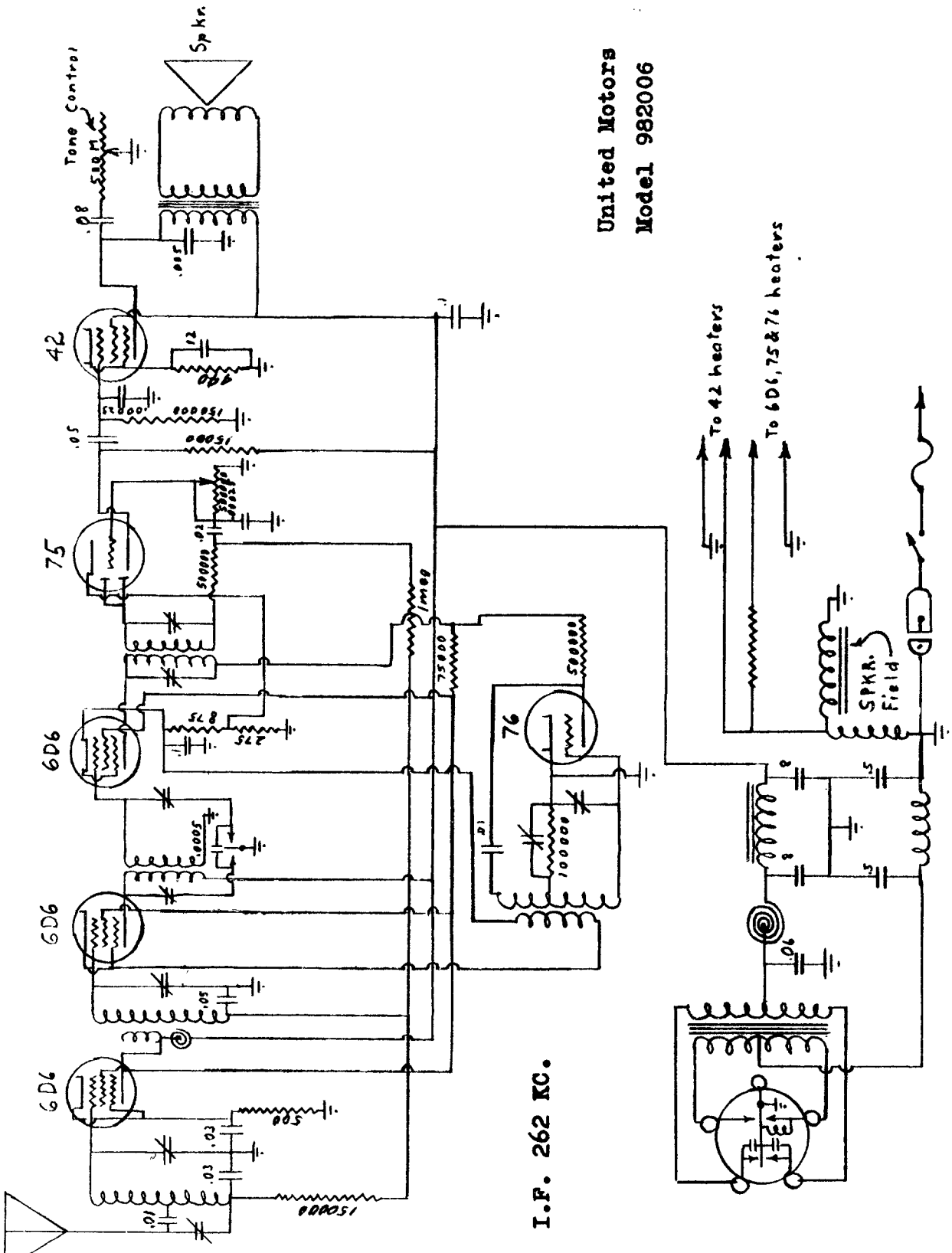

United Motors
Model 982006

COMPILED BY M. N. BEITMAN, SUPREME PUBLICATIONS

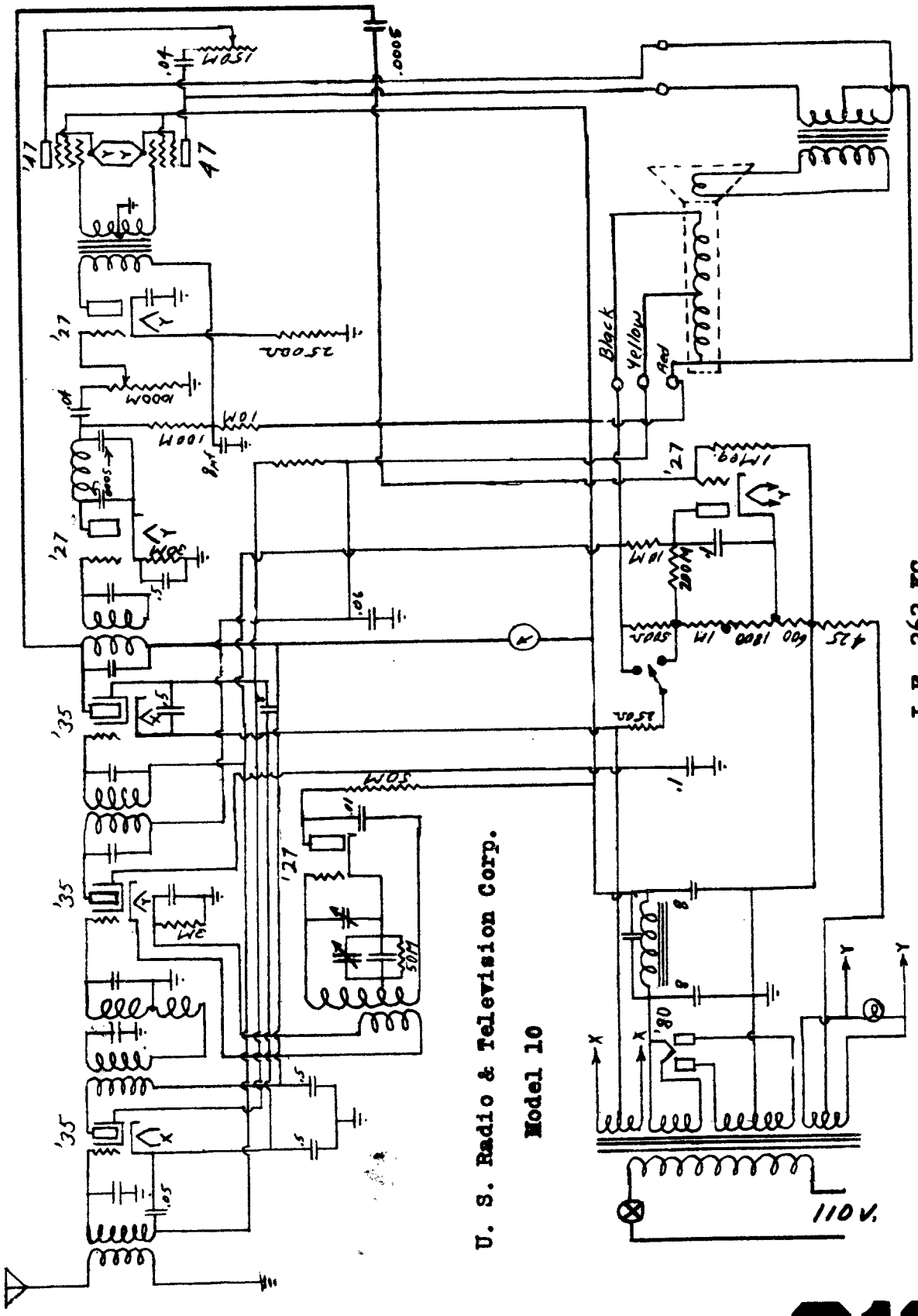

U. S. Radio & Television Corp.

Model 10

I.F. 262 KC.

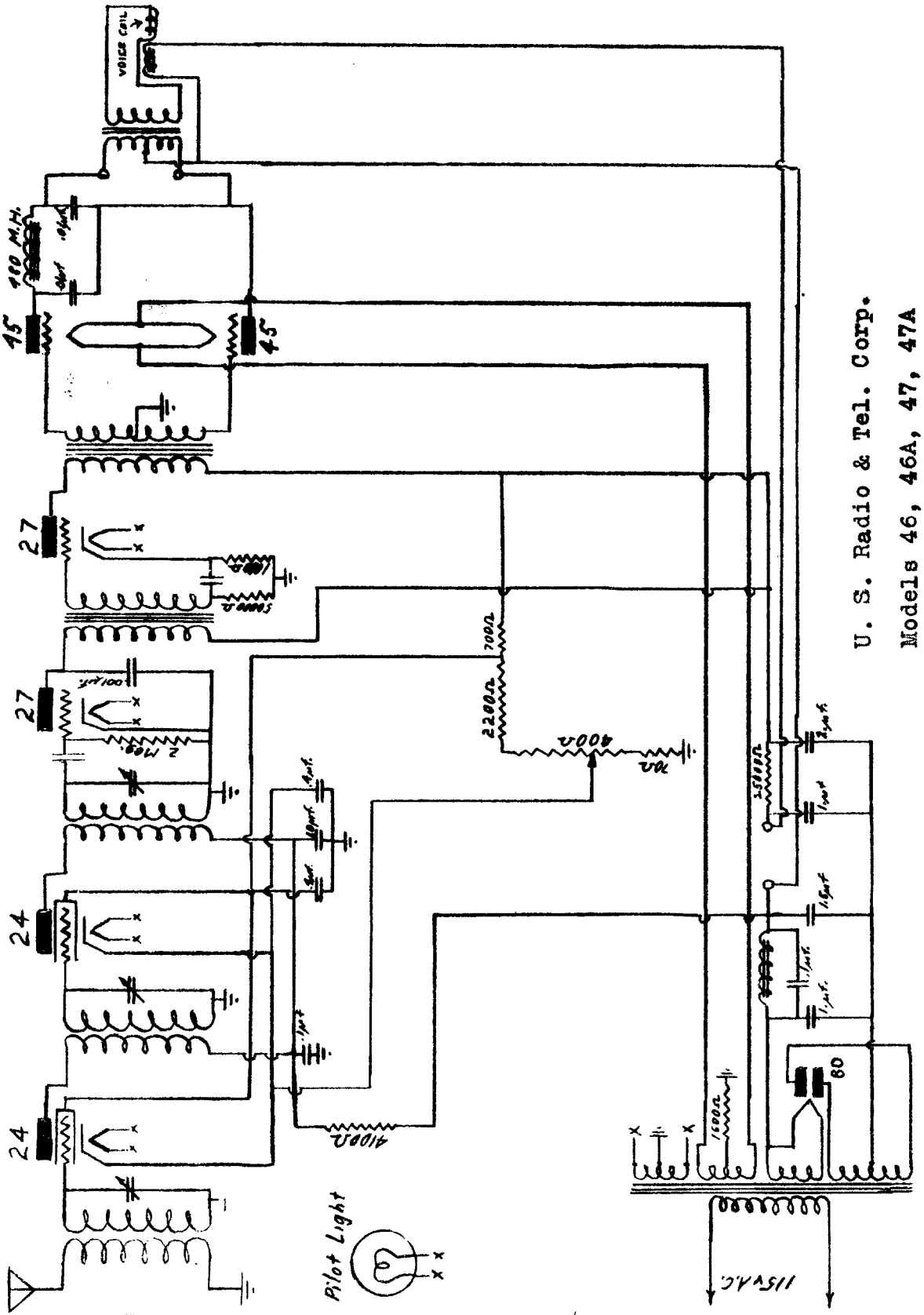

U. S. Radio & Tel. Corp.

Models 46, 46A, 47, 47A
Apex

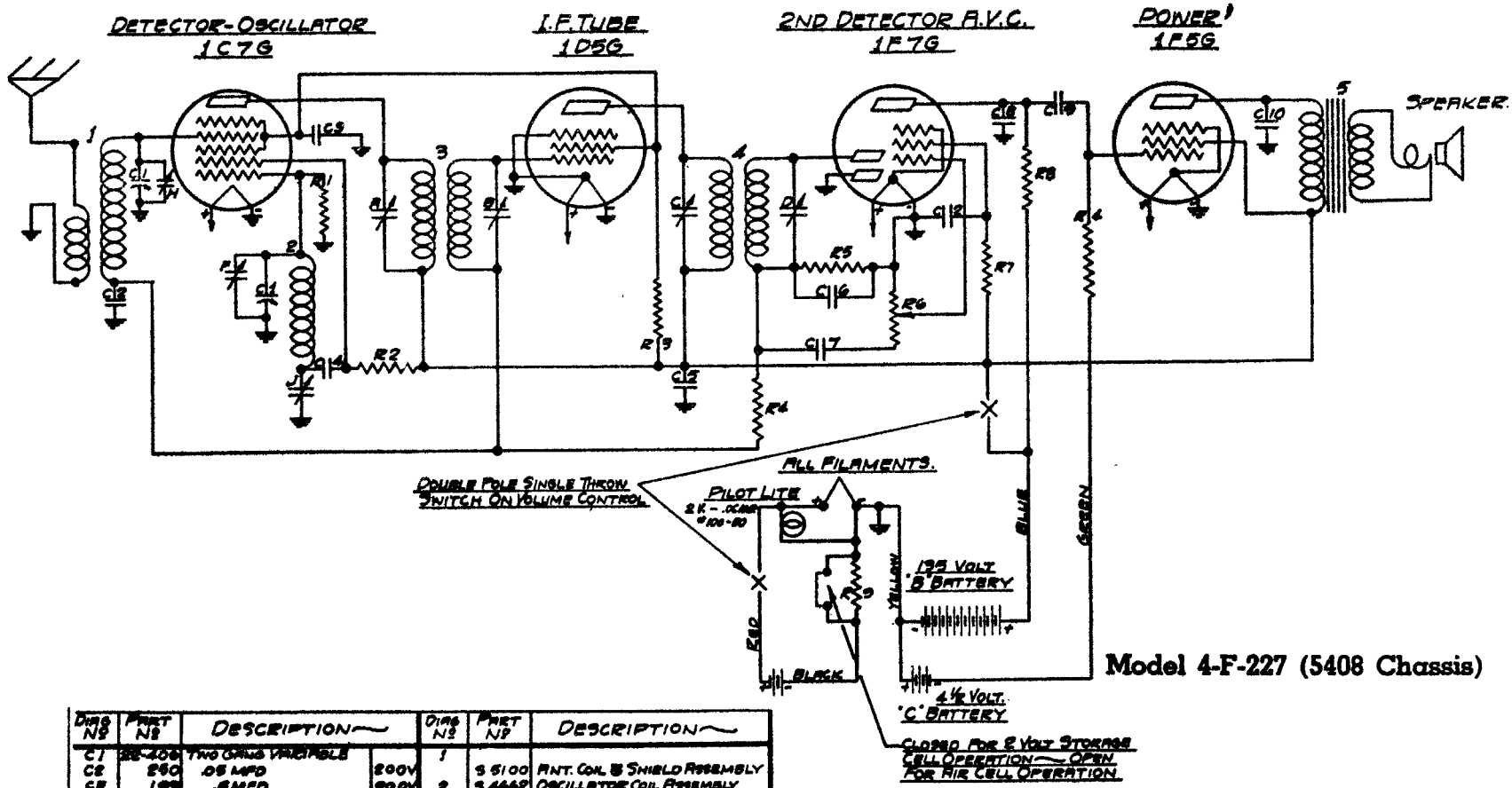

Model 4-F-227 (5408 Chassis)

Diag No	Part No	Description		Diag No	Part No	Description
C1	25-206	Two Gang Variable		1	S 5100	Ant. Coil & Shield Assembly
C2	260	.05 MFD	200V	2	S 4662	Oscillator Coil Assembly
C3	198	.5 MFD	200V	3	95-419	1st. I.F. Transformer
C4	198	.002 MFD	600V	4	95-420	2nd. I.F. Transformer
C5	218	.05 MFD	400V	5	———	Speaker Terms. (On Speaker)
C6	162	.0001 MFD	600V			
C7	327	.02 MFD	200V			Variable Trimmers.—
C8	147	.0005 MFD	600V	A		1st. I.F. Transformer Primary
C9	188	.02 MFD	400V	B		1st. I.F. Transformer Secondary
C10	498	.002 MFD	600V	C		2nd. I.F. Transformer Primary
				D		2nd. I.F. Transformer Secondary
R1	68-599	47 M Ohm	¼W ± 20	F		Broadcast Oscillator (On Gang)
R2	638	5600 Ohm	¼W ± 10	H		Antenna Broadcast (On Gang)
R3	647	59 M Ohm	¼W ± 10	J		#22-519 Oscillator Proper.
R4	271	1 Megohm	¼W ± 20			
R5	658	590 M Ohm	¼W ± 10			
R6	548	1 Megohm Volume Control			Model	Speaker
R7	441	1 Megohm	¼W ± 10		4F227	49-209 — 6"
R8	657	330 M Ohm	¼W ± 10			
R9	684	.04 Ohm (Wire Wound)	¼W ± 10			

I.F. Frequency 456 K.C.

4 Tube Battery Superheterodyne

Chassis No 5408

Zenith Radio Corporation

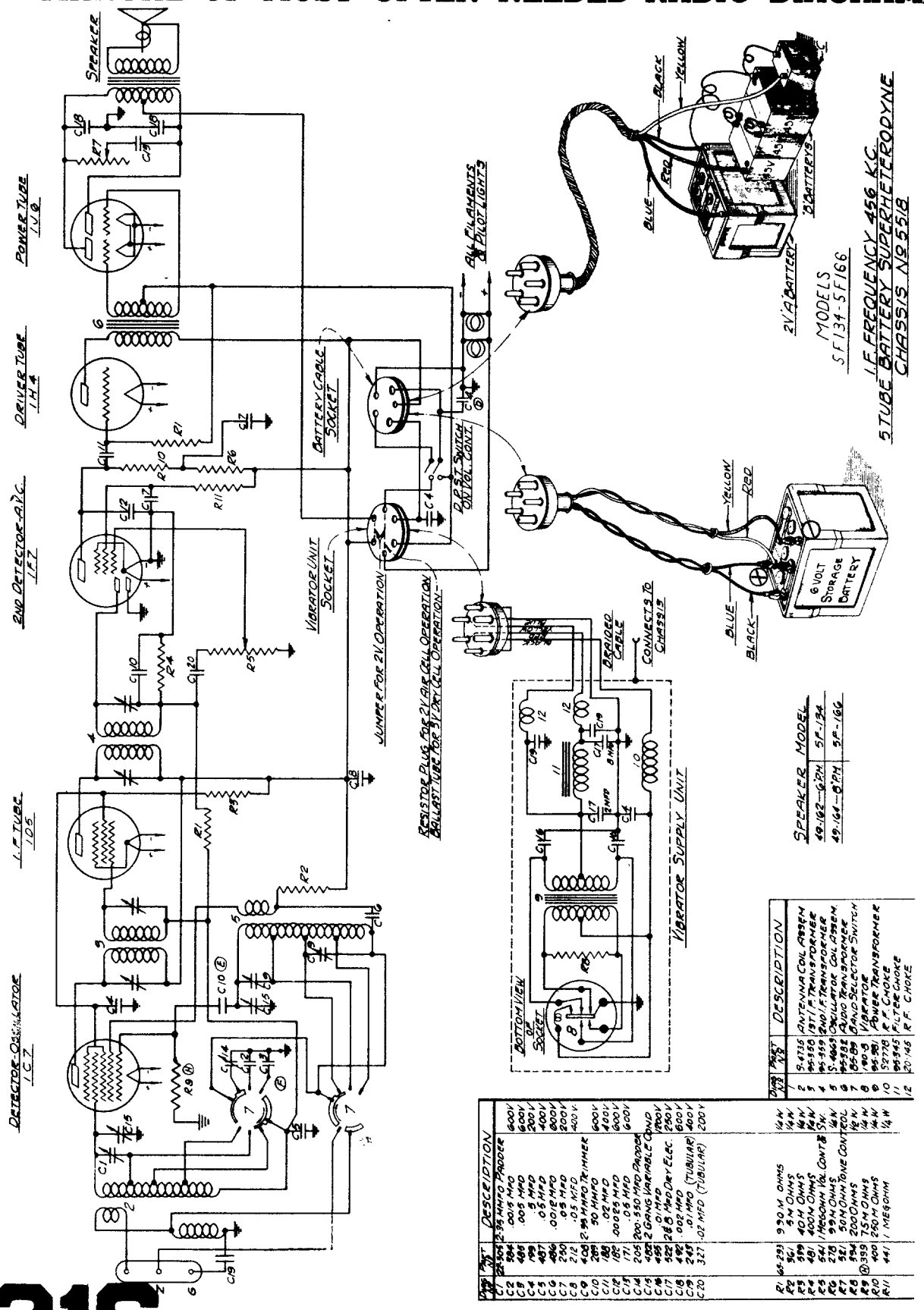
SPEAKER
POWER TUBE 1V8
DRIVER TUBE 1H4
2ND DETECTOR-A.V.C. 1F7
I.F. TUBE 1D5
DETECTOR-OSCILLATOR 1C7
BATTERY CABLE SOCKET
VIBRATOR UNIT SOCKET
JUMPER FOR 2V OPERATION
RESISTOR PLUG FOR 2V A/B CELL OPERATION
BALLAST TUBE FOR 3V DRY CELL OPERATION
ALL FILAMENTS & PILOT LIGHTS
D.P.S.T. SWITCH ON VOL. CONT.
BLACK
YELLOW
RED
BLUE
2V A BATTERY
2V B BATTERY
6 VOLT STORAGE BATTERY
BRAIDED CABLE
CONNECTS TO CHASSIS
BOTTOM VIEW OF SOCKET
VIBRATOR SUPPLY UNIT
MODELS SF134-SF166
I.F. FREQUENCY 456 K.C.
5 TUBE BATTERY SUPERHETERODYNE
CHASSIS No 5518
ZENITH RADIO CORPORATION
SPEAKER MODEL
49-162—6.2PM SF-134
49-164—8.2PM SF-166
DESCRIPTION
ANTENNA COIL ASSEM.
1ST I.F. TRANSFORMER
2ND I.F. TRANSFORMER
OSCILLATOR COIL ASSEM.
AUDIO TRANSFORMER
BAND SELECTOR SWITCH
VIBRATOR
POWER TRANSFORMER
R.F. CHOKE
FILTER CHOKE
R.F. CHOKE

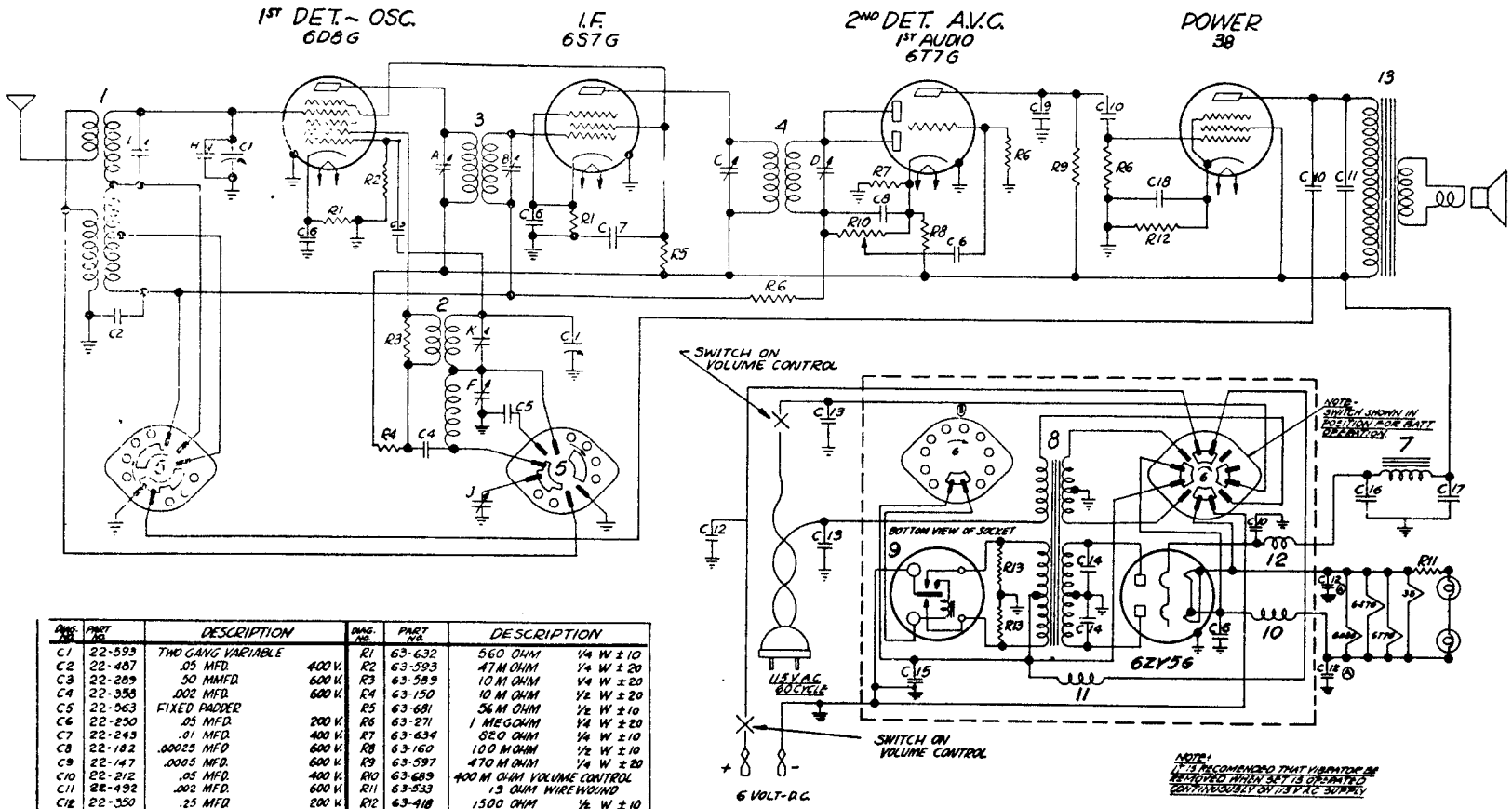

DIAG. NO.	PART NO.	DESCRIPTION	
C1	22-599	TWO GANG VARIABLE	
C2	22-487	.05 MFD.	400 V.
C3	22-289	50 MMFD.	600 V.
C4	22-358	.002 MFD.	600 V.
C5	22-563	FIXED PADDER	
C6	22-250	.05 MFD.	200 V.
C7	22-243	.01 MFD.	400 V.
C8	22-182	.00025 MFD	600 V.
C9	22-147	.0005 MFD.	600 V.
C10	22-212	.05 MFD.	400 V.
C11	22-492	.002 MFD.	600 V.
C12	22-350	.25 MFD	200 V.
C13	22-435	.02 MFD.	600 V.
C14	22-574	.02 MFD.	600 V.
C15	22-199	.5 MFD.	200 V.
C16		8 MFD ELECTROLYTIC	250 V.
C17	22-577	8 MFD "	250 V.
C18		10 MFD "	25 V.

	VARIABLE TRIMMERS
A	1ST I.F. TRANSFORMER PRIMARY
B	1ST I.F. TRANSFORMER SECONDARY
C	2ND I.F. TRANSFORMER PRIMARY
D	2ND I.F. TRANSFORMER SECONDARY
F	BROADCAST OSCILLATOR (see note)
H	ANTENNA BROADCAST (on gang)
J	#22-519 BROADCAST PADDER
K	SHORT WAVE OSCILLATOR (see note)
L	SHORT WAVE DETECTOR (see note)

NOTE— TRIMMERS F, K, & L MOUNTED ON BAKELITE STRIP #ER-324

DIAG. NO.	PART NO.	DESCRIPTION	
R1	63-632	560 OHM	1/4 W ± 10
R2	63-593	47 M OHM	1/4 W ± 20
R3	63-589	10 M OHM	1/4 W ± 20
R4	63-150	10 M OHM	1/2 W ± 20
R5	63-681	56 M OHM	1/2 W ± 10
R6	63-271	1 MEGOHM	1/4 W ± 20
R7	63-634	820 OHM	1/4 W ± 10
R8	63-160	100 M OHM	1/2 W ± 10
R9	63-597	470 M OHM	1/4 W ± 20
R10	63-689	400 M OHM VOLUME CONTROL	
R11	63-533	13 OHM WIRE WOUND	
R12	63-418	1500 OHM	1/2 W ± 10
R13	63-577	100 OHM	1/4 W ± 20
1	5-5303	ANT. COIL & SHIELD ASSEMBLY	
2	5-4909	OSCILLATOR COIL ASSEMBLY	
3	95-443	1ST I.F. TRANSFORMER	
4	95-444	2ND I.F. TRANSFORMER	
5	85-104	BAND SELECTOR SWITCH	
6	85-425	POWER SUPPLY SWITCH	
7	95-298	POWER CHOKE	
8	95-425	POWER TRANSFORMER	
9	190-11	VIBRATOR	
10	5-2778	R.F. CHOKE ASSEMBLY	
11	5-5048	R.F. CHOKE ASSEMBLY	
12	20-82	R.F. CHOKE	
13		SPEAKER TRANSFORMER	

I.F. FREQUENCY 456 K.C.
5 TUBE BATTERY SUPERHETERODYNE
6 VOLT D.C. + 115 VOLT A.C.
CHASSIS № 5524

ZENITH RADIO CORP.

Models 5-J-217, 5-J-247, 5-J-255 (5524 Chassis)

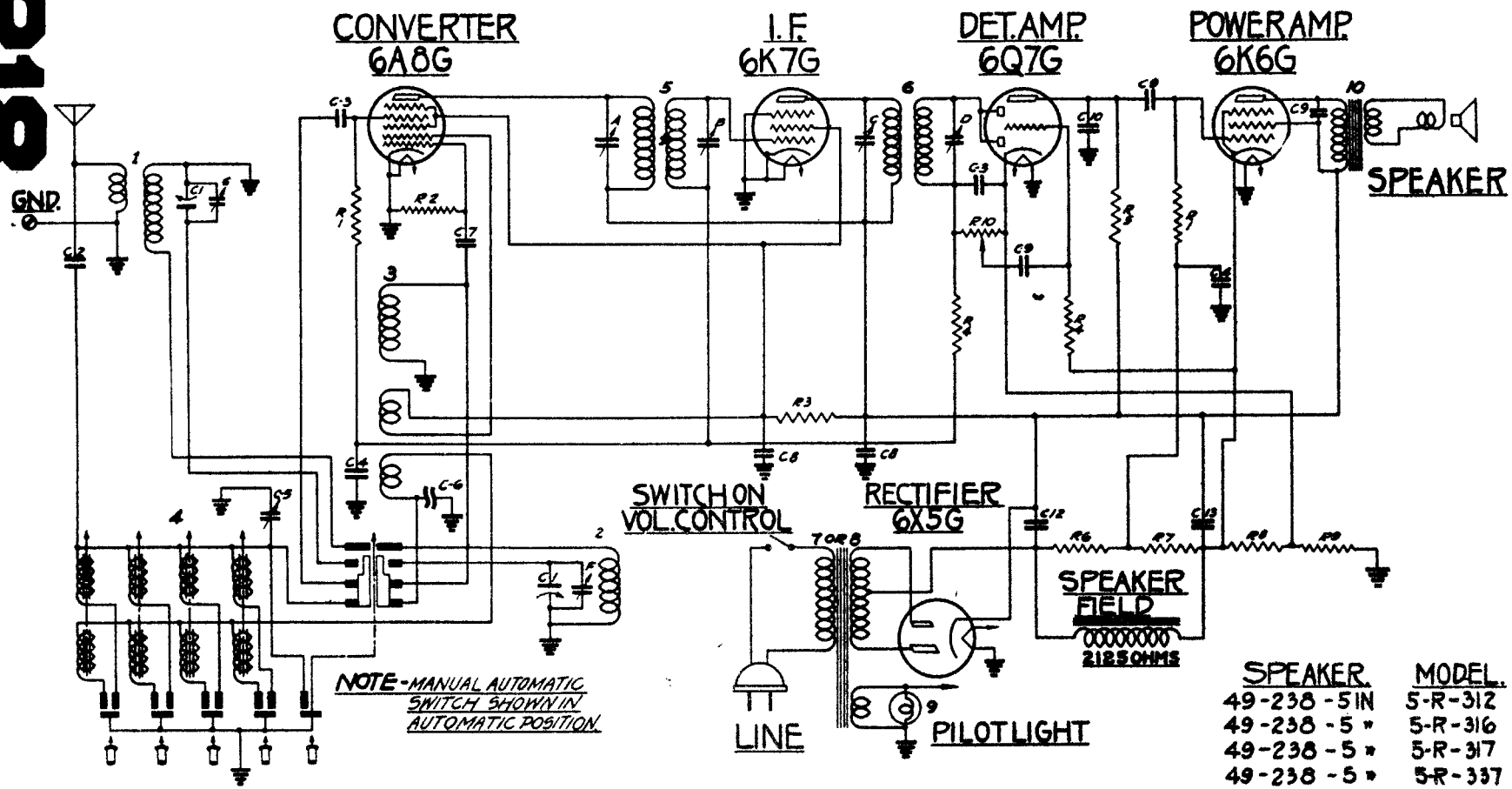

SPEAKER	MODEL
49-238-5 IN	5-R-312
49-238-5 "	5-R-316
49-238-5 "	5-R-317
49-238-5 "	5-R-337
49-238-5 "	5-R-303

DIAG Nº	PART Nº	DESCRIPTION		DIAG Nº	PART Nº	DESCRIPTION		DIAG Nº	PART Nº	DESCRIPTION
C-1	22-695	TWO GANG VAR. COND.		R-1	63-597	470 M OHM	1/4 W	4		
C-2	22-289	50 M.M.F.D.	600V	R-2	63-593	47 M OHM	1/4 W	5	95-513	1 ST. I.F. TRANS.
C-3	22-162	.0001 M.F.D.	600V	R-3	63-208	12 M OHM	1 W	6	95-520	2 ND I.F. TRANS.
C-4	22-250	.05 M.F.D.	200V	R-4	63-271	1 MEGOHM	1/4 W	7	95-521	POWER TRANS. (117V. 50-60~
C-5	22-519	TRIMMER COND.		R-5	63-296	220 M OHM	1/4 W	8	95-523	POWER TRANS. 25~
C-6	22-729	COMPENSATING COND.		R-6	63-658	390 M OHM	1/4 W	9	100-36	PILOT LIGHT .25A 6.3V
C-7	22-182	.00025 M.F.D.	600V	R-7	63-260	100 M OHM	1/4 W	10		SPEAKER TRANS
C-8	22-212	.05 M.F.D.	400V	R-8	63-563	80 OHM WIRE WOUND	1/4 W			
C-9	22-196	.01 M.F.D.	600V	R-9	63-686	150 OHM WIRE WOUND	1/2 W	A		1 ST. I.F. TRANS. PRI.
C-10	22-147	.0005 M.F.D.	600V	R-10	63-955	220 M OHM VOL. CONT.		B		1 ST. I.F. TRANS. SEC
								C		2 ND I.F. TRANS. PRI
C-12	22-691	8 M.F.D. ELECTROLYTIC	450V	1	5-5808	ANTENNA COIL ASSEM.		D		2 ND I.F. TRANS. SEC
C-13	22-692	8 M.F.D. ELECTROLYTIC	350V	2	5-6039	OSC. COIL ASSEM.		F		BROADCAST OSC. (ON GANG)
				3	20-187	COMPENSATING COIL		G		ANTENNA - BRO CASTT ON GANG)

I.F. FREQUENCY 455 K.C.
5 TUBE SUPERHETERODYNE
CHASSIS Nº 5528 A.C.
ZENITH RADIO CORPORATION

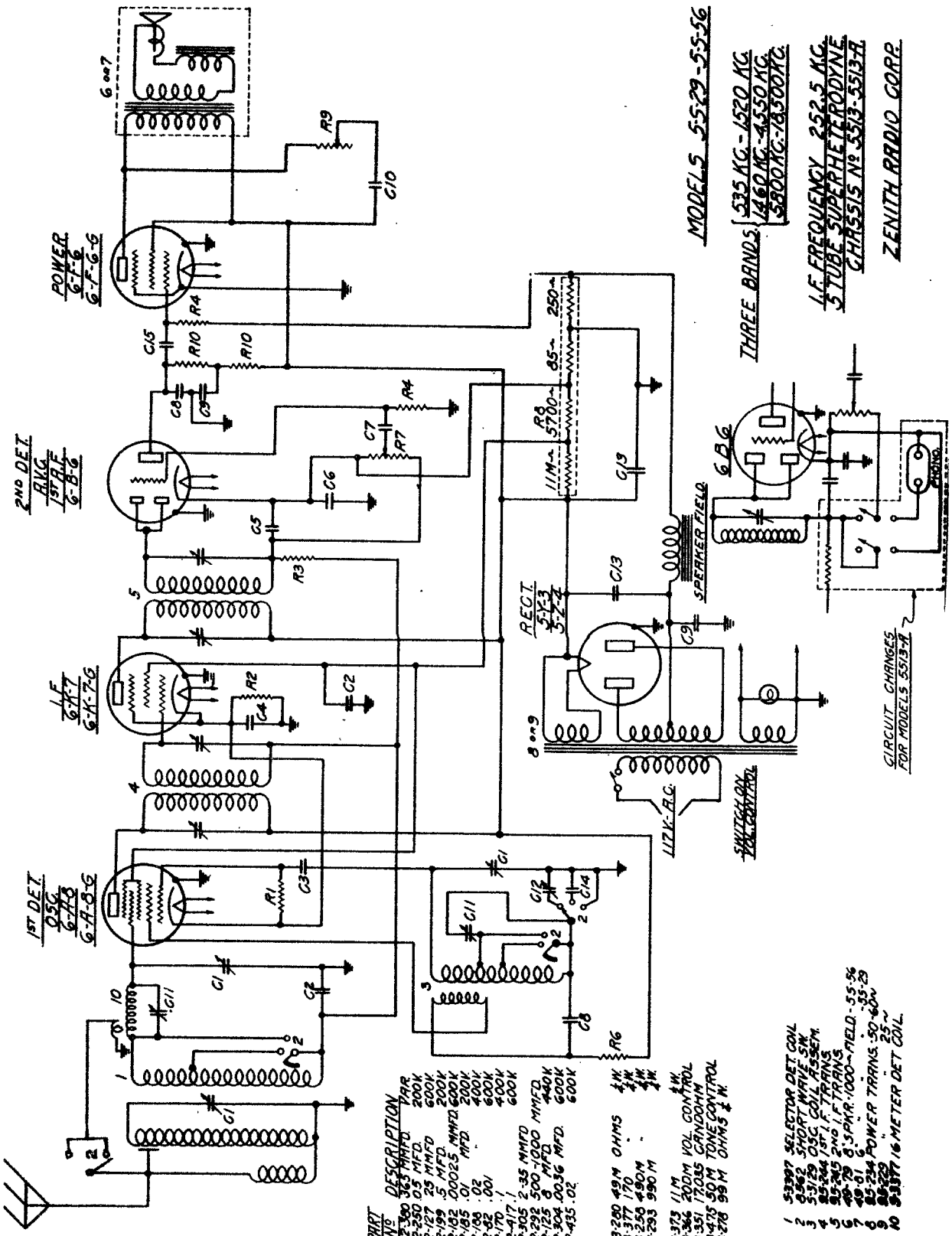
MODELS 5-5-29-5-5-56
THREE BANDS 535 KC.-1520 KC. 1460 KC.-4350 KC. 5800 KC.-18,500 KC.
I.F. FREQUENCY 252.5 KC.
5 TUBE SUPERHETERODYNE
CHASSIS Nº 5513-5513-A
ZENITH RADIO CORP.
POWER 6-F-6 6-F-6
2ND DET. AVC 1ST A.F. 6-B-6
I.F. 6-K-7 6-K-7-G
1ST DET. OSC. 6-A-8 6-A-8-G
RECT. 5-Y-3 5-Z-4
6-B-6
SPEAKER FIELD
PHONO
CIRCUIT CHANGES FOR MODELS 5513-A
117V.-A.C.
SWITCH ON VOL. CONTROL
PART No. DESCRIPTION
C1 22-380 365 MMFD. VAR.
C2 22-250 .05 MFD. 200V.
C3 22-127 25 MMFD 600V.
C4 22-199 .5 MFD. 200V.
C5 22-102 .00025 MMFD. 600V.
C6 22-185 .01 MFD 400V.
C7 22-108 .02 400V.
C8 22-92 .001 400V.
C9 22-170 .1 400V.
C10 22-417 .1 600V.
C11 22-305 2-35 MMFD
C12 22-292 500-1000 MMFD.
C13 22-125 8 MFD. 440V.
C14 22-304 .0036 MFD. 600V.
C15 22-435 .02 600V.
R1 63-280 49M OHMS ½W.
R2 63-377 170 " ½W.
R3 63-256 490M " ½W.
R4 63-293 990M " ½W.
R5 63-373 11M ½W.
R6 63-364 200M VOL. CONTROL
R7 63-351 17.035 CANOHM
R8 63-475 50M TONE CONTROL
R9 63-478 99M OHMS ½W.
R10 63-378 99M " ½W.
1 53-397 SELECTOR DET. COIL
2 53-62 SHORT WAVE SW.
3 53-129 OSC. COIL ASSEM.
4 85-244 1ST I.F. TRANS.
5 85-245 2ND I.F. TRANS.
6 49-79 8.5 PKR. 1000~ FIELD - 55-56
7 49-01 " " " " 55-29
8 85-234 POWER TRANS. 50-60~
9 85-229 " " 25~
10 53-177 16 METER DET COIL.

Models 5-S-201, 5-S-218, 5-S-220, 5-S-228, 5-S-237, 5-S-250, 5-S-252
(5521 Chassis)

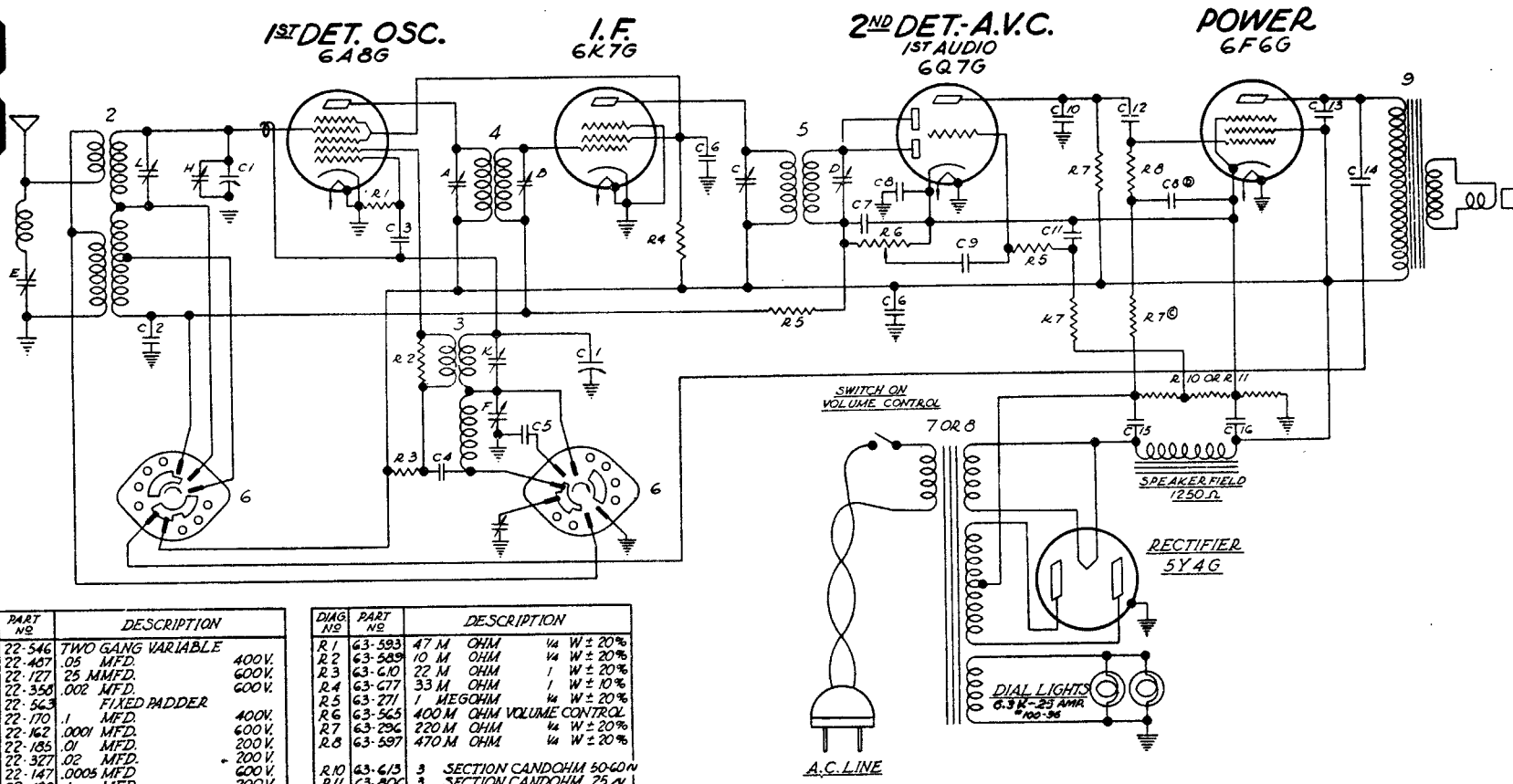

DIAG Nº	PART Nº	DESCRIPTION
C1	22-546	TWO GANG VARIABLE
C2	22-467	.05 MFD. 400V.
C3	22-127	25 MMFD. 600V.
C4	22-358	.002 MFD. 600V.
C5	22-563	FIXED PADDER
C6	22-170	.1 MFD. 400V.
C7	22-162	.0001 MFD. 600V.
C8	22-185	.01 MFD. 200V.
C9	22-327	.02 MFD. 200V.
C10	22-147	.0005 MFD 600V.
C11	22-190	.1 MFD 200V.
C12	22-435	.02 MFD. 600V.
C13	22-492	.002 MFD. 600V.
C14	22-171	.05 MFD 600V.
C15	22-596	8 MFD DRY ELECTROLYTIC 450V
C16		14 MFD DRY ELECTROLYTIC 450V

VARIABLE TRIMMERS	
A	1ST I.F. TRANS. PRIMARY
B	1ST I.F. TRANS. SECONDARY
C	2ND I.F. TRANS. PRIMARY
D	2ND I.F. TRANS. SECONDARY
E	#22-570 WAVE TRAP
F	BROADCAST OSCILLATOR (SEE NOTE)
H	ANTENNA BROADCAST (ON GANG)
J	#22-519 BROADCAST PADDER
K	SHORT WAVE OSCILLATOR (SEE NOTE)
L	SHORT WAVE DETECTOR #22-305

TRIMMERS F & K MOUNTED ON BAKELITE STRIP #22-408

DIAG Nº	PART Nº	DESCRIPTION
R1	63-593	47 M OHM ¼ W ± 20%
R2	63-589	10 M OHM ¼ W ± 20%
R3	63-610	22 M OHM 1 W ± 20%
R4	63-677	33 M OHM 1 W ± 10%
R5	63-271	1 MEGOHM ¼ W ± 20%
R6	63-565	400 M OHM VOLUME CONTROL
R7	63-296	220 M OHM ¼ W ± 20%
R8	63-597	470 M OHM ¼ W ± 20%
R10	63-613	3 SECTION CANDOHM 50-60 ~
R11	63-806	3 SECTION CANDOHM 25 ~
1		WAVE TRAP COIL MOUNTED ON ANTENNA COIL ASSEMBLY
2	5-4934	ANT COIL & SHIELD ASSEMBLY
3	5-4909	OSCILLATOR COIL ASSEMBLY
4	95-407	1ST I.F. TRANSFORMER
5	95-408	2ND I.F. TRANSFORMER
6	85-104	BAND SELECTOR SWITCH
7	95-406	POWER TRANSFORMER 117 VOLT 50-60 CYCLE
8	95-452	POWER TRANSFORMER ALL VOLTAGE 25 CYCLE
9		SPEAKER TRANSFORMER

MODEL	SPEAKER	
5-S-218	49-178	5"
5-S-220	49-178	5"
5-S-228	49-178	5"
5-S-237	49-180	6"
5-S-250	49-179	8"
5-S-252	49-208	10"

I.F.-FREQUENCY 456K.C.
5 TUBE SUPERHETERODYNE
2 BAND
CHASSIS Nº 5521

ZENITH RADIO CORP.

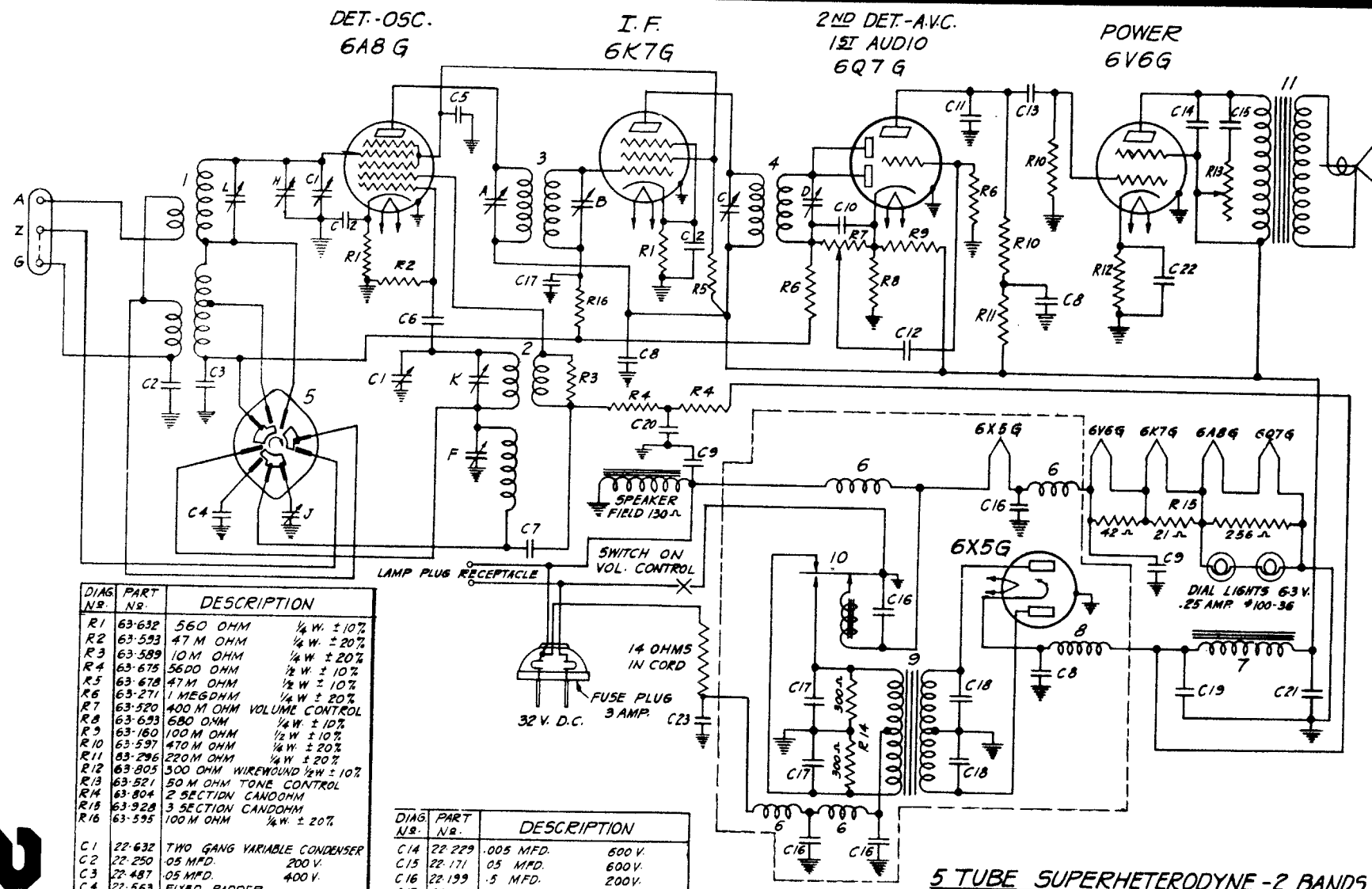

DIAG. NO.	PART NO.	DESCRIPTION	
R1	63-632	560 OHM	¼ W. ± 10%
R2	63-593	47 M OHM	¼ W. ± 20%
R3	63-589	10 M OHM	¼ W. ± 20%
R4	63-675	5600 OHM	½ W. ± 10%
R5	63-678	47 M OHM	½ W ± 10%
R6	63-271	1 MEGOHM	¼ W ± 20%
R7	63-520	400 M OHM VOLUME CONTROL	
R8	63-693	680 OHM	¼ W. ± 10%
R9	63-160	100 M OHM	½ W ± 10%
R10	63-597	470 M OHM	¼ W. ± 20%
R11	83-296	220 M OHM	¼ W ± 20%
R12	63-805	300 OHM WIREWOUND	½ W ± 10%
R13	63-521	50 M OHM TONE CONTROL	
R14	63-804	2 SECTION CANDOHM	
R15	63-928	3 SECTION CANDOHM	
R16	63-595	100 M OHM	¼ W. ± 20%
C1	22-632	TWO GANG VARIABLE CONDENSER	
C2	22-250	.05 MFD.	200 V.
C3	22-487	.05 MFD.	400 V.
C4	22-563	FIXED PADDER	
C5	22-212	.05 MFD	400 V.
C6	22-127	25 MMFD	600 V.
C7	22-358	.002 MFD.	600 V.
C8	22-170	1 MFD.	400 V.
C9	22-350	.25 MFD	200 V.
C10	22-162	.0001 MFD.	600 V.
C11	22-147	.0005 MFD	600 V.
C12	22-327	.02 MFD	200 V.
C13	22-435	.02 MFD	600 V.

DIAG. NO.	PART NO.	DESCRIPTION	
C14	22-229	.005 MFD.	600 V.
C15	22-171	.05 MFD.	600 V.
C16	22-199	.5 MFD.	200 V.
C17	22-185	.01 MFD.	200 V.
C18	22-646	.1 MFD.	1000 V.
C19	22-647	8 MFD. DRY ELECT.	450 V.
C20		8 MFD. DRY ELECT.	450 V.
C21	22-648	16 MFD. DRY ELECT.	450 V.
C22		10 MFD DRY ELECT.	25 V.
C23	22-243	.01 MFD.	400 V.

5 TUBE SUPERHETERODYNE - 2 BANDS

I.F. FREQUENCY - 456 K.C.

32 V. D.C. CHASSIS No. 5523

ZENITH RADIO CORPORATION

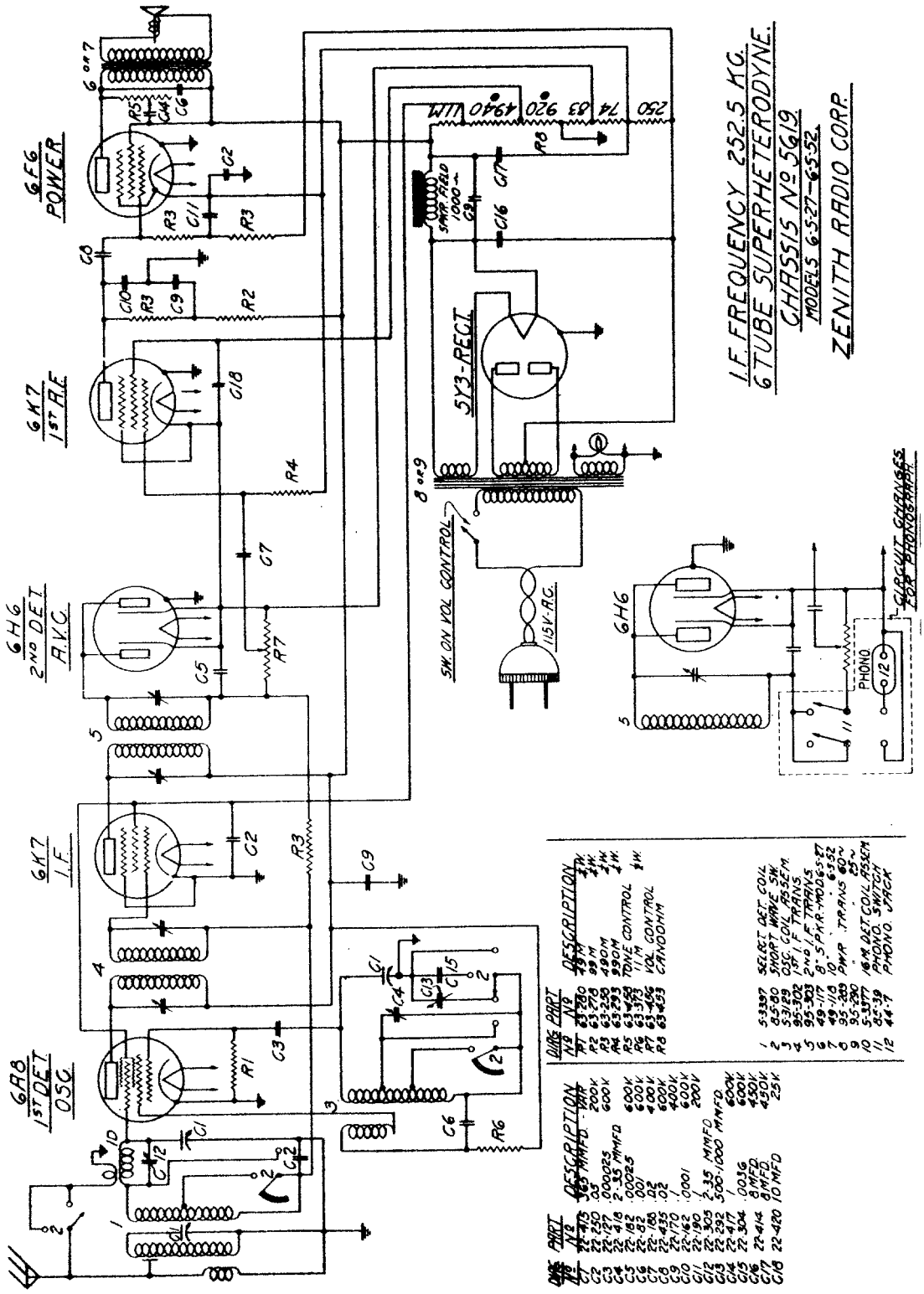
I.F. FREQUENCY 252.5 KC.
6 TUBE SUPERHETERODYNE.
CHASSIS No 5619
MODELS 6-5-27—6-5-32
ZENITH RADIO CORP.
6F6 POWER
6K7 1ST A.F.
6H6 2ND DET A.V.C.
6K7 I.F.
6A8 1ST DET OSC
5Y3-RECT.
6H6
SW. ON VOL. CONTROL
115V-A.C.
PHONO
CIRCUIT CHANGES FOR PHONOGRAPH
DESCRIPTION
SELECT. DET. COIL
SHORT WAVE SW.
OSC. COIL ASSEM
2ND I.F. TRANS
8.5 H.R. MODEL 5-27
PWR. TRANS 6-5-32
16 M. DET. COIL ASSEM
PHONO. SWITCH
PHONO. JACK
VOL. CONTROL
CANOHM
TONE CONTROL
DESCRIPTION
.00025 MMFD
2.35 MMFD
.0016
8 MFD
10 MFD

Models 6-S-128, 6-S-137, 6-S-147, 6-S-152, 6-S-157. (Chassis No. 5634)

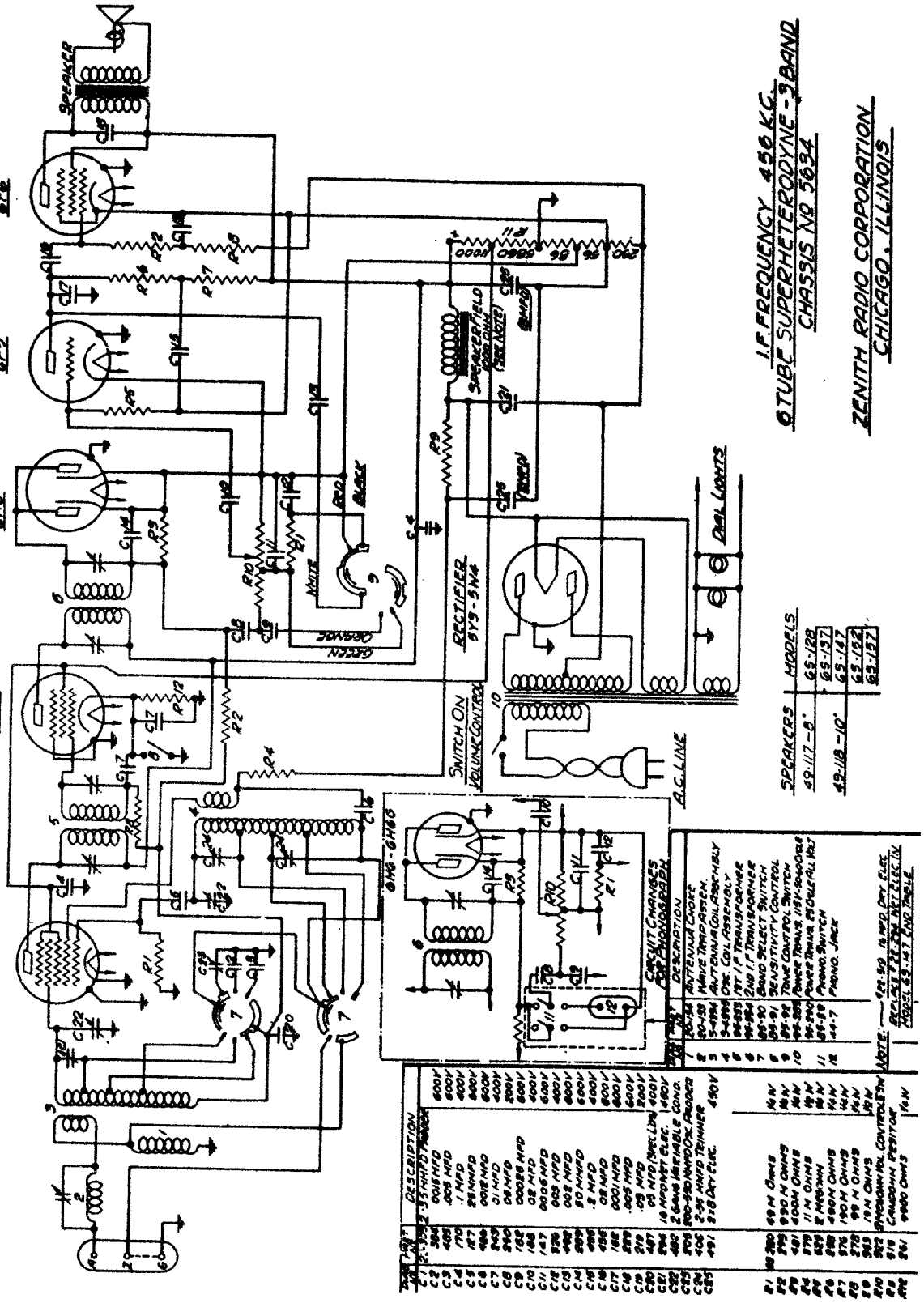

Models 6-S-203, 6-S-222, 6-S-223, 6-S-229, 6-S-239, 6-S-241 (5638 Chassis)

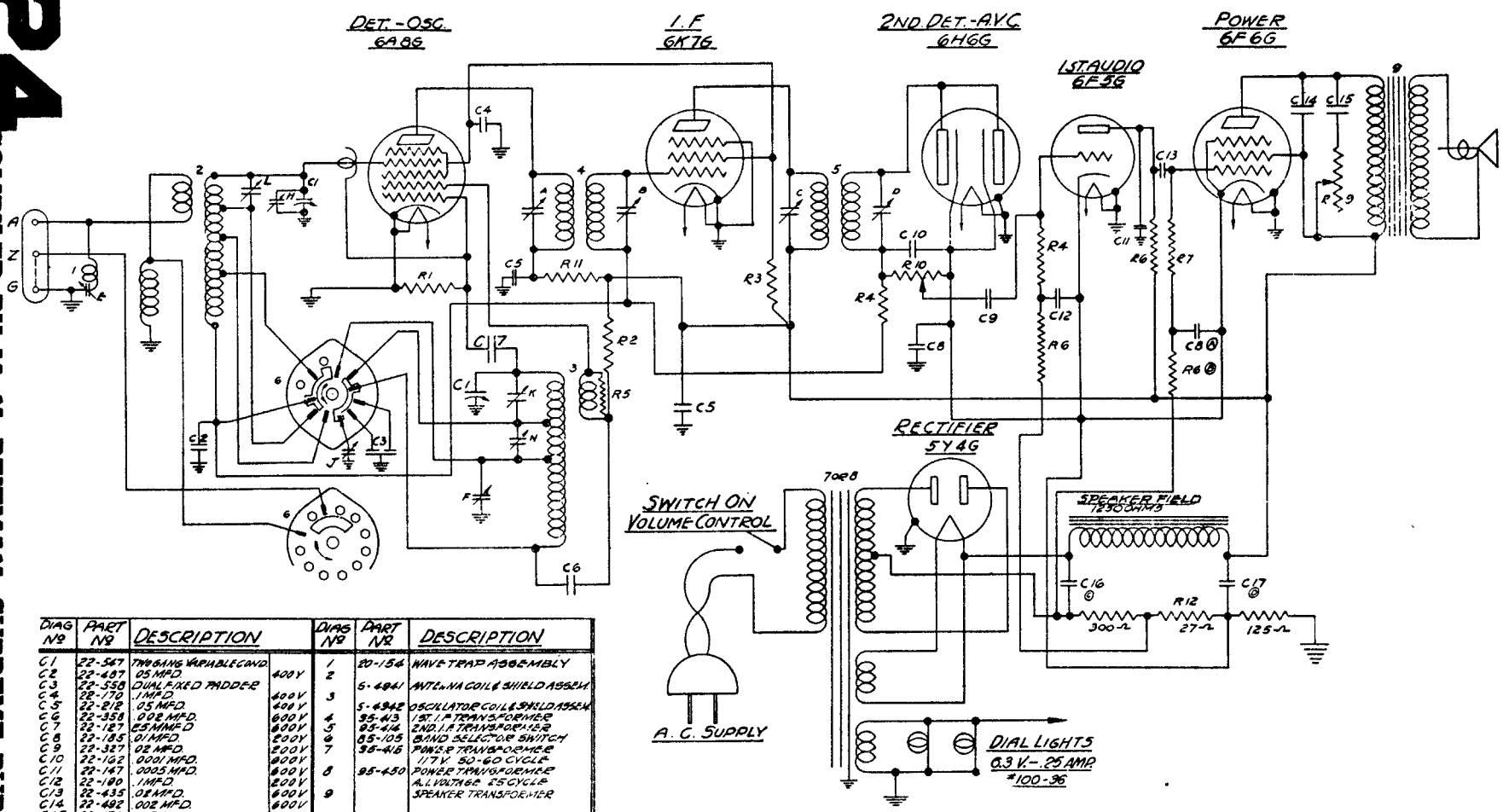

DIAG Nº	PART Nº	DESCRIPTION		DIAG Nº	PART Nº	DESCRIPTION
C1	22-567	TWO GANG VARIABLE COND.		1	20-154	WAVE TRAP ASSEMBLY
C2	22-487	.05 MFD.	400V	2		
C3	22-558	DUAL FIXED PADDER			5-4941	ANTENNA COIL & SHIELD ASSEM.
C4	22-170	.1 MFD.	400V	3		
C5	22-212	.05 MFD.	400V		5-4942	OSCILLATOR COIL & SHIELD ASSEM.
C6	22-358	.002 MFD.	600V	4	95-413	1ST I.F. TRANSFORMER
C7	22-127	25 MMFD	600V	5	95-414	2ND. I.F. TRANSFORMER
C8	22-185	.01 MFD.	600V	6	85-105	BAND SELECTOR SWITCH
C9	22-327	.02 MFD.	200V	7	95-416	POWER TRANSFORMER
C10	22-162	.0001 MFD.	400V			117 V. 50-60 CYCLE
C11	22-147	.0005 MFD.	600V	8	95-450	POWER TRANSFORMER
C12	22-180	.1 MFD.	200V			ALL VOLTAGE 25 CYCLE
C13	22-435	.02 MFD.	600V	9		SPEAKER TRANSFORMER
C14	22-492	.002 MFD.	600V			
C15	22-171	.05 MFD	600V			
C16	22-596	8 MFD. DRY ELECTROLYTIC	450V			
C17		16 MFD DRY ELECTROLYTIC	450V			VARIABLE TRIMMERS
R-1	63-593	47 M OHMS	¼W±20	A		1ST. I.F. TRANSF. PRIMARY
R-2	63-680	10 M OHMS	1W±20	B		1ST I.F. TRANSF. SECONDARY
R-3	63-677	33 M OHMS	1W±10	C		2ND. I.F. TRANSF. PRIMARY
R-4	63-271	1.5 MEG OHMS	¼W±20	D		2ND I.F. TRANSF. SECONDARY
R-5	63-537	4700 OHMS	¼W±20	E		WAVE TRAP
R-6	63-206	220 M OHMS	¼W±20	F		BROADCAST OSCILLATOR (SEE NOTE)
R-7	63-587	470 M OHMS	¼W±20	H		ANT. BROADCAST - ON GANG
				J	22-519	BROADCAST PADDER
R-9	63-521	50 M OHMS TONE CONTR.		K		SHORT WAVE OSCILLAT. (SEE NOTE)
R-10	63-520	400 M OHMS VOLUME CONT.		L	22-305	SHORT WAVE DETECTOR
R-11	63-605	1000 OHMS	½W±20	N		POLICE BAND OSCILLATOR (SEE NOTE)
R-12	63-613	3 SECTION CANDOHM				

I.F. FREQUENCY 456 K.C.
6 TUBE SUPERHETERODYNE - 3 BANDS
CHASSIS Nº 5638

ZENITH RADIO CORPORATION

Models 6-S-254, 6-S-256 (5644 Chassis)

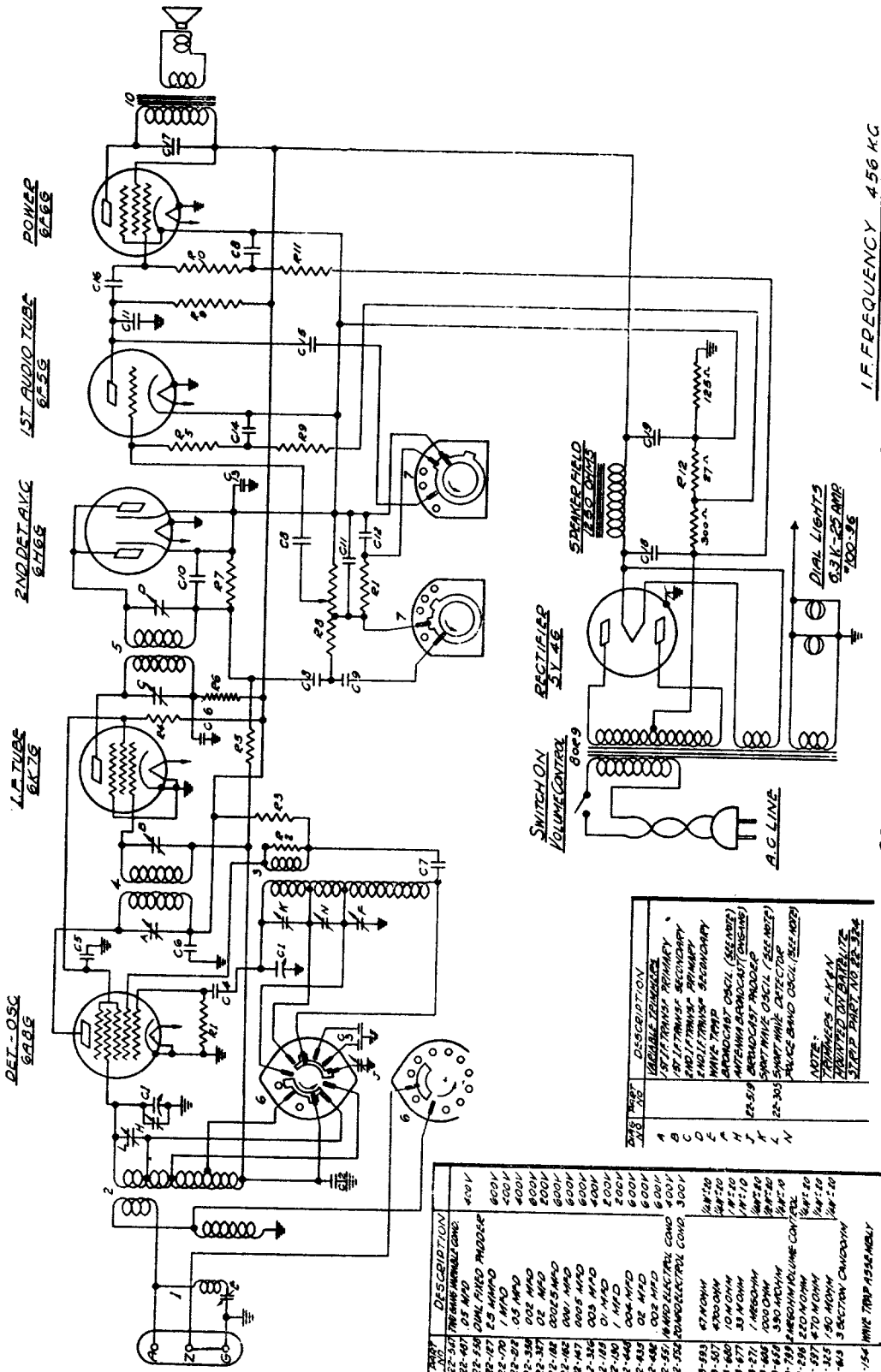

DATA NO.	PART NO.	DESCRIPTION	
C1	22-537	TRIMMER VARIABLE COND.	400 V
C2	22-407	.05 MFD	
C3	22-530	DUAL FIXED PHOTOFAC	600 V
C4	22-127	2.5 MMFD	400 V
C5	22-170	1 MFD	400 V
C6	22-212	.05 MFD	400 V
C7	22-308	.002 MFD	600 V
C8	22-307	.02 MFD	200 V
C9	22-182	.0002-5 MFD	600 V
C10	22-162	.001 MFD	600 V
C11	22-147	.0005 MFD	600 V
C12	22-336	.005 MFD	400 V
C13	22-188	.01 MFD	200 V
C14	22-180	.1 MFD	200 V
C15	22-446	.004 MFD	600 V
C16	22-435	.02 MFD	600 V
C17	22-406	.002 MFD	600 V
C18	22-551	16 MFD ELECTROL COND	400 V
C19	22-552	20 MFD ELECTROL COND.	300 V
R-1	63-533	47 K OHM	½W ±10
R-2	63-507	4700 OHM	½W ±10
R-3	63-680	10 K OHM	1W ±10
R-4	63-677	33 K OHM	1W ±10
R-5	63-271	1 MEGOHM	½W ±10
R-6	63-660	1000 OHM	½W ±10
R-7	63-655	330 K OHM	½W ±10
R-8	63-793	2 MEGOHM VOLUME CONTROL	
R-9	63-296	220 K OHM	½W ±10
R-10	63-597	470 K OHM	½W ±10
R-11	63-325	150 K OHM	½W ±10
R-12	63-643	3 SECTION CAN OHM	
1	20-154	WIRE TRAP 455 KC NEWLY	
2	1-5073	ANT. COIL & SHIELD 455 KC	
3	1-5076	OSC. COIL & SHIELD 455 KC	
4	95-416	1ST I.F. TRANSFORMER	
5	95-417	2ND I.F. TRANSFORMER	
6	65-113	BAND SELECTOR SWITCH	
7	65-100	VOLUME CONTROL SWITCH	
8	95-404	POWER TRANSFORMER 117V 50-60 CYCLE	
9	95-424	SPEAKER FIELD 2500 OHMS	
10		SPEAKER TRANSFORMER	

DATA NO.	PART NO.	DESCRIPTION
		VARIABLE TRANSFORMERS
A		1ST I.F. TRANS. PRIMARY
B		1ST I.F. TRANS. SECONDARY
C		2ND I.F. TRANS. PRIMARY
D		2ND I.F. TRANS. SECONDARY
E		WAVE TRAP
F		BROADCAST OSCIL. (SEE NOTE)
G	22-518	ANTENNA BROADCAST (ONE GANG)
H		BROADCAST PHOTOFAC
J		SHORT WAVE OSCIL. (SEE NOTE)
K	22-305	SHORT WAVE DETECTOR
L		POLICE BAND OSCIL. (SEE NOTE)
N		

NOTE:
TRIMMERS F-K & N
MOUNTED ON BATTERY
STRIP PART NO. 22-324

ZENITH

3 BAND { 550 KC. - 1780 KC. / 2100 KC. - 6800 KC. / 7000 KC. - 23000 KC. }

I.F. FREQUENCY 456 KC.
6 TUBE BATTERY SUPERHETERODYNE
CHASSIS Nº 5621

MODELS - 6V27, 6V62

ZENITH RADIO CORP.

DIAG. No.	PART NUMBER	DESCRIPTION		
R1	63-278	9.9 M	OHMS	1/4 W.
R2	63-361	5 M	"	1/4 W.
R3	63-362	400	"	1/4 W.
R4	63-280	49 M	"	1/4 W.
R5	63-353	19 M	"	1/2 W.
R6	63-293	990 M	"	1/4 W.
R7	63-290	260 M	"	1/4 W.
R8	63-258	490 M	"	1/4 W.
R9	63-272	4 M	"	1/4 W.
R10	63-238	1 M	"	1/4 W.
R11	63-260	100 M	"	1/4 W.
R12	63-477	100	FLEXIBLE WIRE WOUND,	
R13	63-394	200	OHMS	1/2 W.
R14	63-456	200 M	VOL. CONTROL & SWITCH	
R15	63-458	50 M	TONE CONTROL	
C1	22-243	.01	MFD.	400 V.
C2	22-410	.003	"	600 V.
C3	22-250	.05	"	200 V.
C4	22-289	50	MMFD.	600 V.
C5	22-188	.02	MFD.	400 V.
C6	22-411	.0023	"	600 V.
C7	22-345	.0011	"	600 V.
C8	22-209	200-350	MMFD. PADDER	

DIAG. No.	PART NUMBER	DESCRIPTION		
C9	22-408	2-35	MMFD. PADDER	
C10	22-82	.001	MFD.	600 V.
C11	22-212	.05	"	400 V.
C12	22-182	.00025	"	600 V.
C13	22-224	.1	"	300 V.
C14	22-225	.5	"	25 V.
C15	22-437	.01	"	1400 V.
C16	22-228	.5	"	300 V.
C17	22-251	.5	"	200 V.
C18	22-432	8	"	250 V
C19		2	"	
C20	22-409	456	MMF. VAR. COND.	
1	5-3697	ANT. COIL ASSEM.		
2	5-3698	DET. COIL ASSEM.		
3	5-3699	OSC. COIL ASSEM.		
4	20-82	ANT. CHOKE		
5	20-88	R.F. CHOKE		
6	20-119	R.F. PLATE CHOKE		
7	5-2778	R.F. CHOKE		
8	85-78	BAND SELECTOR SWITCH		
9	95-291	1ST. I.F. TRANS.		
10	95-292	2ND. I.F. TRANS.		
11	95-298	POWER CHOKE		
12	95-305	RECTIFIER TRANS.		
13	95-311	AUDIO TRANS.		
14	49-132	8" MAG. SPEAKER MOD. 6V27		
15	49-134	12" DYN. " " MOD. 6V62		

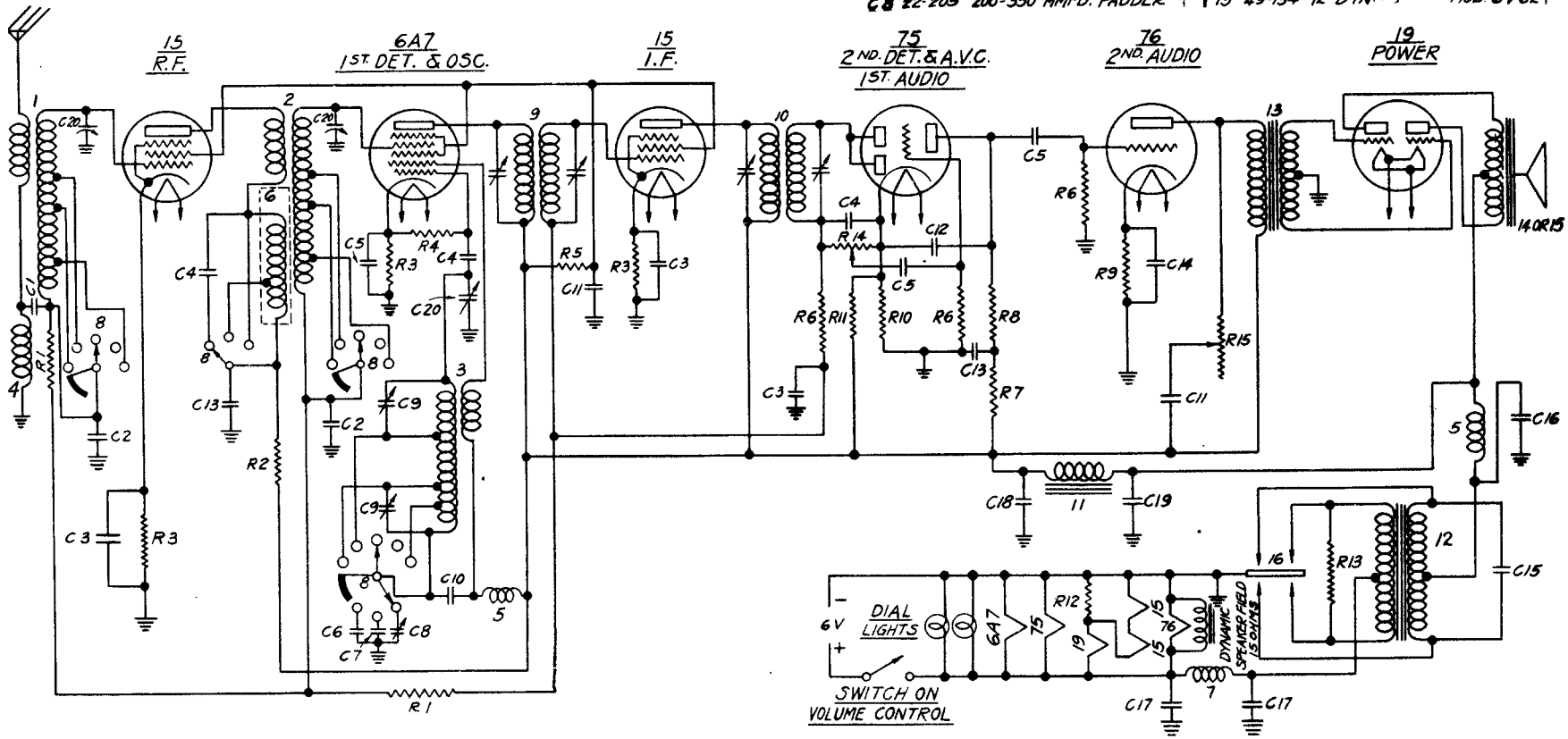

COMPILED BY M. N. BETMAN, SUPREME PUBLICATIONS

CIRCUIT DIAGRAM—Models 7-D-119, 7-D-126, 7-D-127, 7-D-138, 7-D-151, 7-D-148, 7-D-162, 7-D-168. (Chassis No. 5707)

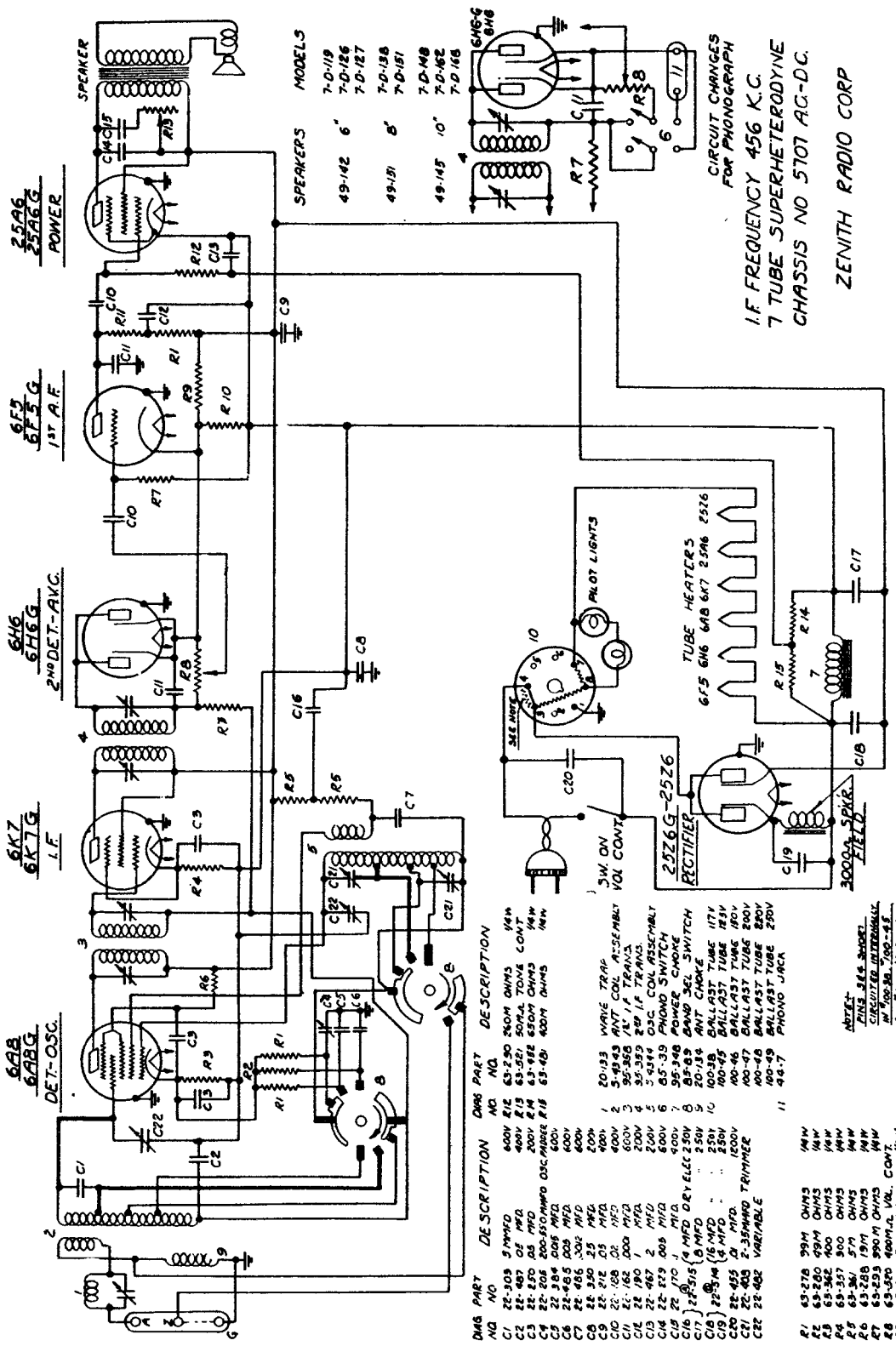

Models 7-S-204, 7-S-232, 7-S-240, 7-S-242, 7-S-258, 7-S-260, 7-S-261 (5709 Chassis)

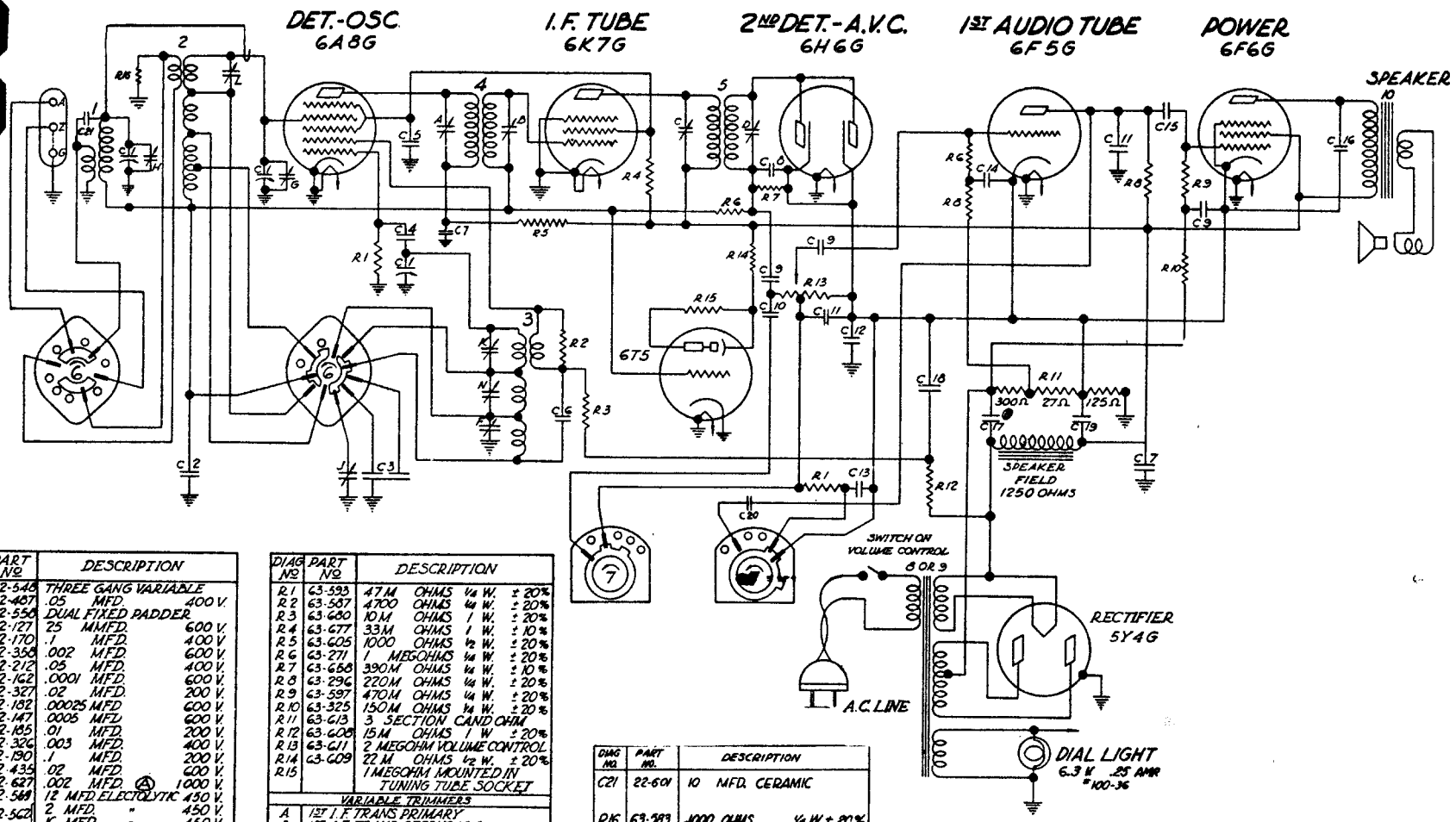

DIAG Nº	PART Nº	DESCRIPTION
C1	22-548	THREE GANG VARIABLE
C2	22-467	.05 MFD. 400 V.
C3	22-550	DUAL FIXED PADDER
C4	22-127	25 MMFD. 600 V.
C5	22-170	.1 MFD. 400 V.
C6	22-358	.002 MFD. 600 V.
C7	22-212	.05 MFD. 400 V.
C8	22-162	.0001 MFD. 600 V.
C9	22-327	.02 MFD. 200 V.
C10	22-182	.00025 MFD. 600 V.
C11	22-147	.0005 MFD. 600 V.
C12	22-185	.01 MFD. 200 V.
C13	22-326	.003 MFD. 400 V.
C14	22-190	.1 MFD. 200 V.
C15	22-435	.02 MFD. 600 V.
C16	22-627	.002 MFD. Ⓐ 1000 V.
C17	22-569	12 MFD. ELECTOLYTIC 450 V.
C18	22-562	2 MFD. " 450 V.
C19		16 MFD. " 450 V.
C20	22-448	.004 MFD. 600 V.
1	3-4780	ANTENNA COIL ASSEMBLY
2	3-5054	DETECTOR COIL & SHIELD ASSEM.
3	3-4969	OSCILLATOR COIL & SHIELD ASSEM.
4	95-416	1ST I.F. TRANS.
5	95-417	2ND I.F. TRANS.
6	85-110	BAND SELECTOR SWITCH
7	85-108	TONE CONTROL SWITCH
8	95-418	POWER TRANS.-117V. 50-60 CYCLE
9	95-451	POWER TRANS.-ALL VOLTAGE 25 CYCLE
10		SPEAKER TRANSFORMER

DIAG Nº	PART Nº	DESCRIPTION
R1	63-593	47M OHMS 1/4 W. ± 20%
R2	63-587	4700 OHMS 1/4 W. ± 20%
R3	63-680	10M OHMS 1 W. ± 20%
R4	63-677	33M OHMS 1 W. ± 10%
R5	63-605	1000 OHMS 1/2 W. ± 20%
R6	63-271	1 MEGOHMS 1/4 W. ± 20%
R7	63-668	390M OHMS 1/4 W. ± 10%
R8	63-296	220M OHMS 1/4 W. ± 20%
R9	63-597	470M OHMS 1/4 W. ± 20%
R10	63-325	150M OHMS 1/4 W. ± 20%
R11	63-613	3 SECTION CAND OHM
R12	63-608	15M OHMS 1 W ± 20%
R13	63-611	2 MEGOHM VOLUME CONTROL
R14	63-609	22M OHMS 1/2 W. ± 20%
R15		1 MEGOHM MOUNTED IN TUNING TUBE SOCKET

VARIABLE TRIMMERS	
A	1ST I.F. TRANS PRIMARY
B	1ST I.F. TRANS SECONDARY
C	2ND I.F. TRANS PRIMARY
D	2ND I.F. TRANS SECONDARY
F	BROADCAST OSCILLATOR (SEE NOTE)
G	DETECTOR BROADCAST (ON GANG)
H	ANTENNA BROADCAST (ON GANG)
J	#22-519 BROADCAST PADDER
K	SHORT WAVE OSCILLATOR (SEE NOTE)
L	SHORT WAVE DETECTOR (SEE NOTE)
N	POLICE BAND OSCILLATOR (SEE NOTE)

NOTE:- TRIMMERS F, K, L, & N MOUNTED ON BAKELITE STRIP #22-549

DIAG NO.	PART NO.	DESCRIPTION
C21	22-601	10 MFD. CERAMIC
R16	63-583	1000 OHMS 1/4 W ± 20%

SPEAKERS		MODELS
49-203	8"	7-S-232
49-206	8"	7-S-240
49-206	8"	7-S-242
49-181	10"	7-S-258
49-195	12"	7-S-260
49-195	12"	7-S-261

I.F.-FREQUENCY 456 K.C.
7 TUBE SUPERHETERODYNE
3 BAND
CHASSIS Nº 5709

ZENITH RADIO CORP.

Models 7-J-232, 7-J-259 (5711 Chassis)

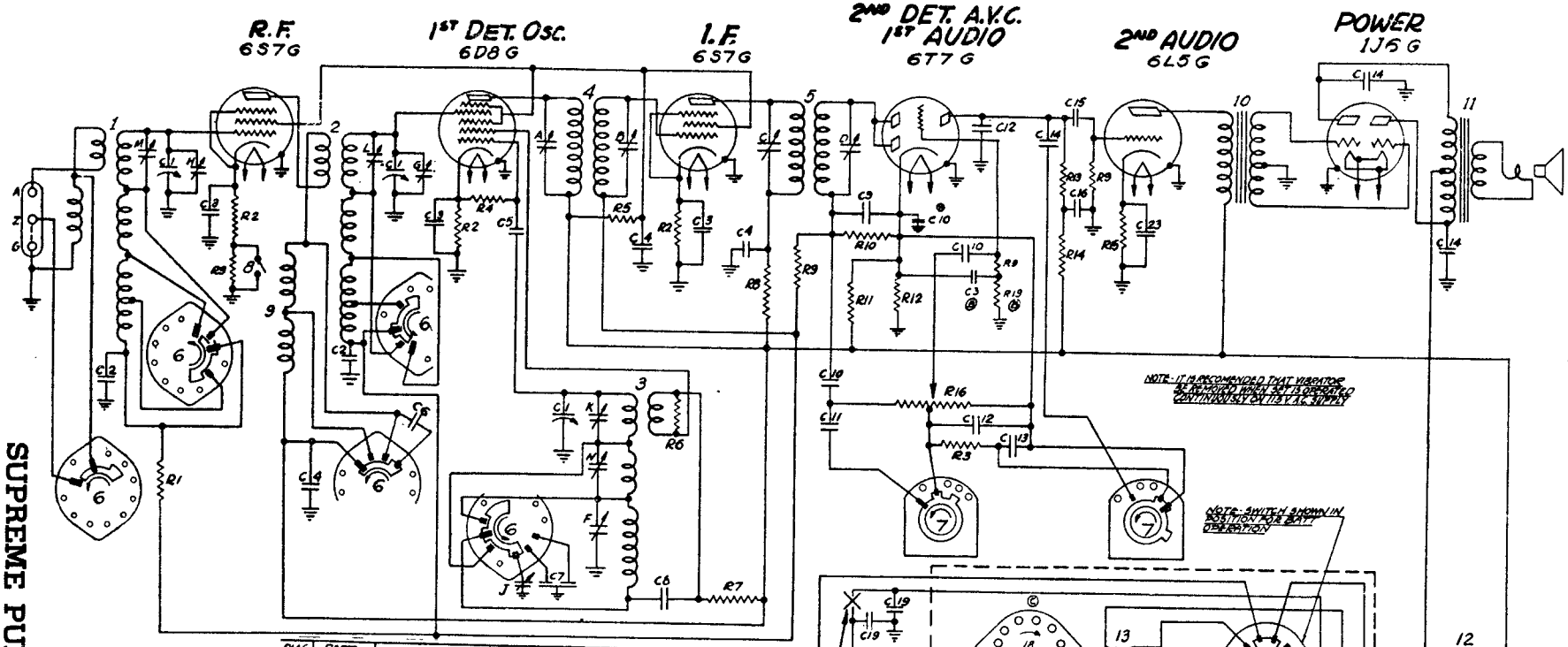

DIAG. NO.	PART NO.	DESCRIPTION
11		SPEAKER TRANS. (ON SPEAKER)
12	95-298	POWER CHOKE
13	95-425	POWER TRANSFORMER
14	S-2778	R.F. CHOKE ASSEMBLY
15	S-5043	R.F. CHOKE ASSEMBLY
16	20-82	R.F. CHOKE
17	190-11	VIBRATOR
18	86-125	POWER SWITCH

DIAG. NO.	PART NO.	DESCRIPTION	
C1	22 348	THREE GANG VARIABLE	
C2	22 497	.05 MFD.	400 V.
C3	22 250	.05 MFD.	200 V.
C4	22 212	.05 MFD.	400 V.
C5	22 289	50 MMFD.	600 V.
C6	22 127	25 MMFD.	600 V.
C7	22 558	DUAL FIXED PADDER	
C8	22 358	.002 MFD.	600 V.
C9	22 162	.0001 MFD.	600 V.
C10	22 327	.02 MFD.	200 V.
C11	22 182	.00025 MFD.	600 V.
C12	22 147	.0005 MFD.	600 V.
C13	22 229	.005 MFD.	600 V.
C14	22 492	.002 MFD.	600 V.
C15	22 188	.02 MFD.	400 V.
C16	22 170	.1 MFD.	400 V.
C17	22 350	.25 MFD.	200 V.
C18	22 199	.5 MFD.	200 V.
C19	22 435	.02 MFD.	600 V.
C20	22 574	.02 MFD.	600 V.
C21		8 MFD. ELECTROLYTIC	250
C22	22 577	8 MFD. "	250 V.
C23		10 MFD. "	25 V.
R1	63 595	100 M OHM	1/4 W ± 20
R2	63 632	560 OHM	1/4 W ± 10
R3	63 593	47 M OHM	1/4 W ± 20

DIAG. NO.	PART NO.	DESCRIPTION	
R4	63-648	47 M OHM	1/4 W ± 10
R5	63-678	47 M OHM	1/2 W ± 10
R6	63-589	10 M OHM	1/4 W ± 20
R7	63-796	10 M OHM	1/2 W ± 10
R8	63-605	1000 OHM	1/2 W ± 20
R9	63-271	1 MEGOHM	1/4 W ± 20
R10	63-658	390 M OHM	1/4 W ± 10
R11	63-160	100 M OHM	1/2 W ± 10
R12	63-634	820 OHM	1/4 W ± 10
R13	63-597	470 M OHM	1/4 W ± 20
R14	63-656	270 M OHM	1/4 W ± 10
R15	63 797	2200 OHM	1/2 W ± 10
R16	63 568	2 MEGOHM VOLUME CONTROL	
R17	63 577	100 OHM	1/4 W ± 20
R18	63 801	21 OHM (WIREWOUND)	1/2 W ± 5
R19	63 596	330 M OHM	1/4 W ± 20
1	S-5017	ANT. COIL & SHIELD ASSEM.	
2	S-5018	DET. COIL & SHIELD ASSEM.	
3	S-5163	OSC. COIL & SHIELD ASSEM.	
4	95-416	1ST. I.F. TRANSFORMER	
5	95-417	2ND I.F. TRANSFORMER	
6	85-103	BAND SELECTOR SWITCH	
7	85-108	TONE CONTROL SWITCH	
8	85-117	SENSITIVITY SWITCH	
9	20-195	R.F. CHOKE	
10	95-446	AUDIO TRANSFORMER	

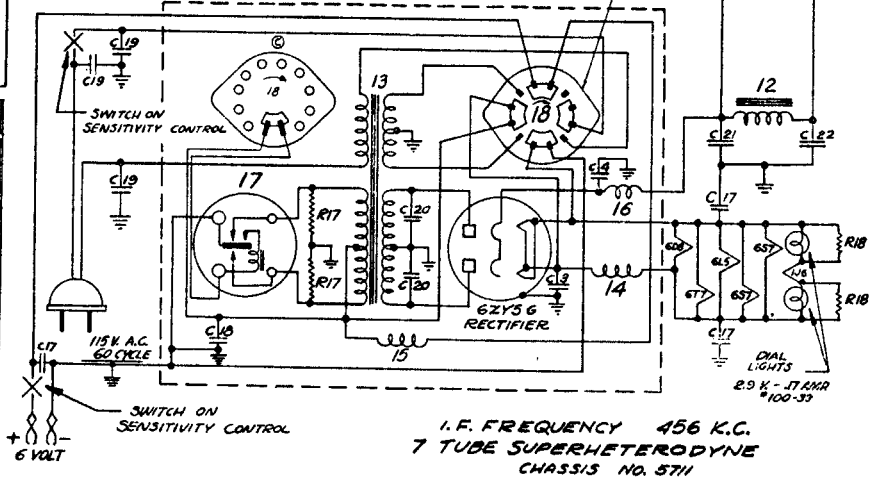

I.F. FREQUENCY 456 K.C.
7 TUBE SUPERHETERODYNE
CHASSIS NO. 5711
6 VOLT D.C. — 115 VOLT A.C.

ZENITH RADIO CORPORATION

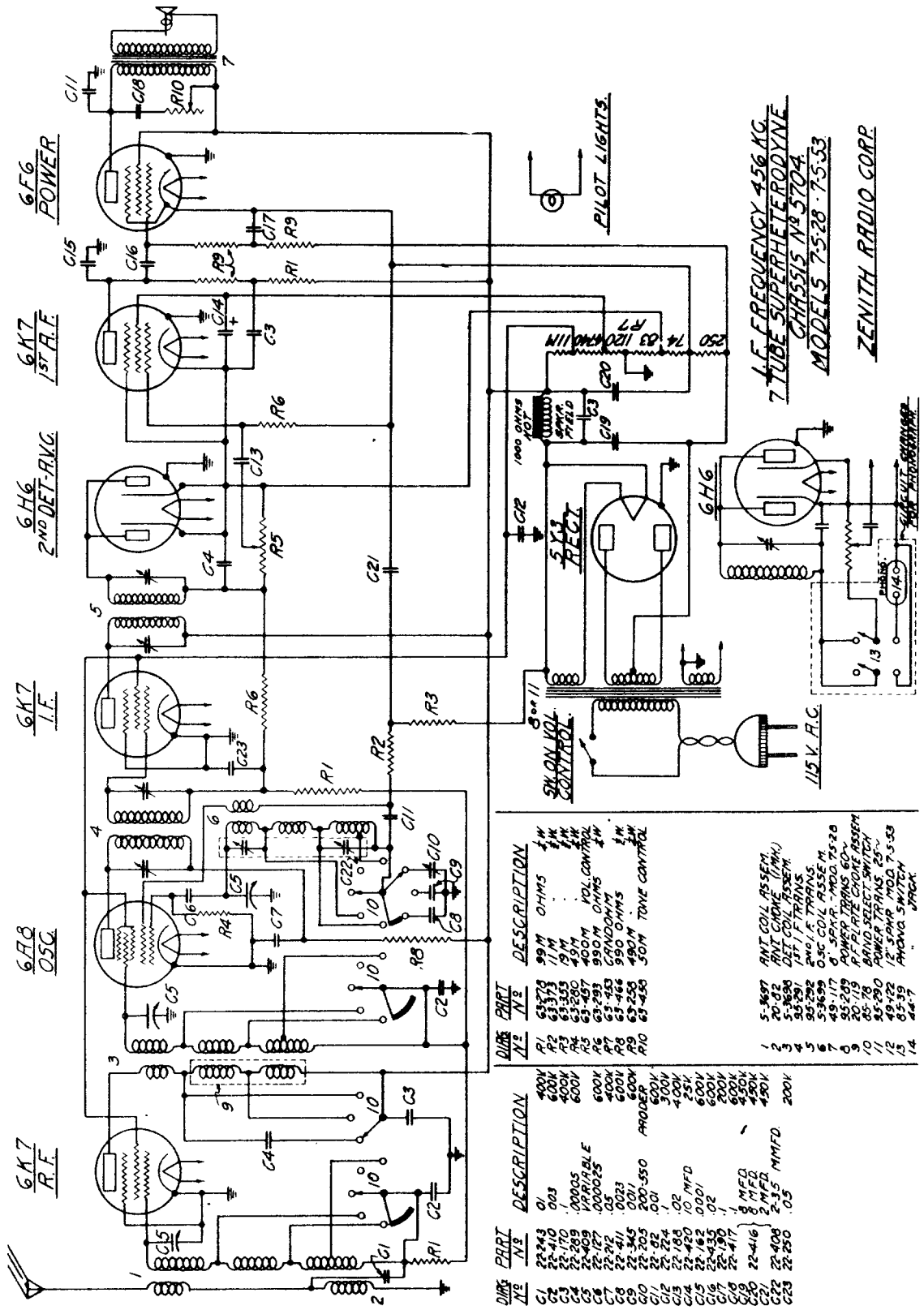

DWG. Nº	PART Nº	DESCRIPTION	
C1	22-243	.01	400V
C2	22-410	.003	600V
C3	22-170	.01	400V
C4	22-289	.00005	600V
C5	22-127	VARIABLE	
C6	22-127	.000025	600V
C7	22-212	.05	400V
C8	22-411	.0021	600V
C9	22-343	.0011	600V
C10	22-205	200-550	PADDER
C11	22-212	.01	600V
C12	22-224	.1	300V
C13	22-188	.02	400V
C14	22-420	.01 MFD	25V
C15	22-162	.0001	600V
C16	22-135	.02	600V
C17	22-130	.1	600V
C18	22-417	1	450V
C19	22-416	8 MFD.	450V
C20		8 MFD.	450V
C21		2-3.5 MMFD.	
C22	22-408	.05	200V
C23	22-250		

DWG. Nº	PART Nº	DESCRIPTION	
R1	63-373	99 M	1 W
R2	63-373	1 M	1 W
R3	63-353	99 M	1 W
R4	63-280	490 M	1 W
R5	63-293	990 M OHMS	VOL. CONTROL
R6	63-443	990 M OHMS	1 W
R7	63-446	990 OHMS	1 W
R8	63-228	490 M	TONE CONTROL
R9	63-458	50 M	
R10			

DWG. Nº	PART Nº	DESCRIPTION
1	5-3697	ANT. COIL ASSEM.
2	20-112	ANT. CHOKE (1 MH.)
3	5-3696	DET. COIL ASSEM.
4	95-291	1ST I.F. TRANS.
5	95-292	2ND I.F. TRANS.
6	5-3699	OSC. COIL ASSEM.
7	49-117	6" SPKR. - MOD. 7-5-28
9	95-249	POWER TRANS. 60~
10	20-119	P.F.B. PIPE CHOKE ASSEM.
11	65-78	BAND SELECT. SWITCH
12	95-290	POWER TRANS. 25~
13	49-122	12" SPKR. MOD. 7-5-33
14	65-39	PHONO. SWITCH
	44-7	JACK

COMPILED BY M. N. BEITMAN, SUPREME PUBLICATIONS

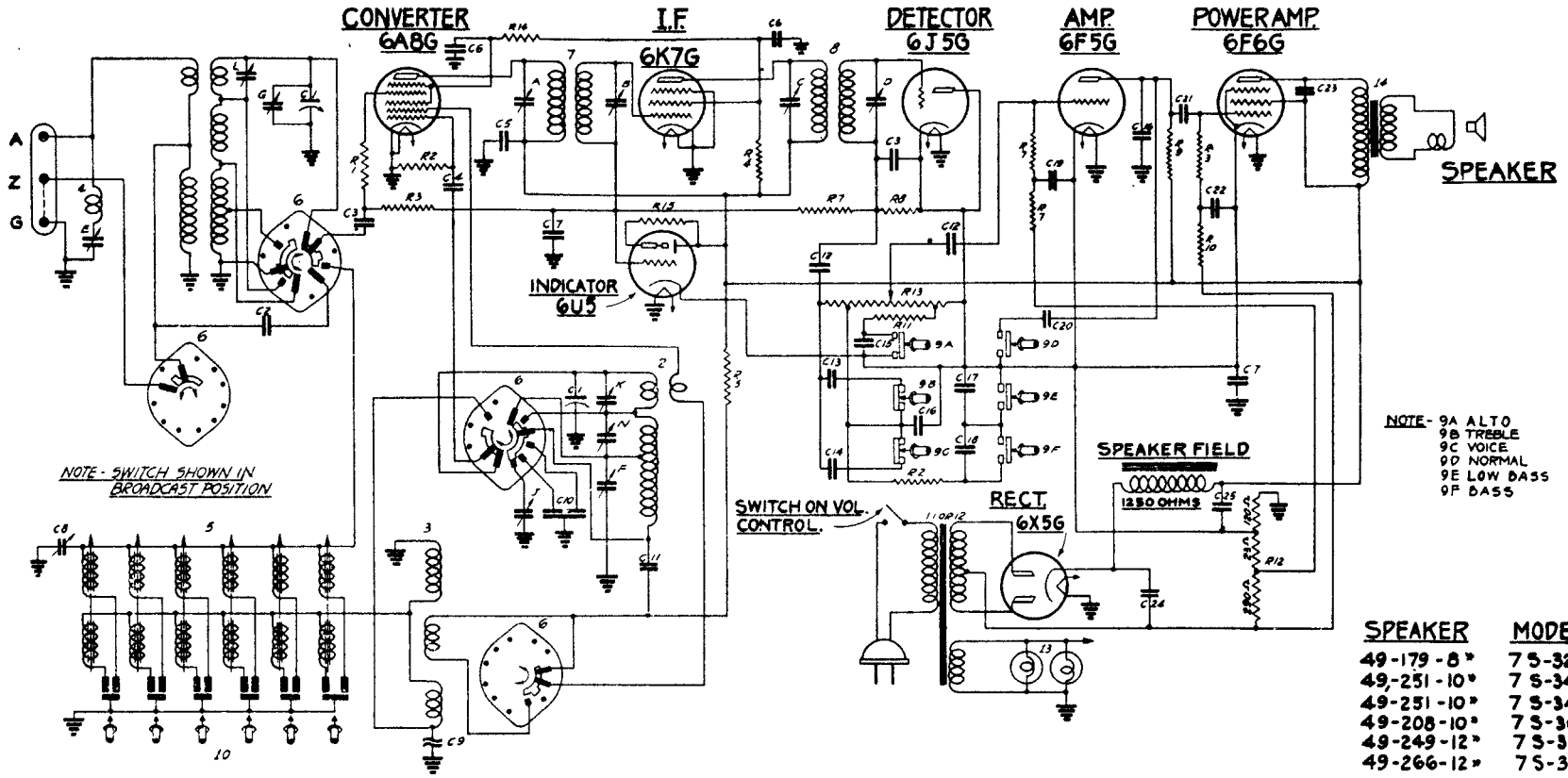

SPEAKER	MODEL
49-179-8"	7S-323
49-251-10"	7S-342
49-251-10"	7S-343
49-208-10"	7S-363
49-249-12"	7S-366
49-266-12"	7S-364

DIAG NO	PART NO	DESCRIPTION	
C-1	22-717	TWO BAND VAR COND.	
C-2	22-289	50 MMFD	600V
C-3	22-162	.0001 MFD	600V
C-4	22-127	25 MMFD	600V
C-5	22-170	.1 MFD	600V
C-6	22-212	.05 MFD	600V
C-7	22-250	.05 MFD	200V
C-8	22-519	TRIMMER COND	
C-9	22-760	COMPENSATING COND	
C-10	22-708	DUAL FIXED PADDER	
C-11	22-358	.002 MFD	600V
C-12	22-327	.02 MFD	200V
C-13	22-182	.00025 MFD	600V
C-14	22-470	.00015 MFD	600V
C-15	22-185	.01 MFD	200V
C-16	22-147	.0005 MFD	600V
C-17	22-458	.006 MFD	600V
C-18	22-326	.003 MFD	600V
C-19	22-190	.1 MFD	200V
C-20	22-444	.006 MFD.	600V

DIAG NO	PART NO	DESCRIPTION	
C-21	22-455	08 MFD	600V
C-22	22-218	03 MFD	200V
C-23	22-482	.002 MFD	600V
C-24	22-718	.12 MFD ELECTROLYTIC	450V
C-25	22-719	.16 MFD ELECTROLYTIC	350V
R-1	63-621	39 OHM	1/2 W
R-2	63-582	33 M OHM	1/2 W
R-3	63-597	470 M OHM	1/2 W
R-4	63-861	47 M OHM	1 W
R-5	63-680	10 M OHM	1 W
R-7	63-271	1 MEGOHM	1/2 W
R-8	63-655	220 M OHM	1/2 W
R-9	61-296	220 M OHM	1/2 W
R-10	63-585	100 M OHM	1/2 W
R-11	63-591	22 M OHM	1/2 W
R-12	63-984	3 SECTION CAN 20 OHM	

DIAG NO	PART NO	DESCRIPTION	
R-13	63-985	VOLUME CONTROL	
R-14	63-863	18 M OHM	1/4 W
R-15		1 MEGOHM MOUNTED IN TUNING TUBE BASE	
1	S-6284	ANTENNA COIL & SHIELD ASSEM	
2			
3	S-6285	OSC COIL & SHIELD ASSEM	
4	20-196	COMPENSATING COIL	
5	70-166	WAVE TRAP	
6	85-151	BAND SELECTOR SWITCH	
7	95-536	1ST I.F. TRANSFORMER	
8	95-537	2ND I.F. TRANSFORMER	
9	S-6224	TONE CONTROL SW ASSEM.	
10	85-152	AUTOMATIC TUNING SWITCH	
11	95-526	POWER TRANS-117V-50-60 ~	
12	95-539	POWER TRANS ALL VOLTAGE 25 ~	
13	100-56	PILOT LIGHT .25A - 6.3V	
14		SPEAKER TRANS.	

DIAG NO	PART NO	DESCRIPTION
A		1ST I.F. TRANS PRI
B		1ST I.F. TRANS SEC
C		2ND I.F. TRANS. PRI
D		2ND I.F. TRANS. SEC
E		WAVE TRAP
F		BROADCAST OSC (SEE NOTE)
G		ANTENNA BROADCAST (1st GANG)
T	22-463	BROADCAST PADDER
K		SHORT WAVE OSC (SEE NOTE)
L	22-305	SHORT WAVE DETECTOR
N		POLICE BAND OSC (SEE NOTE)

NOTE - TRIMMERS "F-K & N" MOUNTED ON BAKELITE STRIP - PART NO 22-326

Chassis No. 5714

I.F. FREQUENCY 455 K.C.
7 TUBE SUPERHETERODYNE
CHASSIS Nº 5714-A.C. 3-BAND
ZENITH RADIO CORPORATION

Models 8-S-129, 8-S-15-. (Chassis No. 5801)

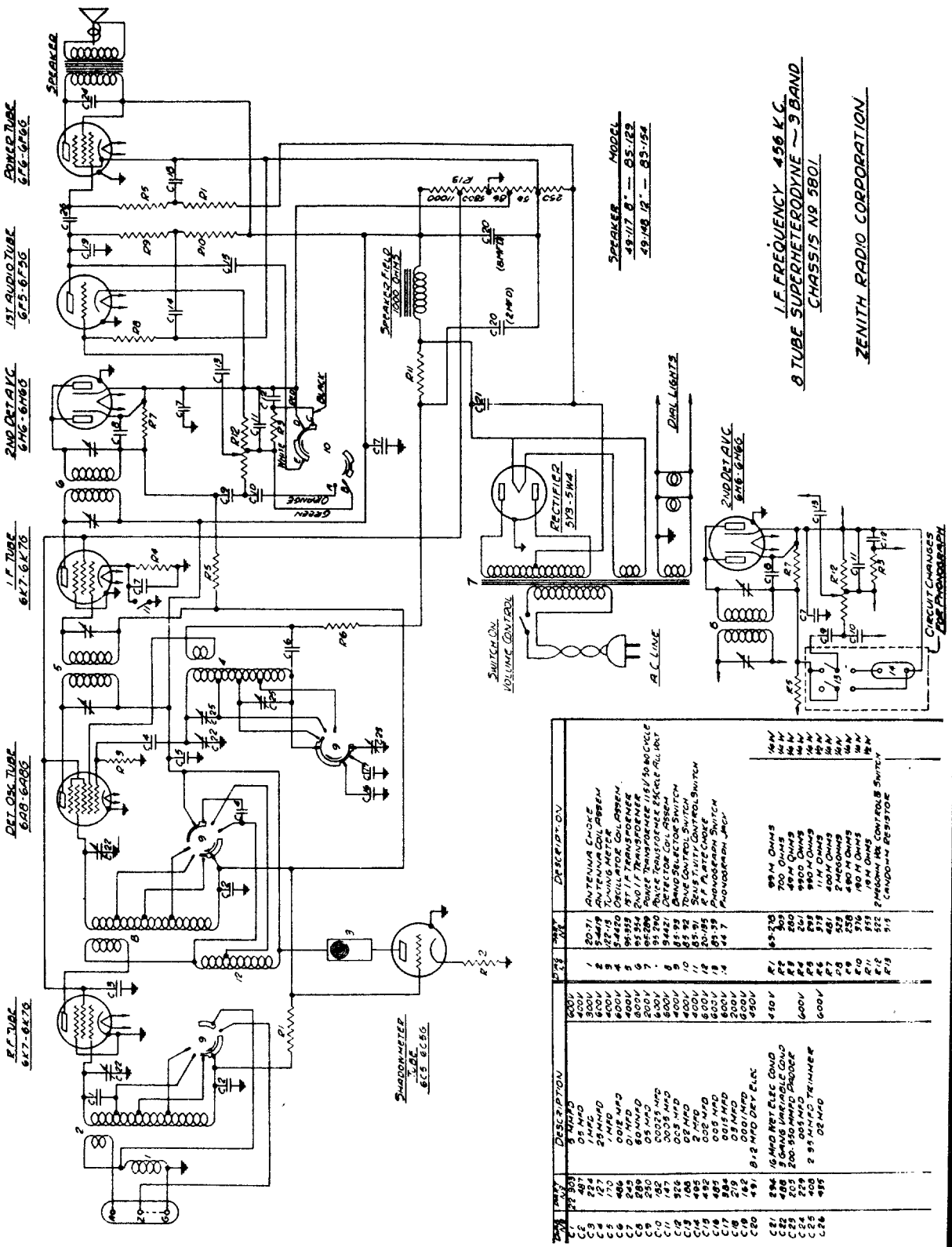

MANUAL OF MOST-OFTEN-NEEDED RADIO DIAGRAMS

COMPILED BY M. N. BEITMAN, SUPREME PUBLICATIONS

233

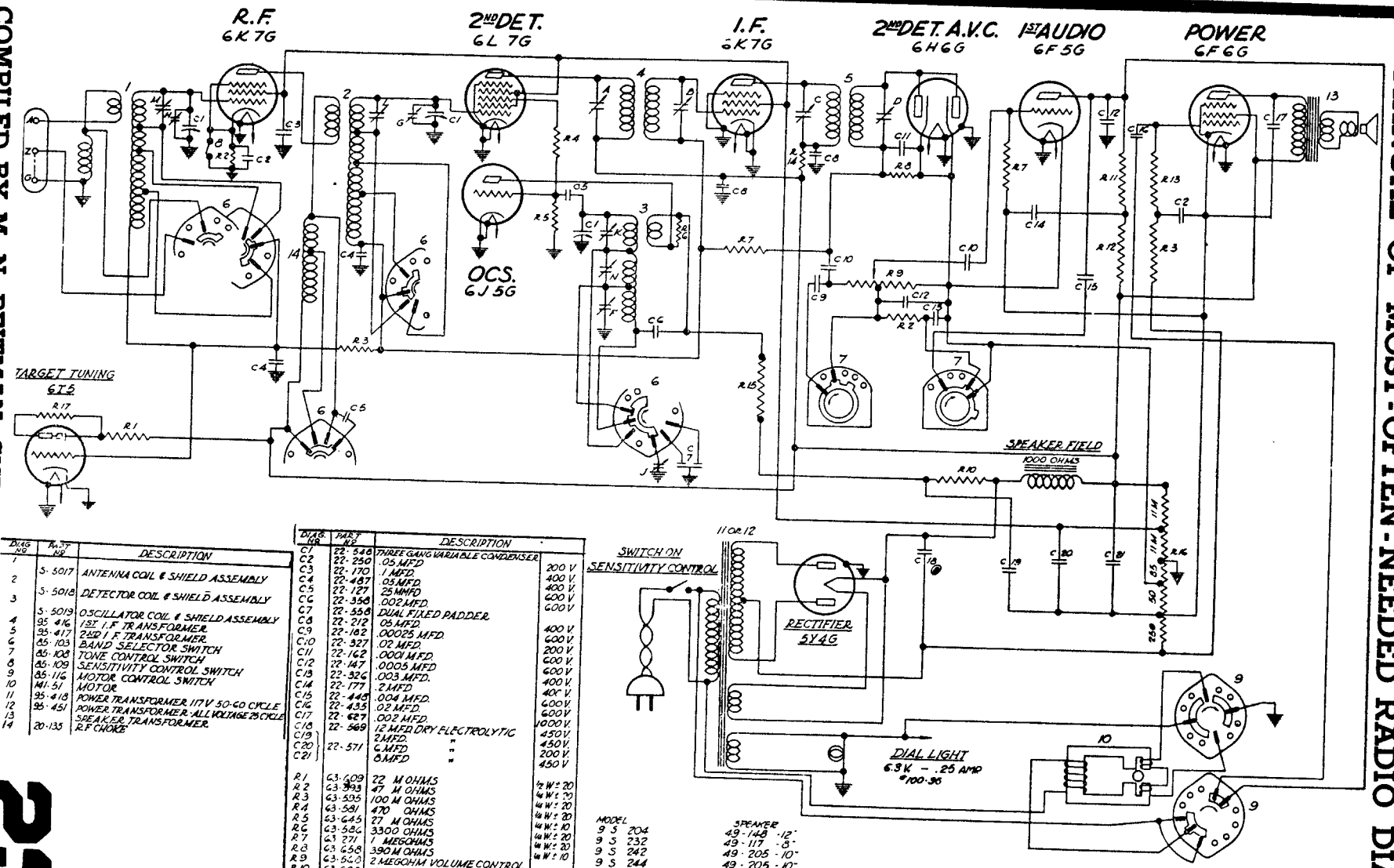

DIAG. NO	PART NO	DESCRIPTION
1	5-5017	ANTENNA COIL & SHIELD ASSEMBLY
2	5-5018	DETECTOR COIL & SHIELD ASSEMBLY
3	5-5019	OSCILLATOR COIL & SHIELD ASSEMBLY
4	95-416	1ST I.F. TRANSFORMER
5	95-417	2ND I.F. TRANSFORMER
6	85-103	BAND SELECTOR SWITCH
7	85-108	TONE CONTROL SWITCH
8	85-109	SENSITIVITY CONTROL SWITCH
9	85-116	MOTOR CONTROL SWITCH
10	M1-51	MOTOR
11	95-418	POWER TRANSFORMER 117V 50-60 CYCLE
12	95-451	POWER TRANSFORMER: ALL VOLTAGE 25 CYCLE
13		SPEAKER TRANSFORMER
14	20-135	R.F CHOKE

DIAG. NO	PART NO	DESCRIPTION	
C1	22-548	THREE GANG VARIABLE CONDENSER	
C2	22-250	.05 MFD	200 V.
C3	22-170	.1 MFD	400 V.
C4	22-487	.05 MFD	400 V.
C5	22-127	25 MMFD	600 V.
C6	22-358	.002 MFD	600 V
C7	22-558	DUAL FIXED PADDER	
C8	22-212	.05 MFD	400 V.
C9	22-182	.00025 MFD	600 V.
C10	22-327	.02 MFD	200 V.
C11	22-162	.0001 MFD	600 V.
C12	22-147	.0005 MFD	600 V.
C13	22-326	.003 MFD	400 V.
C14	22-177	.2 MFD	400 V.
C15	22-446	.004 MFD	600 V.
C16	22-435	.02 MFD	600 V.
C17	22-627	.002 MFD	1000 V.
C18	22-569	12 MFD DRY ELECTROLYTIC	450 V.
C19	22-571	2 MFD " "	450 V.
C20		6 MFD " "	200 V.
C21		8 MFD " "	450 V
R1	63-609	22 M OHMS	1/2 W ± 20
R2	63-393	47 M OHMS	1/4 W ± 20
R3	63-595	100 M OHMS	1/4 W ± 20
R4	63-581	470 OHMS	1/4 W ± 20
R5	63-645	27 M OHMS	1/4 W ± 10
R6	63-586	3300 OHMS	1/4 W ± 20
R7	63-271	1 MEGOHMS	1/4 W ± 20
R8	63-658	390 M OHMS	1/4 W ± 10
R9	63-560	2 MEGOHM VOLUME CONTROL	
R10	63-608	15 M OHMS	1 W ± 20
R11	63-296	220 M OHMS	1/4 W ± 20
R12	63-654	180 M OHMS	1/4 W ± 10
R13	63-597	470 M OHMS	1/4 W ± 20
R14	63-605	1000 OHMS	1/2 W ± 20
R15	63-680	10 M OHMS	1 W ± 20
R16	63-570	5 SECTION CAHDOHM	
R17		1 MEGOHM MOUNTED IN TUNING TUBE SOCKET	

MODEL	SPEAKER
9 S 204	49-148 -12"
9 S 232	49-117 -8"
9 S 242	49-205 -10"
9 S 244	49-205 -10"
9 S 262	49-148 -12"
9 S 263	49-148 -12"
9 S 264	49-148 -12"

I.F.-FREQUENCY 456 K.C.
9 TUBE SUPERHETERODYNE
3 BAND
CHASSIS № 5905

Models 9-S-203, 9-S-232, 9-S-242, 9-S-244, 9-S-262, 9-S-263, 9-S-264 (5905 Chassis)

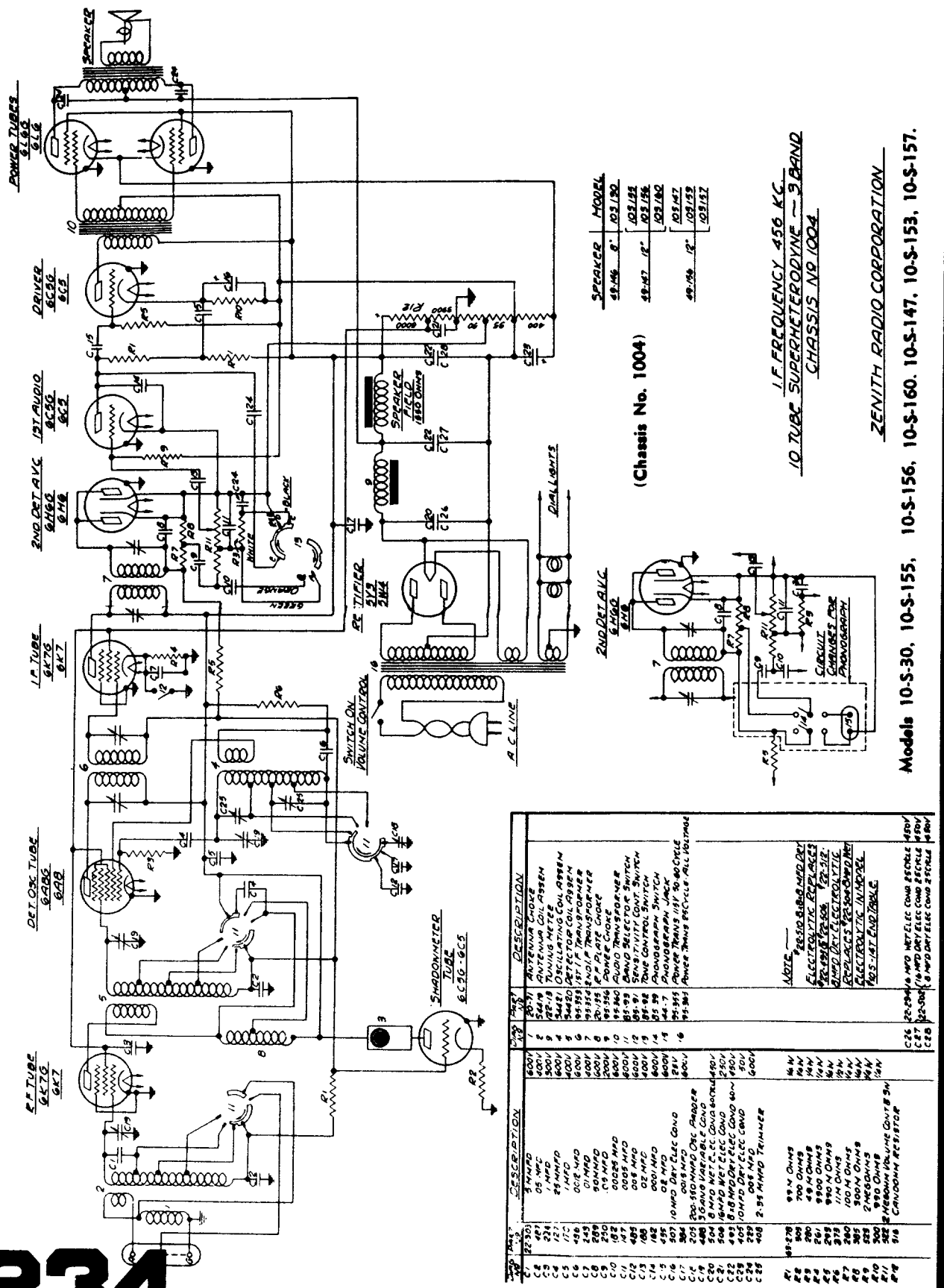

SPEAKER	MODEL
12-146 8"	103-151
	103-156
12-147 12"	103-152
	103-157
12-148 12"	103-153

(Chassis No. 1004)

I.F. FREQUENCY 456 KC.

10 TUBE SUPERHETERODYNE — 3 BAND

CHASSIS No 1004

ZENITH RADIO CORPORATION

Models 10-S-30, 10-S-155, 10-S-156, 10-S-160, 10-S-147, 10-S-153, 10-S-157.

Diag. Ref.	Part No.	Description	Diag. Ref.	Part No.	Description
C1	22-306	3 MMFD	C2	28-11	Antenna Choke
C2	491	.05 MFD	C3	54-19	Antenna Coil Assem
C3	231	1 MFD	C4	122-18	Tuning Meter
C4	231	1 MFD	C5	54-21	Oscillating Coil Assem
C5	170	2 MFD	C6	54-20	Detector Coil Assem
C6	416	.002 MFD	C7	95-193	1st I.F. Transformer
C7	243	.01 MFD	C8	95-194	2nd I.F. Transformer
C8	289	50 MMFD	C9	70-135	R.F. Plate Choke
C9	250	.1 MFD	C10	95-196	Power Choke
C10	182	.0025 MFD	C11	95-160	Audio Transformer
C11	417	.0005 MFD	C12	83-93	Band Selector Switch
C12	485	.005 MFD	C13	83-91	Sensitivity Cont. Switch
C13	188	.02 MFD	C14	83-92	Tone Control Switch
C14	182	.0001 MFD	C15	85-39	Phonograph Switch
C15	455	.05 MFD	C16	44-7	Phonograph Jack
C16	507	10 MFD Dry Elec Cond	C17	95-955	Power Trans 115V 50-60 Cycle
C17	304	.005 MFD	C18	95-303	Power Trans 115V 25 Cycle All Voltage
C18	305	200-150 MMFD Osc Padder			
C19	484	5-30 MMFD Var Elec Cond			
C20	504	8 MFD Wet Elec Cond 450V			
C21	506	16 MFD Wet Elec Cond 250V			
C22	493	8-8-8 MFD Dry Elec Cond 450V			
C23	405	10 MFD Dry Elec Cond 50V			
C24	239	.005 MFD			
C25	408	2-55 MMFD Trimmer			
R1	49-278	99 K Ohms			
R2	303	700 Ohms			
R3	280	48 K Ohms			
R4	281	9900 Ohms			
R5	279	110 K Ohms			
R6	273	110 K Ohms			
R7	240	100 K Ohms			
R8	395	900 K Ohms			
R9	223	2 Megohms			
R10	300	990 Ohms			
R11	322	2 Megohm Volume Cont. & Sw.			
R12	516	Candohm Resistor			

NOTE —
*22-510 8-8-8 MFD Dry Electrolytic Replaces *22-512 10 MFD Dry Electrolytic Replaces *22-504 8 MFD Wet Electrolytic Replaces *22-506 8 MFD Dry Elec Cond 25V

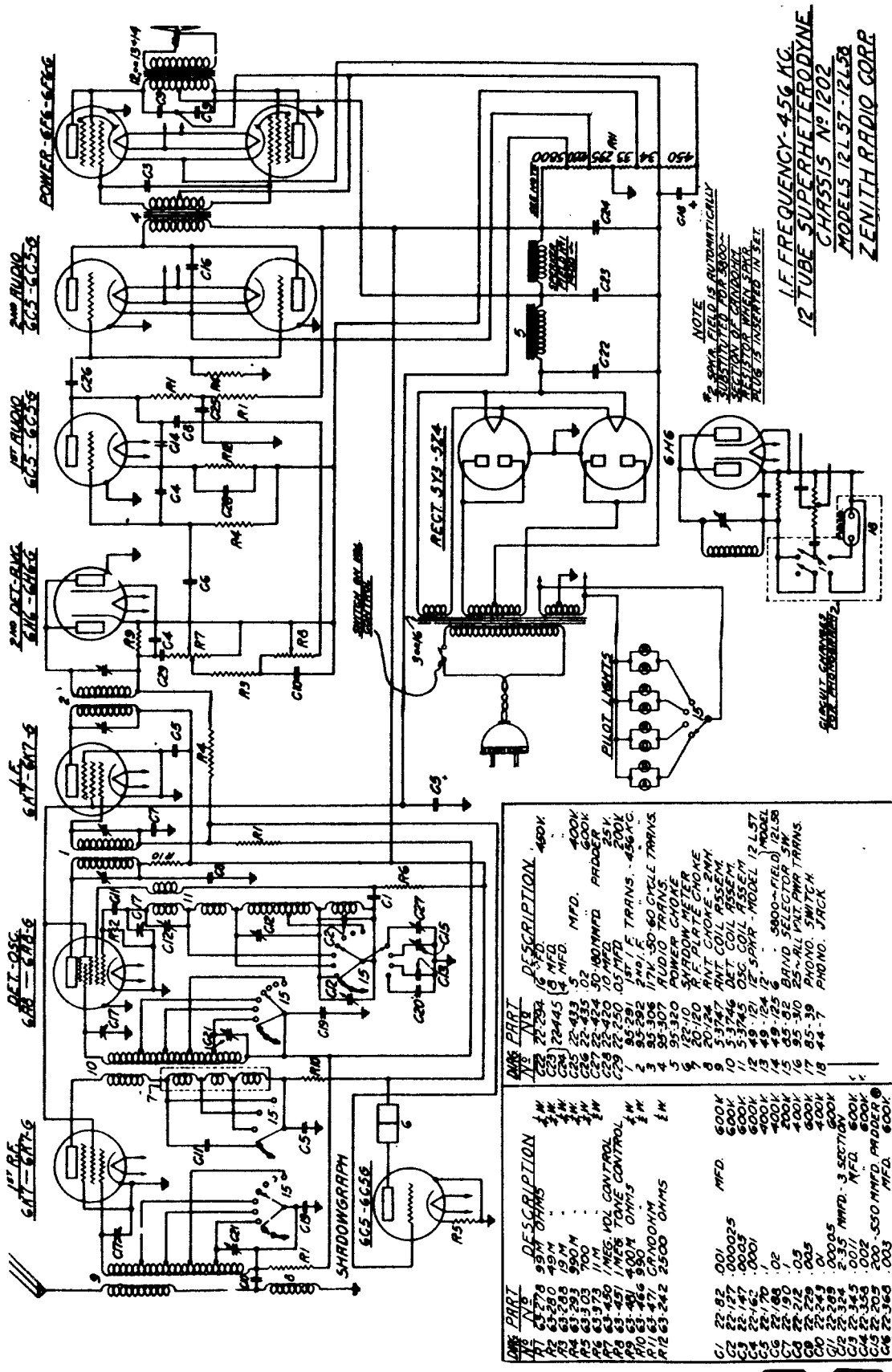

QTY	PART No	DESCRIPTION			
R1	63-278	99M OHMS	½W		
R2	63-280	49M	½W		
R3	63-288	19M	½W		
R4	63-293	990M	½W		
R5	63-303	700	½W		
R6	63-373	11M	½W		
R7	63-450	1 MEG. VOL. CONTROL			
R8	63-451	1 MEG. TONE CONTROL	½W		
R9	63-481	400M OHMS	½W		
R10	63-466	990	½W		
R11	63-471	6 MEGOHM	½W		
R12	63-242	2500 OHMS	½W		
C1	22-82	.001 MFD.	600V.		
C2	22-127	.000025	600V.		
C3	22-147	.0005	600V.		
C4	22-162	.0001	600V.		
C5	22-170	.1	400V.		
C6	22-189	.02	400V.		
C7	22-190	.1	200V.		
C8	22-212	.05	400V.		
C9	22-229	.025	600V.		
C10	22-243	.01	400V.		
C11	22-269	.00005	600V.		
C12	22-324	2.35 MMFD. - 3 SECTION	600V.		
C13	22-345	.0011 MFD.	600V.		
C14	22-353	.002	600V.		
C15	22-203	200-530 MMFD. PADDER			
C16	22-363	.003 MFD.	600V.		
C17	22-409	3 GANG VARIABLE			
C18	22-405	18 MFD.	50V.		
C19	22-410	.003 MFD.	600V.		
C20	22-411	.0023	600V.		
C21	22-418	2.35 MMFD.			

QTY	PART No	DESCRIPTION	
C22	22-234	16 MFD.	450V.
C23	22-234	16 MFD.	
C24	22-445	4 MFD.	
C25	22-433	.5 MFD.	400V.
C26	22-435	.02	600V.
C27	22-424	50-80 MMFD. PADDER	25V.
C28	22-420	10 MFD.	200V.
C29	22-250	.05 MFD.	
1	95-291	1ST I.F. TRANS. - 456 KC.	
2	95-292	2ND I.F. "	
3	95-306	117V. 50-60 CYCLE TRANS.	
4	95-307	AUDIO TRANS.	
5	95-320	POWER CHOKE	
6	122-110	SHADOW METER	
7	20-120	R.F. PLATE CHOKE	
8	20-124	ANT. CHOKE - 2MH.	
9	5-3747	ANT. COIL ASSEM.	
10	5-3746	DET. COIL ASSEM.	
11	5-3745	OSC. COIL ASSEM.	
12	49-121	12" SPKR. - MODEL 12L57	
13	49-124	12" " - 5800~ FIELD 12L58	
14	49-125	6 " "	
15	65-82	BAND SELECTOR SW.	
16	95-310	25~ ALL PUT PWR TRANS.	
17	85-39	PHONO. SWITCH	
18	44-7	PHONO. JACK	

Models 12-S-205, 12-S-232, 12-S-245, 12-S- 265, 12-S-266, 12-S-267, 12-S-268 (1204 Chassis)

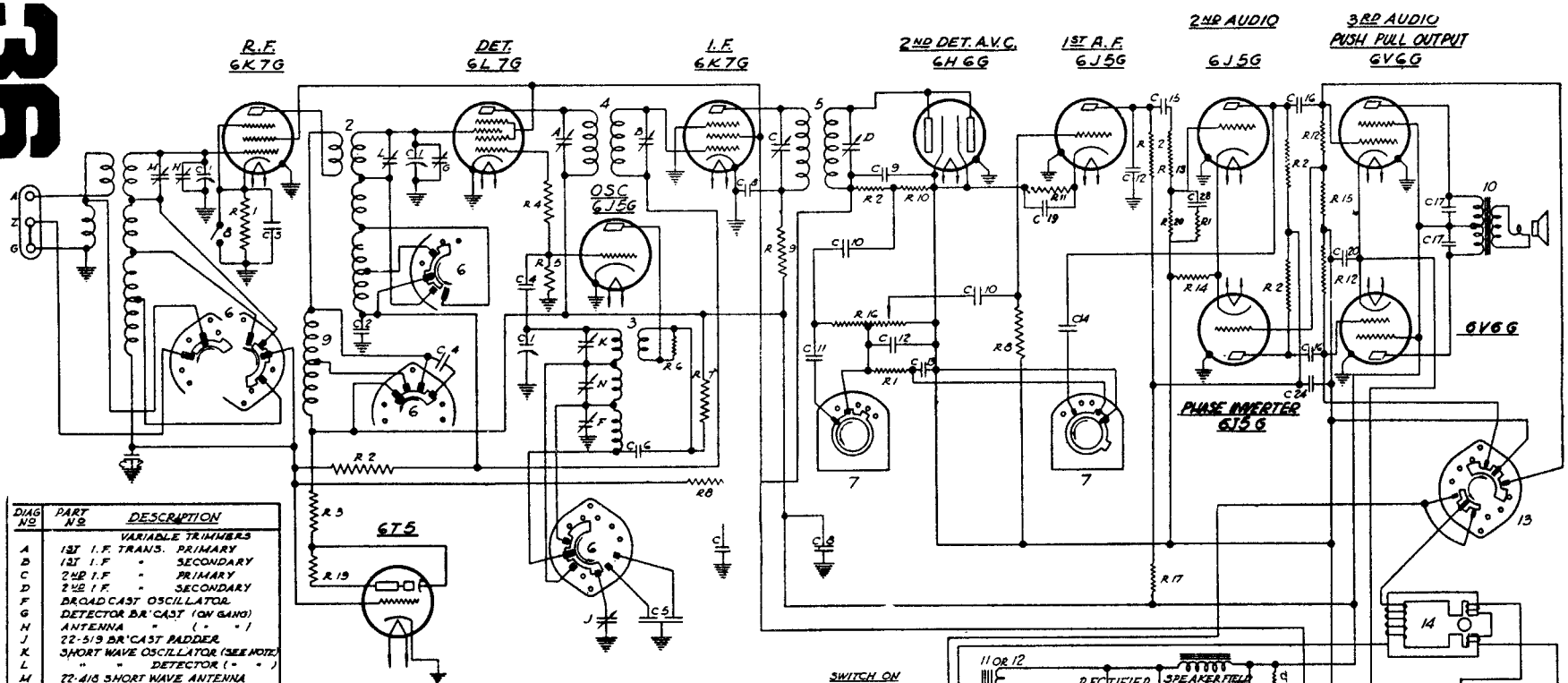

DIAG No	PART No	DESCRIPTION	
		VARIABLE TRIMMERS	
A		1ST I.F. TRANS. PRIMARY	
B		1ST I.F. " SECONDARY	
C		2ND I.F. " PRIMARY	
D		2ND I.F. " SECONDARY	
F		BROAD CAST OSCILLATOR	
G		DETECTOR B.R. CAST (ON GANG)	
H		ANTENNA " (" ")	
J		22-519 BR'CAST PADDER	
K		SHORT WAVE OSCILLATOR (SEE NOTE)	
L		" " DETECTOR (" ")	
M		22-418 SHORT WAVE ANTENNA	
N		POLICE BAND OSCILLATOR (SEE NOTE)	
		NOTE:- TRIMMERS F, K, L & N MOUNTED ON BAKELITE STRIP PART # 22-549	
C1	22-548	3 GANG VARIABLE	
C2	487	.05 MFD.	400 V.
C3	250	.05 MFD.	200 V.
C4	127	.25 MMFD.	600 V.
C5	558	DUAL FIXED PADDER	
C6	558	.002 MFD.	600 V.
C7	170	.1 MFD.	400 V.
C8	212	.05 MFD.	400 V.
C9	162	.0001 MFD.	600 V.
C10	527	.02 MFD.	200 V.
C11	182	.00025 MFD.	600 V.
C12	147	.0005 MFD.	600 V.
C13	561	.004 MFD.	400 V.
C14	196	.01 MFD.	600 V.
C15	435	.02 MFD.	600 V.
C16	171	.05 MFD.	600 V.
C17	229	.005 MFD.	600 V.
C18	525	.005 MFD.	1000 V.
C19	572	10 MFD ELECTROLYTIC	25 V.
C20		10 " "	25 V.
C21		10 " "	25 V.

DIAG No	PART No	DESCRIPTION	
C24	22-575	4 MFD. ELECTROLYTIC	350 V.
C25		8 " "	200 V.
C26	566	12 MFD. "	450 V.
C27		20 " "	450 V.
C28	22-326	.003 MFD	400 V.
R1	63-593	47 M. OHM	1/4 W. ± 20%
R2	593	100 M "	1/4 W. ± 20%
R3	609	22 M "	1/2 W. ± 20%
R4	561	470 "	1/4 W. ± 20%
R5	645	27 M "	1/4 W. ± 10%
R6	586	3300 "	1/4 W. ± 20%
R7	682	22 M "	2 W. ± 20%
R8	271	1 MEGOHM	1/4 W. ± 20%
R9	605	1000 OHM	1/2 W. ± 20%
R10	596	330 M "	1/4 W. ± 20%
R11	282	2200 "	1/4 W. ± 10%
R12	260	100 M "	1/4 W. ± 10%
R13	653	150 M "	1/4 W. ± 10%
R14	439	2700 "	1/4 W. ± 10%
R15	639	6800 "	1/4 W. ± 10%
R16	568	2 MEGOHM VOLUME CONTROL	

DIAG No	PART No	DESCRIPTION
R17	63-680	10 M OHM 1 W. ± 20%
R18	809	4 SECTION CANDOHM
R19		1 MEGOHM - MOUNTED IN TUBE SOCKET
R20	657	330 M OHM 1/4 W ± 10%
1	5-5265	ANTENNA COIL & SHIELD ASSEM
2	5-5266	DET COIL & SHIELD ASSEM
3	5-5019	OSC COIL & SHIELD ASSEM
4	95-416	1ST I.F. TRANS.
5	417	2ND I.F. TRANS.
6	85-103	BAND SELECTOR SWITCH
7	85-108	TONE CONTROL "
8	85-109	SENSITIVITY "
9	20-135	R.F. CHOKE
10		SPEAKER TRANS.
11	95-421	POWER TRANS 117V 50-60 CYCLE
12	95-455	" " ALL VOLTAGE 25 CYCLE
13	85-170	MOTOR CONTROL SWITCH
14	14"-51	MOTOR

MODEL	SP'KR PART No	SIZE
12S-205	49-185	12
12S-232	49-183	8
12S-235	49-184	12
12S-265	49-185	12
12S-266	49-185	12
12S-267	49-185	12
12S-268	49-185	12

I.F. FREQUENCY 456 K.C.
12 TUBE SUPERHETERODYNE
3 BAND
CHASSIS NO. 1204
ZENITH RADIO CORP.

COMPILED BY M. N. BEITMAN, SUPREME PUBLICATIONS

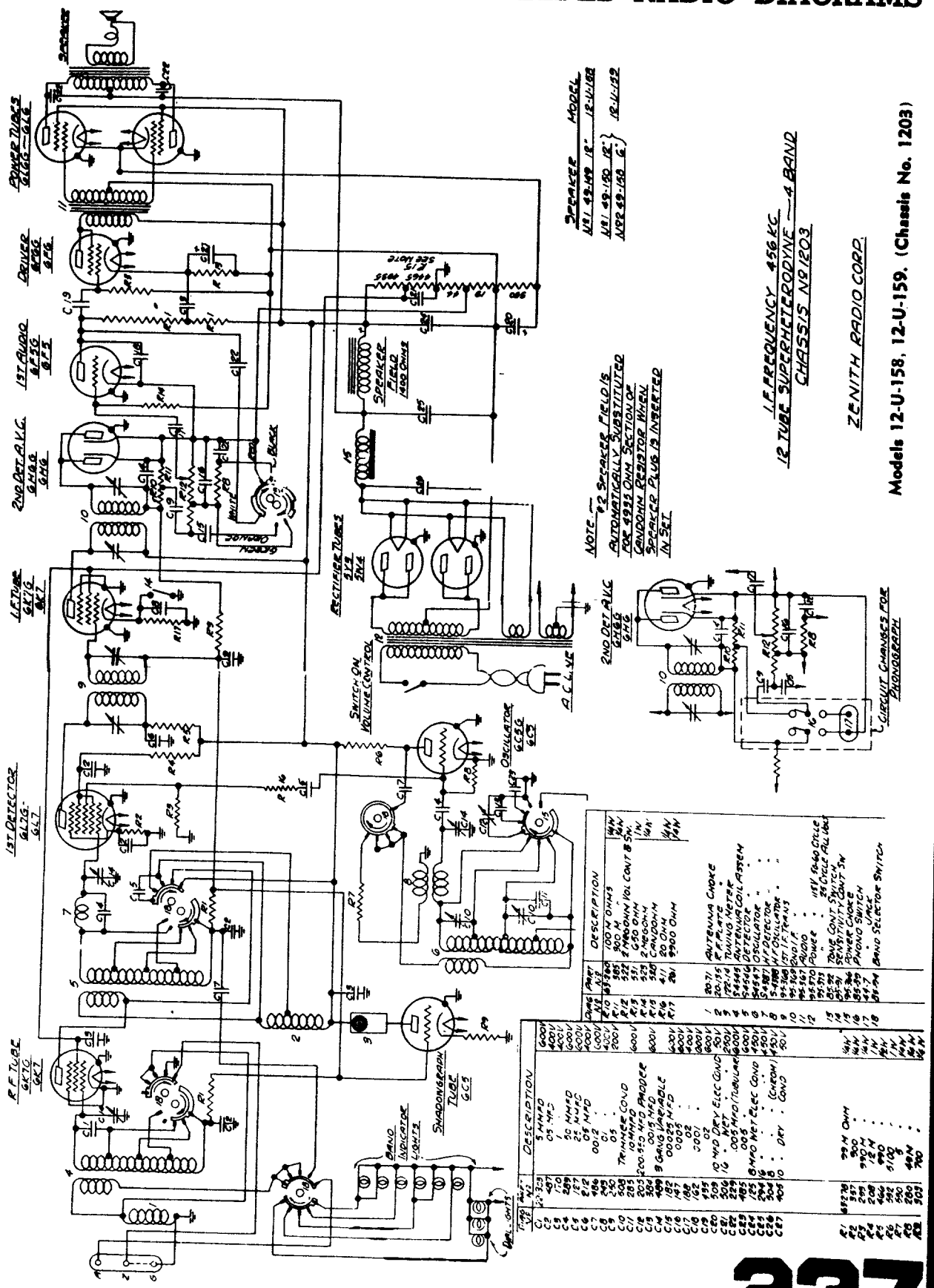
SPEAKER
POWER TUBES 6L6G—6L6
DRIVER 6F6G 6F6
1ST AUDIO 6F5G 6F5
2ND DET. A.V.C. 6H6G 6H6
I.F. TUBE 6K7G 6K7
1ST DETECTOR 6L7G-6L7
R.F. TUBE 6K7G 6K7
SPEAKER FIELD 1400 OHMS
RECTIFIER TUBES 5Y3 5Y4
SWITCH ON VOLUME CONTROL
A.C. 4.5E
OSCILLATOR 6C5G 6C5
SHADOWGRAPH TUBE 6E5
BAND INDICATOR LIGHTS
SPEAKER MODEL
NOTE — #2 SPEAKER FIELD IS AUTOMATICALLY SUBSTITUTED FOR 4955 OHM SECTION OF CANADIAN RESISTOR WHEN SPEAKER PLUG IS INSERTED IN SET.
I.F. FREQUENCY 456 KC
12 TUBE SUPERHETERODYNE — 4 BAND
CHASSIS No 1203
ZENITH RADIO CORP.
Models 12-U-158, 12-U-159. (Chassis No. 1203)
CIRCUIT CHANGES FOR PHONOGRAPH

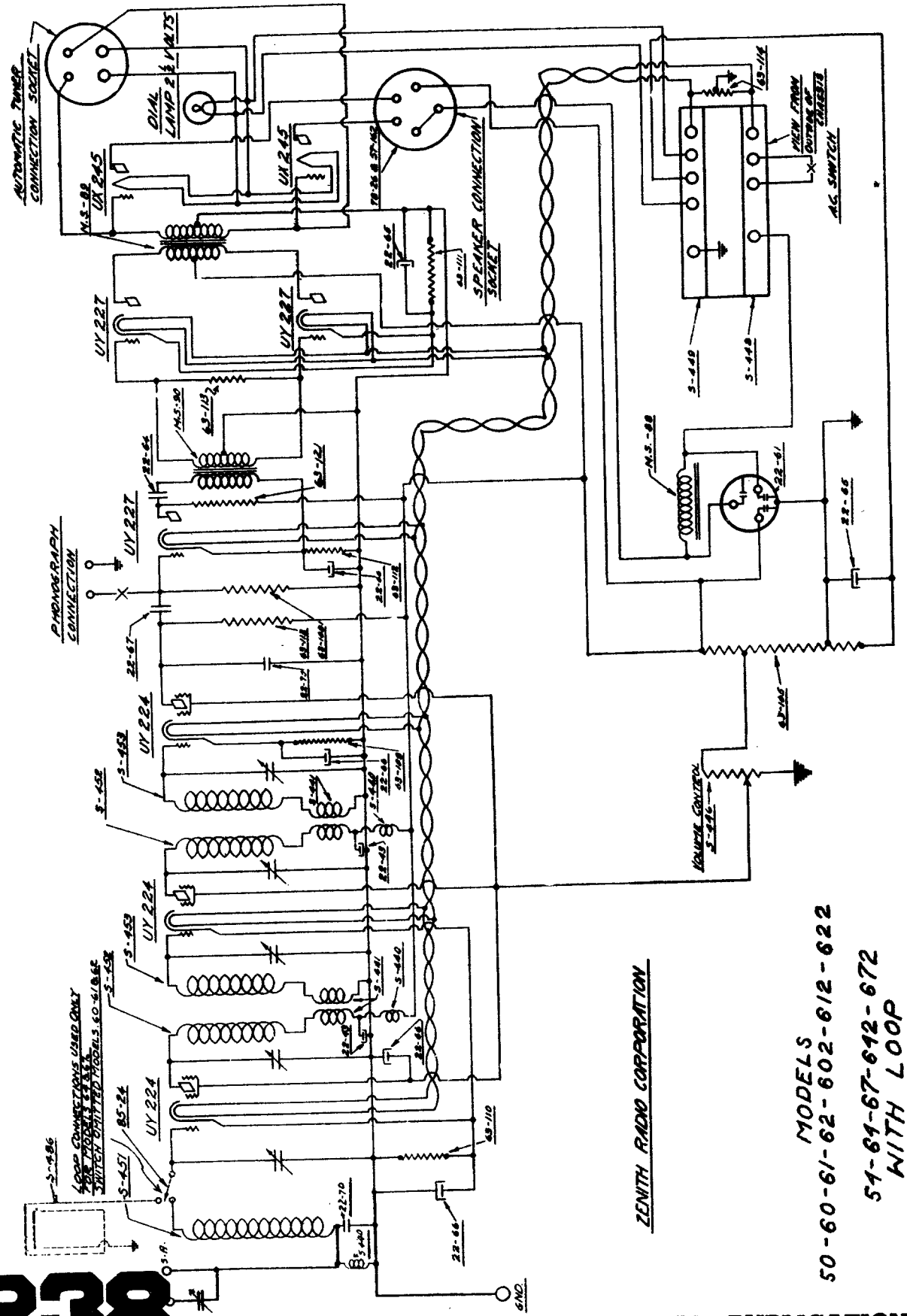
AUTOMATIC TUNER CONNECTION SOCKET
DIAL LAMP 2½ VOLTS
UX 245
UX 245
UY 227
UY 227
UY 227
UY 224
UY 224
UY 224
SPEAKER CONNECTION SOCKET
PHONOGRAPH CONNECTION
VIEW FROM OUTSIDE OF CHASSIS
A.C. SWITCH
VOLUME CONTROL
GND.
ZENITH RADIO CORPORATION
MODELS
50-60-61-62-602-612-622
54-64-67-642-672
WITH LOOP

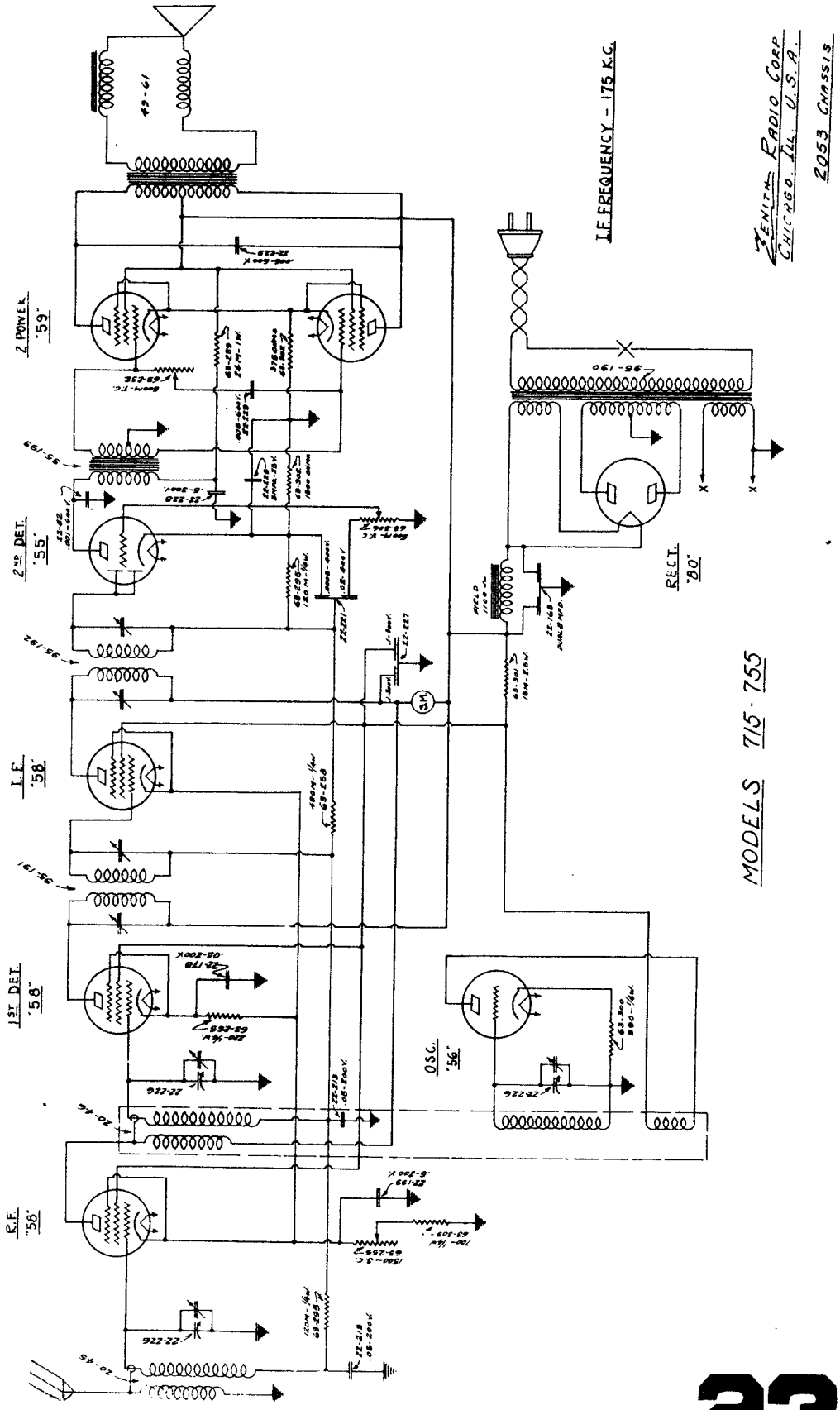
I.F. FREQUENCY - 175 K.C.
ZENITH RADIO CORP.
CHICAGO, ILL. U.S.A.
2053 CHASSIS
MODELS 715 · 755
2ND POWER
'59'
2ND DET.
'55'
I.F.
'58'
1ST DET.
'58'
R.F.
'58'
OSC.
'56'
RECT.
'80'

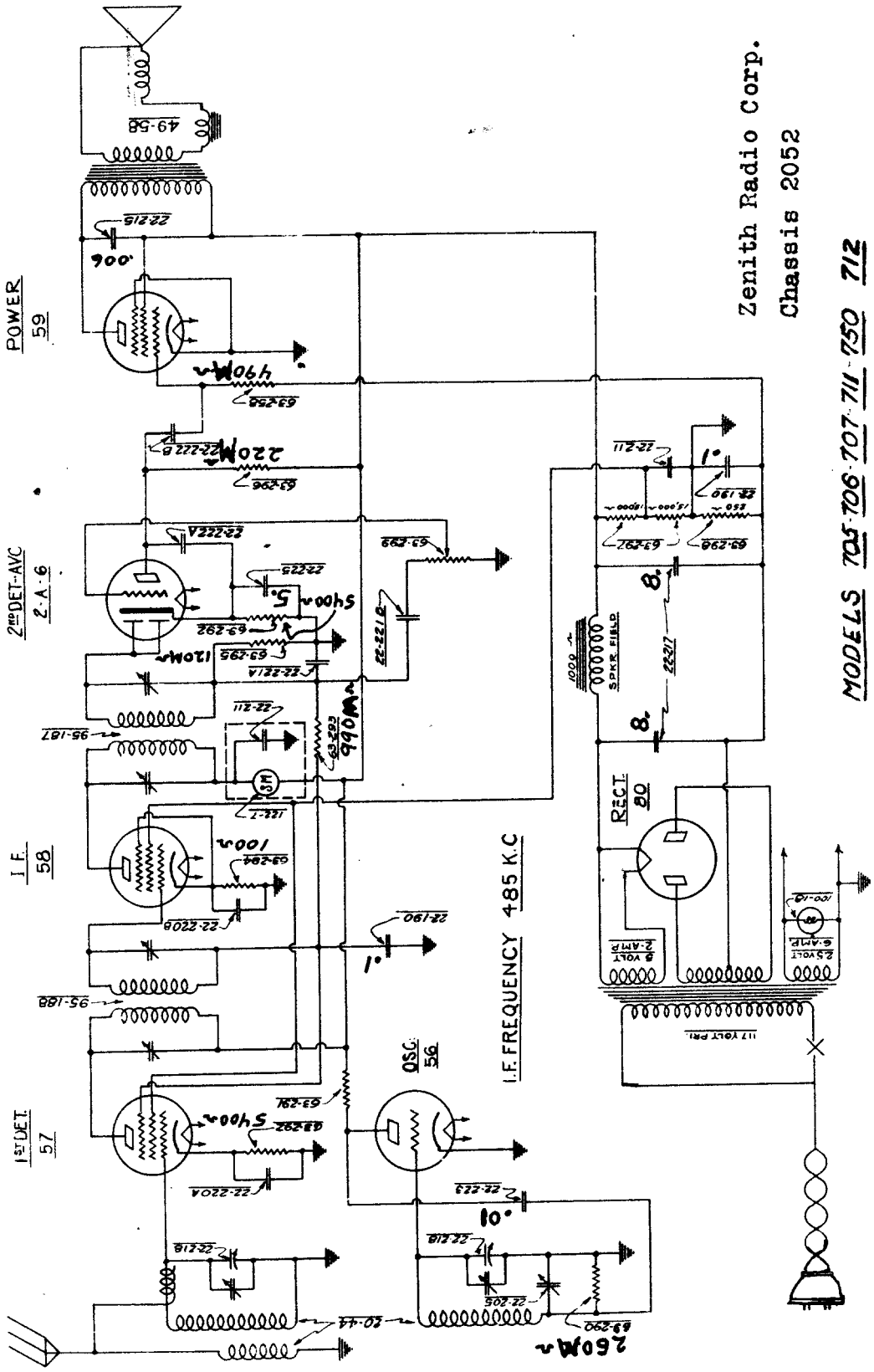
Zenith Radio Corp.
Chassis 2052
MODELS 705-706-707-711-750 712
POWER 59
2ND DET-AVC 2-A-6
I.F. 58
1ST DET. 57
OSC. 56
RECT. 80
I.F. FREQUENCY 485 K.C
SPKR. FIELD
117 VOLT PRI.
6 VOLT 2 AMP
2.5 VOLT 6 AMP
49-58
22-215
.006
490M
63-258
220M
22-222B
63-296
22-222A
63-293
22-225
5.
5400
63-292
63-295
120M
22-221A
22-211
95-187
63-293
990M
122-7
63-294
100
22-220B
22-190
.1
95-188
63-291
5400
22-220A
22-223
.01
22-218
22-205
20-44
63-290
260M
22-211
.1
22-190
63-292
63-296
8.
22-217
8.
1000
100-16

NEW TECHNICAL RADIO BOOKS

SEE THESE HELPFUL MANUALS AT YOUR RADIO JOBBER OR ORDER FOR EXAMINATION

Most - Often - Needed

RADIO DIAGRAMS

and Servicing Information

4 OUT OF 5 CIRCUITS YOU NEED

In these easy-to-use complete manuals you have all the diagrams you really need. Over 80% of the sets you service every day are included. Use these important, hint-giving, trouble-shooting circuits to make your service work faster and easier.

The manuals are large, 8½ x 11 inches, clearly printed on good quality paper. In most cases include fully detailed schematic diagram, parts list, alignment data, and service hints. Every popular diagram is included.

1942, Volume 5, 204 pages....
1941, Volume 4, 192 pages....
1940, Volume 3, 208 pages....
1939, Volume 2, 192 pages.... **$2.00 EACH**

1926-38, Volume 1, 244 pages, alignment, hints, parts lists.. **$2.50**

GENERAL ELECTRIC MANUAL

This 64-page complete manual of the most-popular GE sets is something you must have. The entire manual of these "often-needed" important circuits is yours for less than the cost of a single diagram. Size 5½ x 8½ inches. Net Only **50c**

STEWART-WARNER MANUAL

This handy diagram manual contains diagrams, service notes, alignment data, for popular Stewart-Warner radios of all periods. Get this inexpensive book and be ready to service your next set of this important make. Size: 5½ x 11 inches. Price postpaid..... **50c**

ARVIN MANUAL

The most-often-needed diagrams of Noblitt-Sparks (Arvin) radios are included in this manual. Service these popular sets with confidence and skill, using this low priced radio publication. Size: 5½ by 11 in..... **50c**

MOTOROLA SERVICE MANUAL

This up-to-the-minute manual will tell you how to repair MOTOROLA auto radios. Includes detail schematics, service notes, alignment data, and parts lists for all of the 72 models made to 1941. Prepared with the help of Galvin Mfg. Co. engineers. This large 8½ x 11 inch, 96 page manual is priced postpaid at only..... **$1.50**

Simplified Radio Servicing by COMPARISON Method

A NEW DEVELOPMENT

You will be able to repair radios in minutes instead of hours. Revolutionary different **Comparison** technique permits you to do expert work on all radio sets. Most repairs can be made without test equipment or with only a volt-ohm-meter. Many simple point-to-point, cross-reference circuit suggestions locate the faults instantly. Plan protected by copyright.

FOR BEGINNERS AND EXPERTS

This new, simplified servicing technique is presented in handy manual form 8½ x 11 inches, 112 pages. Covers every radio set type—new and old models. Over 1,000 practical service hints. 16 large, trouble-shooting blueprints. Charts for circuit test analysis. 114 simplified tests using only a 5c resistor. Developed by M. N. Beitman. Price Postpaid, only..... **$1.50**

Practical Radio Mathematics

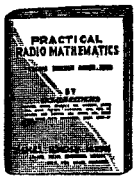

Introduces and explains the use of arithmetic and elementary algebra in connection with units, color code, meter scales, Ohm's Law, alternating currents, ohmmeter testing, wattage rating, series and parallel connections, capacity, inductance, mixed circuits, vacuum tubes, curves, the decibel, etc., and has numerous examples. Plainly written and easy to understand **25c**

TELEVISION FACTS

This book defines and explains every term and part used in television transmitting and receiving equipment. The more important terms are described in greater detail. You will find the TELEVISION CYCLOPEDIA Section an excellent introduction to television and a great aid in understanding more technical articles and books. Included are many photographs and charts to assist you. Every radio serviceman, amateur, and technician must have this book to understand television. 64 fact-packed pages, well illustrated. Price only **40c**

HOW TO REPAIR REFRIGERATORS

This new practical book will tell you how to repair and adjust all domestic refrigerators. The old refrigerators in use must be repaired during the war. Get into this profitable field. Complete manual **40c**

HOW TO MODERNIZE RADIOS

You can learn quickly to modernize all sets. Cash in by improving audio circuits, modernizing cabinets, adding features usually found on late model sets. Practical job-sheets with schematics and photographs make the work easy. You are told how to obtain modernization work, what to charge, and how to complete the job quickly and efficiently. Large size, 8½x11 in. manual is priced at only..... **$1.00**

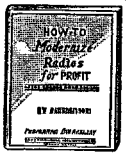

SERVICE NOTES *on*

RECORD PLAYERS
AUTOMATIC CHANGERS
WIRELESS UNITS
AND HOME RECORDERS

Just what you need to repair quickly and correctly thousands of automatic record changers, manual units, pickups, wireless oscillators, recorders, and combinations. Hundreds of mechanical and electrical diagrams. Instructions for adjustments and repairs. The most popular units of all makes included. 132 large pages, 8½ x 11 inches. Net Price **$1.50**

LEARN RADIO

Home-Study Radio Course

ONLY $2.50 COMPLETE

AMAZING BARGAIN OFFER

Here is your chance to get your radio training almost free. These simplified, well illustrated, interesting lessons cover every phase of radio work. You will find the training remarkably easy to grasp and use.

TRAIN AT HOME FOR A RADIO JOB

This home-study manual has helped others like you to secure high pay jobs in radio factories, service shops, War Industries, Navy and Army. These money-saving lessons will give you all the essential training needed. Includes extra information on recent radio developments. You may examine the complete course-manual, containing all the lessons and review questions, in your own home without any risk.

FOR BRUSH-UP AND REVIEW

Learn new speed-tricks of radio fault finding, case histories of common troubles, servicing short-cuts, extra profit ideas. Many large lessons on the use of regular test equipment, explanation of signal tracing, television to the minute, recording dope. With this information you will save enough time on a single radio job to pay the special $2.50 price for the complete course of the money-making lessons. Many active servicemen used this reduced-price radio training for brush-up and study of new servicing methods.

NEW EDITION REPRINTED 1943

Reprinted in 1943 with information on signal-tracing, television, visual alignment, P.A., photo-cells, etc. All about AVC, how to use an oscilloscope, what is feedback, resonance action, and every other fact you must know to be more expert in your work. Order the course on a trial basis. Net price, only..... **$2.50**

HOW TO ORDER BOOKS

Mark in the coupon the manuals you want. Then take the coupon to your radio jobber, or send the coupon to the publisher and receive the manuals selected, by prepaid parcel post.

SEE YOUR JOBBER OR SEND COUPON

SUPREME PUBLICATIONS
328 S. Jefferson St., Chicago, Ill.

I want the manuals listed below. I must be satisfied or you will refund my money.

_____

_____

_____

☐ I am enclosing $_____ send posptaid. ☐ Send C.O.D.

NAME: _____

ADDRESS: _____

(You may send a letter instead of coupon.)

Supreme Publications

PUBLISHERS OF RADIO BOOKS, MANUALS, AND DIAGRAMS

328 South Jefferson Street Chicago, Illinois